CITY OF BOULDER
PLANNING BOARD MEETING AGENDA
DATE: December 3, 2015
TIME: 6 p.m.
PLACE: 1777 Broadway, Council Chambers

---

1. CALL TO ORDER

2. APPROVAL OF MINUTES
The October 29, 2015 and November 19, 2015 minutes are scheduled for review.

3. PUBLIC PARTICIPATION

4. DISCUSSION OF DISPOSITIONS, PLANNING BOARD CALL-UPS/CONTINUATIONS

A. Informational Item: ORDINANCE amending subsection 9-12-2(b), "Prohibition of Sale Before Plan Approval," B.R.C. 1981 to allow the owner of the property at 2180 Violet Ave. to sell a portion of the unplatted parcel to Habitat for Humanity of Boulder Valley, Inc. for the purposes of developing affordable housing. The subject property is zoned Residential - Medium 2 (RM-2) and Residential - Low 1 (RL-1). Case number LUR2015-00110.

5. PUBLIC HEARING ITEMS

A. AGENDA TITLE: Public hearing and consideration of a Minor Amendment to an Approved Site Plan (LUR2015-00092) to amend the approved Dakota Ridge North design standards to allow fences up to 60 inches (5 feet) in height that back onto an alley to be built to within 18 inches of the alley with a maximum of 42 inches of solid fence and a minimum of 18 inches of lattice above. The Dakota Ridge North PUD lies within the RL-2 (Residential – Low 2) and RM-1 (Residential – Medium 1) zoning districts.

Applicant: John McCarthy for the Dakota Ridge North HOA

B. AGENDA TITLE: Public hearing and consideration of an Amendment to Approved Site Plans to amend the approved fencing standards for the TrailCrossing at Lee Hill residential development located at 820 Lee Hill Drive to allow privacy fences in specific areas. The project site is zoned Residential - Low 2 (RL-2). Case No. LUR2015-00094.

Applicant: Scott Chomiak on Behalf of Trail Crossing at Lee Hill Homeowner Association
Owner: KUH-Lee Hill, LLC (Lots 17, 18, 24, 25 and 31 and Outlot A), Jeremy Epstein and Susan Strife (Lot 1)

6. MATTERS FROM THE PLANNING BOARD, PLANNING DIRECTOR, AND CITY ATTORNEY

A. Letter to Council Discussion

7. DEBRIEF MEETING/CALENDAR CHECK

8. ADJOURNMENT

CITY OF BOULDER PLANNING BOARD
MEETING GUIDELINES

CALL TO ORDER
The Board must have a quorum (four members present) before the meeting can be called to order.

AGENDA
The Board may rearrange the order of the Agenda or delete items for good cause. The Board may not add items requiring public notice.

PUBLIC PARTICIPATION
The public is welcome to address the Board (3 minutes* maximum per speaker) during the Public Participation portion of the meeting regarding any item not scheduled for a public hearing. The only items scheduled for a public hearing are those listed under the category PUBLIC HEARING ITEMS on the Agenda. Any exhibits introduced into the record at this time must be provided in quantities of ten (10) to the Board Secretary for distribution to the Board and admission into the record.

DISCUSSION AND STUDY SESSION ITEMS
Discussion and study session items do not require motions of approval or recommendation.

PUBLIC HEARING ITEMS
A Public Hearing item requires a motion and a vote. The general format for hearing of an action item is as follows:

1. Presentations

a. Staff presentation (10 minutes maximum*)
b. Applicant presentation (10 minute maximum*). Any exhibits introduced into the record at this time must be provided in quantities of ten (10) to the Board Secretary for distribution to the Board and admission into the record.
c. Planning Board questioning of staff or applicant for information only.

2. Public Hearing

Each speaker will be allowed an oral presentation (3 minutes maximum*). All speakers wishing to pool their time must be present, and time allotted will be determined by the Chair. No pooled time presentation will be permitted to exceed ten minutes total.

- Time remaining is presented by a Green blinking light that means one minute remains, a Yellow light means 30 seconds remain, and a Red light and beep means time has expired.
- Speakers should introduce themselves, giving name and address. If officially representing a group, homeowners' association, etc., please state that for the record as well.
- Speakers are requested not to repeat items addressed by previous speakers other than to express points of agreement or disagreement. Refrain from reading long documents, and summarize comments wherever possible. Long documents may be submitted and will become a part of the official record.
- Speakers should address the Land Use Regulation criteria and, if possible, reference the rules that the Board uses to decide a case.
- Any exhibits introduced into the record at the hearing must be provided in quantities of ten (10) to the Secretary for distribution to the Board and admission into the record.
- Citizens can send a letter to the Planning staff at 1739 Broadway, Boulder, CO 80302, two weeks before the Planning Board meeting, to be included in the Board packet. Correspondence received after this time will be distributed at the Board meeting.

3. Board Action

d. Board motion. Motions may take any number of forms. With regard to a specific development proposal, the motion generally is to either approve the project (with or without conditions), to deny it, or to continue the matter to a date certain (generally in order to obtain additional information).
e. Board discussion. This is undertaken entirely by members of the Board. The applicant, members of the public or city staff participate only if called upon by the Chair.
f. Board action (the vote). An affirmative vote of at least four members of the Board is required to pass a motion approving any action. If the vote taken results in either a tie, a vote of three to two, or a vote of three to one in favor of approval, the applicant shall be automatically allowed a rehearing upon requesting the same in writing within seven days.

MATTERS FROM THE PLANNING BOARD, DIRECTOR, AND CITY ATTORNEY
Any Planning Board member, the Planning Director, or the City Attorney may introduce before the Board matters which are not included in the formal agenda.

ADJOURNMENT
The Board's goal is that regular meetings adjourn by 10:30 p.m. and that study sessions adjourn by 10:00 p.m. Agenda items will not be commenced after 10:00 p.m. except by majority vote of Board members present.

*The Chair may lengthen or shorten the time allotted as appropriate. If the allotted time is exceeded, the Chair may request that the speaker conclude his or her comments.

CITY OF BOULDER
PLANNING BOARD ACTION MINUTES
October 29, 2015
1777 Broadway, Council Chambers

A permanent set of these minutes and a tape recording (maintained for a period of seven years) are retained in Central Records (telephone: 303-441-3043). Minutes and streaming audio are also available on the web at: http://www.bouldercolorado.gov/

PLANNING BOARD MEMBERS PRESENT:
Aaron Brockett, Chair
Bryan Bowen
John Putnam
John Gerstle
Leonard May
Liz Payton
Crystal Gray

PLANNING BOARD MEMBERS ABSENT:

STAFF PRESENT:
Karl Guiler, Senior Planner
Sam Assefa, Senior Urban Designer
Susan Richstone, Deputy Director of Planning, Housing & Sustainability
Edward Stafford, Development Review Manager for Public Works
Hella Pannewig, Assistant City Attorney
Cindy Spence, Administrative Specialist III
Lauren Holm, Administrative Specialist II

1. **CALL TO ORDER**

Chair, **A. Brockett**, declared a quorum at 6:07 p.m. and the following business was conducted.

2. **APPROVAL OF MINUTES**

On a motion by **B. Bowen** and seconded by **J. Gerstle** the Planning Board voted 7-0 to approve the October 15, 2015 minutes as amended.

3. **PUBLIC PARTICIPATION**

No one spoke.

DRAFT

4. **DISCUSSION OF DISPOSITIONS, PLANNING BOARD CALL-UPS/CONTINUATIONS**

5. **PUBLIC HEARING ITEMS**
   A. Public hearing to receive feedback on the draft pilot Form-Based Code (FBC) for the Boulder Junction Phase I area and the potential review process.

Staff Presentation:
K. Guiler and **Leslie Oberholtzer**, **with Coda Metrics**, **5412 N. Clark St., Suite 209, Chicago, IL**, the consultant, presented the item to the Board.

Public Hearing:
1. **Catherine Hunziker, 3100 Carbon Pl. #103,** spoke in support of the project.

Board Questions:
K. Guiler, S. Assefa and **L. Oberholtzer** answered questions from the Board.

Board Comments:
<u>FBC Review Process</u>: What type of review process should be used to implement the FBC? What should the level of staff and board discretion be based on the FBC's content? Three Types: 1) No call/Staff level review; 2) No call/Staff level review with mandatory DAB review; 3) Call Up based on specific areas of concern/discretion.

- **C. Gray** stated that she would like to have the opportunity to call up items. It would be helpful to have the option to call up the item to see if the project meets the FBC requirements.

    - **L. Oberholtzer** stated that it would be possible to do a call up, but the key would be to have very specific regulations defined in the Code and in place. If not, then changes would not be able to be done unless the Code was changed.

- **L. Payton** stated that her concern lies with the accountability on projects. Currently, the public views that the accountability lies with City Council and Planning Board. But with the proposed FBC, there would be no call up (under options #1 and #2). She questioned who would be accountable if the public does not like the results. In addition, she had questions regarding the Minor Modifications process and the accumulation of many Minor Modifications. She stated that she supports Victor Dover's recommendation that if a project is above three stories, for example, then the Planning Board could review or call up the project.

    - **L. Oberholtzer** stated that with FBC, the Code can be modified rather than trying to have a project meet the criteria during the Site Review process.

- **B. Bowen** stated that in regards to updates on FBC, he would prefer to see a formalized review of the FBC process and placed within the document. In terms of the review process presented, he stated that option #1 is reasonable; however option #2 makes more

DRAFT

sense. He suggested a process in which people could opt out of the FBC process and into a discretionary review process. Perhaps make something that would be more adaptable over time for the rest of the city.

  - **K. Guiler** stated that they did consider giving people the choice of a FBC review or more of a Site Review process. They moved away from that because it might create too much inconsistency between buildings.

  - **H. Pannewig** added that the current FBC is **s**upposed to be a pilot and the concern would be that the pilot could not be tested if people choose not to do it.

- **B. Bowen** stated that in regards to the pilot phase for a distinct area, that perhaps giving people the option to opt out for the future, especially if it was adopted for the entire city. In regards to Use Review, during Phase I, the Use Review tables would still be in place, however he questioned if after the adoption of the FBC, would the Use Tables still be in place or relaxed.

  - **K. Guiler** stated that they had not intended to add uses into the FBC. Uses were not seen as a problem that needed to be addressed. However, if in the long term, FBC is found to be successful (better than Site Review), they could integrate them into the Code and perhaps replace parts of Code. At this time FBC is a pilot.

  - **L. Oberholtzer** stated that FBC would not ignore uses. FBC has categorized the uses. Most FBC incorporates uses and a set of zoning districts with use information included.

- **B. Bowen** stated that the FBC would help to discuss the arrangement of uses on the site which would be valuable. The current Use Table could be improved on. He stated that a neighborhood impact, on a case by case basis, review would be needed. He stated that he would support the #2 option.

- **A. Brockett** stated that if FBC would be adopted, people would not be allowed to opt out. He questioned how FBC would impact those projects that have already begun the process (Site Review). He stated that in regards to the review process, the goal would be to not have endless discretionary reviews. Given that FBC is a pilot, and a limited number of parcels involved, it would be reasonable to have feedback or consultation with City Council and Planning Board. He stated that the best path would be between options #1 and #2. He stated that it is important to have governing bodies involved in the public process. He stated that not just a call up would be needed, but a report for feedback would be needed to explain what worked and what did not.

- **L. May** stated that he would be in support of option #3 with triggers such as projects that are over three stories with a call up option. Where significant impact on a site would be present, he would like to see a call up option.

DRAFT

- **J. Gerstle** stated that he would be interested in maintaining input on designs and sites yet to be developed, and he thought that the Planning Board should have the ability to call up those sites. He stated that option #3 seems appropriate. He stated that with options #1 or #2, the Planning Board would lose the ability to deal with those issues. Planning Board's history of restraint and moderation should be considered with respect to call ups. Planning Board has shown restraint. Option #3 would retain the call up option but would ensure that it is not abused.

- **A. Brockett** stated that he hopes the FBC would be written to be prescriptive.

- **J. Putnam** stated that if the city would use a FBC, then the city would need to provide the room for it to be a real FBC. If the city were to follow the FBC prescriptions, then FBC would work. He stated that he would support between options #1 and #2. He is not sure if he would have Planning Board and City Council involved in the decision making role, but in a feedback role. He would recommend regular informational items to Planning Board and City Council to provide feedback, but it would not be an approval or veto. He suggested that the city should allow the FBC to move forward but observe the outcomes. He stated that he is confused regarding the relationship between modifications to buildings and modifications to already approved developments. A provision should be in place in which the principles should apply. Should not have something in place that would be radically different than what is attempting to be accomplished with the FBC when trying deal with consistency. In regards to the alteration piece, he questioned how that would fit within the FBC. He stated that any major design deviations should go to Planning Board and City Council or at least the ability to call up. In addition, regarding efficient sustainable and adaptable buildings, the FBC is mimicking the language in the current Site Review criteria; however it mimics criteria that are currently not working in Site Review.

- **C. Gray** agreed with **J. Putnam** regarding the need for an evaluation of the FBC (i.e. 5 years) and suggested putting it on the schedule. She questioned if more staff with a design orientation to implement the FBC would be needed. She stated it would be helpful to have an evaluation of current projects in order to see how they would have worked out differently or perhaps the same. Finally, in regards to community benefit, specifically affordable housing and other sustainability issues, she asked how these items would be woven into FBC.

    - **S. Richstone** stated that the city is looking at adopting a community benefits program for affordable housing. If this would be adopted, there may be several sections of the FBC that would need to be reviewed to identify if in conflict with the Code. In regards to the FBC pilot, it would be an idea of understanding the frustrations with the current structure of the Code. She explained that the idea of piloting the Code would be to try a different approach to the Code. She explained that it may lead to how we comprehensively restructure the Code. In addition she stated that since it would be a pilot, we would want to make sure that we would be learning from it and to be prepared to be flexible.

DRAFT

- **C. Gray** stated that since this would be a pilot, it would take away the anxiety of the FBC being perfect. In addition, she stated that historic resources would need to be expanded.

    - **S. Assefa** explained that as the FBC expanded, it would be applied according to very site specific conditions and areas. He stated that some aspects of the FBC might be very common to spread city-wide, but it could be written to be very specific to unique areas.

- **L. May** stated that it would seem appropriate to use a similar trigger for call up processes. For this FBC pilot, since very large projects would be involved, it would be a learning experience for the Board if a project were to be called up.

- **A. Brockett** stated the pilot nature would be unique. He stated that it would make sense to have a high level of scrutiny while developing the pilot phase. He suggested keeping the call up plan and that it would be helpful to have as an added step and part of the pilot. Then he suggested adding the call up process as part of the pilot.

- **J. Putnam** stated that there are pieces of FBC which would be subjective. He stated that he would rather have the FBC limited in location and if it would be found to not work, then a different approach could be implemented.

- **A. Brockett** suggested not adhering to the traditional criteria during Site Review, but would allow it to be called up if the project did not comply with the criteria. He stated that he would advocate this for the pilot only.

- **L. Payton** stated that the pilot could be a costly experiment from the community's perspective. She stated she would prefer to keep a threshold on the criteria (i.e. over three stories).

    - **H. Pannewig** added that the staff would want to know the Planning Board's specific concerns and why they would want the opportunity to call up an item. She stated that this would aid staff in drafting standards into the Code so that they would be discretionary.

- **C. Gray** stated that the "exceptions" listed in the FBC (page "X") vs. the standards that are outlined, may not be conforming to the regulatory plans. For this reason, she stated that she would prefer to preserve call ups.

    - **H. Pannewig** informed the Board that staff is working on the standards for exceptions to be granted.

- **B. Bowen**, in regards to what the trigger would be to call up an item, he stated that it would be a good idea to define this and have a call up process built in. He explained that the Site Review criteria would be set up along with questions. The FBC would answer those questions then there would be no need for a call up. In addition if the trigger for

DRAFT

call up would be a project over three stories, then the current zoning that is in place for building types two-five stories on buildable lots would all be subject to a call up.

- **J. Putnam** added that he would rather have the trigger line up with what would be reviewed by the Planning Board. He stated that the piece that is most flexible and vague would be a design quality element and the trigger should be linked to that. He stated that height should not be the only consideration.

- **A. Brockett** proposed to make a call up test within the pilot which either fails one of the prescriptive measures in the FBC or the applicant has asked for an exception which they would like Planning Board to review. This might assist staff to draft what type of event could be called up and might be used with any building, not just ones over three stories.

- **L. May** suggested that rather than having a specific trigger (i.e. height) for a call up, that perhaps it could just be part of the FBC criteria that will be met. It was suggested that everything could be subject to call up.

- **A. Brockett** stated that in regards to a call up, the Planning Board would need a set of criteria with which to evaluate the project. Therefore, he proposed the criteria being the FBC, specifically plus any exceptions asked for.

- **J. Gerstle** explained that the pilot phase would involve only two or three projects which might result in a maximum of two or three call up memos from staff. He felt that this would not require an unreasonable amount of staff time, and that it would be similar to current procedure.

- **J. Putnam** clarified that he would not be in favor of a call up process and would agree with option #2. However, if the Planning Board would like to have a call up process, then he would prefer to have it in the proposed structure suggested by **A. Brockett**.

- **A. Brockett** re-stated his proposal which was within the pilot phase, that any project be subject to Planning Board call up. The criteria under which Planning Board evaluated those call ups would be in compliance with the FBC itself along with any exceptions that were asked for.

- All Board members were in favor of **A. Brockett's** proposal.

- **B. Bowen,** in regards to the section entitled "Memo to Incorporate into Existing Sections" (M-0), in terms of sign and lighting plan requirements, stated that if the FBC would be replacing the sign code, it would need to be addressed. Otherwise he stated that the sign plans should be reviewed at a later review. He stated that the lighting plans should not be a part of the FBC since it would be a very high level engineering review. In addition, in regards to shadow analysis, he stated that it may need to be included if the Planning Board is telling applicants what the height should be of the building. In regards to the natural features section, the FBC asked for a ground water plan, which he stated he is unclear what exactly that would be. He stated also that it would be un-reasonable to

DRAFT

ask for a tree inventory with the proposed typography. It would be better served if received with the Site Plan. Finally, he proposed removing sections B & C.

Overview (M-1):

- **J. Putnam**, in regards to the energy related issue, questioned how the minimization of energy use and maximization of renewable energy would fit within the specific standards (i.e. roof types) outlined. He also questioned if it could be considered as criteria not meeting the FBC. He expressed concern that currently nothing is written in the FBC that would be a driving goal in terms of energy. To the extent that the FBC is meant to replace Site Review and Site Review currently has those criteria, and it should be in the FBC.

    - **L. Oberholtzer** informed the Board that these guidelines would be intended to be the "stated intents" behind the regulations as written and not regulatory requirements, such as in Site Review. The FBC would be both energy as well as IGCC.

    - **K. Guiler** informed the Board that staff is working on energy code updates. What was originally proposed in the FBC was what might work as of today. Staff would move toward changes and they may render what is currently written in the FBC obsolete. He stated that it felt more appropriate to address energy issues to the city as a whole presented as Code rather than putting a portion of the energy issues in the FBC which would need to be updated eventually.

    - **S. Richstone** informed the Board that staff would be getting a consultant to help support the staff in terms of how to get to the goal of Net Zero by 2031. This will require taking the current energy code and continuing to get move towards the Net Zero goal. One item that will be evaluated is adopting the IGCC. Energy codes will be addressed as well.

- **B. Bowen** stated that he would like to see energy code and IGCC implemented across the board within the city and be addressed on working buildings. In addition, he stated that solar access is not being dealt with (i.e. roof or solar panels) in the FBC.

- **A. Brockett** questioned how the adoption of new energy codes affects this FBC pilot.

    - **K. Guiler** informed the Board that if a new code was adopted, and a project had not begun, then it would be subject to the new code. The new code would be too specific and would be in conflict with the FBC; therefore the language was removed.

- **J. Putnam** expressed concern that it would be some time before the new energy related issues are in place. He stated that he thought it could be dealt with by a condition or by a future modification of the code. He stated that not referring to the energy issues within FBC would be a mistake.

- **J. Gerstle** agreed that the energy issues should be included.

DRAFT

- **A. Brockett** agreed that energy issues should be included; however section C-4 would not be the correct location. The energy issues would be goals, not regulatory matters. He stated that he would prefer section C-4 not repeat the Site Plan criteria. He stated that they should be more aspirational since they are goals. He agreed with other Board members to include criteria in the FBC regarding energy and solar. In addition, regarding the variety of housing types, which include detached housing units, the projects that would be involved with the FBC do not have single-family housing proposed. He suggested that item be removed from the document, since this would only be for Phase I of Boulder Junction.

- **B. Bowen,** regarding the section entitled "Human Scale Design" (C-2), he suggested that "human scale" would need to be defined as it could be interpreted differently by different people.

    - **L. Oberholtzer** stated that 5'6" would be the definition of "human scale". She stated the space should be appropriate to a human.

- **L. Payton** stated that she believed 5'6" would be too tall for a reference person when evaluating view corridors. A definition of "human scale" should be included in the FBC. Regarding the Regulating Plan, she stated that a variety of building types had been defined in the FBC, however currently only the "General" building type is projected to be used in the undeveloped portions of Boulder Junction. Because those buildings are allowed to go up to 55 feet, they will likely either be apartments or mixed use. They won't be townhomes, which require a "Row" building type specification in the Regulating Plan. There are no opportunities left in the Regulating Plan for the "Row" building type, which is unfortunate because that is the building type most likely to provide housing for in-commuters with families. She suggested that the north side of Goose Creek would be a good location for townhomes, that is, the "Row" building type.

    - **L. Oberholtzer** stated that the TVAP would need to be modified, which currently is calling for "high density residential" use.

    - **K. Guiler** added that if TVAP were to be modified from a "high density residential", it would be rezoned as RH-7.

- **B. Bowen**, in regards to the M-3 building types section, stated that the plans show the entrance configuration along Goose Creek facing Carbon Place, Junction Place and 30th Street. He clarified that this plan would orient the buildings in terms of elevation. He stated that in terms of entrance configuration, they should come from a Type A frontage closest to the street and need to face a Type A frontage such as Goose Creek. He suggested making the language clearer.

    - **K. Guiler** could make connection changes to TVAP.

- **B. Bowen** suggested having primary residences along the Goose Creek.

DRAFT

- **A. Brockett** suggested for the "general building type" adding a stipulation having each unit at ground level if residential with their own access available.

- **L. Payton** suggested locating a "Row" building type in the Regulating Plan to achieve a variety of housing types.

    - **S. Assefa** added that there may be a potential of putting a row house into the Pollard site.

- **J. Putnam** questioned if the terminated vistas requirements (G2 and G4) are too restrictive for creativity and thinking more broadly. They would not allow for Denver Union Station, which is the best terminated vista in the area. He suggested broadening the specific elements that provide more subjective intent and are more interesting.

- **B. Bowen** agreed with **J. Putnam** and added that the scale would be wrong for that view.

- **A. Brockett** agreed with **J. Putnam** and suggested not being prescriptive on how the vista would be terminated.

- **C. Gray** suggested reevaluating the view corridors from Goose Creek. She suggested the location of where Goose Creek would meet 30th Street.

- **B. Bowen** mentioned that it would be beneficial to acknowledge other views besides the Flatirons. He added that the example of the porch roof in the renderings would be too low and the porch landing would not be typical for a traditional porch. He suggested replacement of the graphic. On the next graphic, an example of a commercial entry, a handrail would be required and the stoop reference would be more residential.

PLANNING BOARD TOOK A SMALL BREAK

Overview (M-1) Continued:

- **C. Gray,** regarding the view corridor, stated she prefers the variance in heights of the buildings along 30th Street. The view corridor should be designated.

    - **K. Guiler** informed the Board that there would be a step-down in height with each building along 30th Street.

    - **L. Oberholtzer** reviewed the building heights with the Board as proposed in the plan. She proposed to modify the language to state that the 30% step-down height requirement should be along a street.

- The Board agreed that the view corridor should remain present along a street.

DRAFT

- **C. Gray** questioned why store frontages on the corner of Pearl and 30th Street are not present on both sides of the street. The zoning would require the entire ground floor.

- **J. Putnam** suggested that while it would be implied by staff, it would be helpful to show every use on the regulatory map. All Board members agreed.

<u>Public Realm (M-2)</u>:

- **L. Payton**, regarding the public outdoor space, questioned staff about play areas in the specifications for public outdoor space. She stated that she would like to see an indication of play grounds. She stated that the FBC does not get specific about family-oriented amenities in the public spaces

- **A. Brockett** stated that something more specific might make sense. He suggested that an opportunity for a play area would be pocket park.

    - **L. Oberholtzer** stated that they could require a type of park and/or playground.

- **C. Gray** agreed to designate specifically a park or play area, perhaps Meredith Park.

- **A. Brockett** stated that public open spaces are fully defined in this plan except for the pocket park along Junction Place and the Pollard Open Space. He suggested changing the structure to define those spaces specifically and call out the recreational amenities that are missing in TVAP. He suggested not getting overly prescriptive but to call it out to have it included. In addition, he suggested calling out the Pollard Park and what the Board would be looking for specifically in that location, in particular family oriented recreational facilities.

    - **S. Assefa** defined the language located in TVAP regarding the Pollard Open Space area for the Board. He explained that the city will be building that as a park.

    - **E. Stafford** informed the Board that the pocket park is currently city owned. He stated that construction will hopefully begin 2016 and carry into 2018.

    - **S. Richstone** informed the Board that there are guidelines within TVAP specifically regarding the pocket park.

- **A. Brockett**, in regards to public outdoor space types, he stated that the term "public" would imply everyone from the general public could access the space.

    - **H. Pannewig** recommended not using the term "public".

- **B. Bowen**, regarding the minimum block configurations, stated that they should be reduced. He stated that the level of cross-sections in the right-of-way would be beneficial. He suggested putting traffic in the drawings. Regarding the shared street, he stated that it would make more sense if the diagram showed tree grates on either side of

DRAFT

the street rather than a parking stall at the end. He suggested framing the intersection with trees rather than parking. He stated that he would submit an email with details to **L. Oberholtzer**.

  - **E. Stafford**, regarding the narrowing of the streets, stated that those designs had not been implemented yet into FBC.

- **B. Bowen** stated that it is disappointing that it had not been done. He stated that the streets should be as narrow as possible. He stated that they do work fine in other areas. In regards to the paseo, he stated that art should be required rather can encouraged. In addition, if trees would be required in the wider paseos, he stated the tree diagram should change (i.e. spacing). He suggested that an exception to the dark skies be written for paseos specifically. He stated that storm water structures in the green spaces should be required and designed to be habitable. Finally, he observed in the Plaza requirements, the minimum size declared would be 1.4 acres and that those numbers would be incorrect.

  - **L. Oberholtzer** stated that she lowered the minimum size of the Plaza requirements. She stated that it is important to set some minimums in order to achieve small scale parks. She stated that small scale parks mixed with large scale parks work better.

- **B. Bowen**, regarding the park greenway piece, stated that access to the water should be required.

<u>Building Types (M-3)</u>:

- **A. Brockett** expressed concern with the suppression of creativity in building/roof types by being overly specific in the FBC. He stated that the purpose of the FBC should be to get higher quality designs and more predictability. He added that this section in the FBC may take away options. He stated that he thought some of these guidelines could be removed, and the result would still be quality design and innovation (in particular the slope of the roofs).

- **L. May** stated that the reason for doing a FBC would be because there have not been satisfactory design results in the past. The FBC would serve as a method to provide a prescription to get better designs. He stated that the level of specificity in the FBC would be appropriate.

- **J. Putnam** stated that this may be the place where the amendment and exception process would start to work. He stated that the constrictive language would be in place so that if a design would be straying from the conservative, then the project could be subject to review.

- **J. Gerstle** agreed with **A. Brockett** stating if the design criteria are too specific, that creativity might be inhibited. He stated that he is not in favor of an arrangement resulting in uniform building designs.

DRAFT

- **B. Bowen** agreed. He stated that the generalities need to be correct, but not the detailing. He stated that he is unsure if this should be defined in a pilot FBC project.

- **L. Payton** agreed with **L. May**. The proposed FBC would be only for Boulder Junction. The proposed FBC offered quite a number of roof types. If this FBC would be adopted city wide, she stated that more types could be allowed. She stated that uniformity is not a bad thing. She stated that there is value to some level of uniformity, especially on the cap type of a roof. She stated that she would be in support of the M-3 section.

- **C. Gray** agreed with **L. Payton**.

- **A. Brockett** explained that he would not be suggesting that design elements are not specified. He suggested that the specificity should be reduced in the FBC. For example, he agreed with **L. Payton** regarding the flat cap type, but questioned why other types would be forbidden.

- **B. Bowen** suggested that the pitch of butterfly roofs should be clarified.

- **L. May** reminded the Board that there would be an exception process built in to the FBC. Therefore the options would not be precluded. The applicant would need to go through a review process. He stated that the point of the FBC would be to provide a prescriptive pathway for a project without a review.

- **B. Bowen** stated that there are at least two roof types that should be included and currently are not. He suggested that roof deck or guard rails and shade structures should be allowed. In addition, under flat cap roof type, he stated that a shed roof should be allowed.

- Some members of the Board disagreed with allowing a third story shed roof.

- **B. Bowen** stated he would email his additional comments to **L. Oberholtzer.**

- **C. Gray**, in regards to the allowable lengths and heights of the buildings, she questioned why the lengths of 150 feet were chosen.

    - **L. Oberholtzer** stated she observed lengths and scales of buildings and the blocks along Pearl Street. She stated that she felt 150 feet (a half block) would be comfortable.

- **L. May** questioned how towers would be addressed as an accent point to give relief for the buildings. He clarified the tower issue would be mute at this point.

<u>Site & Building Design (M-4)</u>:

- **J. Putnam** stated that, in terms of the building mass section, under section H-2, which applies to multiple buildings under one site, nothing is included that would refer to only one building on the site. He stated that it feels as if something is missing. The

DRAFT

applicability of H-2 could only happen when there would be more than one building. In addition, he questioned the section regarding building proportion and the "golden ratio/rectangle". He stated that would be a very pleasing element, however there may be an over emphasis on the "golden ratio".

  - **L. Oberholtzer** stated that she would remove it so it applies to all single buildings.

- **A. Brockett** agreed with **J. Putnam** regarding the language referring to the "golden ratio". He suggested that the language be changed so that the "golden ratio/rectangle" could be a tool or recommendation to be considered.

- **L. Payton** suggested that the language should be applied to elements logically perceived as individual components of the building as opposed to combinations of components (i.e. 1.5 window openings).

- **L. May** stated that the FBC would be offering people a prescriptive way to gain approval. He agreed that the "golden rectangle" would not be the only means to design a building; however it would be offering a direct pathway to approval without discretionary review.

- **J. Gerstle** agreed that the "golden rectangle" would be a suggestion and not a requirement of FBC.

  - **L. Oberholtzer** informed the Board that the "golden rectangle" would be applied to the building design and not the unit design.

- **B. Bowen** stated that he does not see it as something that would need to be outlined.

  - **L. Oberholtzer** stated that the "golden rectangle" would be used as a comprehensive tool, however not all buildings would need to conform it. The FBC would not require a specific percentage. The "golden rectangle" would not be used as a regulatory rule in other places.

- **L. May** stated that the FBC is meant to give clues and hints about how to create a good building.

- **A. Brockett** questioned staff if the "golden rectangle" has precedence in other jurisdictions or cities using this as a prescriptive regulatory tool.

  - **S. Assefa** answered stating that the "golden rectangle" has been a proven method to obtain good proportions within architecture. He agreed that there could be other ways to achieve that. He stated that by including it in the FBC, the intent has been to test it. In addition, he added that it would aid in the review process. He stated that the FBC would be new, a test, so it might be appropriate to include.

DRAFT

- **H. Pannewig** stated that she interpreted the language that the "golden rectangle" would need to be used at least twice, once in massing and the other in the façade. If it were used during those times, then the requirement would have been met.

- **A. Brockett** stated that some Board members were in disagreement on whether the "golden rectangle" should be a suggestion or requirement.

- **B. Bowen** suggested that as a follow-up on that topic, staff could review it as an example when looking at massing. He stated that it would need to be proven that it does work. Staff was asked to supply examples to the Planning Board.

- **L. May** addressed porches and balconies as an integral part of the building. He stated that he did not want to discourage them. He stated that they could be included as a prescription. In addition, he suggested that alleys could have the street facing material extend along the back. In addition, in regards to setbacks as opposed to building drops, that could be used more often. He stated that he approves of the 30% building drop off as was proposed and that it could be effective. Finally, in regards to the scaling of ground level, an effective scale reducing element might be a setback of the upper floor.

- **A. Brockett,** in regards to the façade materials, thought that the wood that would be specified as "already aged locally or from a similar climate" seemed very specific. He stated that there must be other types of wood that would work as well. Additional board members expressed concern.

    - **L. Oberholtzer** stated that the wood would be aged locally, not grown locally (i.e. adapted to this weather). She stated that she consulted with other architects for additional wood types. She stated that IPE wood could be considered however it would be considered non-sustainable.

- **A. Brockett** suggested that the attributes of the wood, rather than wood types, be called out.

- **B. Bowen** agreed. He stated that there would be many sources of wood and suggested to not define the species or type necessarily, but rather the performance. He stated he would email **L. Oberholtzer** additional material information. He clarified that the use of stucco is important and should be made specific. He suggested that the language would need to be clearer regarding the ethos system.

- **L. May** stated that stucco can be clean and desirable as well.

- **A. Brockett** stated that in the area of stucco installation and how it should be done, that techniques change and that the language should not be too specific.

DRAFT

- **L. Payton,** in regards to limited use of minor materials, questioned why fiber cement shingles and lap siding would be allowed on upper stories when that has been identified as a problem in some of the current construction.

- **B. Bowen** also questioned if the language would be allowing wood, then why the language would be limited to lap siding and shingles. He stated most architects would be looking to use a rain screen insulation which would give a more modern feel. He stated that it should not be prohibited.

- **L. May** explained that perhaps the FBC should "suggest" this material, rather than state it would be "preferred".

- **B. Bowen** stated that he would email comments regarding materials to **L. Oberholtzer**. He added that in his opinion it would be a mistake to limit color pallets to only historic pallets to manufactures. **A. Brockett** agreed. In addition, he stated that the awning system should allow light shells, rather than only awnings.

- **J. Gerstle**, regarding the prohibited major materials section, stated that exposed concrete could be nice. He stated that concrete may not want to appear in the explicitly permitted materials section, and suggested that it not be prohibited.

- **A. Brockett** explained that the builders could do what is permitted by right, but not what would be prohibited.

- **J. Gerstle** suggested that concrete be removed from the prohibited major materials section.

- **L. May** stated that glass block should not be prohibited as well.

- **C. Gray,** regarding roof top mechanical equipment, stated that she liked that the FBC is written to encourage the equipment be within the building and screened. She encouraged that the roof top mechanical equipment be thought about and to minimize these structures more than is currently done.

- **B. Bowen** stated that the way the FBC is currently written, it prohibits solar systems. He stated that this language would need to be changed.

- **J. Gerstle** suggested the restriction or use of noisy A/C units and require central air within the FBC. He suggested placing the condensing unit on roof.

- **A. Brockett,** regarding building articulation and building façade variety, stated concern that the FBC section would be working against the search for simple buildings. The past concepts have been that the city would not want buildings that are overly busy. He stated that he understands the desire to break up the massing of buildings; however the written section may work against the desire for simple buildings.

DRAFT

- **K. Guiler** explained that the intent was to require some design changes between buildings and that some believed FBC to be too rigid.

- **L. Oberholtzer** stated that in previous discussions with the working group, it was determined that the length of 150 feet was too long. She stated that the desired length would be closer to 90 feet for a building; however making all the building widths 90 feet would be too short. She stated that the requirements would be fairly simple, as well as different roof types on the different building segments, could be encouraged. The building articulation would break a 150 foot building into segments and would not result in a simple building.

- **A. Brockett** stated that it would be possible to have a building of that length with a single façade type.

- Most of the Board members voted to keep the façade variety requirement vs. making it simpler.

- **L. Payton**, in regards to community benefit, inquired if the city would ever be able to require on-site affordable housing.

  - **H. Pannewig** stated there are one or two sections in the Code where on-site affordable housing is required and it has been drafted in the form of a bonus condition. If on-site affordable housing would be required, then it should not be part of a discretionary review.

  - **S. Assefa** explained that the underlying assumption in terms of the community benefits through the FBC would be more of the design performance as it relates to building design. The issue of other community benefits had not been addressed through the FBC. The focus of this had been on the design outcomes and better buildings. The assumption would be that when FBC is done, then the product would be a more predictable building.

- **L. Payton** stated that it would beneficial to study and have affordable housing on-site.

- **J. Putnam** stated that the primary community benefit at this time would be to develop TVAP and the manner in which it was planned. He stated that the FBC would do that.

- **J. Gerstle** stated that he would strongly support the investigation of on-site affordable housing benefits as well.

- **A. Brockett** closed the discussion regarding FBC.

6. MATTERS FROM THE PLANNING BOARD, PLANNING DIRECTOR, AND CITY ATTORNEY

A. Suggestion of Revisions to the Application for Planning Board Applicants

DRAFT

- **A. Brockett** instructed the Board to review and to email any proposed revisions to the Planning Board Secretary by November 2, 2015.

7. DEBRIEF MEETING/CALENDAR CHECK

- **L. Payton** stated that the Board must all arrive on the same page of the memo/packet to have an adequate discussion. She suggested that the Chair state how page numbers would be referred to at the beginning of the meeting.

8. ADJOURNMENT

The Planning Board adjourned the meeting at 11:00 p.m.

APPROVED BY

_____
Board Chair

_____
DATE

DRAFT

CITY OF BOULDER
PLANNING BOARD ACTION MINUTES
November 19, 2015
1777 Broadway, Council Chambers

A permanent set of these minutes and a tape recording (maintained for a period of seven years) are retained in Central Records (telephone: 303-441-3043). Minutes and streaming audio are also available on the web at: http://www.bouldercolorado.gov/

PLANNING BOARD MEMBERS PRESENT:
Bryan Bowen, Chair
John Putnam
John Gerstle
Liz Payton
Crystal Gray

PLANNING BOARD MEMBERS ABSENT:
Leonard May

STAFF PRESENT:
Charles Ferro, Development Review Manager
Hella Pannewig, Assistant City Attorney
Cindy Spence, Administrative Specialist III
Sloane Walbert, Planner I
Jay Sugnet, Senior Planner
Jeff Yegian, Housing Division Manager

1. CALL TO ORDER

Chair, **B. Bowen**, declared a quorum at 6:12 p.m. and the following business was conducted.

2. APPROVAL OF MINUTES

On a motion by **J. Gerstle** and seconded by **J. Putnam** the Planning Board voted 5-0 (**L. May** absent) to approve the November 5, 2015 minutes as amended. The October 29, 2015 minutes were tabled for approval until the December 3, 2015 Planning Board Meeting.

3. PUBLIC PARTICIPATION

A. Jeremy Epstein, 4790 8th St., spoke in regards to call up Item D, 820 Lee Hill Dr. and requested to allow a six-foot cedar privacy fence.

4. DISCUSSION OF DISPOSITIONS, PLANNING BOARD CALL-UPS/CONTINUATIONS

A. Call Up Item**:** Floodplain Development Permit (LUR2015-00033), 2930 Pearl Street

B. Call Up Item: Floodplain Development Permit (LUR2015-00097), 1739 Broadway

C. Call Up Item: Floodplain Development Permit (LUR2015-00098), 1270 Old Tale Road

D. Call Up Item: Approval of an Amendment to Approved Site Plans to amend the approved fencing standards for the TrailCrossing at Lee Hill residential development to allow privacy fences in specific areas. The proposal would allow 6-foot cedar privacy fencing on Outlot A, 5-foot solid cedar fencing with 1 foot of latticework above (6 feet total) on Lots 1 and 17 and solid 3'-10" cedar fencing on Lots 18, 24, 25 and 31. Visually permeable 3'-10" high split rail fences would remain in all other locations. The project site is zoned Residential - Low 2 (RL-2). Case No. LUR2015-00094, 820 Lee Hill Drive.

E. Call Up Item: Approval of an Amendment to Approved Site Plans to demolish the former Olive Garden restaurant and construct an approximately 16,600 square foot Natural Grocers by Vitamin Cottage grocery store. Included in the development proposal are various site improvements, including new site and parking lot landscaping and storm water improvements. The project site is zoned Business – Community 2 (BC-2). Case No. LUR2014-00099, 2685 Pearl St.

Board Comments:

- **C. Gray** requested to call up Item D, Case No. LUR2015-00094, 820 Lee Hill Drive.
- **J. Putnam** requested to have more information from staff regarding the access and turning radius relating to the site criteria for Item E, Case No. LUR2014-00099, 2685 Pearl St.

5. PUBLIC HEARING ITEMS

A. Public hearing and Planning Board consideration of the following related to an approximately 3.2 acre property located at 4525 Palo Pkwy:

1. Recommendations on an application for Annexation of the property with an initial zoning of Residential Mixed – 2 (RMX-2) (case no. LUR2015-00081); and

2. Request for citizen, staff and Planning Board comment on a Concept Plan to develop the property with 100% affordable family housing development by Boulder Housing Partners, in partnership with Flatirons Habitat for Humanity. Proposal includes 44 tri-plexes, townhouses and apartment units in nine buildings (case no. LUR2015-00080).

Applicant: Lauren Schevets, Boulder Housing Partners
Property Owner: City of Boulder

- **B. Bowen** recused himself from this discussion.

Staff Presentation:
C. Ferro introduced the item.
S. Walbert presented the item to the Board.

Board Questions:
S. Walbert, C. Ferro and **H. Pannewig** answered questions from the Board.

DRAFT

Applicant Presentation:
Betsy Martens and **Lauren Schevets,** with **Boulder Housing Partners, 4800 Broadway,** the applicant, presented the item to the Board.

Board Questions:
Susan Lythgoe, B. Martens, L. Schevets, and **Chris McGranahan, the transportation engineer with LSC Transportation Consultants, 1889 York St., Denver,** representing the applicants, answered questions from the Board.

Public Hearing:

1. **Harold Hallstein, 3664 Pinedale St.,** spoke in opposition of the project and expressed concern regarding density, traffic, and possible relocation of citizens to a flood zone.
2. **Susan A. Lythgoe, 1455 Dixon St., #210, Lafayette,** spoke in support to the project.
3. **Sara Toole (pooling time with Dolores Sargent, Harvey Sargent, Shayna Stillman, Dorsey Delavigne), 3159 Ouray St.,** spoke in opposition of the project and expressed concerns regarding the proposed traffic, zoning and that the affordable housing meets the BVCP.
4. **Judy Langberg, 3166 Palo Pkwy,** spoke in opposition to the project due to density, safety, parking and traffic issues.
5. **Shannon Cox Baker, 3845 Elmhurst Pl.,** on behalf of Better Boulder, spoke in support to the project.
6. **Pamela Griffon, 700 Walnut St., #312,** spoke in support to the project.
7. **Barb Verson, 3830 Howe Ct.,** spoke in support of low density. Spoke in regards to the multi-use path and not necessary anymore.
8. **Ben Blazey, 3735 Ridgeway St.,** spoke in support to the project but expressed concern regarding the parking estimates advocated for not having a thoroughfare.
9. **Judy Langberg, 3166 Palo Pkwy,** spoke in opposition of the project.
10. **Jan Morzel, 2075 Upland Ave.,** spoke in support of the project**.**
11. **Willa Williford, 2567 Vine Pl.,** spoke in support of the project.
12. **Claudia Sanchez, 313 Pearl St., #2,** spoke in support of the project.
13. **Harvey Sargent, 3269 Ouray St.,** spoke in opposition of the project and stated that people that may live in affordable housing would not be required to work in Boulder.
14. **Judy Holleman, 3288 Palo Pkwy,** spoke in support of the project but expressed concern that the proposed design would not create a grid system in regards to the proposed streets.
15. **Elizabeth Mirowski, 3853 Fredricks Ct.,** spoke in support of the project and expressed concerns regarding the traffic and reducing the density.

Board Comments:
<u>Key Issue #1</u>: Is the proposed annexation consistent with city policies pertaining to the annexation of a property into the City of Boulder? Does the proposal meet the level of community benefit outlined in the BVCP?

- All Board members agreed that the proposal would be consistent with the Annexation Agreement and policies.

DRAFT

- **H. Pannewig** advised the Board that the Annexation Agreement could be drafted with some flexibility in terms of the multi-use path.

- **L. Payton** regarding the condition within the Agreement regarding the multi-use path stated that she would prefer to have that removed.

- **J. Putnam** agreed with **L. Payton** regarding the multi-use path. He stated that he would be open to leaving the condition in the Agreement at this time, but re-evaluate it at Site Review when the final configuration would be done.

- **J. Gerstle** stated that he would prefer the multi-use path to remain a condition of the Annexation Agreement.

<u>Key Issue #2</u>: Is the initial zoning of Residential Mixed – 2 (RMX-2) appropriate as the initial zoning for the subject property?

- **J. Putnam** said that the language of the medium land use designation states that the land use would generally be loated on major arterials. He stated that the BVCP designation would be appropriate and consistent. He added that the designation would only be appropriate with the limitation of 14 units/acre per the Annexation Agreement.

- **L. Payton** agreed with **J. Putnam's** comments the limitation of units 14 units/acres or fewer.

- **C. Gray** stated that the RMX-2 zoning would be more appropriate on transit quarters. She stated that the project would conform to underlying BVCP land use. She stated that the safety, traffic and density were major concerns of the public.

- **J. Gerstle** stated the RMX-2 zoning would be appropriate.

<u>Key Issue #3</u>: Is the proposed concept plan compatible with the goals, objectives and recommendations of the Boulder Valley Comprehensive Plan (BVCP)?

- **J. Gerstle** stated the proposed plan would be compatible. He stated that it would have clear community benefit and help provide a variety of residential opportunities and would be in accordance with the BVCP.

- **C. Gray** stated that the biggest problems with the project would be located offsite. Traffic through the area would be problematic. She suggested that the city would need to conduct a sub-area plan. Regarding the Concept Plan, she stated that one of the strengths would be the mix of homeownership and rentals. She stated that more homeownership than what is proposed would be a benefit to the project. In regards to the density, she suggested to combine some of the single-family units into multi-family units and create an opportunity for more families. In addition, regarding the widths of the streets, she stated that a smaller interior circulation would be better.

DRAFT

- **L. Payton** stated that the mix of rental and ownership units would be a nice mix. In regards of the parking and sidewalks, she stated that she agreed with staff's comments in the presentation. She stated that this location would be a great site for families and would have opportunity for nature play for children. She suggested the consolidation of one-bedroom units into three-bedrooms. She stated that it would reduce the number of units for the project, but it could create a benefit for the families. In regards to the access of emergency vehicles, she stated that if projects would be designed for emergency vehicle access, the result would be wider streets and people would tend to drive faster.

- **J. Putnam** stated that the project would be compatible with the goal and objectives of the BVCP. In regards to unit configuration, he stated that it would be important to have a mix of unit types to accommodate a full range of families. He stated that if all the units would be three-bedrooms, it would exclude many people. In addition, if the number of units were reduced, he stated that it would not address the safety or traffic concerns raised by neighbors.

<u>Key Issue #4</u>: Would the project be compatible with the character of the surrounding area? Are the architectural and site design consistent with the Site Review criteria in terms of quality and compatibility with the surrounding neighborhood??

- **J. Putnam** stated that the design elements within the project would fit within the surrounding neighborhood overall. Regarding the traffic issues and parking, he did have some suggestions. He stated that a proper traffic study would need to be done. He stated that the traffic study would not have to limit density. He stated that he would like to see weekend traffic counts on the traffic study. In regards to the entrance connection, he stated that he is less convinced it needs to be aligned with Ridgeway. He suggested that the entrance should loop back towards the west however he stated that the final decision should be linked to additional traffic analysis. He stated that he would like to see in the Site Review more information regarding the level of traffic assumed in the Northfields Commons traffic study. In regards to the internal design and whether it should be the "lollipop" or a grid system, he stated that there would be benefits of a common park area however he suggested designing the street to be more pedestrian and bicycle friendly. In regards to parking, he stated that it appears over parked; however it may be appropriate to have more than otherwise due to the soccer park and public concerns. He stated that it would be important to deal with the parking sensitively. He stated that the proposed parking by the multi-use path would not be the best transition on the east side of the property. He suggested the applicant review tuck-under carports or garages. He suggested incorporating electric vehicle charging stations. He suggested that if there is more parking that perhaps creating a design that some of the parking could be bought back or shared. He stated that a strong TDM would be needed. In regards to the path connection, he stated that he would be less convinced that a full ten-foot path on west side of the property would be needed. He stated that he would rather see better connection through the property such as street and sidewalk connections to obtain a better integration with the neighbors to the south and west.

DRAFT

- **L. Payton** stated that the portion of the Site Plan facing Palo Parkway is well done. She stated that the interior would have too much asphalt and parking. She suggested that the applicant address the weekend soccer field parking issue. She stated that this could reduce the number of parking spaces requested. If the parking spaces were reduced, then the plan could potentially have more park area in the center. She stated that she supports staff's recommendation of parallel parking with detached sidewalks. She stated that she likes the central park idea. She stated that she appreciates the idea of a grid layout, however, the area would be small and it may not achieve much and that the central park would be a nice amenity for the neighborhood. In regards to the path, she stated that there should not be a path on the plans. She stated that the diagonal parking would be too much asphalt.

- **C. Gray** agreed with **J. Putnam's** comments regarding the TDM Plan. She stated that providing Eco passes would be a benefit as it would reduce the cost for homeowners. She stated that she would like to hear more about the sustainability plan. In regards to recycling, she stated that only two areas would be designated on the Site Plan currently. She agreed that the interior of the project seemed to have a lot of asphalt. She suggested softening that. She expressed a concern that with no proposed garages or basements on the plan, that there would be no place for residents to store their items (i.e. bikes, sports equipment, etc.). She suggested the applicant review that. She stated that a traffic study would be important. She suggested a north connection through the project to the path. She stated that the north end impinges on the wild land feeling, therefore she suggested reviewing the Site Plan and to preserve the wild lands area.

- **J. Gerstle** expressed concern that the proposed plan treats the neighborhood as a separate campus with only one point of entry. He stated that he would prefer several points of entry and integrate the project with the surrounding neighborhood with points of entry and streets continuing as possible. He stated the neighborhood should not feel as though it were secluded and private. He stated that a grid layout would help address that issue. In addition, he stated that the path would help to make the area more permeable in general. He stated that there should be some public transit through the project rather than around. He stated that this would assist with the integration within the city. He stated that the current plan would be over parked and that too much area would be devoted to parking. He agreed that the traffic along Palo Parkway would be a concern and it should be considered. He stated that parking on the weekends could be a problem due to the existing soccer field however this development should not be burdened to supply extra parking since the problem currently exists.

- **C. Gray** stated that the proposed parking would be crowded. She suggested not reducing the parking but perhaps putting in garages. She stated that currently parking is an issue within neighborhood. She stated that she would want to make sure that the new residents would have place to park.

DRAFT

- **L. Payton** stated that a useful analysis for site review needs to be done in order to know how much of the parking issue would be due to the existing soccer fields. She suggested that the applicant or staff could provide useful solutions to the soccer field parking issue to assist the existing residents and new neighborhood.

- **J. Putnam** suggested looking at a neighborhood parking program. He stated that due to the nature of the site and existing concerns, it would require creativity on how to deal with the parking issue. He stated that traffic calming at this location would be a big issue. He stated that studies have shown with streets that have perceived narrowness; the roads would be safer and can slow traffic. He suggested that the city help with the traffic engineering. He stated that the traffic study and costs of calming should cover other neighborhoods as well such as Northfield Commons. In regards to the path, he stated that there is clearly a social path crossing diagonally from southwest to the northeast. He stated that people would continue to cut along this to gain access. He stated that this access would need to be a hardened path otherwise people will be crossing and destroying the existing grassland. He stated that perhaps a ten-foot concrete path may not be the answer, but at least a naturalized, dirt path and it must be addressed.

<u>Additional Key Issues:</u> Architecture, Proposed Materials, and Grid Layout

- **C. Gray** stated that she would be open to looking at a grid layout.

- **J. Putnam** stated that the architecture is good and consistent.

- **J. Gerstle** stated that he would like to see more of a variety of architecture. He stated the style is fine. He stated that the attractiveness of the project would be increased if there were a variety of different designs.

- **C. Gray** agreed. She stated that she likes the adopted concept and that that it would be reflective of the surrounding neighborhood.

- **L. Payton** agreed with the previous comments. She stated that this project could benefit from some guidance of the FBC. She stated that some elevations seemed top-heavy and the proportions seem a little off. She suggested using natural stone in the materials and wood or clad windows instead of vinyl windows. She stated that the tower depicted in one of the elevations did not fit with rest of proposed architecture. She stated that she would be in support of the proposed semitry, balance, fenestration, porches, and gables.

- **J. Putnam,** regarding materials, stated that he would like to see the suggestions that were made by **L. Payton**, however this would be a cost constrained project and that if more money spent on those materials, other things may be lost. He stated the mission would be to provide affordable housing and the project should not push too far as to jeopardize that mission.

- **L. Payton** stated that some of the materials she suggested would have lower maintenance and be more durable, therefore in the long run be more cost effective.

DRAFT

- **C. Gray** stated that there would not have a conflict with using true materials. She stated that intent would be to continue with quality.

- **L. Payton** expressed concern with the existing shallow ground water.

    - **C. Ferro** explained that the project would not be proposing basements and therefore would not be penetrating the ground water and water table.

Motion:
On a motion by **J. Putnam**, seconded by **J. Gerstle**, the Planning Board voted (4-0, **B. Bowen** recused himself, **L. May** absent) to recommend to City Council approval of the proposed annexation with initial zoning of Residential Mixed –2 (RMX-2) pertaining to request No. LUR2015-00081, incorporating the staff memorandum as findings of fact, subject to the recommended conditions of approval for the annexation as provided for in the draft annexation agreement in Attachment C, but making the placement of a multi-use path conditioned on an approved site review and city manager discretion.

Concept Plan Summary:
L. Payton gave a summary of the Board's recommendations. Since this is a Concept Review, no action is required on behalf of the Planning Board. The Board was unanimous regarding Key Issue #1that the proposed annexation would be consistent with city policies and that the proposal would meet the level of community benefit outlined in the BVCP. The Board was unanimous regarding Key Issue #2 that the zoning of Residential Mixed – 2 (RMX-2) would be appropriate. The Board was unanimous regarding Key Issue #3 that the proposed Concept Plan would be compatible with the goals, objectives and recommendations of the BVCP in general. In regards to Key Issue #4 site design, in general the Board supported the proposed density. In regards to traffic, the Board supported the need for a robust TDM plan and more analysis regarding a weekend traffic count and traffic calming devises. The Board was mixed regarding if the site proposal would be over parked. In regards to the site plan, the Board was in unanimous support for detached sidewalks. The Board was mixed regarding whether a grid layout would be a better solution. **J. Gerstle** added to make sure that the proposed site would not be a closed campus and to be fully integrated with the rest of the neighborhood. **L. Payton** continued in regards to the proposed central park, stated that the idea would be supported by the Board. She stated that the Board made comments regarding the provision of more storage and more covered parking. In additions, the addition of EV charging stations and sustainable elements were suggested. In regards to the proposed path, the Board stated it was not so concerned if it runs along the boundaries but to ensure some permeability. Regarding the point of access and Ridgeway, the Board agreed that they would like more traffic safety analysis. The Board's preference would be to not have the access completely lined up with Ridgway and perhaps have it offset. The Board's concern would be to have the proposed site integrate into the rest of the neighborhood.

- **B. Bowen** returned to the meeting.

DRAFT

6. MATTERS FROM THE PLANNING BOARD, PLANNING DIRECTOR, AND CITY ATTORNEY

A. Letter to Council Discussion

Board Comments:

- The Board members proposed their individual items to include in the Letter to Council.
- **J. Putnam** proposed the following:
  - Need to get the BVCP and Design Guidelines correct
  - To look at the Site Review Criteria
  - Look at Neighborhood parking
  - He suggested keeping a tight focus and to do a few items really well, rather than focus on too many items.

- **L. Payton** proposed the following:
  - To urge City Council to launch some sub-community or neighborhood plans
  - Prioritize the Broadway corridor
  - Revisit inclusionary zoning to require to affordable housing and integrated into every development
  - To look at resiliency in terms of the Flood Plain and FEMA maps should reflect climate change, potential for more extreme events, etc.

- **C. Gray** proposed the following:
  - Community benefit
  - To look at the Site Review Criteria
  - Climate commitment
  - To support the Landmarks Board to give them more flexibility to look at sub-divisions to assist in small house preservation
  - DUDG and the lacking of urban design plans
  - Neighborhood area planning
  - Parking
  - Inclusionary zoning and Annexations and would like to 20% (market rate) /30% (middle income) / 50% (affordable housing)

- **J. Gerstle** proposed the following:
  - Agreed with previous suggestions and that more focus would be needed
  - Community benefit
  - BVCP update

- **B. Bowen** proposed the following:
  - Agreed with previous suggestions and that more focus would be needed
  - Climate change
  - Support municiplization
  - EUI building code focus
  - DUDG very high in prioritization
  - Community engagement especially with DUDG

DRAFT

- Affordable housing (widening to 150% AMI, adequate funding, moving the goal from 10% to 20%)

- **B. Bowen** asked the Board who they would like to approach the Letter to Council. He stated that there seems to be a consensus regarding the items to include. He suggested a prioritization exercise

- **C. Gray** suggested each board member organize their own items. She reminded the Board that **L. May** is absent and will have items of his own. She stated that the small/tiny house issue often is lost under Housing.

- **J. Putnam** suggested to the Board that one member takes all of the items suggested and bundles them together and the outcome would be four-six headings. For example, he suggested combining "community benefit" with "Site Review criteria". In addition, under a "Housing" category, the items of affordability, small houses, and land marking could be grouped.

- **L. Payton** stated that the December 3, 2015 agenda would be a smaller meeting.

- **B. Bowen** designated that **J. Putnam** compile projects and stated that all board members email project ideas to him directly. **J. Putnam** will send the list to **C. Spence** and include it in the next Planning Board meeting packet.

B. DUDG Updated Schedule

Board Comments:

- **B. Bowen** stated that the DUDG has had seven meetings to date. He stated that the persons involved felt the results of those meetings were positive and successful. He explained that within those meetings there were many places reveled where there is no agreement. He stated that the focus would be on community engagement and design plans. The idea was neither to drastically alter the intent of the DUDG nor to craft new policy. He stated the focus was no positive reformatting and simplification of the guidelines. He explained that the DUGD will come to Joint Board meeting scheduled for December 10, 2015 with a draft of the new DUDG sent out beforehand. He stated that there is a need for a coherent Urban Design Plan.

- **C. Gray** added that a Public Open House is scheduled for December 8, 2015.

- **B. Bowen** stated that after the open house and joint meeting, the draft will be edited. In February 2016, the DUDG will go in front of all the boards for sign off. The Planning Board will be charged with adopting sections 2-6. He then stated that the entire DUDG would go to City Council for approval.

7. DEBRIEF MEETING/CALENDAR CHECK

DRAFT

8. ADJOURNMENT

The Planning Board adjourned the meeting at 9:59 p.m.

APPROVED BY

_____
Board Chair

_____
DATE

DRAFT

MEMORANDUM

TO: Planning Board
FROM: Sloane Walbert, Case Manager
DATE: November 23, 2015
SUBJECT: **Informational Item:**
ORDINANCE amending subsection 9-12-2(b), "Prohibition of Sale Before Plan Approval," B.R.C. 1981 to allow the owner of the property at 2180 Violet Ave. to sell a portion of the unplatted parcel to Habitat for Humanity of Boulder Valley, Inc. for the purposes of developing affordable housing. The subject property is zoned Residential - Medium 2 (RM-2) and Residential - Low 1 (RL-1). Case number LUR2015-00110.

This memorandum constitutes official notice as required by Section 79 of the City of Boulder Charter of any ordinance relating to housing, building codes or zones. No action is required by the Planning Board.

On December 1, 2015, the City Council will be asked to consider an ordinance to amend subsection 9-12-2(b), B.R.C. 1981, which prohibits the sale of any parcel of land that has not been subdivided in accordance with the city's subdivision regulations. The ordinance will enable the property owner (2145 Upland LLC) to sell a portion of the property located at 2180 Violet Ave. to Habitat for Humanity of Boulder Valley, Inc. before January 1, 2016. Refer to **Attachment A** for a survey of the proposed parcel to be purchased. Per Habitat for Humanity's attached written statement (**Attachment C**), if they do not own the property by that time, they will lose eligibility for Community Development Block Grant Disaster Recovery (CDBG-DR) grants for the planned low-income housing development on the property. The proposed ordinance can be found in **Attachment B**.

While this request only involves the allowance to sell a portion of property prior to subdivision in order to meet a federal funding deadline, a subsequent Concept Plan, Site Review, subdivision review with Preliminary and Final Plats and an Annexation Agreement Amendment would be required in order to develop the property as proposed by Habitat for Humanity. The result of the proposed ordinance would only allow for a fee simple portion of the property at 2180 Violet to be sold in order to meet a federal funding deadline.

BACKGROUND

The subject property is located at 2180 Violet Ave. at the southwest corner of 22nd Street and Violet Avenue (refer to Figure 1). The property was annexed into the city in 1997 and is subject to the requirements of the attached annexation agreement (**Attachment D**). As part of annexation, the northern portion of the property was assigned a zoning designation of Residential - Medium 2 (RM-2) and the southern portion of the property was zoned Residential - Low 1 (RL-1).

Figure 1: Vicinity Map

The annexation agreement contains very specific affordable housing requirements for the property including size-restricted units affordable to the first purchaser of the unit. This means that subsequent sales of each property would allow the affordability restrictions to be terminated over time. (As a note, the Restricted Unit Housing Program did not meet the city's affordable housing goals and was discontinued in 2002.) In addition to the required restricted units, the agreement requires the applicant to provide eight permanently affordable units, affordable in perpetuity, to households earning between 60% and 120% of the area median income (AMI), with an average income of 90% of AMI.

The owner also annexed two other properties simultaneously in 1997, located at 2145 Upland Ave. and 1917 Upland Ave., each of which has an annexation agreement including restricted units provisions. The 2145 Upland Ave. agreement's affordable housing requirement is based on the development potential of the property resulting in either one permanently affordable unit for households earning up to 90% of AMI or one size restricted unit initially affordable to households earning up 110% of AMI. The 1917 Upland Ave. agreement requires two units that are permanently affordable to households earning between 60% to 120% of the area median income (AMI), and one size-restricted unit initially affordable to households earning up 110% of AMI. Refer to Figure 2 for a vicinity map and **Attachments E and F** for the annexation agreements.

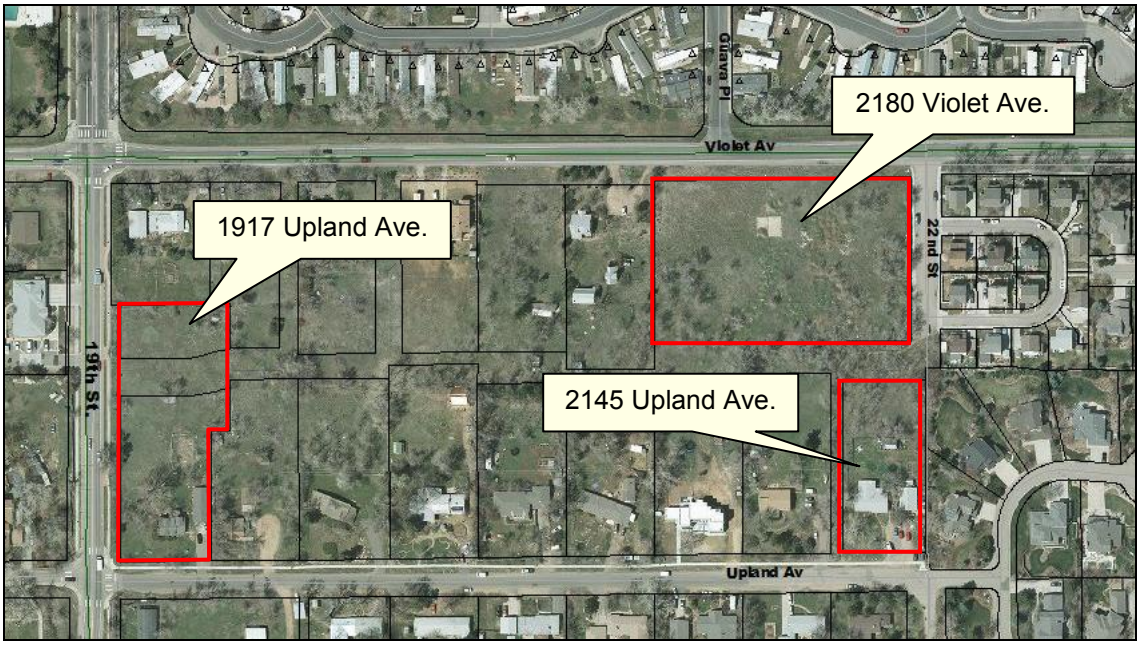

Figure 2: Vicinity Map

ANALYSIS

As indicated in the attached written statement, it is the current property owner's and Habitat for Humanity's ultimate goal to amend the annexation agreements that affect the three properties to transfer all of the affordable housing provisions required by the respective annexation agreements to the property at 2180 Violet Ave., absolving the properties at 2145 Upland Ave. and 1917 Upland Ave. of any future affordable housing requirements or contributions.

More specifically, under the current annexation agreement for 2180 Violet, the owner is required to provide eight permanently affordable units and five restricted units. With this proposal, Habitat will provide 15 permanently affordable for-sale units on the 2180 Violet property. Through the annexation agreement amendment, Habitat for Humanity intends to ask for additional density beyond the underlying zoning on the property to allow 17 units of

permanently affordable units. Any proposed amendments to the annexation agreements will be considered by Planning Board and City Council at that time.

The three annexation agreements require a total of 17 affordable units, 11 permanently affordable units affordable to households with incomes ranging from 60% to 120% of AMI and six restricted units that are only made affordable to the first purchaser; subsequent sales can be made to a market rate buyer and at market rate pricing as noted above. Habitat for Humanity's mission is to provide permanently affordable housing to households earning up to 60% of AMI; in Boulder, the range of incomes for households purchasing homes through Habitat for Humanity is 40% - 60% of AMI. Allowing Habitat to provide the required affordable housing results in a deeper and permanent level of affordable housing. Refer to **Attachment G** for an analysis of the current development potential on the subject properties and proposed affordable housing.

Per Boulder Valley Comprehensive Plan policy 1.24, applications for annexation are required to demonstrate a special opportunity or benefit to the city with emphasis given to the provision of permanently affordable housing. In 1997 when the three properties were annexed, the affordable housing provisions included in the respective annexation agreements were determined to provide such a benefit. However, staff finds that facilitating a proposal that would allow the exploration of a development plan that could result in 15 permanently affordable units represents a much greater permanent housing benefit than what was required in 1997. Community benefit would be fully explored in the context of subsequent review processes. The subject ordinance would only allow for Habitat for Humanity to secure the property and meet their funding deadline.

Questions about the proposed ordinance or decision should be directed to Sloane Walbert at (303) 441-4231 or via email at walberts@bouldercolorado.gov.

ATTACHMENTS

A. Survey of Proposed Parcel (2180 Violet Ave.)
B. Ordinance No. 8095
C. Written Statement
D. Annexation Agreement – 2180 Violet Ave.
E. Annexation Agreement – 2145 Upland Ave.
F. Annexation Agreement – 1917 Upland Ave.
G. Estimated Development Potential

EXHIBIT A

A PORTION OF TRACT 3021A, A PARCEL OF LAND LOCATED IN THE SOUTHWEST QUARTER OF THE NORTHEAST QUARTER OF SECTION 18, TOWNSHIP 1 NORTH, RANGE 70 WEST, OF THE 6TH PRINCIPAL MERIDIAN
CITY OF BOULDER, COUNTY OF BOULDER, STATE OF COLORADO

A PARCEL OF LAND LOCATED IN THE SOUTHWEST QUARTER OF THE NORTHEAST QUARTER OF SECTION 18, TOWNSHIP 1 NORTH, RANGE 70 WEST OF THE 6TH PRINCIPAL MERIDIAN, CITY OF BOULDER, COUNTY OF BOULDER, STATE OF COLORADO DESCRIBED AS:

COMMENCING AT THE NORTHEAST CORNER OF THE SAID SOUTHWEST QUARTER OF THE NORTHEAST QUARTER OF SECTION 18, AND CONSIDERING THE NORTH LINE OF THE SAID SOUTHWEST QUARTER OF THE NORTHEAST QUARTER OF SECTION 18 AS MONUMENTED TO BEAR SOUTH 89°53'00" WEST WITH ALL BEARINGS HEREIN RELATIVE THERETO;

THENCE ALONG THE EAST LINE OF THE SAID SOUTHWEST QUARTER OF THE NORTHEAST QUARTER OF SECTION 18 SOUTH 00°03'02" EAST 30.00 FEET (L1) TO THE SOUTH RIGHT-OF-WAY OF VIOLET AVENUE;

THENCE DEPARTING THE SAID EAST LINE OF THE SOUTHWEST QUARTER OF THE NORTHEAST QUARTER OF SECTION 18 AND ALONG THE SAID SOUTH RIGHT-OF-WAY OF VIOLET AVENUE SOUTH 89°53'00" WEST 24.00 FEET (L2) TO THE WEST RIGHT-OF-WAY OF NORTH 22ND STREET, SAID POINT BEING THE POINT OF BEGINNING;

THENCE DEPARTING THE SAID SOUTH RIGHT-OF-WAY OF VIOLET AVENUE AND ALONG THE SAID WEST RIGHT-OF-WAY OF NORTH 22ND STREET SOUTH 00°03'02" EAST 152.00 FEET TO THE SOUTH RIGHT-OF-WAY LINE OF VINE ALLEY;

THENCE DEPARTING THE SAID WEST RIGHT-OF-WAY OF NORTH 22ND STREET AND ALONG THE SAID SOUTH RIGHT-OF-WAY OF VINE ALLEY SOUTH 89°53'00" WEST 407.43 FEET TO THE EAST LINE OF TRACT 3021D;

THENCE DEPARTING THE SAID SOUTH RIGHT-OF-WAY OF VINE ALLEY AND ALONG THE SAID EAST LINE OF TRACT 3021D NORTH 00°04'27" EAST 152.00 FEET TO THE SAID SOUTH RIGHT-OF-WAY OF VIOLET AVENUE;

THENCE DEPARTING THE SAID EAST LINE OF TRACT 3021D AND ALONG THE SAID SOUTH RIGHT-OF-WAY OF VIOLET AVENUE NORTH 89°53'00" EAST 407.10 FEET TO THE POINT OF BEGINNING AND CONTAINING 1.4 ACRES, BEING ALSO 61,904.5 FT², MORE OR LESS.

THIS DESCRIPTION WAS PREPARED BY EARL F. HENDERSON, PLS (LICENSE #34993) FOR AND ON BEHALF OF ZENITH LAND SURVEYING, INC. IT IS NOT BASED UPON A MONUMENTED LAND SURVEY BY ZENITH LAND SURVEYING. THIS NOTE IS INCLUDED ACCORDING TO CRS 38-35-106.5. IT IS A LEGAL PART OF THE DESCRIPTION AND SHOULD NOT BE DELETED.

REVISED NOVEMBER 7, 2015
REVISED NOVEMBER 1, 2015
REVISED OCTOBER 24, 2015

COLORADO LICENSED
EARL FLETCHER HENDERSON
34993
11/7/15
PROFESSIONAL LAND SURVEYOR

THIS MAP DOES NOT REPRESENT A MONUMENTED LAND SURVEY OR TITLE SEARCH PERFORMED BY ZENITH LAND SURVEYING, INC. THERE MAY BE EASEMENTS OR OTHER ENCUMBRANCES ON THE SUBJECT PROPERTY THAT ARE NOT SHOWN HEREON.

Copyright ©

Zenith Land Surveying, Inc.
1880 Hawthorn Place
Boulder, Colorado 80304
303-579-2057-Tel.
www.ZenithLS.com

SCALE: 1"=80'	JOB NO. 12009A
DATE: 10/20/2015	PAGE 1 OF 2

EXHIBIT A

A PORTION OF TRACT 3021A, A PARCEL OF LAND LOCATED IN THE SOUTHWEST QUARTER OF THE NORTHEAST QUARTER OF SECTION 18, TOWNSHIP 1 NORTH, RANGE 70 WEST, OF THE 6TH PRINCIPAL MERIDIAN
CITY OF BOULDER, COUNTY OF BOULDER, STATE OF COLORADO

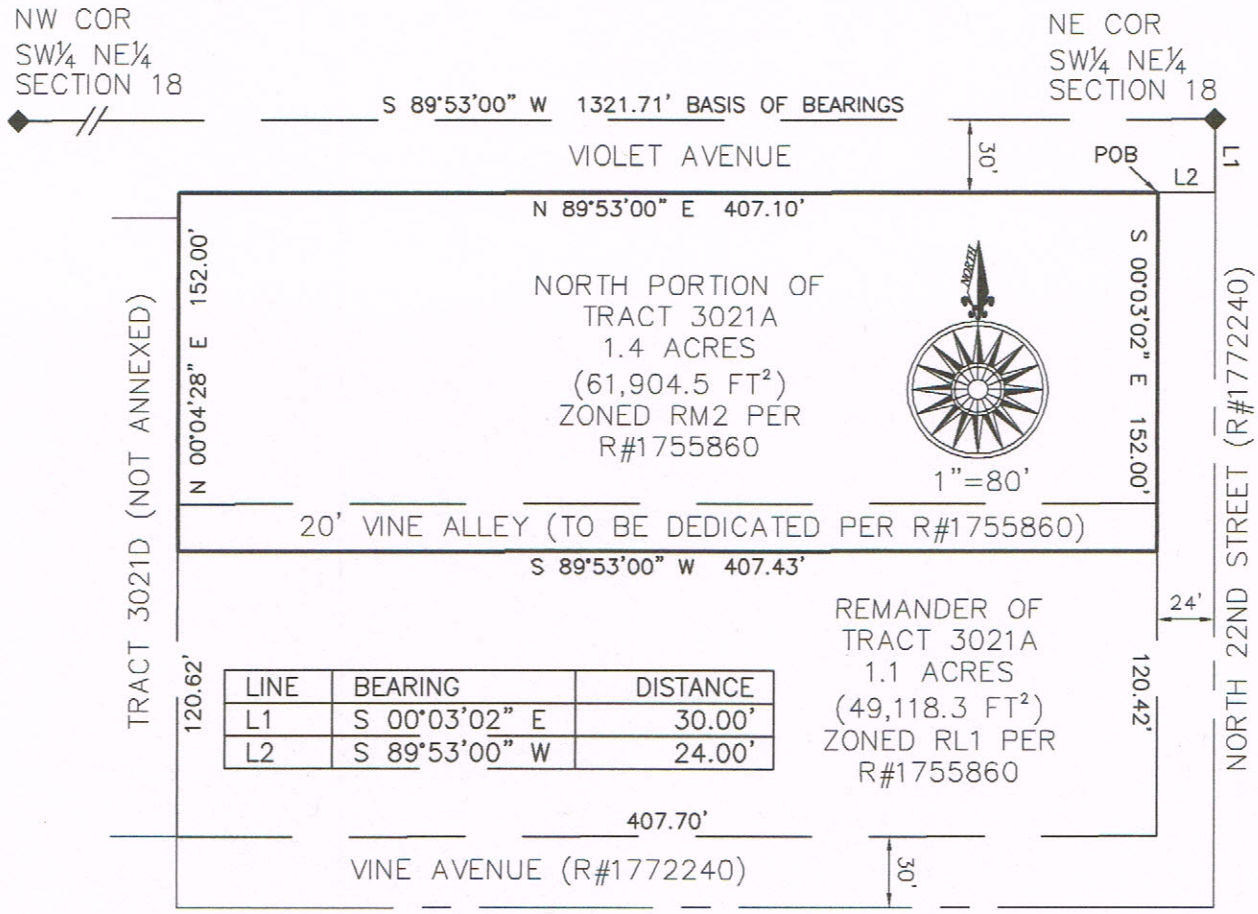

LINE	BEARING	DISTANCE
L1	S 00°03'02" E	30.00'
L2	S 89°53'00" W	24.00'

NOTES:

THIS EXHIBIT MAP IS PROVIDED SOLELY FOR THE PURPOSE OF VISUALIZING THE PROPERTY DESCRIPTION ON SHEET 1. IT IS NOT BASED ON A MONUMENTED LAND SURVEY. THIS EXHIBIT MAP IS MEANT FOR VISUALIZATION PURPOSES ONLY AND SHOULD NOT BE USED TO DEFINE ANY EASEMENT OR PROPERTY LINES.

REVISED NOVEMBER 7, 2015
REVISED NOVEMBER 1, 2015
REVISED OCTOBER 26, 2015
REVISED OCTOBER 24, 2015

THIS MAP DOES NOT REPRESENT A MONUMENTED LAND SURVEY OR TITLE SEARCH PERFORMED BY ZENITH LAND SURVEYING, INC. THERE MAY BE EASEMENTS OR OTHER ENCUMBRANCES ON THE SUBJECT PROPERTY THAT ARE NOT SHOWN HEREON.

COLORADO LICENSED
EARL FLETCHER HUNTSMAN
34993
11/7/15
PROFESSIONAL LAND SURVEYOR

Copyright ©

Zenith Land Surveying, Inc.
1880 Hawthorn Place
Boulder, Colorado 80304
303-579-2057-Tel.
www.ZenithLS.com

SCALE: 1"=80'	JOB NO. 12009A
DATE: 10/20/2015	PAGE 2 OF 2

ORDINANCE NO. 8095

AN ORDINANCE AMENDING SUBSECTION 9-12-2(b), B.R.C. 1981, TO ALLOW THE OWNER OF THE PROPERTY GENERALLY LOCATED AT 2180 VIOLET AVENUE TO SELL A PORTION OF AN UNPLATTED, PROPOSED SUBDIVISION TO HABTITAT FOR HUMANITY OF THE BOULDER VALLEY, INC. UNDER CERTAIN CONDITIONS, AND SETTING FORTH RELATED DETAILS.

THE CITY COUNCIL OF THE CITY OF BOULDER, COLORADO FINDS:

A. 2145 Upland LLC, a Colorado limited liability company, is the owner (the "Owner") of an approximately 1.2 acre parcel of land (the "Property"), a legal description of the Property is attached hereto as Exhibit A, which constitutes the northern portion of a larger parcel of land generally located at 2180 Violet Avenue (the "Larger Parcel), a legal description of the Larger Parcel is attached hereto as Exhibit B;

B. Habitat for Humanity of Boulder Valley, Inc., a Colorado nonprofit corporation, intends to purchase the Property to build and maintain permanently affordable housing;

C. Habitat for Humanity of Boulder Valley, Inc. must acquire ownership of the Property prior to January 1, 2016 to be eligible for CDBG-DR grants for the planned low-income housing development on the Property.

D. The Property has not yet been subdivided from the Larger Parcel;

E. The subdivision process will require several months to be completed; and

F. Subsection 9-12-2(b), B.R.C 1981, prohibits, among other things, the sale of any portion of a proposed subdivision until a plat thereof has been recorded.

BE IT ORDAINED BY THE CITY COUNCIL OF THE CITY OF BOULDER, COLORADO:

Section 1. Subsection 9-12-2(b), B.R.C. 1981, is hereby amended to allow the Owner to sell the Property to Habitat for Humanity of Boulder Valley, Inc. prior to the recording of a plat of a subdivision creating a separate lot for the Property, provided, however, that (1) the Property is not resold, nor is construction commenced thereon, prior to the time of a plat of the subdivision creating a lot for the Property and consistent with the requirements of Chapter 9-12, Subdivision, B.R.C. 1981, has been recorded, and (2) a concept plan review and site review approval shall be completed for the Larger Parcel prior to application for said subdivision consistent with the requirements of Subsection 9-2-14(b), B.R.C. 1981, as those requirements would apply in the absence of this ordinance and a sale of the Property prior to recording of a plat.

Section 2. This ordinance shall be considered an amendment to Chapter 9-12, "Subdivision," B.R.C. 1981. To the extent that this ordinance conflicts with any other ordinance of the city, such ordinance shall be suspended for the limited purpose of implementing this ordinance. Nothing in this ordinance shall be construed as a waiver of the City's police power.

Section 3. This ordinance is necessary to protect the public health, safety, and welfare of the residents of the city, is consistent with the goals and policies of the Boulder Valley Comprehensive Plan, and covers matters of local concern.

Section 4. The city council deems it appropriate that this ordinance be published by title only and orders that copies of this ordinance be made available in the office of the city clerk for public inspection and acquisition.

INTRODUCED, READ ON FIRST READING, AND ORDERED PUBLISHED BY TITLE ONLY this 17th day of November, 2015.

_____
Mayor

Attest:

_____
City Clerk

READ ON SECOND READING, PASSED, ADOPTED, AND ORDERED PUBLISHED BY TITLE ONLY this 1st day of December, 2015.

_____
Mayor

Attest:

_____
City Clerk

K:\pldr\o-8095-2nd reading-violet, 2180-2457.docx

LS-88-0020

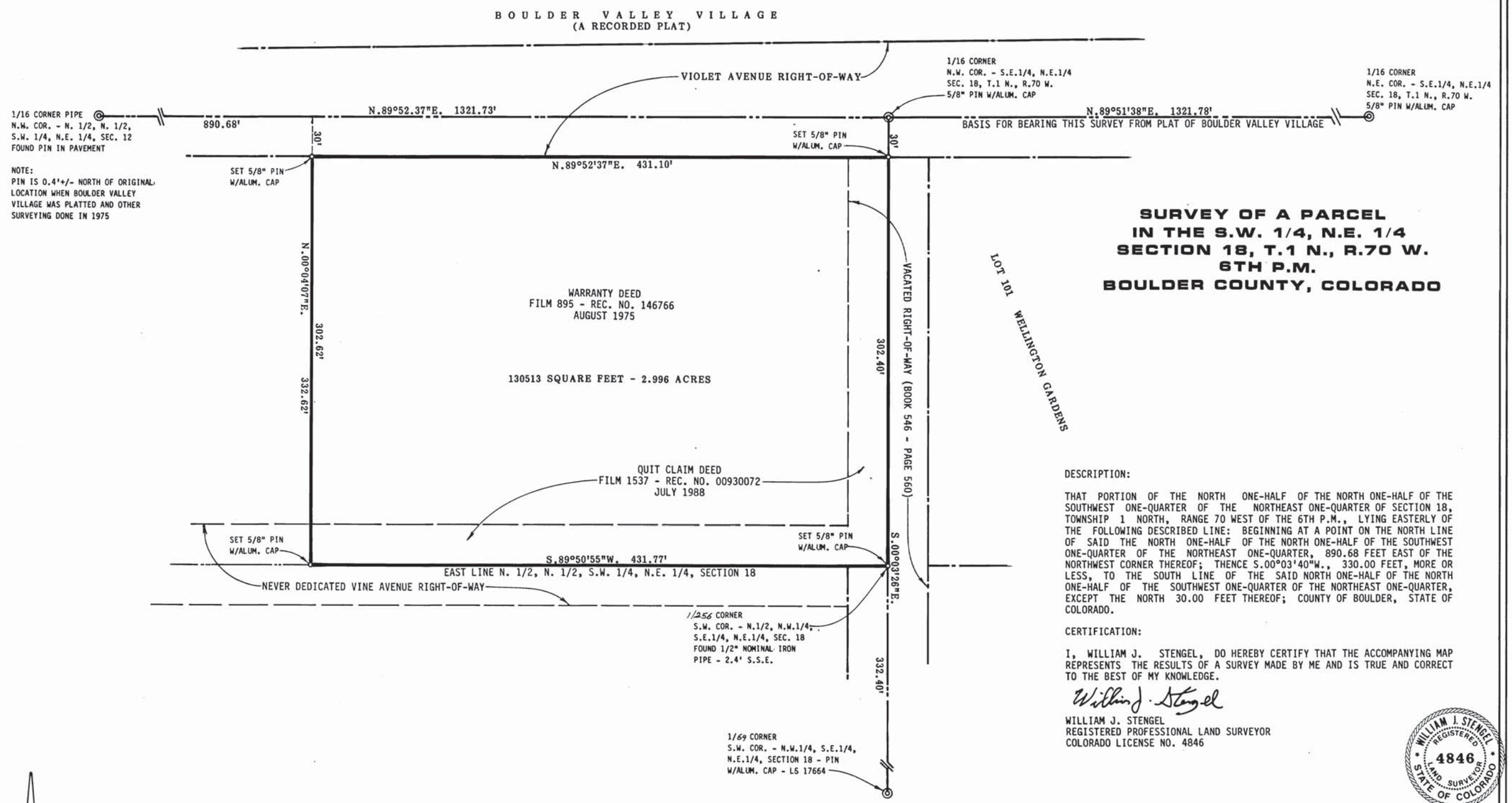

SURVEY OF A PARCEL
IN THE S.W. 1/4, N.E. 1/4
SECTION 18, T.1 N., R.70 W.
6TH P.M.
BOULDER COUNTY, COLORADO

DESCRIPTION:

THAT PORTION OF THE NORTH ONE-HALF OF THE NORTH ONE-HALF OF THE SOUTHWEST ONE-QUARTER OF THE NORTHEAST ONE-QUARTER OF SECTION 18, TOWNSHIP 1 NORTH, RANGE 70 WEST OF THE 6TH P.M., LYING EASTERLY OF THE FOLLOWING DESCRIBED LINE: BEGINNING AT A POINT ON THE NORTH LINE OF SAID THE NORTH ONE-HALF OF THE NORTH ONE-HALF OF THE SOUTHWEST ONE-QUARTER OF THE NORTHEAST ONE-QUARTER, 890.68 FEET EAST OF THE NORTHWEST CORNER THEREOF; THENCE S.00°03'40"W., 330.00 FEET, MORE OR LESS, TO THE SOUTH LINE OF THE SAID NORTH ONE-HALF OF THE NORTH ONE-HALF OF THE SOUTHWEST ONE-QUARTER OF THE NORTHEAST ONE-QUARTER, EXCEPT THE NORTH 30.00 FEET THEREOF; COUNTY OF BOULDER, STATE OF COLORADO.

CERTIFICATION:

I, WILLIAM J. STENGEL, DO HEREBY CERTIFY THAT THE ACCOMPANYING MAP REPRESENTS THE RESULTS OF A SURVEY MADE BY ME AND IS TRUE AND CORRECT TO THE BEST OF MY KNOWLEDGE.

William J. Stengel

WILLIAM J. STENGEL
REGISTERED PROFESSIONAL LAND SURVEYOR
COLORADO LICENSE NO. 4846

WILLIAM J. STENGEL REGISTERED 4846 LAND SURVEYOR STATE OF COLORADO

N

BOULDER COUNTY
STAFF SURVEYOR'S CERTIFICATE

I CERTIFY THIS SURVEY COMPLIES WITH THE INTENT OF COLORADO REVISED STATUTE 38-51-102 AND HOUSE BILL 1025. THIS REVIEW DOES NOT GUARANTEE SURVEY ACCURACY OR TITLE RESEARCH. SURVEY FILED IN COUNTY LAND USE OFFICE.

Jack Eynon Bowen

SCALE: 1" = 50'

0' 100' 200'

NOTICE: According to Colorado law you must commence any legal action based upon any defect in this survey within six years after you first discover such defect. In no event, may any action based upon any defect in this survey be commenced more than ten years from the date of the certification shown hereon.

WILLIAM J. STENGEL
LAND SURVEYOR
1049 STEARNS AVENUE • BOULDER, COLORADO
COLORADO REG NO. 4846 | WYOMING REG. NO. 406 | Phone 494-5663

SCALE	DATE	FIELD BOOK	FILE NO.
1" = 50'	AUG. '88	87/48	3/254A

LS-88-0020

Flatirons Habitat for Humanity®

Building homes building stability building community!

October 23, 2015

Sloane Walbert
Planner I, Department of Community Planning and Sustainability
City of Boulder
1739 Broadway, 3rd Floor
P.O. Box 791
Boulder, CO 80306-0791

Dear Sloane,

Thank you so much for your assistance with our effort to take advantage of a unique opportunity to purchase land in north Boulder. The willingness of everyone to meet with us and find a way for us to work toward acquisition of this land is most appreciated.

Flatirons Habitat for Humanity has an opportunity to receive CDBG-DR funds with which to purchase land for new construction. This opportunity, along with Robert Naumann's cooperation, gives us an unexpected chance to acquire land for 14 units of permanently affordable homes for ownership by hard-working families in the 25% - 60% AMI range. This funding opportunity does come with some challenges: we must close by 12/31/2015; the land must be subdivided before closing; the land must pass an environmental review that is currently in process. Given the placement of Vine Alley we are hoping to amend the allowable units in the Annexation Agreement to 17 through that process after closing.

We are aware that we will be required to formally subdivide the property following site review. It is our goal to create a site plan for this property that is sensitive to the neighborhood and is complementary to the plans being developed by Mr. Naumann for the single family homes he will build on the rest of the tract. Both Mr. Naumann and FHFH concur with your request to dedicate Vine Alley during this process. We have made some minor revisions to the drawings to accommodate this request.

We typically build permanently affordable 1,100 square foot homes that include three bedrooms, and one and one half bathrooms. Over the years, Flatirons Habitat has partnered with professional architects to make sure the overall design of our homes coincides with the overall look of the adjacent neighborhoods. Our homes have met or exceeded all building standards. Our community of volunteers provides the vast majority of our construction labor. On average it takes about nine months to complete a home. We have made a commitment to be a leader in building sustainable and energy-efficient affordable homes for hard-working families. We take advantage of Boulder's solar grants to ensure our homes have renewables. As an affiliate, we are interested in programs that will recognize our commitment to quality construction and design. We partner with programs and certifications, such as LEED for Homes, ENERGYSTAR, and Indoor airPLUS.

Our program is "a hand-up, NOT a hand-out." Families, at the time of closing on their home, commit to paying a monthly 0% interest mortgage payment, property taxes, home insurance, and Home Owners Association (HOA) fees. The HOA maintains the standard for the outside appearance of the home. We provide general education to our homeowners about ALL aspects of home ownership, including maintaining a home.

Many thanks

Susan A. Lythgoe, Executive Director

1455 Dixon Ave. Suite 210, Lafayette, CO 80026 | 303.447.3787 | flatironshabitat.org

ATTACHMENT D

Boulder County Clerk, CO AR R 51.00 D 0.00
1755860
Page: 1 of 10
12/16/1997 10:05A

ANNEXATION AGREEMENT

THIS AGREEMENT, made this November 8, 1997, by and between the CITY OF BOULDER, a Colorado home rule city, hereinafter referred to as "City;" and Robert C. Naumann, hereinafter referred to as "Applicant":

WITNESSETH:

RECITALS

WHEREAS, the Applicant is the owner of the real property generally described as 2100 Violet Avenue and more particularly described in Exhibit A, included by reference and hereby made a part of this agreement, which real property shall hereinafter be referred to as the "Subject Property"; and,

WHEREAS, the Applicant is interested in obtaining approval from the City of the annexation of the Subject Property in order to provide adequate urban services to said area, particularly city water and sewer; and

WHEREAS, the parties anticipate that annexation, with an initial zoning designation of Medium Density Residential - Established (MR-E) and Low Density Residential - Established (LR-E) will be consistent with the Boulder Valley Comprehensive Plan; and

WHEREAS, the City is interested in insuring that certain terms and conditions of annexation be met by the Applicant in order to protect the public health, safety and welfare and prevent the placement of an unreasonable burden on the physical, social, economic, or environmental resources of the City.

Unofficial Copy

K:\ALPHA\PL\CU\A-2100V2.AXA

1/6

COVENANTS

NOW, THEREFORE, in consideration of the recitals, promises and covenants herein set forth, and other good and valuable consideration herein receipted for, the parties agree as follow:

1. Prior to the first reading of the annexation ordinance, the Applicant shall:

(a) File an application, and pay the applicable fees, for inclusion in the Boulder Municipal Subdistrict of the Northern Colorado Water Conservancy District;

(b) Pay the applicable water line assessment for the 8" main in Violet Ave of $1,200.00;

(c) Pay the applicable water line assessment for the 12" main in Violet Ave of $1,837.01;

(d) Dedicate to the City of Boulder, in fee and at no cost, the following property for street purposes:

(1) a 30' wide right-of-way for Vine St along the southern line of the Subject Property;

(2) a 20' wide right-of-way for Vine alley thru the approximate center of the Subject Property running east to west;

(3) a 24' wide right-of-way for N. 22nd St. along the eastern line of the Subject Property; and

(4) a 7.5' wide public access easement for a pedestrian and bicycle path;

all in the locations depicted on the Infrastructure Plan for Crestview East, attached hereto as Exhibit B and incorporated herein by reference;

(e) Provide proof of payment of property taxes for the current year for the property dedicated in (d) above;

(f) Sell, or execute a "First Right of Refusal" agreement, in a form acceptable to the City Manager, for any water rights associated with, or appurtenant to the subject properties;

Unofficial Copy

2. The Applicant shall pay their pro-rata share of future improvements to Violet Ave, N. 22nd Street, Vine alley and Vine St. and/or to participate in and to not dissent therefrom or oppose or remonstrate against the establishment of a Local Improvement District (LID).

   If the Applicant develops prior to the formation of the LID, the applicant will be responsible for constructing on and off site drainage and street improvements in accordance with the approved Infrastructure Plan for the Crestview East Neighborhood, as required by the City to serve the annexing property at time of redevelopment. If a LID is formed after the construction of street improvements by a property owner, said owner may be eligible for a credit in accordance with Section 8-1-14 of the Boulder Revised Code, 1981 (BRC).

   Further, if the City does not acquire the entire Vine St. ROW adjacent to the Subject Property within one year of the date of this annexation or when the Applicant is permitted to obtain building permits for the units on the southwest corner of the Subject Property, whichever occurs later, the City will allow the Applicant to obtain access to his lots fronting on Vine St. by means of an access lane, until such time as Vine St. is built in its ultimate configuration.

Unofficial Copy

3. No development review application, nor building permit which exceeds 25% of the Boulder County Assessor's Actual Value of the existing structure, nor building permit for a new dwelling unit, shall be approved or issued for any individual parcel unless the Applicant for that parcel has agreed to meet the following requirements:

   (a) At time of redevelopment, the Subject Property shall be developed at a density consistent with the zoning; additionally, subdivision of the Subject Property may not reduce the density below that allowed by the parcel's square footage;

   (b) Eight (8) of the units permitted at time of development shall be permanently affordable and sold to households earning between 60% and 120% of the Area Median Income (AMI) and shall be distributed such that the average is affordable to households earning 90% of AMI;

   If these units are rental units they must be affordable to households earning less than 90% of AMI. Applicant shall co-operate with the City Housing Division in establishing the appropriate rental rates for the units, but in no

event will the rental rates be less than an amount equal to the PITI paid by the Applicant for the units;

(c) One (1) of the units in the area zoned LR-E (Low Density Residential - Established) which are permitted at time of development shall be size restricted (a "restricted unit" as that term is defined in Chapter 9-6, B.R.C.) and be initially affordable to households earning 110% of AMI;

(d) In the event that an increase in the development excise tax is adopted by the electorate in the November 1997 election, the allowable purchase price of the Restricted or permanently affordable units described or an increase in development fees currently charged in the August 1997 review of the B.R.C., 1981 is adopted by City Council after August 15, 1995, other than the normal annual increases resulting from increases in the AMI or CPI above will be increased by the increase in the tax or fees, as applicable;

(e) Four (4) of the units in the area zoned MR-E (Medium Density Residential - Established) which are permitted at time of development shall be size restricted (a "restricted unit" as that term is defined in Chapter 9-6, B.R.C.) and initially affordable to households earning between 80% and 120% of the Area Median Income (AMI) and shall be distributed such that the average is affordable to households earning 110% of AMI;

(f) At time of redevelopment, the Applicant shall execute, in a form acceptable to the City Attorney and the City Manager, covenants and deed restrictions for the permanently affordable and size and price restricted units, which shall include the initial sales price, the rental rate, and the index by which rates may increase, or which permanently restricts the size of the units, so as to guarantee the perpetual affordability of the units and which shall be recorded against the Subject Property; and

(g) The Applicant acknowledges that no building permits for improvements which are less than twenty-five percent (25%) of the Boulder County Assessor's actual value, will be issued which precludes the ability of an Applicant to redevelop the Subject Property consistent with the conditions noted above.

4. The City agrees that upon passage of the annexation ordinance at second reading, the City staff will continue to process the subdivision applicant for the Subject Property,

Unofficial Copy

previously filed. It is anticipated by the parties that a final decision on the subdivision can be completed within 120 days thereafter.

5. The Applicant shall convey drainage from the site in a manner that does not adversely affect abutting property owners.

6. The Applicant waives any vested property rights that may have arisen under Boulder County jurisdiction.

7. Applicant shall maintain the Silver Lake Ditch as it abuts the property until such time as the lateral is abandoned by the Silver Lake Ditch Co.

8. The Applicant shall demonstrate compliance with the North Boulder Subcommunity Plan Design Guidelines upon redevelopment which shall include but is not limited to the following continuing limitations on the Subject Property:

   (a) Street trees shall be selected from the "large maturing" varieties from the list of trees approved by the City Forester and planted as required by the City Forester at time of redevelopment;

   (b) Fences and landscaping berms are permitted in required front yards and side yard abutting a public street (up to the front facade of the principal building and the side yard building envelope) so long as either or the combination of both does not exceed forty-eight inches (48") in height. In no event may a berm exceed thirty-six inches (36") in height;

   Up to 7 foot fences are permitted in interior sideyard or rearyard setbacks so long as they are located at or behind the front facade of the principal building and at or behind the sideyard building envelope;

   (c) At least one "Entry" element including but not limited to, covered and uncovered porches and front doors, shall be provided on facades abutting a public street;

   (d) Attached and detached garages shall be setback at least ten feet (10') from the front facade of the principal building; or if side-loaded, may not project beyond the front facade of the building;

   (e) No direct driveway access to Violet Ave. shall be permitted;

Unofficial Copy

(f) Service access and parking shall be located off of the Vine alley only;

(g) Two story maximum above grade not including basements;

(h) No floor area ratio is imposed on the units to be built on the Subject Property; and

(i) Setbacks shall be measured from the boundaries of the pedestrian and bicycle easement.

9. This Agreement and any document executed pursuant hereto shall be null and void and of no consequence in the event that the Subject Property is not annexed to the City.

The Agreements and covenants as set forth herein shall run with the land and shall be binding upon the Applicant, his heirs, successors, representatives and assigns, and all persons who may hereafter acquire an interest in the Subject Property, or any part thereof. If it shall be determined that this Agreement creates an interest in land, that interest shall vest, if at all, within the lives of the undersigned plus twenty (20) years and 364 days.

In the event the Applicant breaches or fails to perform any required action under or fails to pay any fee specified under the Covenants of this Agreement, the Applicant acknowledges that the City may take all reasonable actions to cure the breach, including but not limited to the filing of an action for specific performance of the obligation to connect to the water and/or sewer system of the City. In the event the Applicant fails to pay any monies due under this agreement or fails to perform any affirmative obligation hereunder, the Applicant agrees that the City may collect the monies due in the manner provided for in Section 2-2-12, B.R.C. 1981, as amended, as if the said monies were due and owing pursuant to a duly adopted ordinance of the City or the City may perform the obligation on behalf of the Applicant, and collect its costs in the manner herein provided. The Applicant agrees to waive any rights he or she may have under Section 31-20-105, C.R.S., based on the City's lack of an enabling ordinance authorizing collection of this specific debt, or acknowledges that the adoption of the annexation ordinance is such enabling ordinance.

Unofficial Copy

EXECUTED on the day and year first above written.

OWNER:

BY: Robert C. Naumann
Robert C. Naumann

STATE OF COLORADO)
) ss.
COUNTY OF BOULDER)

The foregoing instrument was acknowledged before me this 26th day of August 1997, by Robert C. Naumann.

WITNESS MY HAND AND OFFICIAL SEAL

My commission expires: 4/16/99.

Melissa K. Nelson
Notary Public

Unofficial Copy

CITY OF BOULDER, COLORADO

BY: _____
City Manager

ATTEST:

_____
Director of Finance
Ex-officio City Clerk

APPROVED AS TO FORM:

_____
City Attorney

Unofficial Copy

K:\ALPHA\PL\CU\A-2100V2.AXA

EXHIBIT A

2100 Violet

DESCRIPTION:

THAT PORTION OF THE NORTH ONE-HALF OF THE NORTH ONE-HALF OF THE SOUTHWEST ONE-QUARTER OF THE NORTHEAST ONE-QUARTER OF SECTION 18, TOWNSHIP 1 NORTH, RANGE 70 WEST OF THE 6TH P.M., LYING EASTERLY OF THE FOLLOWING DESCRIBED LINE: BEGINNING AT A POINT ON THE NORTH LINE OF SAID THE NORTH ONE-HALF OF THE NORTH ONE-HALF OF THE SOUTHWEST ONE-QUARTER OF THE NORTHEAST ONE-QUARTER, 890.68 FEET EAST OF THE NORTHWEST CORNER THEREOF; THENCE S.00°03'40"W., 330.00 FEET, MORE OR LESS, TO THE SOUTH LINE OF THE SAID NORTH ONE-HALF OF THE NORTH ONE-HALF OF THE SOUTHWEST ONE-QUARTER OF THE NORTHEAST ONE-QUARTER, EXCEPT THE NORTH 30.00 FEET THEREOF; COUNTY OF BOULDER, STATE OF COLORADO.

CERTIFICATION:

I, WILLIAM J. STENGEL, DO HEREBY CERTIFY THAT THE ACCOMPANYING MAP REPRESENTS THE RESULTS OF A SURVEY MADE BY ME AND IS TRUE AND CORRECT TO THE BEST OF MY KNOWLEDGE.

William J. Stengel

WILLIAM J. STENGEL
REGISTERED PROFESSIONAL LAND SURVEYOR
COLORADO LICENSE NO. 4846

Unofficial Copy

Recorder's Note: 12-16-97
Portion of recorded document
may not reproduce legibly.

EXHIBIT B

2100 Violet

City Council and Planning Board Zoning and Infrastructure Plan

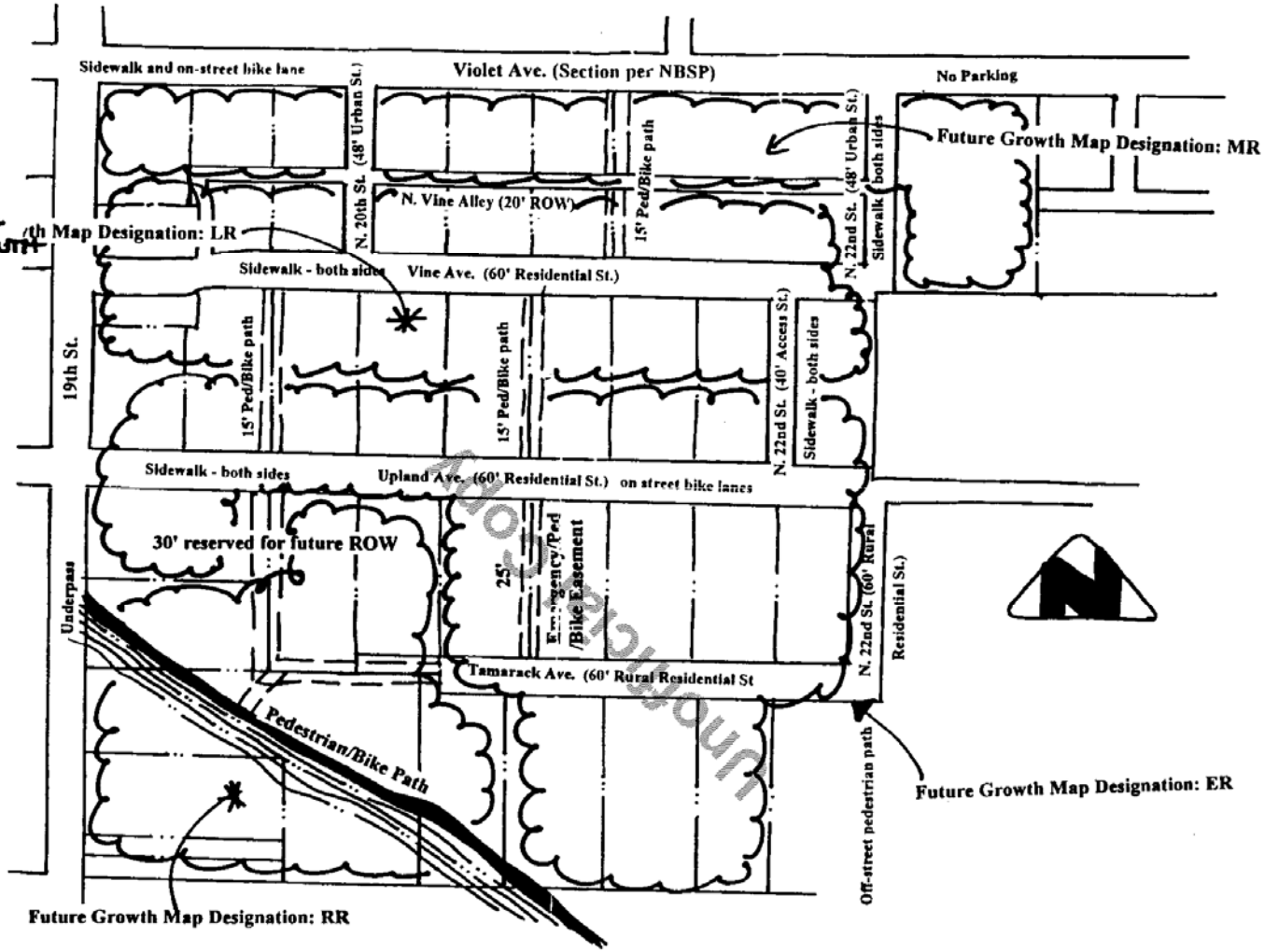

1755860
Page: 19 of 19
12/16/1997 10:05A
D 0.00
R 51.00
Boulder County Clerk, CO AR

ATTACHMENT E

Boulder County Clerk, CO RR R 46.00 D 0.00
1755861
Page: 1 of 9
12/16/1997 10:05A

ANNEXATION AGREEMENT

THIS AGREEMENT, made this November 8, 1997, by and between the CITY OF BOULDER, a Colorado home rule city, hereinafter referred to as "City;" and Robert C. Naumann, hereinafter referred to as "Applicant":

WITNESSETH:

RECITALS

WHEREAS, the Applicant is the owner of the real property generally described as 2145 Upland Avenue and more particularly described in Exhibit A, included by reference and hereby made a part of this agreement, which real property shall hereinafter be referred to as the "Subject Property"; and

WHEREAS, the Applicant is interested in obtaining approval from the City of the annexation of the Subject Property in order to provide adequate urban services to said area, particularly city water and sewer; and

WHEREAS, the parties anticipate that annexation, with an initial zoning designation of Low Density Residential - Established (LR-E) and Estate Residential - Established (ER-E) will be consistent with the Boulder Valley Comprehensive Plan; and

WHEREAS, the City is interested in insuring that certain terms and conditions of annexation be met by the Applicant in order to protect the public health, safety and welfare and prevent the placement of an unreasonable burden on the physical, social, economic, or environmental resources of the City.

K:\ALPHA\PL\CU\A-2145V2.AXA

5/6

Unofficial Copy

COVENANTS

NOW, THEREFORE, in consideration of the recitals, promises and covenants herein set forth, and other good and valuable consideration herein receipted for, the parties agree as follow:

1. Prior to the first reading of the annexation ordinance, the Applicant shall:

   (a) File an application, and pay the applicable fees, for inclusion in the Boulder Municipal Subdistrict of the Northern Colorado Water Conservancy District;

   (b) Pay the applicable Flood Control Plant Investment Fee of $1843.06;

   (c) Pay the applicable Park Land Acquisition and Capital Improvement Fee of $1,709.00;

   (d) Dedicate to the City of Boulder, in fee and at no cost, the following land for street purposes:

      (1) a 30' wide right-of-way for Vine St along the north side of the Subject Property; and

      (2) a 20' wide right-of-way for N. 22nd St along the west side of the Subject Property;

   (e) Provide proof of payment of property taxes for the current year on the property dedicated in (d) above; and

   (f) Sell the one (1) share of the Silver Lake Ditch appurtenant to the Subject Property.

2. The Applicant shall pay their pro-rata share of future improvements to Upland Avenue, N. 22nd St, and Vine St. and to participate in and to not dissent therefrom or oppose or remonstrate against the establishment of a Local Improvement District (LID).

   If the Applicant develops or redevelops prior to the formation of a LID, the Applicant will be responsible for constructing on and off site drainage and street improvements in accordance with the approved infrastructure plan for the Crestview

Unofficial Copy

East Neighborhood, as required by the City's Subdivision Regulations in Chapter 9-5, B.R.S., to serve the annexing property at time of development. If a local improvement district is formed after the construction of street improvements by a property owner, said owner may be eligible for a credit in accordance with Section 8-1-14 of the Boulder Revised Code, 1981 (B.R.C.).

3. No development review application, nor building permit which exceeds 25% of the Boulder County Assessor's Actual Value of the existing structure, nor building permit for a new dwelling unit, shall be approved or issued for any individual parcel unless the Applicant for that parcel has agreed to meet the following requirements:

   (a) At time of redevelopment, the Subject Property shall be developed at a density consistent with the zoning; additionally, subdivision of the Subject Property may not reduce the density below that allowed by the parcel's square footage;

   (b) If the LR-E portion of the property is developed with three units, then one (1) of the units provided at time of development of the Subject Property shall be permanently affordable for a household earning ninety percent (90%) of AMI. If the LR-E portion of the property is developed with only two units, then one (1) of the units shall be size restricted and initially affordable to households earning up to 110% of AMI; and

   (c) At time of development, the Applicant shall execute, in a form acceptable to the City Attorney and the City Manager, covenants and deed restrictions for the permanently affordable or restricted unit, which shall include the initial sales price, the rental rate, if applicable, and the index by which rates may increase, and, as applicable, covenants to guarantee the size, owner occupancy, and perpetual affordability of the unit, and which shall be recorded against the Subject Property; and

   (d) In the event that an increase in the development excise tax is adopted by the electorate in the November 1997 election, the allowable purchase price of the Restricted or permanently affordable units described or an increase in development fees currently charged in the August 1997 review of the B.R.C., 1981 is adopted by City Council after August 15, 1995, other than the normal annual increases resulting from increases in the AMI or CPI above will be increased by the increase in the tax or fees, as applicable.

Unofficial Copy

(e) The Applicant acknowledges that no building permits for improvements which are less than twenty-five (25%) of the Boulder County Assessor's actual value, will be issued which precludes the ability of an Applicant to redevelop the Subject Property consistent with the conditions noted above.

4. The Applicant shall convey drainage from the site in a manner that does not adversely affect abutting property owners.

5 The Applicant waives any vested property rights that may have arisen under Boulder County jurisdiction.

6 Applicant shall maintain the Silver Lake Ditch as it abuts the property until such time as the lateral is abandoned by the Silver Lake Ditch Co.

7. The Applicant shall demonstrate compliance with the North Boulder Subcommunity Plan Design Guidelines upon redevelopment which shall include but is not limited to the following continuing limitations on the Subject Property:

(a) Street trees shall be selected from the "large maturing" varieties from the list of trees approved by the City Forester and planted as required by the City Forester at time of redevelopment;

(b) Fences and landscaping berms are permitted in required front yards and side yard abutting a public street (up to the front facade of the principal building and the side yard building envelope) so long as either or the combination of both does not exceed forty-eight inches (48") in height. In no event may a berm exceed thirty-six inches (36") in height;

Up to 7 foot fences are permitted in interior sideyard or rearyard setbacks so long as they are located at or behind the front facade of the principal building and at or behind the sideyard building envelope;

(c) At least one "Entry" element including but not limited to, covered and uncovered porches and front doors, shall be provided on facades abutting a public street;

(d) Attached and detached garages shall be setback at least ten feet (10') from the front facade of the principal building; or if side-loaded, may not project beyond the front facade of the building;

Unofficial Copy

(e) Two story maximum above grade not including basements; and

(f) No floor area ratio is imposed on the units to be built on the Subject Property.

8. This Agreement and any document executed pursuant hereto shall be null and void and of no consequence in the event that the Subject Property is not annexed to the City.

The Agreements and covenants as set forth herein shall run with the land and shall be binding upon the Applicant, his heirs, successors, representatives and assigns, and all persons who may hereafter acquire an interest in the Subject Property, or any part thereof. If it shall be determined that this Agreement creates an interest in land, that interest shall vest, if at all, within the lives of the undersigned plus twenty (20) years and 364 days.

In the event the Applicant breaches or fails to perform any required action under or fails to pay any fee specified under the Covenants of this Agreement, the Applicant acknowledges that the City may take all reasonable actions to cure the breach, including but not limited to the filing of an action for specific performance of the obligation to connect to the water and/or sewer system of the City. In the event the Applicant fails to pay any monies due under this agreement or fails to perform any affirmative obligation hereunder, the Applicant agrees that the City may collect the monies due in the manner provided for in Section 2-2-12, B.R.C. 1981, as amended, as if the said monies were due and owing pursuant to a duly adopted ordinance of the City or the City may perform the obligation on behalf of the Applicant, and collect its costs in the manner herein provided. The Applicant agrees to waive any rights he or she may have under Section 31-20-105, C.R.S., based on the City's lack of an enabling ordinance authorizing collection of this specific debt, or acknowledges that the adoption of the annexation ordinance is such enabling ordinance.

Unofficial Copy

EXECUTED on the day and year first above written.

OWNER:

BY: Robert C. Naumann
Robert C. Naumann

STATE OF COLORADO)
) ss.
COUNTY OF BOULDER)

The foregoing instrument was acknowledged before me this 21st day of August, 1997, by Robert C. Naumann.

WITNESS MY HAND AND OFFICIAL SEAL

My commission expires: 4/16/99.

Melissa K Richson
Notary Public

Unofficial Copy

CITY OF BOULDER, COLORADO

BY: _____
City Manager

ATTEST:

_____
Director of Finance
Ex-officio City Clerk

APPROVED AS TO FORM:

_____
City Attorney

Unofficial Copy

K:\ALPHA\PL\CU\A-2145V2.AXA

2145 Upland

EXHIBIT "A"

LEGAL DESCRIPTION

A tract of land situated in the Northeast One Quarter of Section 18, Township 1 North, Range 70 West of the 6th P.M., described as follows:
Beginning at the South One Quarter corner of said Section 18; thence North 0°05'30" East along the North-South centerline of said Section 18, a distance of 3,328.4 feet; thence North 89°50' East, 1,171.06 feet to the TRUE POINT OF BEGINNING; thence North 0°03'40" East, 332.25 feet; thence North 89°51'44" East, 152.51 feet; thence South 0°02'23" East, 332.18 feet; thence South 89°50' West, 153.09 feet to the True Point of Beginning,
EXCEPT the South 30 feet thereof;
County of Boulder, State of Colorado.

Unofficial Copy

City Council and Planning Board Zoning and Infrastructure Plan

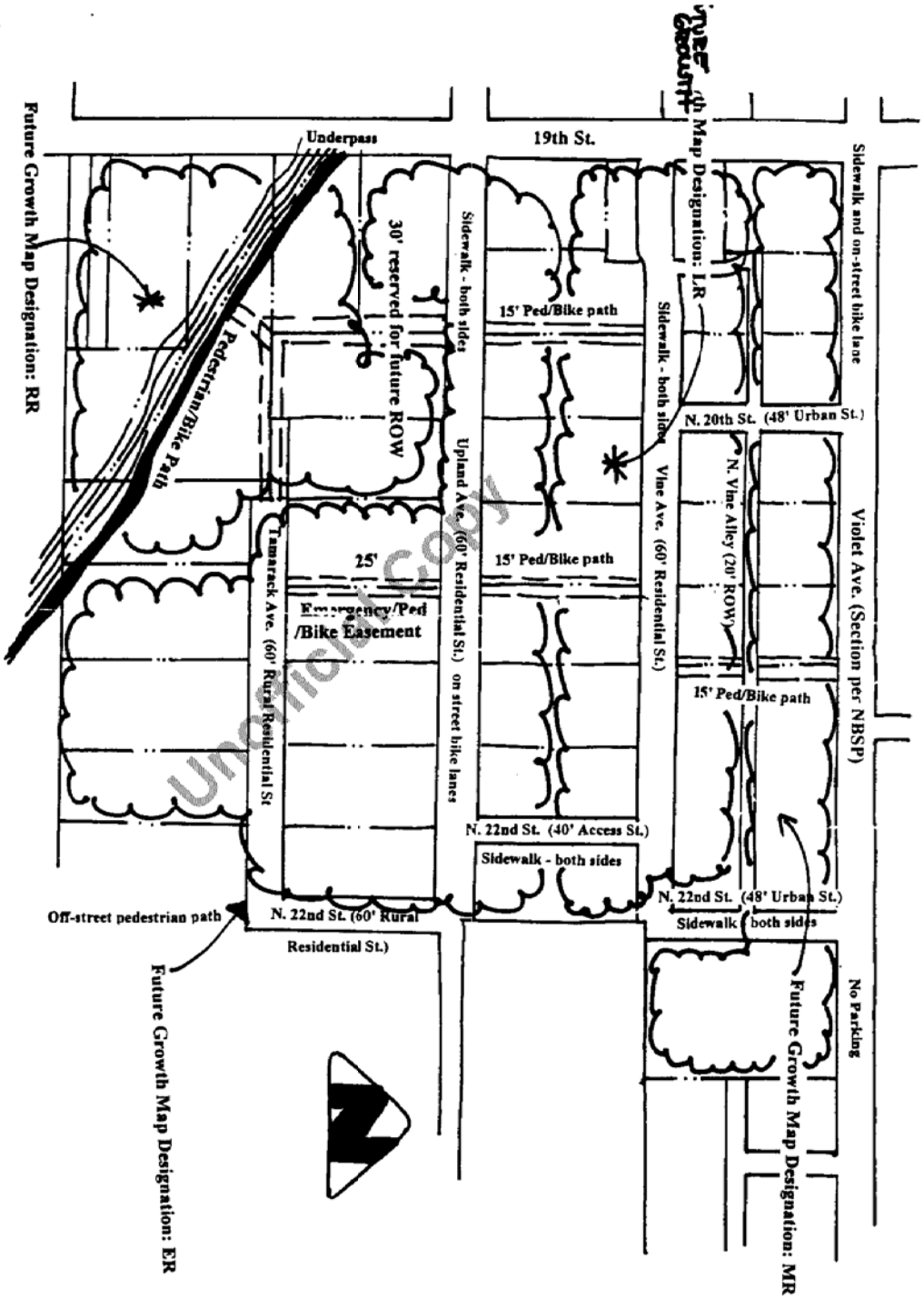

Unofficial Copy

1755861
Page: 9 of 9
12/16/1997 10:05A
Boulder County Clerk, CO RR R 46.00 D 0.00

ATTACHMENT F

Boulder County Clerk, CO AA R 46.00 D 0.00
1755859
Page: 1 of 9
12/16/1997 10:05A

ANNEXATION AGREEMENT

THIS AGREEMENT, made this November 8, 1997, by and between the CITY OF BOULDER, a Colorado home rule city, hereinafter referred to as "City;" and Robert C. Naumann, hereinafter referred to as "Applicant":

WITNESSETH:

RECITALS

WHEREAS, the Applicant is the owner of the real property generally described as 1917 Upland Avenue and more particularly described in Exhibit A, included by reference and hereby made a part of this agreement, which real property shall hereinafter be referred to as the "Subject Property"; and,

WHEREAS, the Applicant is interested in obtaining approval from the City of the annexation of the Subject Property in order to provide adequate urban services to said area, particularly city water and sewer; and

WHEREAS, the parties anticipate that annexation, with an initial zoning designation of Low Density Residential - Established (LR-E) and Estate Residential - Established (ER-E), will be consistent with the Boulder Valley Comprehensive Plan; and

WHEREAS, the City is interested in insuring that certain terms and conditions of annexation be met by the Applicant in order to protect the public health, safety and welfare and prevent the placement of an unreasonable burden on the physical, social, economic, or environmental resources of the City.

RECORDER'S NOTE: This document lacks a notary signature and/or seal 12-16-97

Unofficial Copy

K:\ALPHA\PL\CU\A-1917V2.AXA

316

COVENANTS

NOW, THEREFORE, in consideration of the recitals, promises and covenants herein set forth, and other good and valuable consideration herein receipted for, the parties agree as follow:

1. Prior to the first reading of the annexation ordinance, the Applicant shall:

   (a) File an application, and pay the applicable fees, for inclusion in the Boulder Municipal Subdistrict of the Northern Colorado Water Conservancy District;

   (b) Pay the applicable Flood Control Plant Investment Fee of $1,314.28;

   (c) Pay the applicable Park Land Acquistion and Capital Improvement Fee of $1,709.00;

   (d) Pay the outstanding water assessment for the main in 19th St of $9,918.45;

   (e) Pay the outstanding water assessment for the main in Upland Ave of $44.93;

   (f) Pay the outstanding sewer main assessment of $1,884.65;

   (g) Dedicate to the City of Boulder, in fee and at no cost, the following property for street purposes:

      (1) a 10.5' wide right-of-way to enlarge 19th St to 40.5 feet in width from the centerline;

      (2) a 60' wide right-of-way for Vine St. in a location as depicted in the approved Infrastructure Plan for the Crestview East area, attached hereto as Exhibit B and incorporated herein by reference; and

   (h) Provide proof of payment of property taxes for the current year for the property dedicated in (g) above.

2. The Applicant shall pay their pro-rata share of future improvements to 19th St, N. 22nd St, and Vine St. and/or to participate in and to not dissent therefrom or oppose or remonstrate against the establishment of a Local Improvement District (LID).

Unofficial Copy

If the Applicant redevelops prior to the formation of the LID, the Applicant will be responsible for constructing on and off site drainage and street improvements in accordance with the approved Infrastructure Plan for the Crestview East Area, as required by the City to serve the annexing property at time of development. If a LID is formed after the construction of street improvements by a property owner, said owner may be eligible for a credit in accordance with Section 8-1-14 of the Boulder Revised Code, 1981 (BRC).

3. No development review application, nor building permit which exceeds 25% of the Boulder County Assessor's Actual Value of the existing structure, nor building permit for a new dwelling unit, shall be approved or issued for any individual parcel unless the Applicant for that parcel has agreed to meet the following requirements:

(a) At time of redevelopment, the Subject Property shall be developed at a density consistent with the zoning; additionally, subdivision of the Subject Property may not reduce the density below that allowed by the parcel's square footage;

(b) Two (2) of the units provided at time of development shall be permanently affordable for households earning between 60% and 120% of the Area Median Income (AMI) and shall be distributed such that the average is affordable to households earning 90% of AMI;

(c) One (1) of the units in the area zoned LR-E (Low Density Residential - Established) which are permitted at time of redevelopment shall be size restricted and initially affordable to households earning 110% of AMI;

(d) In the event that an increase in the development excise tax is adopted by the electorate in the November 1997 election, the allowable purchase price of the Restricted or permanently affordable units described or an increase in development fees currently charged in the August 1997 review of the B.R.C., 1981 is adopted by City Council after August 15, 1995, other than the normal annual increases resulting from increases in the AMI or CPI above will be increased by the increase in the tax or fees, as applicable;

(e) At time of redevelopment, the Applicant shall execute, in a form acceptable to the City Attorney and the City Manager, covenants and deed restrictions for the permanently affordable and size and price restricted units, which shall include the initial sales price, the rental rate, and the index by which rates may increase, or which permanently restricts the size of the units, so as to

Unofficial Copy

guarantee the perpetual affordability of the units and which shall be recorded against the Subject Property; and

(f) The Applicant acknowledges that no building permits for improvements which are less than 25% of the Boulder County Assessor's actual value, will be issued which precludes the ability of an Applicant to redevelop the Subject Property consistent with the conditions noted above.

4. The Applicant shall convey drainage from the site in a manner that does not adversely affect abutting property owners.

5. The Applicant waives any vested property rights that may have arisen under Boulder County jurisdiction.

6. The Applicant shall demonstrate compliance with the North Boulder Subcommunity Plan Design Guidlines upon redevelopment which shall include but is not limited to the following continuing limitations on the Subject Property:

(a) Street trees shall be selected from the "large maturing" varieties from the list of trees approved by the City Forester and planted as required by the City Forester at time of redevelopment;

(b) Fences and landscaping berms are permitted in required front yards and side yard abutting a public street (up to the front facade of the principal building and the side yard building envelope) so long as either or the combination of both does not exceed forty-eight inches (48") in height. However, in no event may a berm exceed thirty-six inches (36") in height;

For properties abutting 19th Street, a fence which shall not exceed thirty-six inches (36") in height may be located on the top of the thirty-six inches (36") berm;

Up to 7 foot fences permitted on interior sideyard or rearyard lot lines equal to or behind the front facade of the principal building;

(c) At least one "Entry" element including but not limited to, covered and uncovered porches and front doors shall be provided on facades abutting a public street;

Unofficial Copy

(d) Attached and detached garages shall be setback at least 10' from the front facade of the principal building; or if side-loaded, may not project beyond the front facade of the building;

(e) Two story maximum above grade not including basements; and

(f) No floor area ratio is imposed on the units to be built on the Subject Property.

7. This Agreement and any document executed pursuant hereto shall be null and void and of no consequence in the event that the Subject Property is not annexed to the City.

The Agreements and covenants as set forth herein shall run with the land and shall be binding upon the Applicant, his heirs, successors, representatives and assigns, and all persons who may hereafter acquire an interest in the Subject Property, or any part thereof. If it shall be determined that this Agreement creates an interest in land, that interest shall vest, if at all, within the lives of the undersigned plus twenty (20) years and 364 days.

In the event the Applicant breaches or fails to perform any required action under or fails to pay any fee specified under the Covenants of this Agreement, the Applicant acknowledges that the City may take all reasonable actions to cure the breach, including but not limited to the filing of an action for specific performance of the obligation to connect to the water and/or sewer system of the City. In the event the Applicant fails to pay any monies due under this agreement or fails to perform any affirmative obligation hereunder, the Applicant agrees that the City may collect the monies due in the manner provided for in Section 2-2-12, B.R.C. 1981, as amended, as if the said monies were due and owing pursuant to a duly adopted ordinance of the City or the City may perform the obligation on behalf of the Applicant, and collect its costs in the manner herein provided. The Applicant agrees to waive any rights he or she may have under Section 31-20-105, C.R.S., based on the City's lack of an enabling ordinance authorizing collection of this specific debt, or acknowledges that the adoption of the annexation ordinance is such enabling ordinance.

Unofficial Copy

EXECUTED on the day and year first above written.

OWNER:

BY: _____
Robert C. Naumann

STATE OF COLORADO)
) ss.
COUNTY OF BOULDER)

The foregoing instrument was acknowledged before me this 21st day of August 1997, by Robert C. Naumann.

WITNESS MY HAND AND OFFICIAL SEAL

My commission expires: 4/16/99.

_____
Notary Public
~~Address~~ _____

Unofficial Copy

CITY OF BOULDER, COLORADO

BY: _____

City Manager

ATTEST:

_____
Director of Finance
Ex-officio City Clerk

APPROVED AS TO FORM:

_____
City Attorney

Unofficial Copy

K:\ALPHA\PL\CU\A-1917V2.AXA

EXHIBIT A

1917 Upland

PARCEL I:

A tract of land in the Southeast Quarter of the Northeast Quarter of Section 18, Township 1 North, Range 70 West of the 6th P.M., described as follows: Commencing at the Southeast corner of Section 18; thence North 0°08'30" West 3978.54 feet along the West line of said Section 18; thence North 89°33' East 2626.56 feet to the Northwest corner of that tract of land conveyed to Charles J. Backer as described in Deed recorded on Film 580, Reception No. 826040 of the Boulder County Records, thence North 89°57' East 187.27 feet along the North line of that tract of land described on Film 580, Reception No. 826040, to the Northwest corner of that tract of land conveyed to Bruce W. Lacock and Ruth M. Lacock by deed recorded April 16, 1971, Film 728, Reception No. 973035; thence South 0°05'30" West along the most Westerly line of the said land conveyed to Lacock a distance of 232.61 feet to the TRUE POINT OF BEGINNING; thence North 89°57' East 30.13 feet to the Westerly line of the said land conveyed to the said Lacock; thence South 0°05'30" West along the Westerly line of the said Lacock land and the Westerly line of the land conveyed to Floyd Keith Kinchelos, et al, by deed recorded January 4, 1967, Film 591, Reception No. 836383, a distance of 200.35 feet; thence South 89°57' West 217.40 feet to the West line of that tract of land described on said Film 580, Reception No. 826040, thence North 0°05'30" East 200.35 feet along the West line of that tract of land described on said Film 580, Reception No. 826040 to a point from which the TRUE POINT OF BEGINNING bears North 89°57' East; thence North 89°57' East 187.27 feet to the TRUE POINT OF BEGINNING, EXCEPT the West 30 feet thereof for road purposes.

PARCEL II:

A tract of land in the Southeast Quarter of the Northeast Quarter of Section 18, Township 1 North, Range 70 West of the 6th P.M., described as follows: Commencing at the Southeast corner of Section 18; thence North 0°08'30" West 3978.54 feet along the West line of said Section 18; thence North 89°33' East 2626.56 feet to the Northwest corner of that tract of land conveyed to Charles J. Backer as described in Deed recorded on Film 580, Reception No. 826040 of the Boulder County Records; thence North 89°57' East 187.27 feet along the North line of that tract of land described on said Film 580, Reception No. 826040, to the Northwest corner of that tract of land conveyed to Bruce W. Lacock and Ruth M. Lacock by Deed recorded April 16, 1971, Film 728, Reception No. 973035, thence South 0°05'30" West along the most Westerly line of the said land conveyed to Lacock a distance of 232.61 feet; thence North 89°57' East 30.13 feet to the Westerly line of the said land conveyed to the said Lacock, thence South 0°05'30" West along the Westerly line of said Lacock land and the Westerly line of the land conveyed to Floyd Keith Kinchelos, et al, by Deed recorded January 4, 1967, Film 591, Reception No. 836383, a distance of 200.35 feet; thence South 89°57' West 30.13 feet to the TRUE POINT OF BEGINNING;

thence South 0°05'30" West along the most Westerly line of the said Kinchelos land, a distance of 232.50 feet to the Southwest corner thereof and to the South line of that tract of land described on said Film 580, Reception No. 826040; thence South 89°53' West 187.27 feet along the South line of that tract of land described on said Film 580, Reception No. 826040 to the Southwest corner thereof; thence North 0°05'30" East 232.72 feet along the West line of that tract of land described on said Film 580, Reception No. 826040 to a point from which the TRUE POINT OF BEGINNING bears North 89°57' East; thence North 89°57' East 187.27 feet to the TRUE POINT OF BEGINNING, EXCEPT the South 30 feet thereof and the West 30 feet thereof for road purposes. All in the County of Boulder, State of Colorado.

Unofficial Copy

Recorder's Note: 12-16-97
Portion of recorded document may not reproduce legibly.

City Council and Planning Board Zoning and Infrastructure Plan

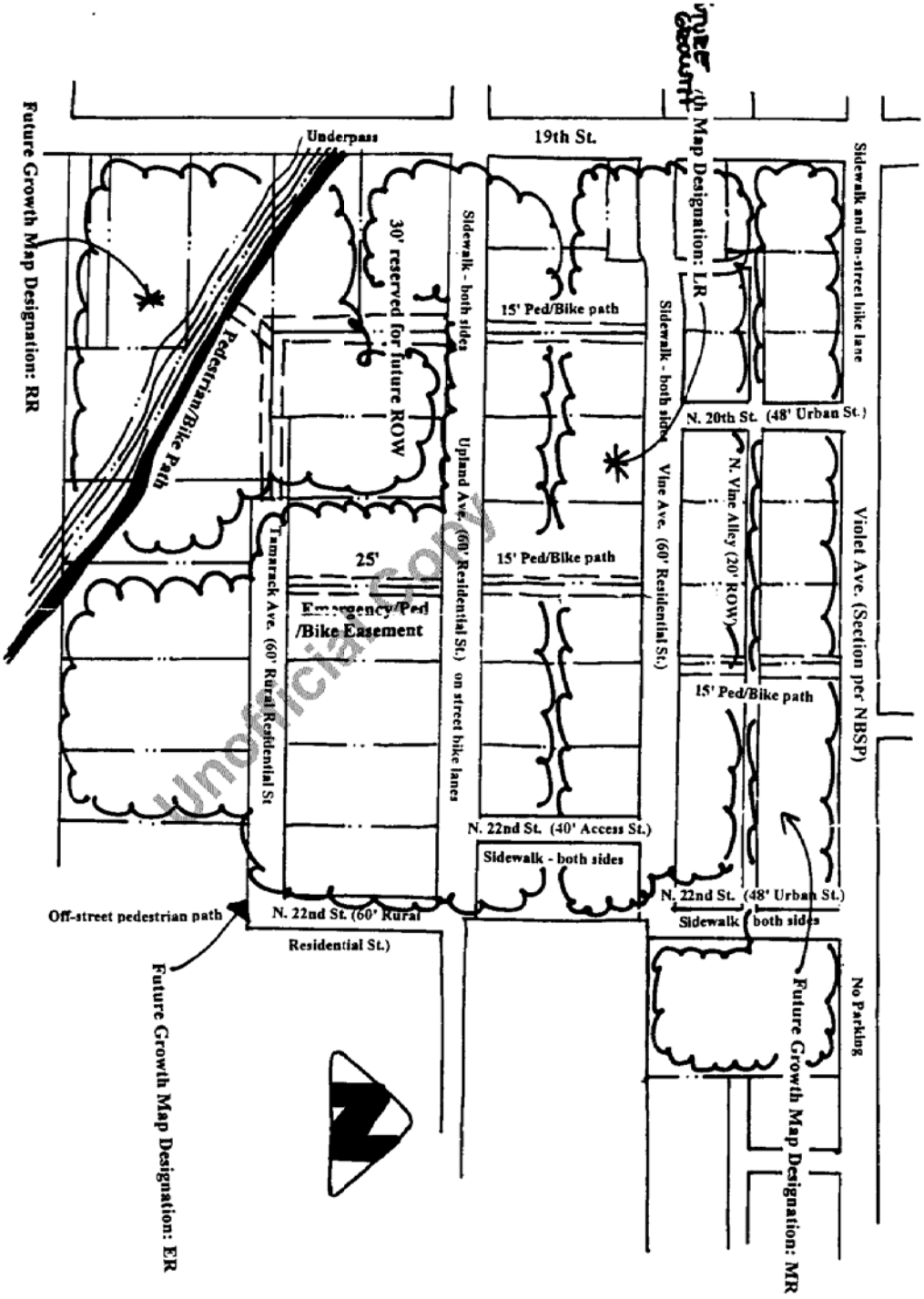

Unofficial Copy

1755859
Page: 9 of 9
12/16/1997 10:05A
Boulder County Clerk, CO RR R 46.00 D 0.00

Estimated Development Potential on Subject Properties						
Address	**Zoning**	**Approximate Area**	**# Residential Units Permitted per Zoning**	**Current Annexation Housing Requirements**		**Proposed Affordable Housing**
				Permanently Affordable	**Size Restricted***	**Permanently Affordable**
2180 Violet Ave.			**22**	**8**		**15****
	RM-2	53,764 sf	15		**4**	
	RL-1	49,118 sf	7		**1**	
2145 Upland Ave.			**3**			
	RL-1	16,650 sf	2	**1**		
	RE	19,050 sf	1			
1917 Upland Ave.			**6**	**2**		
	RL-1	37,228 sf	5		**1**	
	RE	21,450 sf	1			
Total			**31**	**11**	**6**	**15**

* Size-restricted units are affordable to the first purchaser of the unit. Subsequent sales of each property would allow the affordability restrictions to be terminated over time.

** Note that Habitat for Humanity intends to ask for additional density beyond the underlying zoning through an annexation amendment to allow 17 units of permanently affordable units.

C I T Y O F B O U L D E R
PLANNING BOARD AGENDA ITEM
MEETING DATE: December 3, 2015

AGENDA TITLE: Public hearing and consideration of a Minor Amendment to an Approved Site Plan (LUR2015-00092) to amend the approved Dakota Ridge North design standards to allow fences up to 60 inches (5 feet) in height that back onto an alley to be built to within 18 inches of the alley with a maximum of 42 inches of solid fence and a minimum of 18 inches of lattice above. The Dakota Ridge North PUD lies within the RL-2 (Residential – Low 2) and RM-1 (Residential – Medium 1) zoning districts.

Applicant: John McCarthy for the Dakota Ridge North HOA

REQUESTING DEPARTMENT:
Planning, Housing & Sustainability
David Driskell, Executive Director
Susan Richstone, Deputy Director
Charles Ferro, Development Review Manager
Chandler Van Schaack, Planner II

OBJECTIVE:
Define the steps for Planning Board consideration of this request:

1. Hear Applicant and Staff presentations
2. Hold Quasi-Judicial Public Hearing
3. Planning Board discussion
4. Planning Board action to approve, approve with conditions or deny

SUMMARY:

Proposal:	MINOR AMENDMENT to an Approved Site Plan (LUR2015-00092) to amend the approved Dakota Ridge North design standards to allow fences up to 60 inches (5 feet) in height that back onto an alley to be built to within 18 inches of the alley with a maximum of 42 inches of solid fence and a minimum of 18 inches of lattice above. The Dakota Ridge North PUD lies within the RL-2 (Residential – Low 2) and RM-1 (Residential – Medium 1) zoning districts.
Project Name:	Dakota Ridge North Design Code Amendment
Location:	0 Dakota Ridge Blvd.
Zoning:	RL-2 (Residential – Low 2) and RM-1 (Residential – Medium 1)
Comprehensive Plan:	Low and Medium Density Residential

KEY ISSUE:
Is the proposed Site Review Minor Amendment consistent with the criteria for Minor Amendments to Approved Site Plans as set forth in section 9-2-14(l), B.R.C. 1981?

BACKGROUND:

As shown below in **Figure 1**, the Dakota Ridge North PUD is located in North Boulder, north of Lee Hill Dr. and west of Broadway (the PUD boundary is marked in red). The Dakota Ridge North PUD was originally approved by Planning Board in July, 1997 (Site Review #SI-96-17) as a residential project containing 66 mixed-density housing units and a neighborhood park. The primary intent of the Dakota Ridge North development was to create a traditional, town-like setting where automobiles are de-emphasized through the placement of garages behind houses rather than in front, and where ground floor entries, front porches, landscaping and other design features are intended to create activity and interest at the pedestrian level. In order to achieve the desired architectural character and site design while still allowing for flexibility in the design of individual buildings, the original PUD approval included adoption of a Design Code, Landscape Design Guidelines and Building Coverage and Open Space Schedules. The Design Code is the primary design document and includes guidelines and requirements for a variety of building and site elements, including, without limitation, setbacks and build-to lines, porches, façade articulation, roofs, materials, windows, fences and walls, garages, open space and landscaping.

While the development has been completed largely in accordance with the adopted standards, there has been some inconsistency over the years in how the Design Code has been interpreted with regards to fence standards for properties abutting an alley (there are two alleys within the Dakota Ridge North PUD, marked in yellow in **Figure 1** below). Currently, there are at least 2 properties that have been issued fence permits in error that do not meet the approved fence standards.

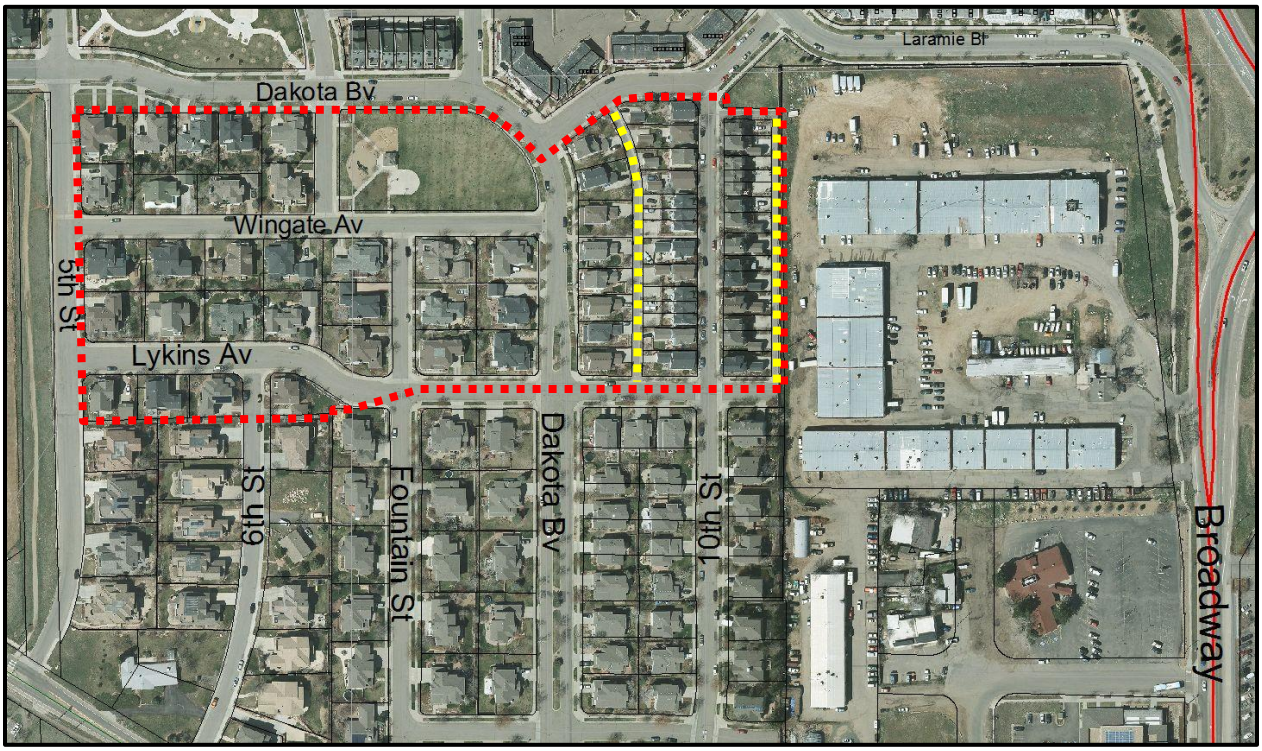

Figure 1: Vicinity Map

Project Description

The applicant is requesting to amend the adopted Dakota Ridge North Design Code (Design Code) to allow, for those properties abutting an alley, a rear yard setback of 18 inches for fences up to 60 inches in height composed of a maximum of 42 inches of of solid fencing and a minimum of 18 inches of open lattice

above. The maximum and minimum dimensions for the solid fencing andf lattice work would allow for some flexibility in terms of fence height and design while ensuring that any fence over 42 inches in height would be required to provide at least 18 inches of open lattice, thereby ensuring a high degree of transparency for fences from 42 inches up to 60 inches in height. This is a change from the current Design Code standards, which require that any fence over 42 inches in height be set back at least 15 feet from the rear property line when abutting an alley. Please see **Attachment A** for Applicant's proposed amendment package.

REVIEW PROCESS:

The proposal includes a change to the Design Code which would alter the required setback for fences in a rear yard abutting an alley by over 10 feet (from 15 feet currently to 18 inches proposed). Per the Minor Modification standards found in section 9-2-14(k)(4), B.R.C. 1981, "*Principal and accessory buildings not within an approved building envelope may be expanded or moved by no more than ten feet in any direction within the development in residential districts and lots abutting residential districts. The resulting setbacks shall not be less than the minimum allowed setback of the underlying zone.*" Because the proposed amendment would in effect change the building envelope specifically for fences in the rear yard by more than 10 feet, the current proposal exceeds the limits of a minor modification and therefore requires a Minor Amendment to the Approved Site Plan.

While typically a Site Review Minor Amendment would be a staff-level decision subject to call-up by the Planning Board or appeal by a member of the public, given the extent of the proposed changes as well as the inconsistency with which the existing Design Code has been interpreted by both city staff and the Dakota Ridge North HOA with regard to fencing, staff felt that the most appropriate process for amending the Design Code is to refer the application to the board for discussion and a final decision pursuant to section 9-2-7(b)(1), B.R.C. 1981.

KEY ISSUE:

Staff has identified the following key issue for the board's consideration:

Is the proposed Site Review Amendment consistent with the criteria for Minor Site Review Amendments to Approved Site Plans as set forth in section 9-2-14(l), B.R.C. 1981?

Section 9-2-14(l), "*Minor Amendments to Approved Site Plans*," B.R.C. 1981 includes the procedures and review criteria for approval of a minor amendment to an approved Site Review development. The criteria for a Minor Site Review Amendment require an evaluation of a project with only specific Site Review criteria of the B.R.C. 1981 subsections 9-2-14(h)(2) (A), (C), and (F), Open Space, Landscaping, and Building Design respectively. Within the context of the existing Dakota Ridge North PUD, which is already fully developed, staff finds that many of the above criteria are not applicable to the proposal. Please see **Attachment B** for staff's complete analysis of the review criteria.

Approval of a Minor Amendment also requires a finding that "*The minor amendment is found to be substantially consistent with the intent of the original approval, including conditions of approval, the intended design character and site arrangement of the development, and specific limitations on additions or total size of the building which were required to keep the building in general proportion to others in the surrounding area or minimize visual impacts.*" While the specfic rationale originally applied that resulted in requiring fences to be set back 15 feet from an abutting alley isn'y completely clear, staff finds the proposed amendment to the Design Code to be substantially consistent with the intent of the original approval and with surrounding neighborhoods.

Overall, the proposal was found to be consistent with the criteria for Minor Amendments to Approved Site Plans found in section 9-2-14(l), B.R.C. 1981. Refer to **Attachment B** for staff's complete analysis of the review criteria.

PUBLIC COMMENT:
Required public notice was provided in the form of written notifications of the application to property owners within 600 feet of the subject properties. In addition, several public notice signs were posted around the perimeter of the neighborhood. Therefore, all public notice requirements of section 9-4-3, "Public Notice Requirements," B.R.C. 1981 were met. Several phone calls were received from neighbors asking for information on the proposed project. The majority of the correspondence was general questions regarding the proposal. Staff has also been in communication with one neighbor who has expressed opposition to the proposed Design Code amendment, although their specific concerns regarding the proposal remain unclear at this time. Refer to **Attachment C** for neighborhood correspondence.

STAFF FINDINGS AND RECOMMENDATION:
Staff finds that the application for a Minor Amendment meets the criteria of section 9-2-14(l), B.R.C. 1981. Therefore, staff recommends that Planning Board approve Land Use Review # LUR2015-00092 incorporating this staff memorandum and associated review criteria as findings of fact and subject to the recommended conditions of approval.

RECOMMENDED CONDITIONS OF APPROVAL:

1. The Applicant shall ensure that the development shall be in compliance with all plans prepared by the Applicant on November 18, 2015 on file in the City of Boulder Planning Department, except to the extent that the development may be modified by the conditions of this approval.

2. The Applicant shall comply with all previous conditions contained in any previous approvals, except to the extent that any previous conditions may be modified by this approval, including, but not limited to:

    a. The Development Agreement recorded in the office of the Boulder County Clerk and Recorder at Reception No. 01779329 on March 9, 1998; and
    b. The Subdivision Agreement recorded in the office of the Boulder County Clerk and Recorder at Reception No. 01793854 on April 21, 1998.

Approved By:

David Driskell, Executive Director
Department of Community Planning and Sustainability

ATTACHMENTS:
A. Applicant's Proposed Plans
B. Staff Analysis of Review Criteria
C. Neighborhood Correspondence

ATTACHMENT A

TABLE OF CONTENTS

INTRODUCTION 1

HOW TO USE THESE GUIDELINES 1

- Residential 1
- Open Space 1
- Circulation 1

AMENDMENTS 1

LAND USES 2

- Housing Types 2
- General Requirements 2
- Large-Lot Single Family 7
- Medium and Small-Lot Single Family 7
- Duplexes and Triplexes 7

OPEN SPACE 8

- Access to the Foothills Trail 8
- Drainage Ponds 8
- Neighborhood Park 8

CIRCULATION 8

- Streets 8
- Bicycle and Pedestrian Systems 9
- Transit 9

Introduction

The primary intent of this design code is to create a community with characteristics similar to those of a traditional "town". Streets are convenient and comfortable for walking. Parks are a focus for public activity, Hopefully, this can be a place where its residents and visitors can rediscover the community of a small town. Dakota Ridge North consists of a variety of single-family homes, attached homes, and a small park. The configuration of these elements in Dakota Ridge North and the following code are meant to enhance the feeling of community, user convenience, and identity. The plan and the code also seek to create a pedestrian and bicycle-oriented community that provides for the realities of the automobile, but does not let it dominate the street or the neighborhood.

How to Use These Guidelines

In order to use this code, you must know the land use designation for your property and where it is located within Dakota Ridge North. The code is organized by land use type, and special conditions apply to lots in certain locations (e.g. - corner lots).

Residential

If your property has a residential land-use designation, you should first refer to the General Requirements under Housing Types on page 2. This contains requirements that are common to all the residential types. This section is followed by specific code requirements for each housing type in Dakota Ridge North. Also refer to the *Graphic Plan* for further requirements on your lot. This plan contains specific information for each lot, including build-to locations, setbacks, lot size, maximum building coverage limits, parking location, and affordability restrictions.

Open Space

This section describes the various open areas within the plan, and their use.

Circulation

This section should be reviewed by anyone who plans to build in Dakota Ridge North. The street network is the major public space of the community, and an understanding of the relationships that are desired between the street and the building will be key to creating a successful design.

Amendments

This Graphic Code and the appurtenant drawings may be modified from time to time. Any proposed amendment must be agreed to by the unanimous consent of the Executive Board of the Dakota Ridge North Homeowners Association. The Executive Board can then request that an Amendment be made to the approved Site Plan with the City of Boulder Planning Department. No amendment shall be approved without the consent of both the Executive Board and the Planning Department.

Land Uses

The conditions for each land use are described, a key map indicates the location of the use within the plan, a table lists the various codes, and a plan illustrates aspects of the code.

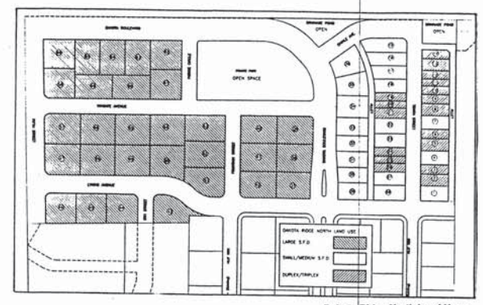

Dakota Ridge North Land Uses

Housing Types

Dakota Ridge North will create a residential neighborhood with a community identity and various degrees of affordability. The designs of the homes complement the street design.

The following residential design principles guide the design of all residences. After the general principles, there is a more detailed discussion of the residential types planned:

- Large Lot Single-Family Homes
- Medium and Small Lot Single-Family Homes
- Duplexes and Triplexes

General Requirements

When implementing this design code, it is important to remember that the houses not only serve the private needs of the residents, but also constitute an important component in the overall form and health of a neighborhood. How houses face public streets and open space is critical to the success of creating a pedestrian-oriented, town-like neighborhood. Primary ground floor entries must orient to streets, not the interior of blocks or side yards. By placing garages in the rear of lots, entries and living space put "eyes on the street" and make the neighborhood safer and more active. With garage doors hidden from public view, front entries and porches gain greater visual emphasis, breaking the front facade into more human-scaled elements. By using alleys instead of front driveways, neighborhood streets can be more densely landscaped and using alleys instead of front driveways will make more on-street parking made available.

Porches, prominent front entries and other design features serve to extend the historic patterns of Boulder residential neighborhoods. Yards and porches provide an active social edge in front of private dwellings, where people can enjoy their "outdoor living room" created by streets and yards, where they can choose to "see and be seen." Setback requirements will help to create a comfortable street edge and enable garages and parking lots to occur away from the street.

General Code Guidelines:

Requirements	*Notes	Large-Lot	Sm/Med Lot	Attached
Lot Size (Min.)				
Width (ft)		64	36	18
Depth (ft)		62	73	73
Area (sf)		6,000	2,648	1,329
Build-to Lines				
Front Yard Building (ft)		12	8	6
Building Projections (ft)	[1][3]	9	6	4
Front Yard Porch (ft)	[3]	8	4	2
Side Yard (Street) (ft)		12	8	6
Yard Setbacks (Min.)				
Front Yard Garage (ft)		40	NA	NA
Side Yard (Street) Garage (ft)		30	8	6
Side Yard Total (ft)		16	8	0
Side Yard Building (ft)		8	0 or 4	0
Side Yard Porch (ft)		4	4	0
Side Yard (Alley) (ft)		NA	4	4
Rear Yard Building (ft)		20	20	20
Rear Yard Garage/Parking (ft)		0 or 3	8	8
Back Yard Area (Min.)		NA	NA	10 X 12
Height (Max.)	[2]	35	35	35
		2+ loft Stories	2+ loft Stories	2+ loft Stories
Porches				
Depth (Min.) (ft)		8	6	6
Width (Min.) (ft)		16	12	10

Not req'd to build to the line.

* Notes

[1] Bay Windows, chimneys, balconies, and other building projections - not more than 50% of building frontage.

[2] Exclusive of chimneys, vents, etc.

[3] Second floor space allowed over porches, building projections, and garages to the building build-to and setback lines.

50% of Bldg. must go to build to line.

Brent Brown – 10/22/98

as window location and building materials are also encouraged to respond to Boulder's climate and reinforce its regional heritage.

Setbacks and Build-to Lines

This code employs both setbacks and build-to lines. The setbacks in the code set the minimum distance that is required between the building element and the property line. Build-to lines set the required distance between the building element and the property lines. A building element with a build-to requirement cannot be closer to or further from the property line. For example, a medium-lot single-family home that is located at the corner of two streets has a front build-to line for the main building (8 feet), the porch (4 feet), and any building projections (6 feet); it also has a build-to line in the side yard of 4 feet. But the same type of house on a non-corner lot would have setbacks, not build-to lines, along the side yard property lines.

Porches

Primary entries shall be accessed directly from a public street and must be visible from the street. Front doors shall be substantial in appearance and shall include clear glass lights if an adjacent window is not provided. ~~Porches are required for each unit and must be located immediately accessible to the primary entry.~~ Porches must have a minimum unobstructed width and depth as described in each residential type section. Porches shall be covered with a roof that is supported by posts; cantilevered roofs are not permitted. Posts and rails shall be substantial in appearance and shall have a nominal dimension of at least 4x4 for posts and 2x6 for rails. Porches must be illuminated at night. Porches may be counted for on-lot Open Space for city calculation purposes if there is no living space in floors above.

Example Porch in Boulder

Facade Articulation

In addition to the required porch, the front elevation of all homes shall contain at least one of the following: bay window, dormer window, or balcony (balcony over porch permitted). The use of a variety of these features on various units will add to the character and interest of the neighborhood. Reveals and recesses shall be used to reduce the apparent size of facades and establish rich shadow lines. These should occur at windows, doors eaves, gable vents, etc.

Example of Facade Articulation in Boulder

Roofs

Roofs shall be hipped or gabled. Gabled roof ends are strongly encouraged facing the street. The profile created by roof forms shall be simple with no unnecessary changes in roof plane. Roof configuration shall reflect a building's floor plan, massing and use. The slope of primary roofs shall range between 10:12 and 12:12. Overhangs, porches, and eaves may break to a minimum 6:12 slope. Wood shingles are prohibited. Heavy asphalt shingles or standing seam metal roofs are required.

Materials

General Exterior Finishes: Materials shall reflect Boulder's climate and building tradition and convey a sense of permanence and durability. Wood board siding, stucco, stone and/or brick shall be used; T-111 plywood or equivalent sidings shall not be used. To avoid the appearance of a false appliqué, material changes shall not occur at exterior corners or along flat planes. Material changes shall occur at interior corners or at major reveals (e.g. - chimneys, engaged columns, etc.), see illustration.

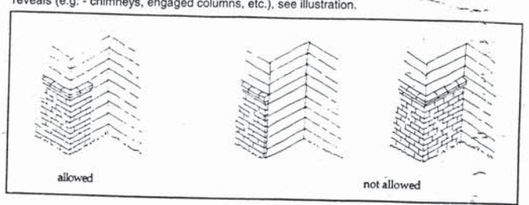

Exterior Materials Changes

The primary exterior finish, whether wood or stucco, must be used on all facades, "false" fronts are not allowed (i.e. - if the front facade is primarily wood, the other facades must be wood not stucco). Also, the trim treatment of windows and doors, the design of eaves, and other architectural details must be treated consistently on all facades.

Windows: Windows should have traditional proportions; they shall have a height greater than or equal to their width, preferably with classical proportions (e.g. 2:1, 3:2, and 4:3). Window frames with metallic finishes are not permitted.

Fences and Walls

Two types of fences are allowed within the residential neighborhoods: 42" high "open" fences and "privacy" fences. Refer to the *Landscape Requirements* for permitted fence designs.

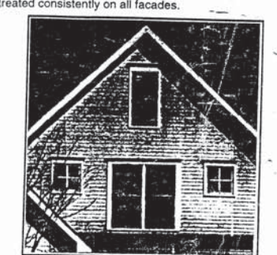

Example Window in Boulder

Privacy Fences and Walls: Privacy fences may be up to 5 feet high and shall be built out of attractive, long lasting materials, such as: wood, masonry, or stone. Privacy fences may be located along interior lot lines must be set back a minimum of 30 feet from the front property line and a minimum of 15 feet from the rear property line when there is an alley.

Fences: All other fences shall be not more than 3 foot 6 inches in height, and shall be primarily wood with the exception of corner posts and gate posts which may be masonry or stone. Fences shall be constructed only of these materials: All posts must be masonry, stone or wood. Rails must be wood. Permitted styles are: 1) post and rail, 2) Wood frame with vinyl coated metal fabric, and 3) picket. A possible alternative to a fence is a planted hedge, which shall be maintained at a maximum height of 3 feet - 6 inches.

Fences or hedges can be located at the back of sidewalk along the front or exposed side of a lot. They may also be located along the right-of-way. Picket fences must be set 18" back from any adjacent public walk.

Zero-Lot Line Conditions

Both the Medium-Lot and Small-Lot Single-Family homes are allowed to have one side that has no setback from the property line (i.e. - a "zero-lot line" condition). In no case should a wall "zero" on a side yard that is adjacent to a public street or alley. This means that at least one home in a string of homes along a block must have a setback on one side that the "zeroed" lot line can be shifted from one end of a block to the other. Lots adjacent to "zeroed" lot lie will grant a five-foot maintenance easement for the benefit of the owner of the zero-lot lot line house.

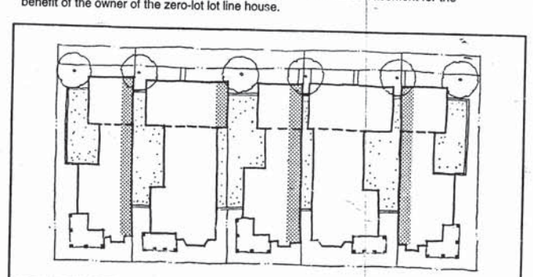

Shifting The "Zeroed" Lot Line

Amended 12/2015 (LUR2015-00092): Fences up to 5 feet in height that back onto an alley may be built to within 18 inches of the alley if the fence is comprised of no more than 42 inches of solid fence and a minimum of 18 inches of lattice above (See Diagram below). Solid fences over 42 inches in height must be setback a minimum of 15 feet from an alley.

Fences located on or within three feet of a retaining wall, where both the fence and retaining wall are on the same property, shall be regulated according to the applicable City of Boulder fence standards, incorporating the design requirements included herein.

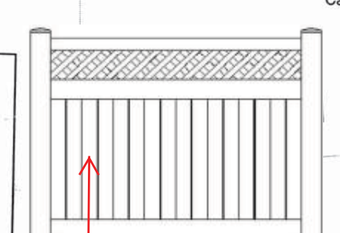

5 foot maximum height; maximum 42 inches of solid fence and a minimum of 18 inches of lattice above.

Design Code

Dakota Ridge North
Boulder, Colorado

Core Corporation
Boulder, Colorado

Calthorpe Associates
Berkeley, California

December, 1997

Dakota Ridge North

Dakota Ridge Joint Venture
2041 Broadway, 2nd Floor
Boulder, Colorado 80302

2/3

Core Corporation
2041 Broadway
2nd Floor
Boulder, Colorado
80302

Drawn by: RLH
Date: 2/14/98

Dakota RIDGE

Garages
Parking for two vehicles must be provided on each lot. Garages are placed away from the front of the house. An *Allowable Parking Zone* for each lot is illustrated on the accompanying *Design Code Plan.* No garage may be larger than a three-car garage, and three-car garages are required to have at least two garage doors. The setback requirements and other specific conditions of garage design are discussed in the specific housing type sections. All garages shall have a twenty feet minimum depth.

Large-Lot Single Family
These are the largest Lots within Dakota Ridge North. They are located West of Dakota Blvd. Garages may be attached or detached but must be within the parking zone shown on the *Graphic Plan.* "Zero" lot lines may not be used. The landscape requirements for these lots are in *Exhibit C* of *The HOA Declarations and Covenants.*

Driveways
Garages on the lots are set to the rear of the lot and served by a side-loaded driveway from the street. The garage shall be set back at least forty feet from the front property line and accessed by a driveway with eight-foot maximum total width. There shall be a two-foot minimum width landscaped area on both sides of the driveway. The driveway must extend at least twelve feet from the from the front property line, after which it may widen into a paved court providing full-width access to the doors of the garage. Garages accessed from a street other than the street on which the house fronts shall be setback at a minimum of thirty feet from the property line along the accessed side street. Driveways shall be as unobtrusive as possible. Driveways may be of a "two-track" style and constructed of turf blocks or other materials as approved by the Dakota Ridge North Homeowner Association Architectural Control Committee.

Medium and Small-Lot Single Family
The Medium and Small Lot Single Family homes are the most affordable of the detached homes within Dakota ridge North. These homes may have a zero-lot line conditional upon the stipulations outlined in *General Conditions* above. The landscape requirements for these lots are in *Exhibit C* of *The HOA Declarations and Covenants*

Garages, Parking Areas, and Aprons

Garages situated on alleys do not have driveways. A paved apron extends from the edge of alley to the face of garage. A planting area is required between the aprons serving adjacent garage doors to maximize the amount of landscaping within the alleys. The face of the garage or the parking area shall be setback eight feet from the rear property line, with either a zero or three foot minimum side yard setback.

Duplexes and Triplexes
Townhouses are attached single-family homes providing an additional level of affordability within Dakota Ridge North. They are located along both sides of Tenth Street. All relevant side-yard setbacks apply to the end sides of each building. Triplexes are required to be fire-protected by internal sprinklers. The landscape requirements for these lots are in *Exhibit C* of *The HOA Declarations and Covenants*

Open Space

The open spaces within Dakota Ridge North provide access to the adjacent Foothills Trail, temporary storage for storm water run-off, and a private one-acre park located in the center of the community.

Access to the Foothills Trail
Pending approval by the department of Open Space, two pedestrian/bicycle gates will be provided along Fifth Street as access points to the adjacent Foothills Trail. These will be the only direct access points from Dakota Ridge North, controlled by a post and wire fence.

Drainage Ponds
There are two drainage detention ponds along the north edge of Dakota Ridge North. These are intended to be temporary, pending the construction of the planned Dakota Ridge Village on the property immediately north of the subdivision. In the event of an unusually drenching thundershower, these ponds will temporarily fill to a depth of three feet, before releasing the runoff into Six-Mile Canyon Creek downstream.

Neighborhood Park
The neighborhood park provides open space recreational opportunities in the heart of Dakota Ridge North. A tot lot, shelter, and half basketball court could be located in this park, along with open turfed areas. This park will be owned and maintained by the Homeowner Association. No lighting is permitted in the park without City Manager approval.

Circulation
The circulation system within Dakota Ridge North creates a network of streets with multiple routes and connections between local destinations. The street network fulfills the goals outlined in the city's *North Boulder Infrastructure Plan* and the *North Boulder Subcommunity Plan.* Bicycle and pedestrian connections to the Foothills Trail promote off-street access to points South.

Streets
The following circulation indicates the different street sections. Four major Access Streets will connect the neighborhood to adjacent neighborhoods: Dakota Boulevard, Fifth Street, Lykins Avenue, and Chinle Avenue. Between these streets, Tenth Street, Fountain Street, Pierre Circle, and Wingate Avenue access the fronting residences.

Residential Collector
The Residential Collector (Dakota Ridge Boulevard) is designed as the main link between Dakota Ridge North and Lee Hill Road. In the future, it will provide access to the Dakota Ridge Village Center. The street section has five-foot wide sidewalks, an eight foot tree lawn, and paved section of thirty-two feet curb to curb.

Residential Streets
These streets are the "bones" of the intra-neighborhood transportation scheme: they directly connect to adjacent streets, existing and planned. A four-foot wide attached sidewalk borders a thirty-two foot street section, providing ample parking on both sides of the street.

Access Streets
Access Streets connect the homes of the neighborhood with the surrounding street network. Four-foot sidewalks border a twenty-six foot drive section. The narrow section discourages speeding and creates a visually confined street section.

Alley
Alleys accommodate rear-loaded garages. Alley loaded garages minimize the need for curb cuts, maximizing opportunities for on-street parking, and place the house on the whole of the street frontage. Alleys are used for auto access to the garages, pedestrians, and city-franchised utilities. The drive shall be 12 feet wide with an inverted crown to contain drainage. Garages shall set back eight feet from the alley R.O.W. Alley landscaping shall be maximized and trees planted when not interfering with back-up clearance or sight lines.

Bicycle and Pedestrian Systems
Connections to the adjacent regional multi-use Foothills Trail shall be provided at two points along Fifth Street. Continuing south on Fountain Street leads to a low-traffic corridor connecting with the eventual Four-Mile Canyon Creek Greenway. All streets a re fronted by sidewalks with a minimum four-foot wide width.

Transit
The neighborhood is served by high-frequency *Skip* mini-bus service. The north terminus for the *Skip* route is at the corner of Broadway and Front Range Avenue.

2/9/99 12:31 PM

Exhibit A

Dakota Ridge East & West
3rd Filing
Building Coverage and Open Space Schedule:

500 FA @ 80%
800 Rect. @ 120%
750 Rect. @ 110%
27.76% Unrest. Cvg.

Note: Covered Porches & Balconies are Open Space

Lot No.	# of Units	Affordable Description	Lot Size (sf)	House Coverage	Parking Coverage	Maximum House Fl. Area	Open Space Provided	Open Space Required	ROW OS Credit	Excess Open Space Provided
1	1	Restricted - Detached SF	2,844	750	380	1,600	1,714	(3,000)	300	(986)
2	1	Restricted - Detached SF	2,260	600	380	1,500	1,280	(3,000)	300	(1,420)
3	1	Perm. Afford. - Attached SF	1,749	500	298	1,500	951	(3,000)	300	(1,749)
4	1	Restricted - Detached SF	2,549	750	380	1,600	1,419	(3,000)	300	(1,281)
5	1	Restricted - Detached SF	2,257	600	380	1,500	1,277	(3,000)	300	(1,423)
6	1	Perm. Afford. - Attached SF	1,748	500	298	1,500	948	(3,000)	300	(1,752)
7	1	Restricted - Detached SF	2,548	750	380	1,600	1,416	(3,000)	300	(1,284)
8	1	Restricted - Detached SF	2,254	600	380	1,500	1,274	(3,000)	300	(1,426)
9	1	Perm. Afford. - Attached SF	1,744	500	298	1,500	944	(3,000)	300	(1,756)
10	1	Perm. Afford. - Attached SF	1,598	500	298	1,500	800	(3,000)	300	(1,900)
11	1	Perm. Afford. - Attached SF	1,307	500	298	1,500	509	(3,000)	300	(2,191)
12	1	Perm. Afford. - Attached SF	1,597	500	298	1,500	799	(3,000)	300	(1,901)
13	1	Restricted - Detached SF	2,250	600	380	1,500	1,270	(3,000)	300	(1,430)
14	1	Perm. Afford. - Attached SF	1,717	500	298	1,500	919	(3,000)	300	(1,781)
15	1	Restricted - Detached SF	4,374	800	380	1,600	3,094	(3,000)	300	394
16	1	Restricted - Detached SF	3,555	800	380	1,600	2,375	(3,000)	300	(325)
17	1	Restricted - Detached SF	3,176	800	380	1,600	1,996	(3,000)	300	(704)
18	1	Restricted - Detached SF	2,986	800	380	1,600	1,786	(3,000)	300	(914)
19	1	Perm. Afford. - Attached SF	1,827	500	298	1,500	1,029	(3,000)	300	(1,671)
20	1	Perm. Afford. - Attached SF	1,494	500	298	1,500	696	(3,000)	300	(2,004)
21	1	Perm. Afford. - Attached SF	2,200	500	298	1,500	1,402	(3,000)	300	(1,298)
22	1	Restricted - Detached SF	3,278	750	380	1,500	2,148	(3,000)	300	(552)
23	1	Restricted - Detached SF	2,905	600	380	1,500	1,925	(3,000)	300	(775)
24	1	Perm. Afford. - Attached SF	1,826	500	298	1,500	1,028	(3,000)	300	(1,672)
25	1	Perm. Afford. - Attached SF	1,494	500	298	1,500	696	(3,000)	300	(2,004)
26	1	Perm. Afford. - Attached SF	1,826	500	298	1,500	1,028	(3,000)	300	(1,672)
27	1	Restricted - Detached SF	2,905	600	380	1,500	1,925	(3,000)	300	(775)
28	1	Restricted - Detached SF	3,237	750	380	1,500	2,107	(3,000)	300	(593)
29	1	Restricted - Detached SF	3,367	650	380	1,600	2,337	(3,000)	300	(363)
30	1	Restricted - Detached SF	3,133	800	380	1,600	1,853	(3,000)	300	(747)
31	1	Restricted - Detached SF	3,244	650	380	1,600	2,214	(3,000)	300	(486)
32	1	Restricted - Detached SF	3,318	800	380	1,600	2,138	(3,000)	300	(562)
33	1	Restricted - Detached SF	3,060	800	380	1,600	2,780	(3,000)	300	80
34	1	Restricted - Detached SF	4,734	800	380	1,600	3,554	(3,000)	300	854
35	1	Restricted - Detached SF	4,536	800	380	1,600	3,356	(3,000)	300	656
36	1	Restricted - Detached SF	4,865	800	380	1,600	3,685	(3,000)	300	985
37	1	Unrestricted	6,040	1,246	400	4,139	4,394	(6,000)	600	(1,006)
38	1	Unrestricted	6,519	1,374	400	4,523	4,735	(6,000)	600	(665)
39	1	Unrestricted	6,654	1,414	400	4,641	4,840	(6,000)	600	(560)
40	1	Unrestricted	6,613	1,403	400	4,608	4,810	(6,000)	600	(590)
41	1	Unrestricted	6,645	1,411	400	4,634	4,834	(6,000)	600	(566)
42	1	Unrestricted	6,412	1,348	400	4,443	4,664	(6,000)	600	(736)
43	1	Unrestricted	6,342	1,328	400	4,386	4,613	(6,000)	600	(787)
44	1	Unrestricted	6,037	1,246	400	4,137	4,391	(6,000)	600	(1,009)
45	1	Unrestricted	6,022	1,241	400	4,124	4,381	(6,000)	600	(1,019)
46	1	Unrestricted	6,022	1,241	400	4,124	4,381	(6,000)	600	(1,019)
47	1	Unrestricted	7,069	1,537	400	4,991	5,142	(6,000)	600	(258)
48	1	Unrestricted	7,031	1,516	400	4,949	5,115	(6,000)	600	(285)
49	1	Unrestricted	7,031	1,516	400	4,949	5,115	(6,000)	600	(285)
50	1	Unrestricted	7,261	1,579	400	5,138	5,282	(6,000)	600	(118)
51	1	Unrestricted	6,896	1,479	400	4,838	5,016	(6,000)	600	(384)
52	1	Unrestricted	6,971	1,500	400	4,900	5,071	(6,000)	600	(329)
53	1	Unrestricted	7,018	1,513	400	4,939	3,105	(6,000)	600	(295)
54	1	Unrestricted	7,053	1,522	400	4,967	5,131	(6,000)	600	(269)
55	1	Unrestricted	7,031	1,516	400	4,949	5,115	(6,000)	600	(285)
56	1	Unrestricted	7,031	1,516	400	4,949	5,115	(6,000)	600	(285)
57	1	Unrestricted	7,183	1,558	400	5,074	5,225	(6,000)	600	(175)
58	1	Unrestricted	6,158	1,279	400	4,236	4,479	(6,000)	600	(921)
59	1	Unrestricted	6,094	1,261	400	4,183	4,433	(6,000)	600	(967)
60	1	Unrestricted	6,094	1,261	400	4,183	4,433	(6,000)	600	(967)
61	1	Unrestricted	6,341	1,328	400	4,385	4,613	(6,000)	600	(787)
62	1	Unrestricted	6,296	1,316	400	4,248	4,580	(6,000)	600	(820)
63	1	Unrestricted	6,030	1,244	400	4,131	4,386	(6,000)	600	(1,014)
64	1	Unrestricted	6,030	1,244	400	4,131	4,386	(6,000)	600	(1,014)
65	1	Unrestricted	6,030	1,244	400	4,131	4,386	(6,000)	600	(1,014)
66	1	Unrestricted	5,622	1,289	400	4,292	4,530	(6,000)	600	(870)
	66	Total Residential Lots	292,799	64,622	24,614	191,616	203,473	(288,000)	28,800	(55,727)
OL"A"	0	Temporary Detention Pond #1	7,629	0	0	0	7,629	0	0	7,629
OL"B"	0	Temporary Detention Pond #2	5,590	0	0	0	5,590	0	0	5,590
OL"C"	0	Neighborhood Park - HOA	42,508	0	0	0	42,508	0	0	42,508
OL"D"	0	Landscaped Island - HOA	579	0	0	0	0	0	0	0
4	0	Total Outlots "A", "B", "C", & "D"	56,306	0	0	0	55,727	0	0	55,727
70	66	Total Project	349,015	64,622	24,614	191,616	259,200	(288,000)	28,800	0

Page 1 of 1

Hardy Original Regional Park Dedication Land Dedication Fee Paid Cash in Lieu

Dakota Ridge North Landscape Requirements

AREA
- The area required to be landscaped by the buyer in accordance with these requirements includes all of the front yard from the curb to the house facade and along the side yards to 3'-0" behind the front face of the house, and from side property line to side property line.
- The entire lot area must be landscaped. The areas required to meet fencing, grading and soil requirements as described in these requirements includes the entire lot including easements and the area in rights-of-way immediately adjacent to the lot.

FENCES
- Fences are not required.
- Fences to a maximum of 42" in height are permitted in required yards abutting a street, may not be located in the public rights-of-way, and shall be at least 18" from a public sidewalk.
- Front Yards: Fences in front yards may not be over 42" in height. All fences in the front yard must be of the same height. Transition to a higher back yard fence must take palace at least three feet behind the Build-to line of the house as defined by the graphic code. Metal fabric fences are not permitted in front yards.
- Back Yards: Fences up to 60" in height are permitted in backyards except where abutting a street. Back yard fences placed in the side yard setbacks must be set at a minimum of three feet behind the front Build-to line as defined by the *Graphic Code.* Metal fabric fences, if used, must be vinyl coated or painted. Posts and rails on all fences must be wood.
- Fences shall be constructed only of these materials: All posts must be masonry, stone or wood. Rails must be wood. Permitted styles are:
  1) post and rail
  2) wood frame with vinyl coated or painted metal fabric
  3) picket

  All wood must be treated with a stain or paint.
- Solid fences must be set back the same distances as their height south of any public walk.
- All fences must conform to the *Design Code* and to any other sub-division standard details.
- The HOA Architectural Control Committee shall approve all fence designs before construction. Submit a plan and elevation at scale of 1/4"= 1.0' or larger for approval before starting construction. This submittal may be done in conjunction with the Landscape Plan as required below. Property owner is responsible for all City of Boulder permits required for construction.

Amended 12/2015: Fences up to 5 feet in height that back onto an alley may be built to within 18 inches of the alley if the fence is comprised of no more than 42 inches of solid fence and a minimum of 18 inches of lattice above. Solid fences over 42 inches in height must be setback a minimum of 15 feet from an alley.

SOIL
- Prior to excavation, all lots must stockpile and protect topsoil from the top 4" of the site.
- All lots must re-spread evenly the original stock-piled topsoil.
- At the time of landscaping, 1" min. of cow/peat, commercial compost, or organic topsoil must be added prior to planting.
- All final grades must be 1-1/2" lower than the adjacent pavement.

GRASS
- Lawns (except Buffalo Grass) cannot be planted within 3 feet of house and garage foundations.
- Blue or Rye grass is limited to 75% of the front yard landscape area.
- Tall Fescue or Buffalo Grass lawns are not limited and are encouraged.
- For at least 30% of their perimeter, lawns must attach to walls, walks, drives, property lines or fences.
- Top of grade prior to seeding, sodding or mulching must be at least 1-1/2" lower than adjacent pavement or edger.

PRIVACY SCREENS
- Privacy screens may be built within the building setbacks as shown on the *Design Code Master Plan*, to a maximum of 6' height and 25' length.
- Privacy screens must be faced and trimmed to match the house.
- All privacy screens must conform to the *Design Code* and any other sub-division standard details.
- Privacy Screens are not permitted in any setback.

MULCH
- Mulch consists of a 3-4" depth of rock, cobble, stone, wood or bark chips over geo-textile fabric. Plastic is prohibited. All areas not covered with grass must be mulched.
- Mulch cannot exceed 50% of landscaped area.
- Use of any single type of graded rock under 2" is not permitted. A variety of rock sizes in each individual bed is encouraged.
- Use of any type of wood or bark chips cannot exceed 70% of the mulched area. Wood product mulch should be placed only where it protected from the wind.

BORDERS
- Minimize the demarcation of the property line in front yards by using similar materials on each side. Within two feet of lot lines, adjacent lots must utilize the same ground cover material (except where there is a solid fence). First use dictates.
- The planting strip between curb and walk must be at least 80% grass. Any other plantings cannot exceed 12" height, except street trees.

SHRUBS/GROUND COVERS
- *Single Family West of Dakota Boulevard:* Each lawn must have at least three #5 shrubs over 5' height at maturity, five #5 shrubs under 5' height at maturity and twenty #1 shrubs, ground covers or perennial flowers under 12" height. At least 25% of all front yard shrubs and ground covers should be planted in a bed not attached to the house.
- *Single Family East of Dakota Boulevard:* Each lawn must have at least one #5 shrubs over 5' height at maturity, three #5 shrubs under 5' height at maturity and five #1 shrubs, ground covers or perennial flowers under 12" height.
- *Townhouses and smaller units in a duplex East of Dakota Boulevard:* Each lawn must have at least two #5 shrubs under 5' height at maturity and five #1 shrubs, ground covers or perennial flowers under 12" height.
- Shrubs cannot be planted closer than three feet to any adjacent wall, walk, or curb. Shrubs include wood ground cover shrubs.
- At least 40% but not over 60% of all shrubs must be deciduous.

TREES
- *Single Family West of Dakota Boulevard:* The front yard of each house must have at least two 1-1/2" caliper ornamental trees limited to Crabapples and Hawthorns of any species variety, Ginnala Maples, Chokecherries, or 5' Ponderosa Pines, or substitutions from the approved City of Boulder small tree list.
- Do not plant ornamental or evergreen trees within 8' of walks, walls, or paved areas.
- Do not plant ornamental or evergreens closer than 10' O.C.
- Do not plant Hawthorns in juniper beds.
- Do not plant shade trees closer than 15' O.C.
- Plant quantity exceptions for tree quantities due to corner or narrow lots are shown on the development plan.

XERISCAPE
- The use of drought tolerant and native species is highly encouraged.

DESIGN
- Before landscape construction, each house must submit to architectural control committee for approval a landscape front yard design. This plan shall be at a scale of 1" = 10' or larger. Each must include:
  - Location, type and size of all plant material.
  - Location and type of seed and sod.
  - Location and type of mulch beds.
  - Planting details.
  - Fence details and location.
  - Soil improvement type.
  - Location and type of edger.

IRRIGATION
- Zoned automatic irrigation systems are highly encouraged as an option on all lots.

TIMING
- All front yard landscaping will be completed within 120 days from the time of issuance of the Certificate of Occupancy, except for completions between November 15 and April 15 which shall be landscaped by the following May 15.

GRADING PLAN
- Landscape must conform to the grading and drainage plans accepted by the city. All swales must maintain free flow from adjacent uphill locations into adjacent downhill receptors. Direct runoff away from all structures. Maintain the percentage of grade indicated on *the Master Drainage Plan.* Interpolate flow-line elevations precisely between the fixed elevation points on the engineering plans.

STREET TREES
In addition, to these requirements, there will be two-inch caliper street trees planted along the streets and alleys in accordance with the *Graphic Code Master Plan* (+/- 10' to avoid drives and water meters). Property owners are responsible for the irrigation and maintenance of these trees. Property owner and their successors are required to keep these trees alive for a period of five years. Consult with the homebuilder regarding warranty, if any. In the event of replacement, trees must be selected from the City Forester's *Approved List.*

1003921

Dakota Ridge North

Dakota Ridge Joint Venture
2041 Broadway, 2nd Floor
Boulder, Colorado 80302

3/3

Minor Amendments to Approved Site Plans
Section 9-2-14 (l), B.R.C. 1981

(1) Standards: Changes to approved building location, or additions to existing buildings which exceed the limits of a minor modification, may be considered through the minor amendment process, if the following standards are met:

The proposal includes a change to the Design Code which would alter the required setback for fences in a rear yard abutting an alley by over 10 feet (from 15 feet currently to 18 inches proposed). Per the Minor Modification standards found in section 9-2-14(k)(4), B.R.C. 1981, "*Principal and accessory buildings not within an approved building envelope may be expanded or moved by no more than ten feet in any direction within the development in residential districts and lots abutting residential districts. The resulting setbacks shall not be less than the minimum allowed setback of the underlying zone.*" Because the proposed amendment would in effect change the building envelope specifically for fences in the rear yard by more than 10 feet, the current proposal exceeds the limits of a minor modification and therefore requires a Minor Amendment to the Approved Site Plan.

(A) In a residential zone as set forth in section 9-5-2, "Zoning Districts," B.R.C. 1981, all approved dwelling units within the development phase have been completed;

Standard met. All of the approved dwelling units within Dakota Ridge North have been completed.

(B) In residential zones, dwelling unit type is not changed;

Standard met. No changes to dwelling unit type are proposed.

(C) The required open space per dwelling unit requirement of the zone is met on the lot of the detached dwelling unit to be expanded, and

Not applicable, as the proposal does not include expansion of any dwelling units; however, all of the open space requirements are being met within the PUD.

(D) The total open space per dwelling unit in the development is not reduced by more than ten percent of that required for the zone; or

Standard met. There will be no reduction in open space per dwelling unit within the development.

(E) If the residential open space provided within the development or an approved phase of a development cannot be determined, the detached dwelling unit is not expanded by more than ten percent and there is no variation to the required setbacks for that lot;

Not applicable, as the residential open space is not being reduced.

(F) For a building in a nonresidential use module, the building coverage is not increased by more than twenty percent, the addition does not cause a reduction in required open space, and any additional required parking that is provided, is substantially accommodated within the existing parking arrangement;

Not applicable, as the Dakota Ridge North PUD is located within a residential use module (R2).

(G) The portion of any building over the permitted height under section 9-7-1, "Schedule of Form and Bulk Standards," B.R.C. 1981, is not increased;

Standard met. No change to any building height regulated under section 9-7-1, "Schedule of

Form and Bulk Standards," B.R.C. 1981, is proposed.

(H) The proposed minor amendment does not require public infrastructure improvements or other off-site improvements.

Standard met. The proposal does not require public infrastructure improvements or other off-site improvements.

(2) Amendents to the Site Review Approval Process: Applications for minor amendment shall be approved according to the procedures prescribed by this section for site review approval, except:

(A) If an applicant requests approval of a minor amendment to an approved site review, the city manager will determine which properties within the development would be affected by the proposed change. The manager will provide notice pursuant to subsection 9-4-3(b), B.R.C. 1981, of the proposed change to all property owners so determined to be affected, and to all property owners within a radius of six hundred feet of the subject property.

Standard met. All of the property owners within the Dakota Ridge North PUD and within 600 feet of the PUD boundary have been mailed notice of the proposed Minor Amendment in accordance with subsection 9-4-3(b), B.R.C. 1981.

(B) Only the owners of the subject property shall be required to sign the application.

Per the Declaration of Covenants, Conditions and Restrictions for Dakota Ridge North Subdivision, sections 3.7.1 – 3.7.3, the Executive Board of the Dakota Ridge North HOA is appointed attorney-in-fact for property owners within the PUD and has the right, without consent or joinder of the owners, to enter into or grant contracts and agreements. Further, the Executive Board has the right, upon unanimous vote, to petition the City of Boulder for amendments to the approved Site Plan, Design Code Plan and Booklet on record with the Planning Department. The subject application was submitted and signed by John McCarthy, president of the Dakota Ridge North HOA, and included a signed letter indicating that the Board of Directors of the HOA voted to file the application. Standard met.

(C) The minor amendment shall be found to comply with the review criteria of subparagraphs (h)(2)(A), (h)(2)(C), and (h)(2)(F) of this section, and

Subparagraphs (h)(2)(A), (h)(2)(C), and (h)(2)(F) of this section contain review criteria pertaining to Open Space; Landscaping; and Building Design, Livability, and Relationship to the Existing or Proposed Surrounding Area, respectively. Within the context of the existing Dakota Ridge North PUD, which is already fully developed, staff finds that many of the above criteria are not applicable to the proposal. An analysis of the applicable review criteria is included below:

(2) Site Design: Projects should preserve and enhance the community's unique sense of place through creative design that respects historic character, relationship to the natural environment, multi-modal transportation connectivity and its physical setting. Projects should utilize site design techniques which are consistent with the purpose of site review in Subsection (a) of this section and enhance the quality of the project. In determining whether this subsection is met, the approving agency will consider the following factors:

(A) Open Space: Open space, including, without limitation, parks, recreation areas and playgrounds:

i. Useable open space is arranged to be accessible and functional and incorporates quality landscaping, a mixture of sun and shade and places to gather;

Standard met. The proposed Design Code amendment will not have any

noticeable effect on the shared open space within the development, as it applies only to open space in rear yards of properties abutting an alley. In those cases, the proposed amendment will not affect landscaping or the amount of sun or shade on an individual's property.

ii. *Private open space is provided for each detached residential unit;*

Standard met. This proposal will not affect the existing private open space with the development.

iii. *The project provides for the preservation of or mitigation of adverse impacts to natural features, including, without limitation, healthy long-lived trees, significant plant communities, ground and surface water, wetlands, riparian areas, drainage areas and species on the federal Endangered Species List, "Species of Special Concern in Boulder County" designated by Boulder County, or prairie dogs (Cynomys ludiovicianus), which is a species of local concern, and their habitat;*

Not applicable, as the project as a whole (the Dakota Ridge North PUD) has already been fully completed, and the proposed Design Code amendment will not affect the built environment other than to reduce the required setback for fences within the rear yard of properties abutting an alley.

iv. *The open space provides a relief to the density, both within the project and from surrounding development;*

Standard met. The proposal to allow for fences up to a height of 6 feet with 18 inches of lattice work on top to be set back 18 inches from an alley will allow the existing rear yard open spaces to continue to provide an open feel and a relief from density for the homeowners.

v. *Open space designed for active recreational purposes is of a size that it will be functionally useable and located in a safe and convenient proximity to the uses to which it is meant to serve;*

Not applicable, as the project as a whole (the Dakota Ridge North PUD) has already been fully completed, and the proposed Design Code amendment will not affect the existing common open space or built environment other than to reduce the required setback for fences within the rear yard of properties abutting an alley. The existing common open space area will not be affected by the proposed change.

vi. *The open space provides a buffer to protect sensitive environmental features and natural areas; and*

Not applicable, as the project as a whole (the Dakota Ridge North PUD) has already been fully completed, and the proposed Design Code amendment will not affect the existing common open space or built environment other than to reduce the required setback for fences within the rear yard of properties abutting an alley.

vii. *If possible, open space is linked to an area- or city-wide system.*

Not applicable, as the project as a whole (the Dakota Ridge North PUD) has already been fully completed, and the proposed Design Code amendment will not affect the existing common open space or built environment other than to reduce the required setback for fences within the rear yard of properties abutting an alley.

(B) Open Space in Mixed Use Developments (Developments That Contain a Mix of Residential and Nonresidential Uses):

i. The open space provides for a balance of private and shared areas for the residential uses and common open space that is available for use by both the residential and nonresidential uses that will meet the needs of the anticipated residents, occupants, tenants and visitors of the property; and

Not applicable, as the existing development is entirely residential.

ii. The open space provides active areas and passive areas that will meet the needs of the anticipated residents, occupants, tenants and visitors of the property and are compatible with the surrounding area or an adopted plan for the area.

Not applicable, as the existing development is entirely residential.

(C) Landscaping:

i. The project provides for aesthetic enhancement and a variety of plant and hard surface materials, and the selection of materials provides for a variety of colors and contrasts and the preservation or use of local native vegetation where appropriate;

Not applicable, as the project as a whole (the Dakota Ridge North PUD) has already been fully completed, and the proposed Design Code amendment will not affect the approved landscaping or built environment other than to reduce the required setback for fences within the rear yard of properties abutting an alley. Individual properties will still be required to comply with the approved Landscape Design Guidelines and with City landscaping requirements.

ii. Landscape design attempts to avoid, minimize or mitigate impacts on and off site to important native species, healthy, long lived trees, plant communities of special concern, threatened and endangered species and habitat by integrating the existing natural environment into the project;

Not applicable, as the project as a whole (the Dakota Ridge North PUD) has already been fully completed, and the proposed Design Code amendment will not affect the approved landscaping or built environment other than to reduce the required setback for fences within the rear yard of properties abutting an alley. Individual properties will still be required to comply with the approved Landscape Design Guidelines and with City landscaping requirements.

iii. The project provides significant amounts of plant material sized in excess of the landscaping requirements of Sections 9-9-12, "Landscaping and Screening Standards," and 9-9-13, "Streetscape Design Standards," B.R.C. 1981; and

Not applicable, as the project as a whole (the Dakota Ridge North PUD) has already been fully completed, and the proposed Design Code amendment will not affect the approved landscaping or built environment other than to reduce the required setback for fences within the rear yard of properties abutting an alley. Individual properties will still be required to comply with the approved Landscape Design Guidelines and with City landscaping requirements.

iv. The setbacks, yards and useable open space along public rights of way are landscaped to provide attractive streetscapes, to enhance architectural features and to contribute to the development of an attractive site plan.

Standard met. The project as a whole (the Dakota Ridge North PUD) has already been fully completed, and the proposed Design Code amendment will not affect the approved landscaping or built environment other than to reduce the required setback for fences within the rear yard of properties abutting an alley. Individual properties will still be required to comply with the approved Landscape Design Guidelines and with City landscaping requirements.

(F) Building Design, Livability and Relationship to the Existing or Proposed Surrounding Area:

i. *The building height, mass, scale, orientation, architecture and configuration are compatible with the existing character of the area or the character established by adopted design guidelines or plans for the area;*

   Not applicable, as the project as a whole (the Dakota Ridge North PUD) has already been fully completed, and the proposed Design Code amendment will not affect the existing building height, mass, scale, orientation, architecture or configuration. The only outcome of the proposed amendment would be to reduce the required setback for fences within the rear yard of properties abutting an alley. Individual properties will still be required to comply with the approved Design Code standards pertaining to building design.

ii. *The height of buildings is in general proportion to the height of existing buildings and the proposed or projected heights of approved buildings or approved plans or design guidelines for the immediate area;*

   Not applicable. No changes to the existing building heights or to the standards pertaining thereto are proposed.

iii. *The orientation of buildings minimizes shadows on and blocking of views from adjacent properties;*

   The proposed amendment to the Design Code will increase the height of fences allowed to be set back 18 inches from an alley by 18 inches. The proposed height increase would be comprised of open lattice work, which would maintain a sense of openness and would not significantly increase the shadows caused by the rear yard fencing. In addition, the proposed amendment would still remain well under the by-right fence standards, which would otherwise allow for fences up to 7 feet in height to be at zero setback from a rear property line. Standard met.

iv. *If the character of the area is identifiable, the project is made compatible by the appropriate use of color, materials, landscaping, signs and lighting;*

   The proposed fence material palette would remain the same as is currently required by the Dakota Ridge North Design Code. Standard met.

v. *Projects are designed to a human scale and promote a safe and vibrant pedestrian experience through the location of building frontages along public streets, plazas, sidewalks and paths, and through the use of building elements, design details and landscape materials that include, without limitation, the location of entrances and windows, and the creation of transparency and activity at the pedestrian level;*

   The proposed amendment would not have any effect on the character of the building frontages, as it would only apply to fences located in the rear yard of properties abutting an alley. All of the existing design requirements contained in the Design Code pertaining to building frontages, public streets and sidewalks and the creation of transparency at the pedestrian level would remain unchanged. The

design detail requirements of the proposed amendment would also continue to create transparency and activity at the pedestrian level. Standard met.

vi. *To the extent practical, the project provides public amenities and planned public facilities;*

Not applicable. All public facilities required in the original approval have been constructed.

vii. *For residential projects, the project assists the community in producing a variety of housing types, such as multifamily, townhouses and detached single family units, as well as mixed lot sizes, number of bedrooms and sizes of units;*

Not applicable, as the project as a whole (the Dakota Ridge North PUD) has already been fully completed, and the proposed Design Code amendment will not affect the existing housing stock or built environment other than to reduce the required setback for fences within the rear yard of properties abutting an alley.

viii. *For residential projects, noise is minimized between units, between buildings and from either on-site or off-site external sources through spacing, landscaping and building materials;*

Not applicable, as the project as a whole (the Dakota Ridge North PUD) has already been fully completed, and the proposed Design Code amendment will not affect the existing built environment other than to reduce the required setback for fences within the rear yard of properties abutting an alley.

ix. *A lighting plan is provided which augments security, energy conservation, safety and aesthetics;*

Not applicable, as the project as a whole (the Dakota Ridge North PUD) has already been fully completed, and the proposed Design Code amendment will not affect the existing built environment other than to reduce the required setback for fences within the rear yard of properties abutting an alley.

x. *The project incorporates the natural environment into the design and avoids, minimizes or mitigates impacts to natural systems;*

Not applicable, as the project as a whole (the Dakota Ridge North PUD) has already been fully completed, and the proposed Design Code amendment will not affect the existing built environment other than to reduce the required setback for fences within the rear yard of properties abutting an alley.

xi. *Buildings minimize or mitigate energy use; support on-site renewable energy generation and/or energy management systems; construction wastes are minimized; the project mitigates urban heat island effects; and the project reasonably mitigates or minimizes water use and impacts on water quality;*

Not applicable, as the project as a whole (the Dakota Ridge North PUD) has already been fully completed, and the proposed Design Code amendment will not affect the existing built environment other than to reduce the required setback for fences within the rear yard of properties abutting an alley.

xii. *Exteriors of buildings present a sense of permanence through the use of authentic materials such as stone, brick, wood, metal or similar products and building material detailing;*

The proposed fence material palette would remain the same as is currently required by the Dakota Ridge North Design Code and limits fence materials to authentic materials including wood, masonry, and stone. Standard met.

xiii. *Cut and fill are minimized on the site, the design of buildings conforms to the natural contours of the land, and the site design minimizes erosion, slope instability, landslide, mudflow or subsidence, and minimizes the potential threat to property caused by geological hazards;*

Not applicable, as the project as a whole (the Dakota Ridge North PUD) has already been fully completed, and the proposed Design Code amendment will not affect the existing built environment other than to reduce the required setback for fences within the rear yard of properties abutting an alley.

xiv. *In the urbanizing areas along the Boulder Valley Comprehensive Plan boundaries between Area II and Area III, the building and site design provide for a well-defined urban edge; and*

Not applicable, as the project as a whole (the Dakota Ridge North PUD) has already been fully completed, and the proposed Design Code amendment will not affect the existing built environment other than to reduce the required setback for fences within the rear yard of properties abutting an alley.

xv. *In the urbanizing areas located on the major streets shown on the map in Appendix A to this title near the Boulder Valley Comprehensive Plan boundaries between Area II and Area III, the buildings and site design establish a sense of entry and arrival to the City by creating a defined urban edge and a transition between rural and urban areas.*

Not applicable, as the project as a whole (the Dakota Ridge North PUD) has already been fully completed, and the proposed Design Code amendment will not affect the existing built environment other than to reduce the required setback for fences within the rear yard of properties abutting an alley.

(D) The minor amendment is found to be substantially consistent with the intent of the original approval, including conditions of approval, the intended design character and site arrangement of the development, and specific limitations on additions or total size of the building which were required to keep the building in general proportion to others in the surrounding area or minimize visual impacts.

Per the introduction on Page 1 of the Dakota Ridge North Design Code,

"The primary intent of this design code is to create a community with characteristics similar to those of a traditional "town." Parks are a focus for public activity. Hopefully, this can be a place where its residents and visitors can rediscover the community of a small town. Dakota Ridge North consists of a variety of single-family homes, attached homes, and a small park. The configuration of these elements in Dakota Ridge North and the following code are meant to enhance the feeling of community, user convenience, and identity. The plan and the code also seek to create a pedestrian and bicycle-oriented community that provides for the realities of the automobile, but does not let it dominate the street or the neighborhood."

Additional key elements from the Design Code that support the stated intent of the PUD and Design Code are listed below:

"*How houses face public streets and open spaces is critical to the success of creating a*

pedestrian-oriented, town-like neighborhood. Primary ground floor entries must orient to streets, not the interior of blocks or sideyards. By placing garages in the rear of lots, entries and living space put "eyes on the street" and make the neighborhood safer and more active. With garage doors hidden from public view, front entries and porches gain greater visual emphasis, breaking the front façade into more human-scaled elements. By using alleys instead of front driveways, neighborhood streets can be more densely landscaped and using alleys instead of front driveways will make more on-street parking made available" (General Requirements, Pg. 3).

As indicated by the language above, the primary intent of the Dakota Ridge North development is to create a traditional, town-like setting where automobiles are de-emphasized through the placement of garages behind houses rather than in front, and where ground floor entries, front porches, landscaping and other design features are intended to create activity and interest at the pedestrian level. Many of these elements are considered to be representative of the "New Urbanist" movement as promoted by the non-profit urban planning group, the Congress for New Urbanism. The Dakota Ridge North Design Code includes guidelines and requirements for a variety of building and site elements, including, without limitation, setbacks and build-to lines, porches, façade articulation, roofs, materials, windows, fences and walls, garages, open space and landscaping.

Regarding fences, the Design Code designates two types of fences: 42" high "open" fences, which "*shall be primarily wood with the exception of corner posts and gate posts which may be masonry or stone,"* and "privacy" fences, which are allowed to be up to 5 feet in height and *"shall be built out of attractive, long-lasting materials such as: wood, masonry, or stone."*

Fences are subject to the following design restrictions: "*All posts must be masonry stone or wood. Rails must be wood. Permitted styles are: 1) post and rail; 2) wood frame with vinyl coated or painted metal fabric and 3) picket…Solid fences must be set back the same distance as their height south (likely intended to be "away") from any public walk."*

The code also allows planted hedges a maximum of 42" in height to be used in place of open fences. Regarding the placement of open fences on lots, the Design Code states: "*Fences or hedges can be located at the back of sidewalk along the front or exposed side of a lot. They may also be located along the right-of-way. Picket fences must be set back 18" from any public walk."* Regarding the placement of privacy fences on lots, the Design Code states: "*Privacy fences may be located along interior lot lines (and) must be set back a minimum of 30 feet from the front property line and a minimum of 15 feet from the rear property line when there is an alley."*

Overall, the fence standards found in the Design Code appear to be intended to maintain a sense of openness and to preclude a property owner from "walling off" their property by placing large, solid fences around the property line, in particular along street frontages. Given the emphasis on public sidewalks and front yard transparency, staff finds that the current request to allow for "partially open" 60 inch fences comprised of a maximum of 42 inches of solid wood and a minimum of 18 inches of open lattice work to be located 18 inches from an alley at the rear of a property rather than 15 feet from the alley at the rear of a property would not have any significant impact on "*how houses face public streets*" or the visual emphasis on entries and porches intended by the Design Code. The maximum and minimum dimensions for the solid fencing and lattice work would allow for some flexibility in terms of fence height and design while ensuring that any fence over 42 inches in height would be required to provide at least 18 inches of open lattice, thereby ensuring a high degree of transparency for fences from 42 inches up to 60 inches in height. The request is essentially maintaining a high degree of transparency over 42 inches while providing property owners with a more functional fence height in terms of privacy and safety.

(E) The city manager may amend, waive, or create a development agreement.

It has not been determined at this time whether a development agreement will be required.

Van Schaack, Chandler

From: Sharon Schilling [schillsa@msn.com]
Sent: Monday, November 16, 2015 10:24 PM
To: Van Schaack, Chandler
Subject: RE: Good Morning Chandler

Hi Chandler,

So that I am clear, you are saying I can't make a formal presentation now as will the applicant but can only speak as a member of
the public now in a limited capacity for just 3 minutes. Is that the procedure that only the applicant and staff presents and anyone else presenting
is not an option or had I said I will present, you would have scheduled me in? Did I misunderstand
your questions regarding scheduling and fail to make my intention to present clear?
If so, then the mistake is mine, but I'd still like to present if you could fit me into the schedule.

Thanks Chandler.

Sharon

From: VanSchaackC@bouldercolorado.gov
To: schillsa@msn.com
Subject: RE: Good Morning Chandler
Date: Mon, 16 Nov 2015 17:40:26 +0000

Hi Sharon,

As I mentioned in my previous email, the Planning Board secretary is the person you should contact in order to sign up to speak. There is a 3-minute time limit for members of the public to address the board unless you pool time with people in which case you can go up to 10 minutes I believe. Please contact Cindy Spence for details.

I will be sure to notify you of all matters pertaining to this application. If the application is approved by the Planning Board, there will be a 30-day period during which City Council may vote to call the item up - this requires a majority vote by council at a public hearing.

To visit the code section pertaining to the quasi-judicial hearing process, go to www.bouldercolorado.gov then click "A to Z" then click "B" then click "Boulder Revised Code" and go to that website, then click "Title 1" then click "Chapter 3."

Please let me know if you need anything else.

Best,

Chandler

From: Sharon Schilling [schillsa@msn.com]
Sent: Sunday, November 15, 2015 10:00 PM
To: Van Schaack, Chandler
Subject: RE: Good Morning Chandler

Hi Chandler,

I am surprise to hear you say that you didn't anticipate me presenting. I do intent to present Chandler. Would you make that change so that I can present, please.
I don't recall you asking, did I miss that?

How much time is allotted for a presenter? Shall I have an attorney to present for me?

So that future issues are not missed, would you see to it that my name is listed to receive notices of all public notices within my neighborhood. In other words, I have requested to be informed.

Should the amendment pass, what is the process for call up to city council?

Thanks for Cindy's email.

The link to the quasi-judicial hearing process did not open. Is there another link, please.

Thanks,

Sharon

From: VanSchaackC@bouldercolorado.gov
To: schillsa@msn.com
Subject: RE: Good Morning Chandler
Date: Fri, 13 Nov 2015 18:23:56 +0000

Hi Sharon,

I have sent you the PUD documents that are included within the scope of this review (the Design Code). Please explain what else you are looking for. The staff analysis I provided in the comments is still the only version available. The Site Review criteria referenced in staff's findings can be found at the link I provided earlier this morning. I will notify you once the staff memo is online, which will be at the end of next week. Public notice of the hearing will be provided via email to neighbors that have requested to remain informed (of which there were none other than you), will be posted in the newspaper no fewer than 10 days before the meeting, and will be posted on the Planning Board website.

Regarding the hearing, since you have not clearly stated your intent or position on this matter I had not anticipated that you would be presenting; however, as a member of the public you are allowed 3 minutes during the public hearing portion of the meeting unless you pool time with other neighbors in which case you can go up to 10 minutes I believe. Please contact the Planning Board secretary, Cindy Spence, at spencec@bouldercolorado.gov with any further questions on how to sign up to speak/ present. Staff will be giving a 10-minute presentation, followed typically by a presentation from the applicant. After the presentations, the public is allowed to address the board. Following public participation there is a board discussion on the application, at the end of which they typically make their final decision. There is no opportunity for "rebuttal" from any party. Additional information on the quasi-judicial hearing process can be found here.

Thanks,

== == == == == == ==

Chandler Van Schaack
Planner II • City of Boulder
Community Planning & Sustainability
office: 303.441.3137 • fax: 303.441.3241
vanschaackc@bouldercolorado.gov
www.bouldercolorado.gov

From: Sharon Schilling [mailto:schillsa@msn.com]
Sent: Sunday, November 08, 2015 10:26 PM
To: Van Schaack, Chandler
Subject: Good Morning Chandler

Hi Chandler,

I still need the PUD, or link please. Thank you for the preliminary consistency analysis. I'd like a copy of final comments to the analysis please as well as clarification of number 2C referring to Subparagraphs (h)(2)(A), (C) and (F) as they pertain to Open Space, Landscaping, Building Design, Livability and Relationship to the Existing Proposed Surrounding Area. I'd like to read what the staff felt was not relevant.

Regarding the hearing, do you have a firm date and how will homeowners be notified? Shall I expect staff to present, what is the time allotted for my presentation, discussion or rebuttal and will there be other parties as in public meeting, aside from our group presenting their issues for review that same night?

Thank you for your help, Chandler,

Sharon

Van Schaack, Chandler

From: Sharon Schilling [schillsa@msn.com]
Sent: Wednesday, November 04, 2015 9:17 PM
To: Van Schaack, Chandler
Subject: RE: Good Morning Chandler

Thank you, Chandler.

From: VanSchaackC@bouldercolorado.gov
To: schillsa@msn.com
Subject: RE: Good Morning Chandler
Date: Mon, 2 Nov 2015 16:36:14 +0000

Hi Sharon,

Staff's interpretation of the intent of the PUD as it pertains to this application request is described in the criteria analysis section at the end of the review comments I provided you earlier.

Following the planning board hearing there will be a 30-day city council call-up period. There is no formal process to request a city council call-up other than emailing council to ask them to call it up. A call-up requires a majority vote by council at a public meeting. The Planning Board webpage can be found here: https://bouldercolorado.gov/boards-commissions/planning-board. I do not believe there are any bios but you can double check.

Best,

== == == == == == ==
Chandler Van Schaack
Planner II • City of Boulder
Community Planning & Sustainability
office: 303.441.3137 • fax: 303.441.3241
vanschaackc@bouldercolorado.gov
www.bouldercolorado.gov

From: Sharon Schilling [mailto:schillsa@msn.com]
Sent: Friday, October 30, 2015 6:48 PM
To: Van Schaack, Chandler
Subject: RE: Good Morning Chandler

Thanks Chandler. I'll look it over.

Would you also send along the intent of the PUD as written in the PUD. You referred to that as something the staff
referenced in making their decision and I'd like to access the same information to follow along with them.

You mentioned the Planning Board will be responsible for making a final decision. What is the process to follow to
request the city council call up? May I also have a link for the planning board members and bios?

Thanks very much Chandler.

Best,
Sharon

From: VanSchaackC@bouldercolorado.gov
To: schillsa@msn.com
Subject: RE: Good Morning Chandler
Date: Wed, 28 Oct 2015 17:02:41 +0000

Hi Sharon,

Apologies for the delay – I ended up having to send the comments out slightly late. The staff review comments to the applicant, which include a preliminary consistency analysis of the applicable review criteria, are attached to this email for your reference. Staff has decided to refer the item to the planning board for their consideration. The public hearing is tentatively scheduled for Dec. 3, 2015. Staff will be making a recommendation of approval; however, the Planning Board will be responsible for making a final decision to approve or deny the application.

Please let me know if you have any other questions.

Best,

== == == == == == ==
Chandler Van Schaack
Planner II • City of Boulder
Community Planning & Sustainability
office: 303.441.3137 • fax: 303.441.3241
vanschaackc@bouldercolorado.gov
www.bouldercolorado.gov

From: Sharon Schilling [mailto:schillsa@msn.com]
Sent: Tuesday, October 27, 2015 9:54 PM
To: Van Schaack, Chandler
Subject: Good Morning Chandler

Is the initial consistency analysis prepared for the applicant and review comments available yet? Also, if the intent of the PUD is available I'd like to have that.

Do we have a decision?

Thank you,

Sharon Schilling

Van Schaack, Chandler

From: Sharon Schilling [schillsa@msn.com]
Sent: Friday, October 23, 2015 8:42 AM
To: Van Schaack, Chandler
Subject: RE: DRN - PUD minor amendment

Good Morning Chandler,

As always you are very thorough Chandler and I appreciate that in you very much. Thank you. Perhaps I misled you when I asked for a reading of the
intent of the PUD. I was looking for the actual wording from the document or the PUD itself, particularly where the intent of the design is described to
the stakeholders. In sum, what was the intent of the design and how the builder intended to achieve that affect not only the design but the intent of the design.

I'll look forward to the analysis.

I do appreciate your efforts with scheduling, but the matter is still under review.

Thank you,

Sharon

From: VanSchaackC@bouldercolorado.gov
To: schillsa@msn.com
Subject: RE: DRN - PUD minor amendment
Date: Thu, 22 Oct 2015 19:55:32 +0000

Hi Sharon,

Yes, the brief description of the subject of the amendment entitled SITE REVIEW on the notice represents the sum of the proposed amendment.

The Design Code does not include any specific language or guidelines pertaining to retaining walls that I am aware of. Section 9-9-15(c)(2) of the city land use code regulates fences on retaining walls as follows:

(2) Fences on Retaining Walls: A fence located on or within three feet of a retaining wall, where both the fence and retaining wall are on the same property, shall not exceed a combined height of seven feet (see Figure 9-11 of this section), except that:
(A) Fence and Retaining Wall on Property Line: The combined height of a retaining wall and fence or a fence, located on or within three feet of a property line, may exceed seven feet when the abutting property owners are in joint agreement. (See Figure 9-12 of this section.) The fence shall not exceed an individual height of seven feet when measured from the highest elevation of grade within three feet of either side of the property line. (See Figure 9-13 of this section.) In no event shall such a fence exceed twelve feet in height.
(B) A fence not exceeding forty-two inches in height may be placed on a retaining wall regardless of the combined fence and retaining wall height.

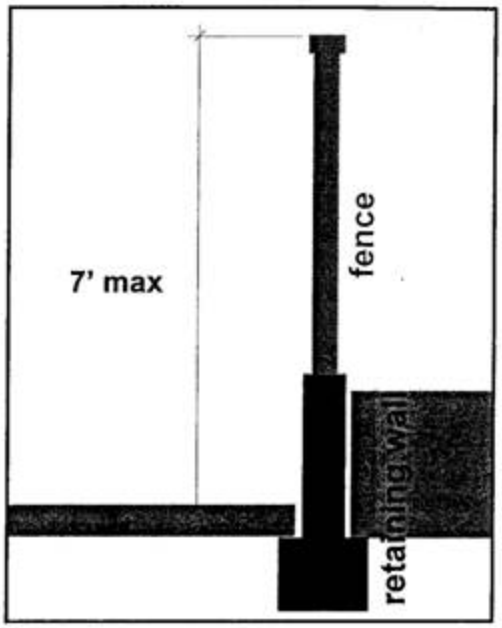

Figure 9-11: Fence on Retaining Wall

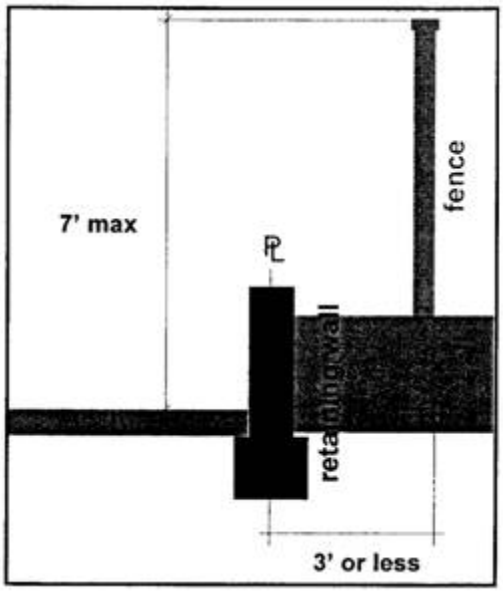

Figure 9-12: Fence on or Within Three Feet of Retaining Wall

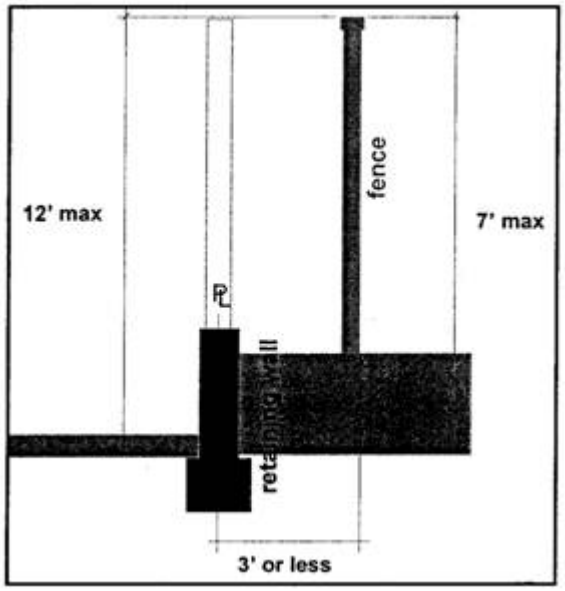

Figure 9-13: Fence Within Three Feet of Retaining Wall (Adjacent Owner Permission Required)

Given that there are no specific design guidelines pertaining to fences on retaining walls, the city standards would apply. This means that if the requested change were to be approved, someone could place a 5-foot fence, comprised of 3'6" of solid material and 18" of lattice, on top of or within 3 feet of a retaining wall as long as the retaining wall did not exceed 2 feet in height. If the retaining wall exceeded 2 feet in height, then the fence height would be restricted so that the obverall height of the fence and retaining wall as measured from adjacent grade.

Regarding your request for an inclusive reading of the PUD intent, I am planning to provide an initial consistency analysis to the applicant as part of the initial review comments, which are due out tomorrow, so I will forward you a copy of the comments and analysis when they are ready.

The reason I would like to know whether you plan on calling the item up or not before I make an initial decision is based primarily on process efficiency and scheduling concerns. Technically you do not have to decide whether or not you wish to call the item up until staff issues a decision, but if you wait until after I have made an initial decision to call it up then I will essentially have to duplicate a significant amount of work, as I will have prepared my initial memorandum and disposition, then will have to schedule a hearing and prepare a new memo and presentation for the hearing. While it may not seem significant, the above steps represent many hours of staff time.

There is also a matter of scheduling – with so many projects in right now, we are scheduling hearings several months in advance, so the difference between referring it to the board and scheduling a hearing now versus waiting for it to get called up several weeks from now could be the difference between scheduling a hearing in December versus January or February (as someone who attends a LOT of night meetings I try to consolidate projects as best I can to avoid having to attend multiple night meetings every month). These are some of the reasons why if we know that someone is intending to call an item up we usually just refer it directly to the board instead of going through all the work it takes to document staff's initial approval beforehand. I understand that none of this directly affects you, but there it is for your consideration.

Thanks,

== == == == == == ==
Chandler Van Schaack
Planner II • City of Boulder
Community Planning & Sustainability
office: 303.441.3137 • fax: 303.441.3241
vanschaackc@bouldercolorado.gov
www.bouldercolorado.gov

From: Sharon Schilling [mailto:schillsa@msn.com]
Sent: Wednesday, October 21, 2015 9:13 PM
To: Van Schaack, Chandler
Subject: RE: DRN - PUD minor amendment

Thank you Chandler.
I'll review the information and appreciate the attention you devoted to producing the information. Thank you.

Is the brief description of the subject of the amendment entitled SITE REVIEW on the notice, the sum of the amendment?

I did not notice any mention of retaining walls in the rear of the properties. How does the PUD and the city treat retaining walls to alley ways?

To follow the staff's rationale in support of the minor amendment as being substantially in line with the intent of the original PUD, I'll need an inclusive reading
of that PUD intent, please.

Chandler, I have not made a decision but thank you for your interest and suggestions.

As I understand the process and please correct me if I am wrong, I need do nothing now, nor give notice of any intent until the Planning Department renders a decision
as the staff's review is still in process, is that correct Chandler?

Thank you for your time.

Sharon

From: VanSchaackC@bouldercolorado.gov
To: schillsa@msn.com
Subject: RE: DRN - PUD minor amendment
Date: Wed, 21 Oct 2015 21:22:12 +0000

Hi Sharon,

Please see attached. I was paraphrasing in my email – the design code does not specifically say that fences up to 42" may be set back 18" from the alley. Instead, it states that privacy fences, or fences up to 5 feet in height, may be placed in the rear yard but must be setback 15 feet from the alley. It then goes on to state that all other fences may not exceed 42 inches, and that such fences may be located along the right-of-way (which includes alleys), but must be set back 18" from any adjacent public walk – the more conservative interpretation of this is that "public walk" was intended to mean public right-of-way, including alleys.

The rational for staff's support of the request is that the proposal has been found to meet the applicable review criteria for Minor Amendments to Approved Site Plans. The requested change is essentially a very minor change to the design code which has been found to be substantially consistent with the intent of the original PUD approval. Staff finds that allowing rear yard fence height to be increased by 18" of open lattice work is in keeping with the intended design character set by the design code while allowing for a more functional fence height in terms of privacy, safety, etc. Also,

because the requested change impacts only the rear yards of about half of the properties within the PUD, it will have no significant impact on the design character of the development as perceived from adjacent streets and sidewalks.

If I may ask, what is it about this request that you disagree with? You have made it clear that it is your intent to appeal staff's decision, yet you have not provided any indication as to what your motivations are for wanting to do so. I only ask to see if there may be a compromise possible or if the applicant may be able to amend their request to address your concerns. I do not mean to imply by my expressing support for the proposal in its current form that it is a "done deal" or that there is not room for compromise – only that the request in its current form has been found to be supportable by staff. If you have specific concerns or issues with the proposal in its current form, I would be happy to discuss these with you and to see if there is a way the application can be modified within reason to address your concerns.

Respectfully,

== == == == == == ==
Chandler Van Schaack
Planner II • City of Boulder
Community Planning & Sustainability
office: 303.441.3137 • fax: 303.441.3241
vanschaackc@bouldercolorado.gov
www.bouldercolorado.gov

From: Sharon Schilling [mailto:schillsa@msn.com]
Sent: Tuesday, October 20, 2015 10:29 PM
To: Van Schaack, Chandler
Subject: RE: DRN - PUD minor amendment

Thanks Chandler,

Would you provide the paragraph from the existing Design Code that I can reference that states: to allow fences in a back yard etc..... but allows fences that are 3'6" or less in height to be 18 inches from the alley, please.

I should like to know the rationale for the staff's decision to approve the application and to recommend that the board approve the amendment.

Other than the brief description noted on the public notice; SITE REVIEW MINOR AMENDMENT, is there any further explanation elsewhere?

Thank you,

Sharon Schilling

From: VanSchaackC@bouldercolorado.gov
To: schillsa@msn.com
Subject: RE: DRN - PUD minor amendment
Date: Tue, 20 Oct 2015 21:51:32 +0000
Hi Sharon,

Thanks for your emails. The PUD Minor Amendment application you are referring to (LUR2015-00092) was submitted by the President of the Dakota Ridge North HOA on behalf of the HOA Board of Directors. The Dakota Ridge North HOA

oversees management and maintenance of all commonly-owned areas within the PUD and implements the Design Code and other covenants and restrictions associated with the 65 residential properties contained within the PUD.

The intent of the Minor Amendment application is to amend the existing Design Code to allow for fences in a back yard to be up to 5 feet in height (consisting of 3'6" solid fence with the top 18" to be open lattice work) to be set back a minimum of 18 inches from the alley. The current Design Code requires that fences in a back yard over 3'6" in height must be set back 15 feet from the alley, but allows fences that are 3'6" or less in height to be 18 inches from the alley. The proposed amendment to the Design Code would only affect the 35 properties within Dakota Ridge North which back onto an alley.

The applicant has indicated that the application request is in response to property owners' desires to be able to enclose more of their back yards with slightly taller fences than are currently allowed, for both privacy and functionality. The proposed amendment would not affect either traffic flow or density, only the allowable height, design and setbacks for fences in back yards abutting an alley.

If, per your other email, you have already made up your mind to call up staff's decision on the application, then staff will just refer the application to the Planning Board for a public hearing. At this point, the public hearing wwould likely be scheduled for December 3, 2015, and staff will be making a recommendation of approval to the board. Staff has not received any other comments in opposition to the proposal, so you may wish to prepare a presentation for the board outlining the reasons you feel the application should be denied.

Thanks again for your emails and please do not hesitate to contact me with any additional questions or comments.

Respectfully,

== == == == == == ==
Chandler Van Schaack
Planner II • City of Boulder
Community Planning & Sustainability
office: 303.441.3137 • fax: 303.441.3241
vanschaackc@bouldercolorado.gov
www.bouldercolorado.gov

From: Sharon Schilling [mailto:schillsa@msn.com]
Sent: Monday, October 19, 2015 9:01 PM
To: Van Schaack, Chandler
Subject: DRN - PUD minor amendment

Good Morning, Chandler,

Ref the Dakota Ridge North minor amendment, what is the purpose, intent and motivation of the group and numbers of the group supporting and submitting the amendment, such as to increase traffic flow or decrease density?

Thank you,
Sharon Schilling

C I T Y O F B O U L D E R
PLANNING BOARD AGENDA ITEM
MEETING DATE: December 3, 2015

AGENDA TITLE: Public hearing and consideration of an Amendment to Approved Site Plans to amend the approved fencing standards for the TrailCrossing at Lee Hill residential development located at 820 Lee Hill Drive to allow privacy fences in specific areas. The project site is zoned Residential - Low 2 (RL-2). Case No. LUR2015-00094.

Applicant: SCOTT CHOMIAK ON BEHALF OF TRAIL CROSSING AT LEE HILL HOMEOWNER ASSOCIATION
Owner: KUH-LEE HILL, LLC (LOTS 17, 18, 24, 25 AND 31 AND OUTLOT A), JEREMY EPSTEIN AND SUSAN STRIFE (LOT 1)

REQUESTING DEPARTMENT:
Planning, Housing & Sustainability
David Driskell, Executive Director
Susan Richstone, Deputy Director
Charles Ferro, Development Review Manager
Sloane Walbert, Planner I

OBJECTIVE:
Define the steps for Planning Board consideration of this request:
1. Hear Applicant and Staff presentations
2. Hold Quasi-Judicial Public Hearing
3. Planning Board discussion
4. Planning Board action to approve, approve with conditions or deny

SUMMARY:

Proposal:	SITE REVIEW AMENDMENT to amend a previously approved Site Review application (#LUR2013-00033). Proposal to amend the approved fencing standards for the TrailCrossing at Lee Hill residential development to allow privacy fences in specific areas. The proposal would allow 6-foot cedar privacy fencing on Outlot A, 5-foot solid cedar fencing with 1 foot of latticework above (6 feet total) on Lots 1 and 17 and solid 3'-10" cedar fencing on Lots 18, 24, 25 and 31. Visually permeable 3'-10" high split rail fences would remain in all other locations.
Project Name:	820 LEE HILL DRIVE
Location:	TrailCrossing at Lee Hill Development
Zoning:	Residential - Low 2 (RL-2
Comprehensive Plan:	Low Density Residential

BACKGROUND:

Existing Site/Site Context

The project site is located between Lee Hill Drive and Yellow Pine Avenue, east of 8th Street (refer to **Figure 1**). The residential development was approved as a Site Review on October 24, 2013. The development includes 31 single-family homes with a mixture of attached and detached garages. As part of the development, Zamia Avenue was extended to the east and 10th Street was constructed as a connection from Yellow Pine Avenue to Lee Hill Drive. A few homes have been completed but the majority of the development is still under construction.

Figure 1: Vicinity Map

As shown in **Figure 2** on the following page, the development is located in a Residential - Low 2 (RL-2) zone district, which is described under section 9-5-2, B.R.C. 1981 as follows, *"medium density residential areas primarily used for small-lot residential development, including, without limitation, duplexes, triplexes or townhouses, where each unit generally has direct access at ground level."*

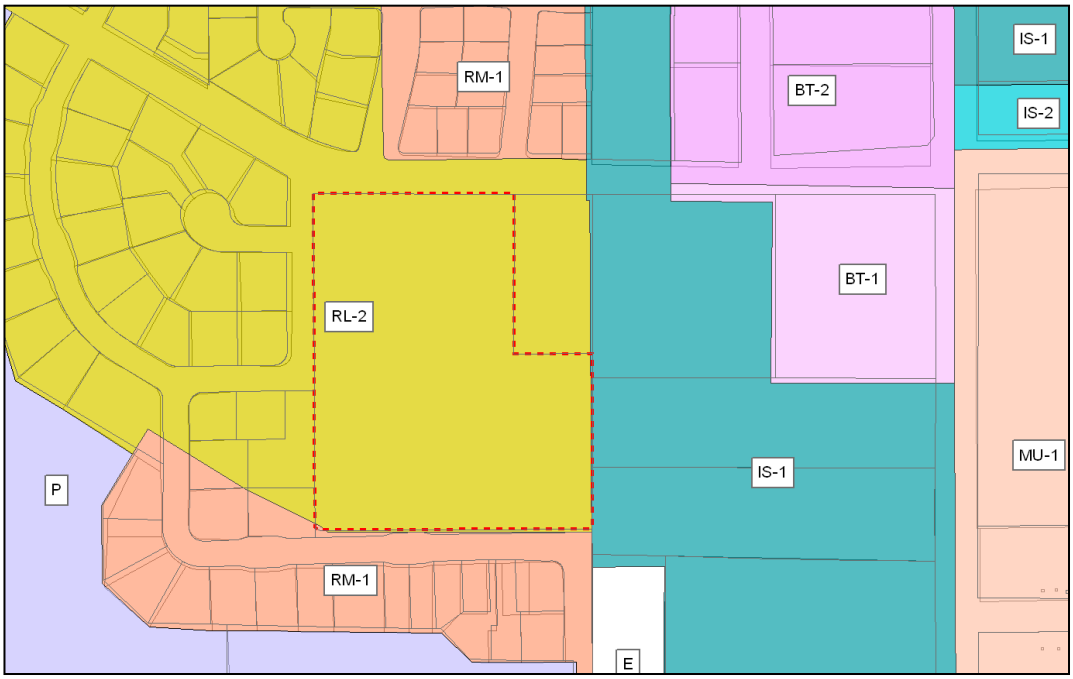

Figure 2: Zoning Map

Site Review Approval

In the initial submittal for a Site Review at the subject property, the applicant expressed their intent to develop a neo-traditional pedestrian-oriented neighborhood where houses and porches face the street (refer to **Figure 3)**. The concept also included the intent to extend the perception of green space thorough the use of low visually permeable fences. The submitted written statement asserts, "The yards that surround the park extend the green space and create a larger common green around the park, especially to the south. When combined with the generously spaced east-west path that meanders through this area, this provides a larger green buffer, extends the perception of open space, and joins the parks and the more informal open space to the east by utilizing an area that is less like a path and more like a community space."

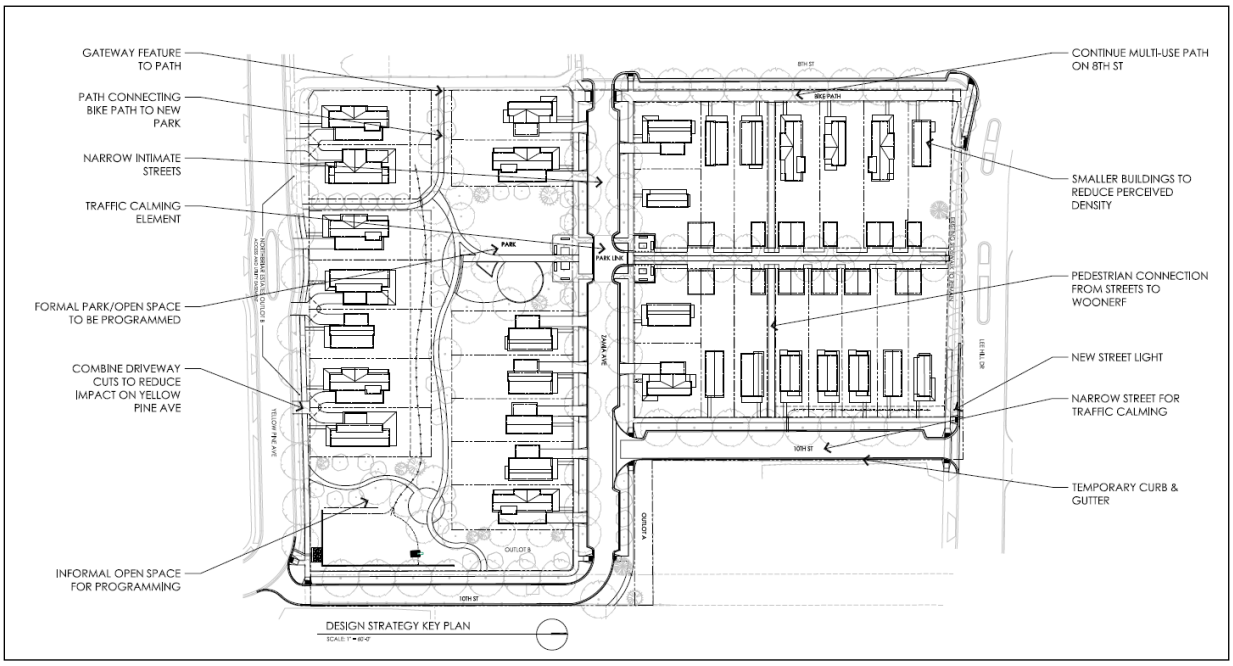

Figure 3: Approved Site Plan

In addition, at time of Site Review the proposal had to meet the design standards of the North Boulder Subcommunity Plan (NBSP). The development guidelines in the Plan for all neighborhoods states "leave front yards open wherever possible. When front yard fences are provided, they should be low and open." The NBSP also includes a street section for this portion of Lee Hill (below), which shows an open rail fence for side and back yards along Lee Hill Road.

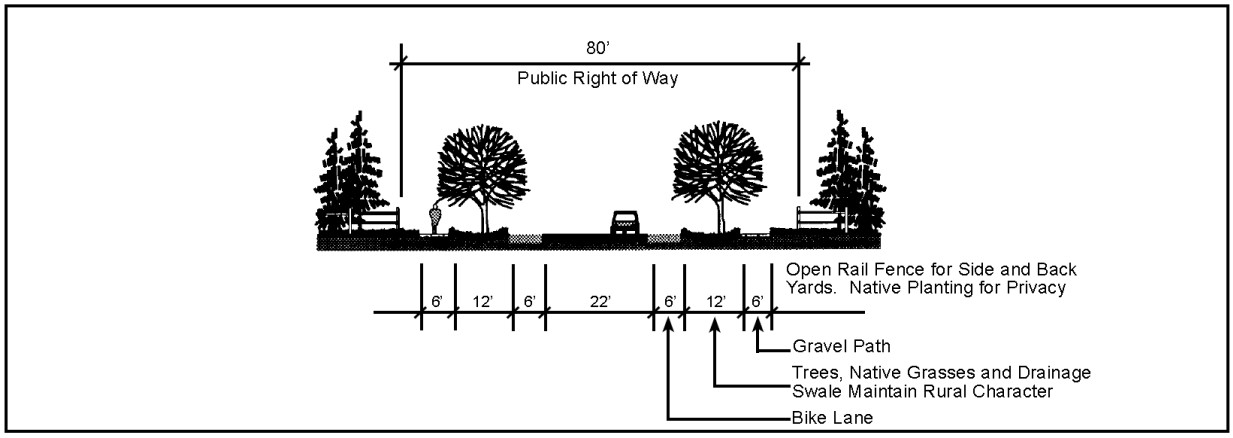

◆ **Lee Hill Road in the residential area: from 11th Street west to the city limits**

Figure 4: Lee Hill Street Section in NBSP

Approved Site and Architectural Plans

In response to the conditions of approval and Board discussion, the developer included a fence detail for a three-rail fence (see **Figure 5** below) and details regarding entry features with the final site and architectural technical documents. The intent of the fencing and entry features was to ensure that the proposed development would be integrated into the surrounding neighborhood and create a walkable and welcoming neighborhood.

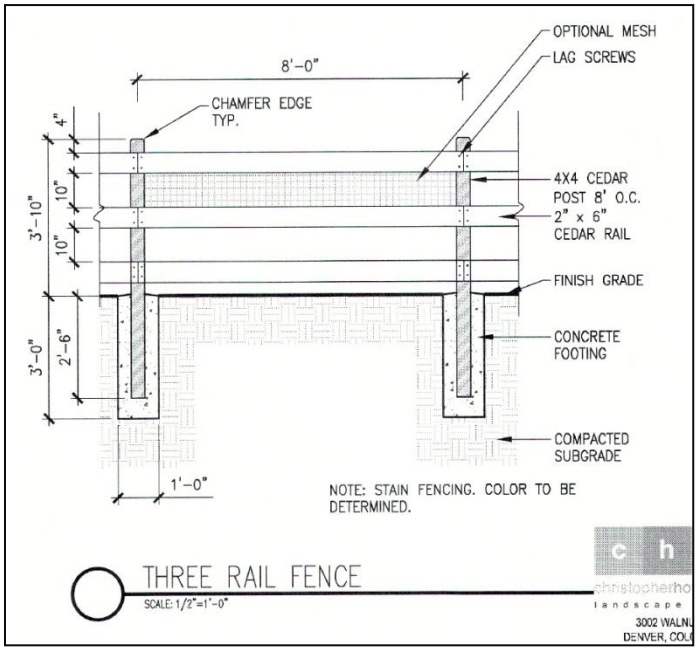

Figure 5: Approved Fencing Detail

The developer also submitted plans to demonstrate transparency and activity at the pedestrian level on the southeast corner of the site in order to promote safety (refer to **Figure 6** on the following page).

Figure 6: Building Facades Facing Informal Open Space

Project Description

The applicant is proposed a modification to the fencing plan for the development to allow for additional security and privacy within certain areas of the neighborhood. The proposed changes are as follows:

- 5 feet of solid cedar fencing with 1 foot of latticework (6 feet total) at the side and rear yards of Lots 1 and 17 adjacent to Lee Hill Drive;
- 6 foot cedar privacy fences along the north and east boundaries of Outlot A;
- Solid 3 feet-10 inch cedar fencing along a portion of the side yards of Lots 18 and 31 adjacent to the multi-use path, the side yard of Lot 25 and side and rear yard of Lot 24 adjacent to the informal open space;
- 3 feet-10 inch split rail fencing would remain in all other locations, including all front yards.

The intent of these changes is to address security and privacy concerns of current owners and anticipate future concerns. Refer to **Attachment D** for the proposed fencing plan with specific fencing locations and written statement.

REVIEW PROCESS:

The subject development was approved as a Site Review in 2013 (#LUR2013-00033). An Amendment to Approved Site Plans is required to modify the approval because the proposal will alter the basic intent of the site plan approval. The proposal may not be processed as a Minor Amendment because all approved dwelling units within the development phase have not been completed (section 9-2-14(l)(1)(A), B.R.C. 1981). On November 9, 2015, city staff approved the Amendment to Approved Site Plans to allow the proposed fencing plan modifications (refer to **Attachment A** for staff disposition). The Amendment is a staff-level decision subject to call-up by the Planning Board or by the public within 14 days of staff's decision. The application was called up for discussion by a member of the Planning Board on November 19, 2015.

KEY ISSUE:
Staff has identified the following key issue for the board's consideration:

Is the proposed Site Review Amendment consistent with the criteria for Minor Site Review Amendments to Approved Site Plans as set forth in section 9-2-14(m), B.R.C. 1981?

Staff finds that the proposal is consistent with the Site Review criteria set forth in section 9-2-14(h), "Site Review," B.R.C. 1981. Specifically, the proposed fencing will not detrimentally affect the neo-traditional design of the residential development. Staff finds that fencing to establish a level of boundary and privacy is appropriate in some locations of the development. Regarding fencing along Lee Hill, privacy fencing with latticework on the top serves to provide security and privacy but preserves a level of permeability. This design is also consistent with other fencing requirements in the North Boulder neighborhood. Regarding fencing along the multi-use path, solid 3'-10" cedar fencing serves as a boundary, not a barrier to the neighborhood. Similarly, solid 3'-10" cedar fencing is appropriate adjacent to the informal open space on the southeast corner of the site, considering that extensive landscaping is approved adjacent to the proposed fences and a solid fence would not affect the sight lines to this area. The fences would indicate that the back yards are private without creating an unwelcoming environment. Lastly, considering the commercial and industrial use of adjacent properties to the north and east, 6 foot privacy fencing is supportable on Outlot A. Refer to **Attachment C** for staff's complete analysis of the review criteria.

PUBLIC COMMENT:
Required public notice was provided in the form of written notifications of the application to property owners within 600 feet of the subject property. In addition, a public notice sign was posted on the property. All public notice requirements of section 9-4-3, "Public Notice Requirements," B.R.C. 1981 were met. In response to the public notice, a few emails were received from neighbors regarding the proposal (refer to **Attachment B** for public correspondence). One of the neighbors expressed that privacy fencing along Lee Hill or along the east border would be fine but anywhere else would segregate the development from its surrounding neighborhood. This is something that the neighborhood worked hard to discourage. Another neighbor commented that the request for privacy fences is an inevitable consequence of the setback variances that were approved in the original site review. Staff has also been in correspondence with the owners and residents of Lot 1 of the development. They are very concerned about the safety and security of their family since they are located on Lee Hill Drive. The homeowner of Lot 1 addressed the Planning Board at the meeting on November 19, 2015 and appealed to the Board to call-up the item to allow a 6-foot stockade fence on Lee Hill on his property.

STAFF FINDINGS AND RECOMMENDATION:
Per section 9-2-14(m), "Amendments to Approved Site Plans," B.R.C. 1981, no proposal to modify, structurally enlarge, or expand any approved site review, other than a minor modification or minor amendment, will be approved unless the site plan is amended and approved in accordance with the procedures prescribed for approval of a site review. Staff finds that the proposal is consistent with the Site Review criteria set forth in section 9-2-14(h), "Site Review," B.R.C. 1981. Therefore, staff recommends that Planning Board approve Land Use Review #LUR2015-00094, incorporating this staff memorandum and associated review criteria as findings of fact and subject to the recommended conditions of approval.

RECOMMENDED CONDITIONS OF APPROVAL:

1. The Applicant shall be responsible for **ensuring that the development shall be in compliance with all approved plans** prepared by the Applicant on November 5, 2015 and on file in the City of Boulder Planning Department, except to the extent that the development may be modified by the

conditions of approval.

2. The Applicant shall comply with all previous conditions contained in any previous approvals, except to the extent that any previous conditions may be modified by this approval, including, but not limited to, the following agreements recorded in the records of the Boulder County Clerk and Recorder:

    a. DEVELOPMENT AGREEMENT dated March 3, 2014 and recorded at Reception No. 03369182 on March 6, 2014.

    b. SUBDIVISION AGREEMENT recorded at Reception No. 03407519 on October 13, 2014.

Approved By:

David Driskell, Executive Director
Department of Community Planning and Sustainability

ATTACHMENTS:

A. Staff Disposition
B. Neighborhood Correspondence
C. Staff Analysis of Review Criteria
D. Proposed Plans

CITY OF BOULDER
Planning and Development Services

1739 Broadway, Third Floor • P.O. Box 791, Boulder, CO 80306-0791
phone 303-441-1880 • fax 303-441-3241 • email plandevelop@bouldercolorado.gov
www.boulderplandevelop.net

CITY OF BOULDER PLANNING DEPARTMENT
NOTICE OF DISPOSITION

You are hereby advised that the following action was taken by the Planning Department based on the standards and criteria of the Land Use Regulations as set forth in Chapter 9-2, B.R.C. 1981, as applied to the proposed development.

DECISION:	**Approved with conditions**
PROJECT NAME:	**820 LEE HILL DR**
DESCRIPTION:	**SITE REVIEW AMENDMENT to amend the approved fencing standards at the TrailCrossing at Lee Hill development to allow privacy fences in specific locations. This approval will allow 6-foot cedar privacy fencing on Outlot A, 5-foot solid cedar fencing with 1 foot of latticework above on Lots 1 and 17 and solid 3'-10" cedar fencing on Lots 18, 24, 25 and 31. Revised fencing shall only be installed in locations detailed on the approved plans. Visually permeable 3'-10" high split rail fences will remain in all other locations.**
LOCATION:	**820 LEE HILL DR**
COOR:	**N09W07**
LEGAL DESCRIPTION:	**Lots 1-31 and Outlots A-B, 820 Lee Hill Subdivision, County of Boulder, Colorado**
APPLICANT:	**SCOTT CHOMIAK, KOELBEL URBAN HOMES**
OWNER:	**KUH LEE HILL LLC**
APPLICATION:	**Site Review Amendment, LUR2015-00094**
ZONING:	**Residential - Low 2 (RL-2)**
CASE MANAGER:	**Sloane Walbert**
VESTED PROPERTY RIGHT:	**NO; the owner has waived the opportunity to create such right under Section 9-2-19, B.R.C. 1981.**

FOR CONDITIONS OF APPROVAL, SEE THE FOLLOWING PAGES OF THIS DISPOSITION.

Approved On: 11/16/15
Date

By: _____
David Driskell, Executive Director of Planning, Housing and Sustainability

This decision may be appealed to the Planning Board by filing an appeal letter with the Planning Department within two weeks of the decision date. If no such appeal is filed, the decision shall be deemed final fourteen days after the date above mentioned.

Appeal to Planning Board expires: 11/27/15

Final approval date: _____

Address: 820 LEE HILL DR

IN ORDER FOR A BUILDING PERMIT APPLICATION TO BE PROCESSED FOR THIS PROJECT, A SIGNED DEVELOPMENT AGREEMENT AND FINAL PLANS FOR CITY SIGNATURE MUST BE SUBMITTED TO THE PLANNING DEPARTMENT WITH DISPOSITION CONDITIONS AS APPROVED SHOWN ON THE FINAL PLANS. IF THE DEVELOPMENT AGREEMENT IS NOT SIGNED WITHIN NINETY (90) DAYS OF THE FINAL DECISION DATE, THE PLANNING DEPARTMENT APPROVAL AUTOMATICALLY EXPIRES.

Pursuant to Section 9-2-12 of the Land Use Regulations (Boulder Revised Code, 1981), the applicant must begin and substantially complete the approved development within three years from the date of final approval. Failure to "substantially complete" (as defined in Section 9-2-12) the development within three years shall cause this development approval to expire.

CONDITIONS OF APPROVAL

1. The Applicant shall be responsible for **ensuring that the development shall be in compliance with all approved plans** prepared by the Applicant on November 5, 2015 and on file in the City of Boulder Planning Department, except to the extent that the development may be modified by the conditions of approval.

2. The Applicant shall **comply with all previous conditions** contained in any previous approvals, except to the extent that any previous conditions may be modified by this approval, including, but not limited to, the following agreements recorded in the records of the Boulder County Clerk and Recorder:

   a. DEVELOPMENT AGREEMENT dated March 3, 2014 and recorded at Reception No. 03369182 on March 6, 2014.

   b. SUBDIVISION AGREEMENT recorded at Reception No. 03407519 on October 13, 2014.

Address: 820 LEE HILL DR

From: Gail Promboin and Bob Burnham [mailto:burnboin@msn.com]
Sent: Thursday, October 08, 2015 6:45 AM
To: Walbert, Sloane
Cc: Bruce Goldstein
Subject: 820 Lee Hill

Hi, Sloane:

I noticed this week a sign posted across 10th Street from the project (not even on the property, but where hardly anyone would see it) saying that there was a revision to the site plan under review. However, I can't find anything about it on the City web site. Can you please send me a link or a description of what is being changed? Aren't they required to notify adjacent property owners? We sure didn't receive anything.

Thanks,

Gail Promboin
944 Yellow Pine Ave., Boulder

From: Gail Promboin and Bob Burnham [mailto:burnboin@msn.com]
Sent: Wednesday, October 14, 2015 5:05 PM
To: Walbert, Sloane
Cc: Bruce Goldstein
Subject: Re: 820 Lee Hill Site Review Amendment

Thank you, Sloane. I need you to know that the link you sent did not lead to any info on this modification. It was easier to find things on the older website.

Just a comment: These requests for privacy fences are the inevitable consequence of the wholesale setback variances that were approved in the original site review. Guess that's just how the City gets played.

Gail

From: Karie Koplar [mailto:kkkoplar@hotmail.com]
Sent: Sunday, October 18, 2015 7:12 PM
To: Walbert, Sloane
Subject: REVIEW #: LUR2015-00094

Sloane:

Please advise as to where exactly the privacy fencing would be placed at this site. I was told by the sales agent that they were planning one along Lee Hill, which would be fine. Along the east border where there is commercial adjacent properties would be fine. Anywhere else would segregate this neighborhood from

its surrounding neighborhood, which is something that we worked hard to discourage. The lack of specificity in the Review Announcement leads me to believe that they are asking for an open option for placing this fencing. Please let me know if that is true or not.

This project is a huge improvement over what was located on this property previously, however, the fact that the city did not require that the developer bury the power lines adjacent to the property along Lee Hill is a huge oversight, if that. They removed the beautiful evergreens along the western border and allowed the power lines, which are atrocious, to remain. All other developments in the area have buried power lines. Inconsistency is not a sign of good planning. If you walk up Lee Hill from the RTD stop these power lines become quite an eyesore. I'm rather surprised that the developer did not choose to voluntarily bury these lines.....it's not too late.

You will also notice that a tree is planted immediately in front of a cross-walk sign. This is a very obscure cross-walk that is located at a center lane island on a curve. It is difficult enough to see the cross-walk, let alone having the sign obscured to on-coming traffic. Please have the developer amend this immediately before the poor tree takes root, ...or worse. Thank you.

I look forward to hearing from you in regards to my questions and concerns above.

Karie KP Koplar
4818 6th Street
Boulder, CO 80304

From: Strife, Susie [mailto:sstrife@bouldercounty.org]
Sent: Thursday, October 22, 2015 6:57 PM
To: Walbert, Sloane
Cc: Jeremy Epstein
Subject: Letter of Support

Dear Sloan,

Thanks for discussing our project with us. We greatly appreciate it and I am sorry to have missed the call.

Jeremy said you may need a letter of support, which is now attached.

Let us know if anything else would help.

Thank you kindly
Susie

Susie Strife
Sustainability Coordinator
Boulder County
303-441-4565

Sustainability Office

Street Address: 1325 Pearl Street 13th Boulder, Colorado 80302
PO Box 471, Boulder, CO 80306 • Tel: 303-441-4565

Susie Strife, PhD Environmental Studies
Sustainability Coordinator Boulder County Colorado
Boulder County Commissioners' Office
1325 Pearl Street, Boulder CO 80301 .
303-709-0293

9/30/2015

Dear City of Boulder,

When we first thought about purchasing our new house on 4790 8th Street, my partner Jeremy and I were ***very*** concerned about the proximity of Lee Hill and the proximity of the homeless shelter, as we have one young child and hoping for another soon. We expressed these concerns to multiple planners at the City of Boulder and we were beyond disappointed that the City was reluctant to approve a privacy fence.

On Saturday September 12th, we experienced one of the worst possible incidents involving our 4-year-old daughter, Riley. A strange (man) jumped over our small split rail fence and climbed into her little playhouse and asked her a lot of inappropriate questions. Riley came inside extremely upset and we have had a difficult time getting her to play in the yard given this person scared her very much. We called the police, and the police officer's first suggestion was to put up a privacy fence immediately especially now that the stranger knows Riley and where she plays, which may target her for future issues since there is no privacy in our yard. Over the last few weeks, Jeremy and I wondered why we purchased this home if the most precious thing in our lives (our daughter's safety) is compromised.

There are several reasons we are pleading with the City of Boulder to allow us a full privacy fence along where our property is proximate to Lee Hill. Firstly, we want our children and family to be safe and to ensure that Riley is protected from future potential perpetrators.

Secondly, in order for a young family to afford a home in Boulder, we have to pay another type of "price" which is being proximate to a fast, high-traffic road. Being adjacent to this road is the **only** reason we were able to afford this home, as the price was reduced because its proximity to Lee Hill. It is easy for our daughter to run right onto the street; given a split rail fence does nothing to keep her inside the property. It's unjust for us to be in a position of having to forgo safety just because we cannot afford a more private home.

After our major incident, we were glad to hear that the City discussed these issues with Koelbel, and now we are really hoping you approve the fence plans from Koelbel. We have reviewed the fence plans and we are very supportive of this design. We are hoping you could expedite the approval, as we feel unsafe in our backyard and really want to start enjoying our new home.

Thank you for helping us find a solution that achieves privacy and safety for our family.

Sincerely,

Susie Strife, PhD
Boulder County Sustainability Coordinator

.

Section 9-2-14(m) Amendments to Approved Site Plans:

(1) No proposal to modify, structurally enlarge, or expand any approved site review, other than a minor modification or minor amendment, will be approved unless the site plan is amended and approved in accordance with the procedures prescribed by this section for approval of a site review, except for the notice and consent provisions of this subsection.

(2) No proposal to modify, structurally enlarge, or expand that portion of a building over the permitted height will be approved unless the site plan is amended and approved in accordance with the procedures prescribed by this section for approval of a building above the permitted height.

(3) If an applicant requests approval of an amendment to an approved site plan, the city manager shall provide public notice pursuant to Section 9-4-3, "Public Notice Requirements," B.R.C. 1981.

(4) The owners of all property for which an amendment is requested shall sign the application.

Section 9-2-14(h), B.R.C. 1981, "Site Review"

No site review application shall be approved unless the approving agency finds that:

(1) Boulder Valley Comprehensive Plan:

✓ **(A)** The proposed site plan is consistent with the land use map and the service area map and, on balance, the policies of the Boulder Valley Comprehensive Plan.

The proposal is in consistent with the following policies of the BVCP:

- *2.09 Neighborhoods as Building Blocks: The city and county will foster the role of neighborhoods to establish community character, provide services needed on a day-to-day basis, foster community interaction, and plan for urban design and amenities. All neighborhoods, whether residential areas, business districts, or mixed land use areas, should offer unique physical elements of neighborhood character and identity, such as distinctive development patterns or architecture; historic or cultural resources; amenities such as views, open space, creeks, irrigation ditches, and varied topography; and distinctive community facilities and business areas.*
- *2.10 Preservation and Support for Residential Neighborhoods: The city will work with neighborhoods to protect and enhance neighborhood character and livability and preserve the relative affordability of existing housing stock. The city will seek appropriate building scale and compatible character in new development or redevelopment, appropriately sized and sensitively designed streets and desired public facilities and mixed commercial uses. The city will also encourage neighborhood schools and safe routes to school.*
- *2.30 Sensitive Infill and Redevelopment: With little vacant land remaining in the city, most new development will occur through redevelopment. The city will gear subcommunity and area planning and other efforts toward defining the acceptable amount of infill and redevelopment and standards and performance measures for design quality to avoid or adequately mitigate negative impacts and enhance the benefits of infill and redevelopment to the community and individual neighborhoods. The city will also develop tools, such as neighborhood design guidelines, to promote sensitive infill and redevelopment.*

- *<u>2.31 Design of Newly-Developing Areas:</u> The city will encourage a neighborhood concept for new development that includes a variety of residential densities, housing types, sizes and prices, opportunities for shopping, nearby support services and conveniently sited public facilities, including roads and pedestrian connections, parks, libraries and schools.*
- *<u>2.32 Physical Design for People</u> by designing in a manner that is sensitive to social, health and psychological needs, including accessibility to those with limited mobility; provision of coordinated facilities for pedestrians, bicyclists and bus-riders; provision of functional landscaping and open space; and the appropriate scale and massing of buildings related to neighborhood context.*
- *<u>2.37 Enhanced Design for Private Sector Projects:</u> Through its policies and programs, the city will encourage or require quality architecture and urban design in private sector development that encourages alternative modes of transportation, provides a livable environment and addresses the elements listed below.*

<u>N/A</u> (B) The proposed development shall not exceed the maximum density associated with the Boulder Valley Comprehensive Plan residential land use designation. Additionally, if the density of existing residential development within a three-hundred-foot area surrounding the site is at or exceeds the density permitted in the Boulder Valley Comprehensive Plan, then the maximum density permitted on the site shall not exceed the lesser of:

Not applicable; fencing does not impact density.

<u>N/A</u> (i) The density permitted in the Boulder Valley Comprehensive Plan, <u>or</u>,

<u>N/A</u> (ii) The maximum number of units that could be placed on the site without waiving or varying any of the requirements of Chapter 9-8, "Intensity Standards," B.R.C. 1981.

<u>✓</u> (C) The proposed development's success in meeting the broad range of BVCP policies considers the economic feasibility of implementation techniques require to meet other site review criteria.

The development would not be rendered infeasible in meeting the BVCP policies or the site review criteria based upon the requirements and recommendations made within these comments.

<u>(2) Site Design:</u> Projects should preserve and enhance the community's unique sense of place through creative design that respects historic character, relationship to the natural environment, multi-modal transportation connectivity and its physical setting. Projects should utilize site design techniques which are consistent with the purpose of site review in subsection (a) of this section and enhance the quality of the project. In determining whether this subsection is met, the approving agency will consider the following factors:

<u>✓</u> (A) Open Space: Open space, including, without limitation, parks, recreation areas, and playgrounds:

<u>✓</u> (i) Useable open space is arranged to be accessible and functional and incorporates quality landscaping, a mixture of sun and shade and places to gather;

The proposed fencing will not affect the accessibility or functionality of usable open space.

N/A **(ii)** Private open space is provided for each detached residential unit;

Not applicable; fencing will not affect private open space.

N/A **(iii)** The project provides for the preservation of or mitigation of adverse impacts to natural features, including, without limitation, healthy long-lived trees, significant plant communities, ground and surface water, wetlands, riparian areas, drainage areas and species on the federal Endangered Species List, "Species of Special Concern in Boulder County" designated by Boulder County, or prairie dogs (Cynomys ludiovicianus), which is a species of local concern, and their habitat;

Proposed fencing will affect natural features.

N/A **(iv)** The open space provides a relief to the density, both within the project and from surrounding development;

Not applicable; fencing will not affect open space that provided relief to the density.

N/A **(v)** Open space designed for active recreational purposes is of a size that it will be functionally useable and located in a safe and convenient proximity to the uses to which it is meant to serve;

N/A **(vi)** The open space provides a buffer to protect sensitive environmental features and natural areas; and

N/A **(vii)** If possible, open space is linked to an area- or city-wide system.

N/A **(B)** ***Open Space in Mixed Use Developments (Developments that contain a mix of residential and non-residential uses)***

N/A **(C)** ***Landscaping***

N/A **(i)** The project provides for aesthetic enhancement and a variety of plant and hard surface materials, and the selection of materials provides for a variety of colors and contrasts and the preservation or use of local native vegetation where appropriate;

N/A **(ii)** Landscape design attempts to avoid, minimize or mitigate impacts on and off site to important native species, healthy, long lived trees, plant communities of special concern, threatened and endangered species and habitat by integrating the existing natural environment into the project;

N/A **(iii)** The project provides significant amounts of plant material sized in excess of the landscaping requirements of Sections 9-9-12, "Landscaping and Screening Standards," and 9-9-13, "Streetscape Design Standards," B.R.C. 1981; and

N/A **(iv)** The setbacks, yards and useable open space along public rights of way are landscaped to provide attractive streetscapes, to enhance architectural features and to contribute to the development of an attractive site plan.

N/A (D) ***Circulation:*** Circulation, including, without limitation, the transportation system that serves the property, whether public or private and whether constructed by the developer or not:

N/A **(i)** High speeds are discouraged or a physical separation between streets and the project is provided;

N/A **(ii)** Potential conflicts with vehicles are minimized;

N/A **(iii)** Safe and convenient connections are provided that support multi-modal mobility through and between properties, accessible to the public within the project and between the project and the existing and proposed transportation systems, including, without limitation, streets, bikeways, pedestrianways and trails;

N/A **(iv)** Alternatives to the automobile are promoted by incorporating site design techniques, land use patterns, and supporting infrastructure that supports and encourages walking, biking, and other alternatives to the single-occupant vehicle;

N/A **(v)** Where practical and beneficial, a significant shift away from single-occupant vehicle use to alternate modes is promoted through the use of travel demand management techniques;

N/A **(vi)** On-site facilities for external linkage are provided with other modes of transportation, where applicable;

N/A **(vii)** The amount of land devoted to the street system is minimized; and

N/A **(viii)** The project is designed for the types of traffic expected, including, without limitation, automobiles, bicycles, and pedestrians, and provides safety, separation from living areas, and control of noise and exhaust.

N/A (E)***Parking***

N/A **(i)** The project incorporates into the design of parking areas measures to provide safety, convenience, and separation of pedestrian movements from vehicular movements;

N/A **(ii)** The design of parking areas makes efficient use of the land and uses the minimum amount of land necessary to meet the parking needs of the project;

N/A **(iii)** Parking areas and lighting are designed to reduce the visual impact on the project, adjacent properties, and adjacent streets; and

N/A **(iv)** Parking areas utilize landscaping materials to provide shade in excess of the requirements in Subsection 9-9-6(d), and Section 9-9-14, "Parking Lot Landscaping Standards," B.R.C. 1981.

✓ (F) ***Building Design, Livability, and Relationship to the Existing or Proposed Surrounding Area***

✓ **(i)** The building height, mass, scale, orientation, architecture and configuration are compatible with the existing character of the area or the character established by adopted design guidelines or plans for the area;

The proposed fencing changes are consistent with the character of the neighborhood and the North Boulder Subcommunity Plan. The proposed privacy fencing will not affect integration of the development to the surrounding neighborhoods.

N/A **(ii)** The height of buildings is in general proportion to the height of existing buildings and the proposed or projected heights of approved buildings or approved plans or design guidelines for the immediate area;

N/A **(iii)** The orientation of buildings minimizes shadows on and blocking of views from adjacent properties;

✓ **(iv)** If the character of the area is identifiable, the project is made compatible by the appropriate use of color, materials, landscaping, signs, and lighting;

Proposed cedar fencing is compatible with the character of the existing area.

✓ **(v)** Projects are designed to a human scale and promote a safe and vibrant pedestrian experience through the location of building frontages along public streets, plazas, sidewalks and paths, and through the use of building elements, design details and landscape materials that include, without limitation, the location of entrances and windows, and the creation of transparency and activity at the pedestrian level;

The proposed fencing will not detrimentally affect the pedestrian experience. Open fencing will remain in all front yards and along the streetscape.

N/A **(vi)** To the extent practical, the project provides public amenities and planned public facilities;

N/A **(vii)** For residential projects, the project assists the community in producing a variety of housing types, such as multifamily, townhouses and detached single family units, as well as mixed lot sizes, number of bedrooms and sizes of units;

N/A **(viii)** For residential projects, noise is minimized between units, between buildings, and from either on-site or off-site external sources through spacing, landscaping, and building materials;

N/A **(ix)** A lighting plan is provided which augments security, energy conservation, safety, and aesthetics;

N/A **(x)** The project incorporates the natural environment into the design and avoids, minimizes, or mitigates impacts to natural systems;

N/A **(xi)** Buildings minimize or mitigate energy use; support on-site renewable energy generation and/or energy management systems; construction wastes are minimized; the project mitigates urban heat island effects; and the project reasonably mitigates or minimizes water use and impacts on water quality.

N/A **(xii)** Exteriors or buildings present a sense of permanence through the use of authentic materials such as stone, brick, wood, metal or similar products and building material detailing;

N/A **(xiii)** Cut and fill are minimized on the site, the design of buildings conforms to the natural contours of the land, and the site design minimizes erosion, slope instability, landslide, mudflow or subsidence, and minimizes the potential threat to property caused by geological hazards;

N/A **(xiv)** In the urbanizing areas along the Boulder Valley Comprehensive Plan boundaries between Area II and Area III, the building and site design provide for a well-defined urban edge; and

N/A **(xv)** In the urbanizing areas located on the major streets shown on the map in Appendix A of this title near the Boulder Valley Comprehensive Plan boundaries between Area II and Area III, the buildings and site design establish a sense of entry and arrival to the City by creating a defined urban edge and a transition between rural and urban areas.

N/A **(G)** ***Solar Siting and Construction:*** For the purpose of ensuring the maximum potential for utilization of solar energy in the City, all applicants for residential site reviews shall place streets, lots, open spaces, and buildings so as to maximize the potential for the use of solar energy in accordance with the following solar siting criteria:

N/A **(i)** *Placement of Open Space and Streets:* Open space areas are located wherever practical to protect buildings from shading by other buildings within the development or from buildings on adjacent properties. Topography and other natural features and constraints may justify deviations from this criterion.

N/A **(ii)** *Layout and Building Siting:* Lots are oriented and buildings are sited in a way which maximizes the solar potential of each principal building. Lots are designed to facilitate siting a structure which is unshaded by other nearby structures. Wherever practical, buildings are sited close to the north lot line to increase yard space to the south for better owner control of shading.

N/A **(iii)** *Building Form:* The shapes of buildings are designed to maximize utilization of solar energy. Buildings shall meet the solar access protection and solar siting requirements of Section 9-9-17, "Solar Access," B.R.C. 1981.

N/A **(iv)** *Landscaping:* The shading effects of proposed landscaping on adjacent buildings are minimized.

N/A **(H)** ***Additional Criteria for Poles Above the Permitted Height:*** No site review application for a pole above the permitted height will be approved unless the approving agency finds all of the following:

N/A **(i)** The light pole is required for nighttime recreation activities, which are compatible with the surrounding neighborhood, or the light or traffic signal pole is required for safety, or the electrical utility pole is required to serve the needs of the city; and

N/A **(ii)** The pole is at the minimum height appropriate to accomplish the purposes for which the pole was erected and is designed and constructed so as to minimize light and electromagnetic pollution.

N/A **(I)** ***Land Use Intensity Modifications***

N/A **(i)** *Potential Land Use Intensity Modifications:*

(a) The density of a project may be increased in the BR-1 district through a reduction of the lot area requirement or in the Downtown (DT), BR-2, or MU-3 districts through a reduction in the open space requirements.

(b) The open space requirements in all Downtown (DT) districts may be reduced by up to one hundred percent.

(c) The open space per lot requirements for the total amount of open space required on the lot in the BR-2 district may be reduced by up to fifty percent.

(d) Land use intensity may be increased up to 25 percent in the BR-1 district through a reduction of the lot area requirement.

N/A **(ii)** *Additional Criteria for Land Use Intensity Modifications:* A land use intensity increase will be permitted up to the maximum amount set forth below if the approving agency finds that the criteria in paragraph (h)(1) through subparagraph (h)(2)(H) of this section and following criteria have been met:

N/A **(J)** ***Additional Criteria for Floor Area Ratio Increase for Buildings in the BR-1 District***

N/A **(K)** ***Additional Criteria for Parking Reductions:*** The off-street parking requirements of Section 9-7-1, “Schedule of Form and Bulk Standards,” B.R.C. 1981, may be modified as follows:

N/A **(L)** ***Additional Criteria for Off-Site Parking:*** The parking required under Section 9-9-6, "Parking Standards," B.R.C. 1981, may be located on a separate lot if the following conditions are met:

Key:

- 3'-10" Open Rail Fence as currently approved (per TEC 2014-00025, dated 8/5/14
- 6' Solid Cedar Fence
- 5' Solid Cedar Fencing with 1' Lattice detail
- Optional 3'-10" Solid Cedar Fence. Otherwise, 3'-10" Open Rail Fence.

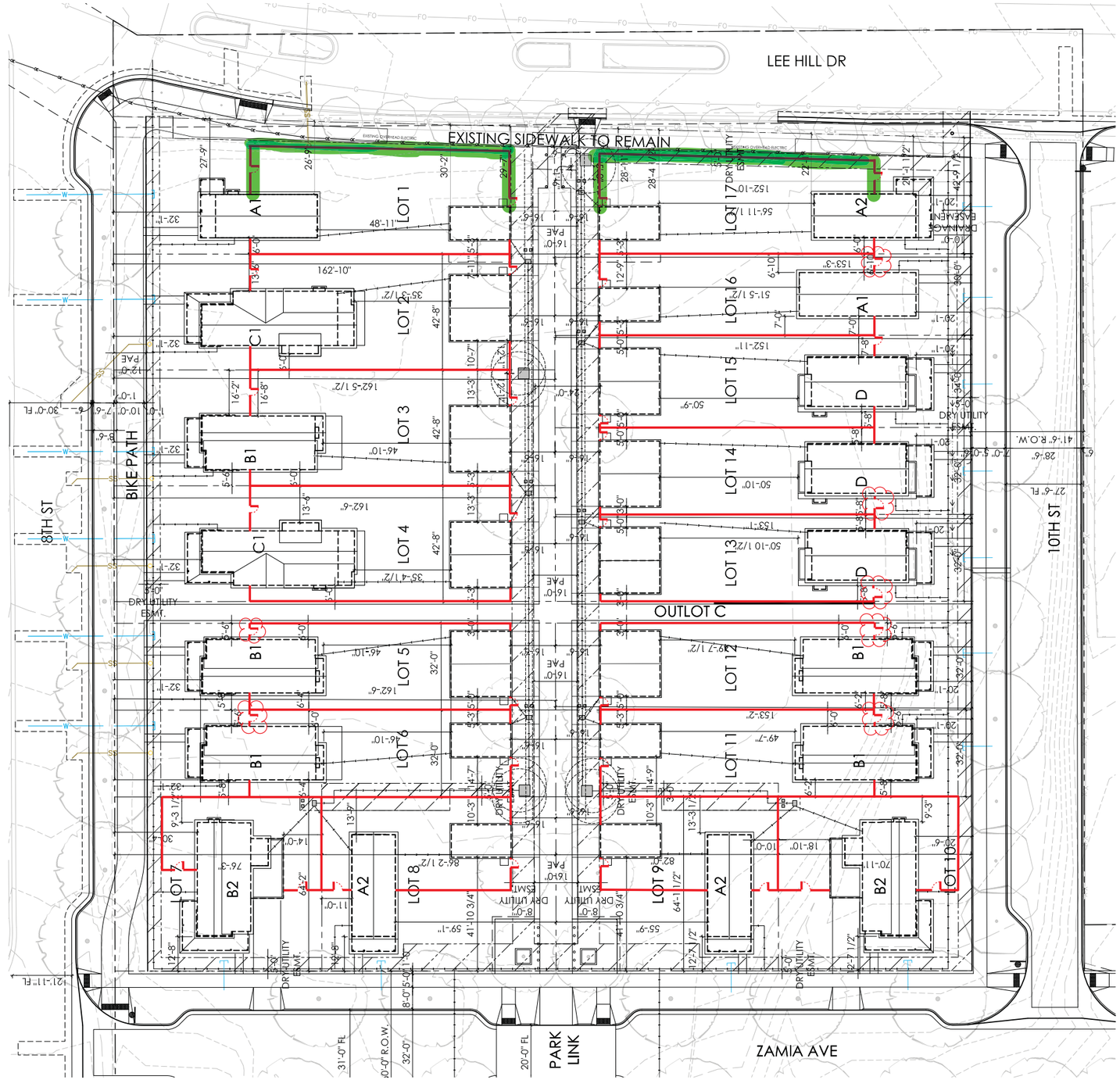

NORTH LOT UTILITY DETAIL
SCALE: 1" = 20'-0"

Fence and gate locations are subject to change. Coordinate fence and gate locations in the field to avoid conflicts with windows, window wells, gas meters, condensers, and landscape plan. All fencing must be a minimum of 18" from all sidewalks.

COBURN ARCHITECTURE
Creating Great Places
3020 CARBON PLACE #203
BOULDER CO 80301
T: 303 442 3351
F: 303 447 3933
www.coburndev.com
plan | design | build

820 LEE HILL DR.

BOULDER, CO

Disclaimer:
These documents are provided by Coburn Development Inc., for the design intent of this specific project and only this project. The contractor shall be responsible for all construction coordination, methods and materials required for the successful completion of the project. This includes but is not limited to the quality of workmanship and materials required for execution of these documents and work or materials supplied by any subcontractors. All work shall comply with governing codes and ordinances. The contractor shall review and understand all documents and shall notify the Architect immediately of any discrepancies in the drawings, field conditions or dimensions.

AUTHORSHIP

DRAWN BY	CHECKED	DATE
DL, TM	BH	03.17.14

REVISIONS

ISSUE	DATE
TEC DOC	03.17.14
RESUBMITTAL	05.19.14
RESUBMITTAL 2	06.16.14
MINOR MOD 2 REVISIONS	01.12.15
MINOR MOD 3 REVISIONS	03.16.15
MINOR MOD 4 REVISIONS	05.06.15

Minor Mod - Fence

EXHIBIT 1

11.05.15

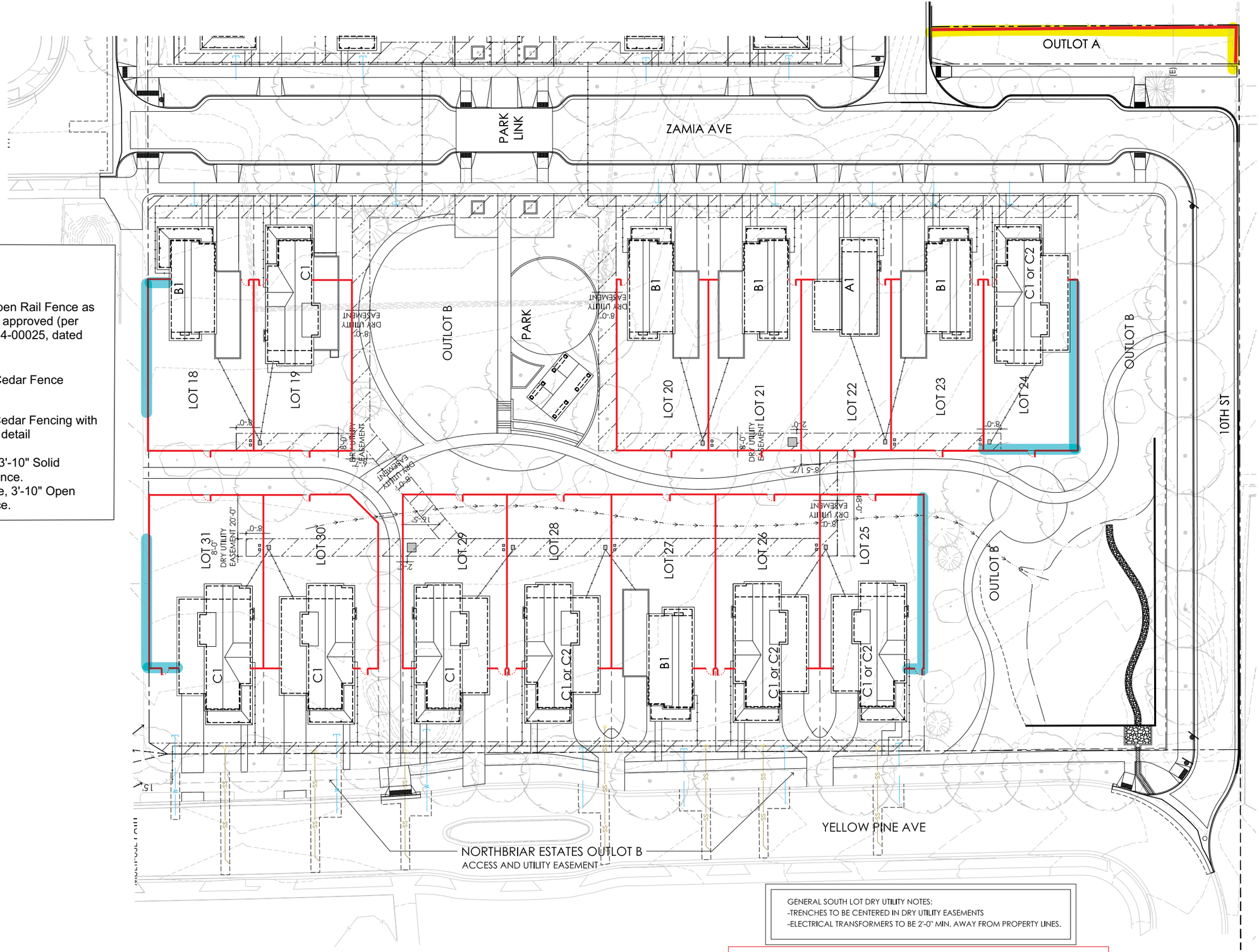

Key:

- 3'-10" Open Rail Fence as currently approved (per TEC 2014-00025, dated 8/5/14
- 6' Solid Cedar Fence
- 5' Solid Cedar Fencing with 1' Lattice detail
- Optional 3'-10" Solid Cedar Fence. Otherwise, 3'-10" Open Rail Fence.

SOUTH LOT UTILITY DIAGRAM

SCALE: 1" = 20'-0"

GENERAL SOUTH LOT DRY UTILITY NOTES:
-TRENCHES TO BE CENTERED IN DRY UTILITY EASEMENTS
-ELECTRICAL TRANSFORMERS TO BE 2'-0" MIN. AWAY FROM PROPERTY LINES.

Fence and gate locations are subject to change. Coordinate fence and gate locations in the field to avoid conflicts with windows, window wells, gas meters, condensers, and landscape plan. All fencing must be a minimum of 18" from all sidewalks.

COBURN ARCHITECTURE
Creating Great Places™
3020 CARBON PLACE #203
BOULDER CO 80301
T: 303 442 3351
F: 303 447 3933
www.coburndev.com
plan | design | build

820 LEE HILL DR.

BOULDER, CO

Disclaimer:
These documents are provided by Coburn Development Inc., for the design intent of this specific project and only this project. The contractor shall be responsible for all construction coordination, methods and materials required for the successful completion of the project. This includes but is not limited to the quality of workmanship and materials required for execution of these documents and work or materials supplied by any subcontractors. All work shall comply with governing codes and ordinances. The contractor shall review and understand all documents and shall notify the Architect immediately of any discrepancies in the drawings, field conditions or dimensions.

AUTHORSHIP

DRAWN BY	CHECKED	DATE
DL, TM	BH	03.17.14

REVISIONS

ISSUE	DATE
TEC DOC	03.17.14
RESUBMITTAL	05.19.14
RESUBMITTAL 2	06.16.14
MINOR MOD 2 REVISIONS	01.12.15
MINOR MOD 3 REVISIONS	03.16.15
MINOR MOD 4 REVISIONS	05.06.15

Minor Mod - Fence

EXHIBIT 2

11.05.15

PROPOSED 6' SOLID CEDAR FENCE DETAIL:

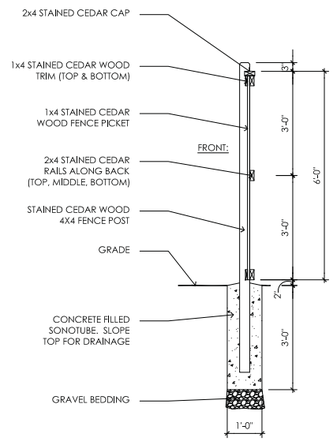

SECTION AT FENCE:

SCALE: 1/2" = 1'-0"

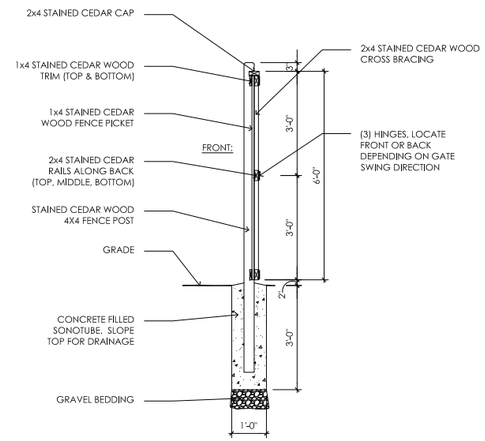

SECTION AT GATE:

SCALE: 1/2" = 1'-0"

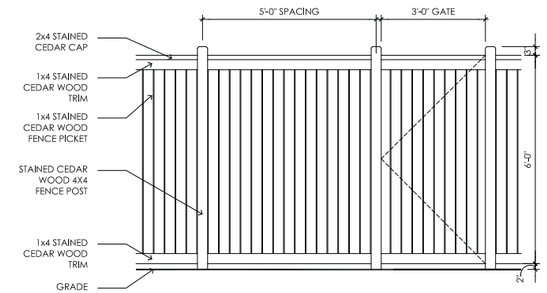

FRONT ELEVATION:

SCALE: 1/2" = 1'-0"

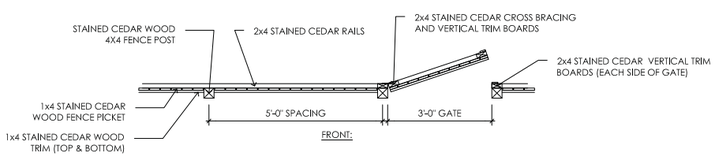

PLAN:

SCALE: 1/2" = 1'-0"

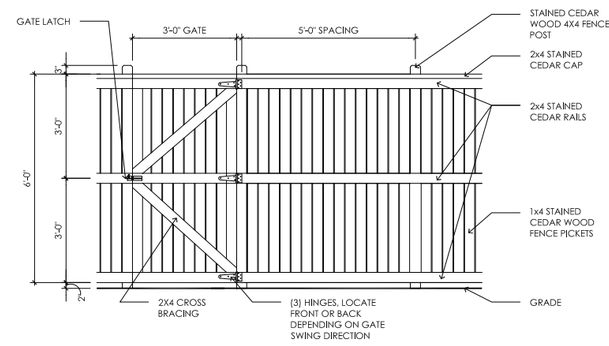

BACK ELEVATION:

SCALE: 1/2" = 1'-0"

EXISTING 3'-10" OPEN RAIL FRONT DETAIL PER TEC:

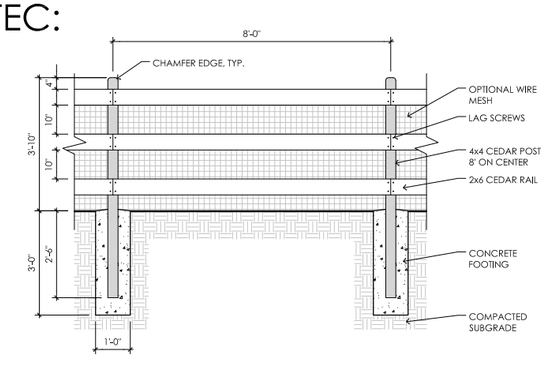

FENCE DETAIL

SCALE: 1/4" = 1'-0"

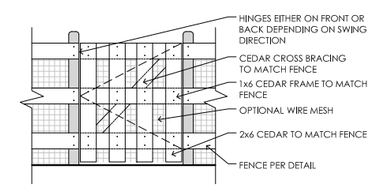

GATE DETAIL

SCALE: 1/4" = 1'-0"

COBURN ARCHITECTURE
Creating Great Places™
3020 CARBON PLACE #203
BOULDER CO 80301
T: 303 442 3351
F: 303 447 3933
www.coburndev.com
plan | design | build

820 LEE HILL DR.
BOULDER, CO

Disclaimer:
These documents are provided by Coburn Development Inc., for the design intent of this specific project and only this project. The contractor shall be responsible for all construction coordination, methods and materials required for the successful completion of the project. This includes but is not limited to the quality of workmanship and materials required for execution of these documents and work or materials supplied by any subcontractors. All work shall comply with governing codes and ordinances. The contractor shall review and understand all documents and shall notify the Architect immediately of any discrepancies in the drawings, field conditions or dimensions.

AUTHORSHIP

DRAWN BY	CHECKED	DATE
DL, TM, AM	BH	05.30.14

REVISIONS

ISSUE	DATE

MINOR MOD
FENCE

EXHIBIT 3

11.05.15

PROPOSED 6' SOLID CEDAR FENCE W/LATTICE DETAIL:

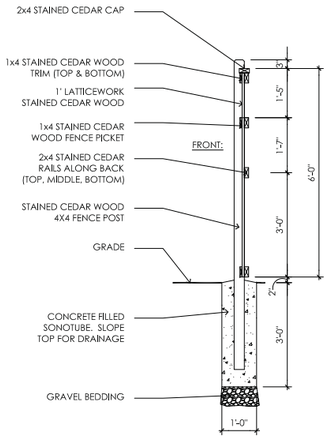

SECTION AT FENCE:

SCALE: 1/2" = 1'-0"

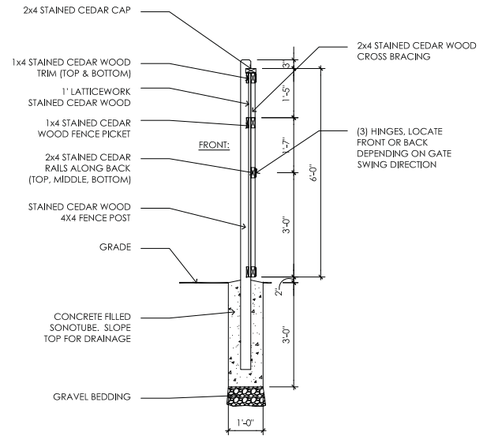

SECTION AT GATE:

SCALE: 1/2" = 1'-0"

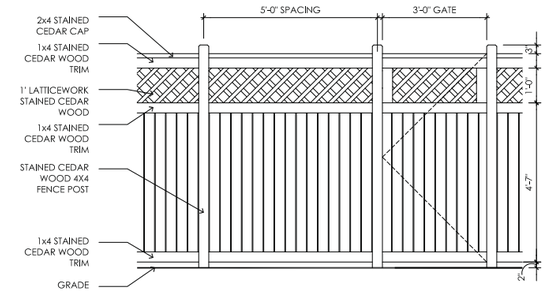

FRONT ELEVATION:

SCALE: 1/2" = 1'-0"

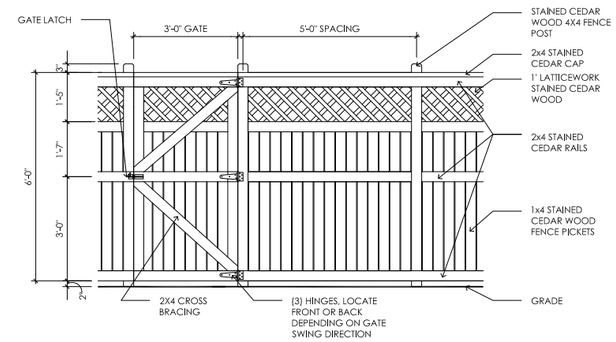

BACK ELEVATION:

SCALE: 1/2" = 1'-0"

PROPOSED 3' - 10"' SOLID CEDAR FENCE DETAIL:

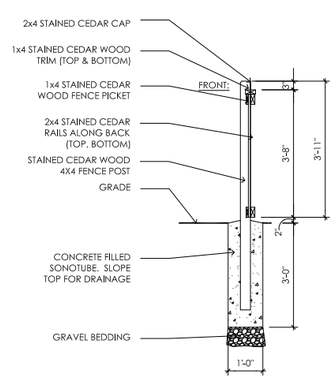

SECTION AT FENCE:

SCALE: 1/2" = 1'-0"

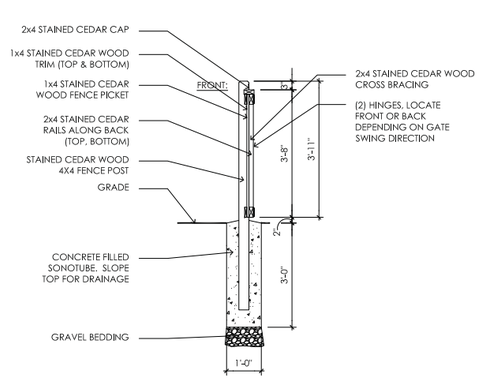

SECTION AT GATE:

SCALE: 1/2" = 1'-0"

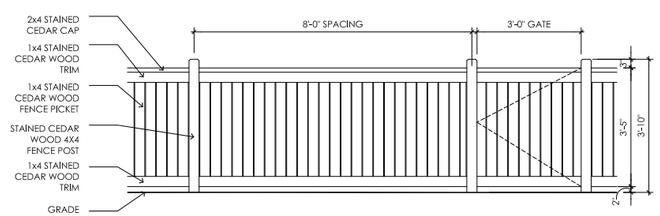

FRONT ELEVATION:

SCALE: 1/2" = 1'-0"

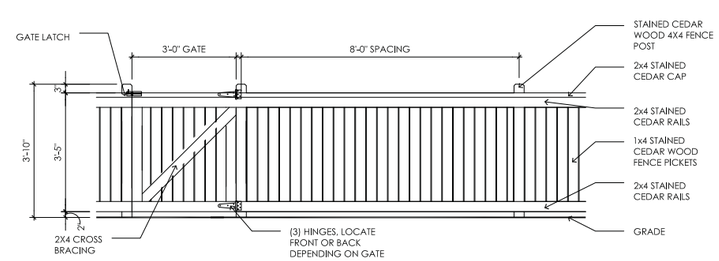

BACK ELEVATION:

SCALE: 1/2" = 1'-0"

COBURN ARCHITECTURE
Creating Great Places™
3020 CARBON PLACE #203
BOULDER CO 80301
T: 303 442 3351
F: 303 447 3933
www.coburndev.com

plan | design | build

820 LEE HILL DR.
BOULDER, CO

Disclaimer:
These documents are provided by Coburn Development Inc., for the design intent of this specific project and only this project. The contractor shall be responsible for all construction coordination, methods and materials required for the successful completion of the project. This includes but is not limited to the quality of workmanship and materials required for execution of these documents and work or materials supplied by any subcontractors. All work shall comply with governing codes and ordinances. The contractor shall review and understand all documents and shall notify the Architect immediately of any discrepancies in the drawings, field conditions or dimensions.

AUTHORSHIP

DRAWN BY	CHECKED	DATE
DL, TM, AM	BH	05.30.14

REVISIONS

ISSUE	DATE

MINOR MOD
FENCE

EXHIBIT 4

11.05.15

Koelbel
Urban Homes
Great Lines. Great Lifestyles.

October 5, 2015

Sloane Walbert
Planner 1
Department of Community Planning and Sustainability
City of Boulder
1739 Broadway, 3rd Floor
Boulder, Colorado 80306

RE: 820 Lee Hill Drive, Minor Amendment to an Approved Site Plan – Written Statement

Sloane-

Per the discussions that have occurred over the past two weeks, we are submitting an application for Minor Amendment to an Approved Site Plan. As, you are aware, a new existing homeowner which lives in the first house constructed in this neighborhood bordering Lee Hill Drive had an unfortunate experience of having a trespasser on their property. This led to discussions with the City regarding adding more secure fencing in areas that are adjacent to off-site public areas.

The proposal is very limited in scope and locates 6' cedar fences at the properties adjacent to Lee Hill road, in the Park Area and on section adjacent to an eastern neighboring property. The fence height and construction meets the City of Boulder Fencing Regulations and does not affect any criteria for approval from the Approved Tech Doc.

Thank you and please call me with any questions.

Sincerely

Scott Chomiak
KUH Lee Hill, LLC

5291 E. YALE AVENUE · DENVER, COLORADO · 80222 · (303) 758-3500
WWW.KOELBELCO.COM