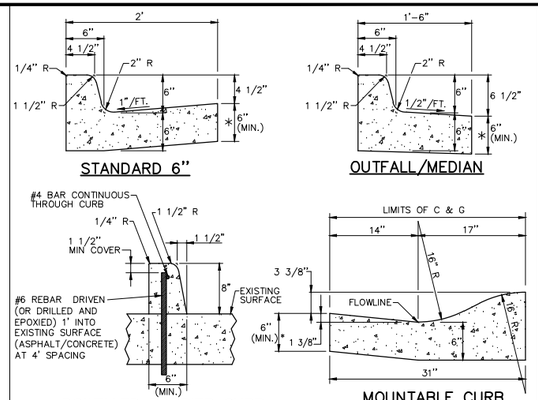

NOTES:

1. ALL EXPOSED CONCRETE SHALL HAVE A BROOM FINISH.
2. EXPANSION JOINTS SHALL BE INSTALLED AT 500 FOOT MAXIMUM INTERVALS SEE EXPANSION JOINT DETAIL.
3. CONTRACTION JOINTS SHALL BE INSTALLED AT END OF CURB RETURNS AND AT 10 FOOT MAXIMUM INTERVALS – SEE CURB CONTRACTION JOINT DETAIL.
4. WHEN JOINING EXISTING CURB, PROVIDE A MINIMUM OF THREE #4 x 18" DOWELS (9" EMBEDMENT) EVENLY SPACED.
5. * WHEN PLACING CURB ADJACENT TO CONCRETE PAVEMENT, THICKEN GUTTER TO MATCH PAVEMENT DEPTH.

DRAWN BY: JSH	CITY OF BOULDER, COLORADO	ISSUED: JULY 2, 1998
CHECKED BY: RJH	CURB AND GUTTER	REVISED: OCT 6, 2009
APPROVED BY: DIRECTOR OF PUBLIC WORKS		DRAWING NO. 2.01.A

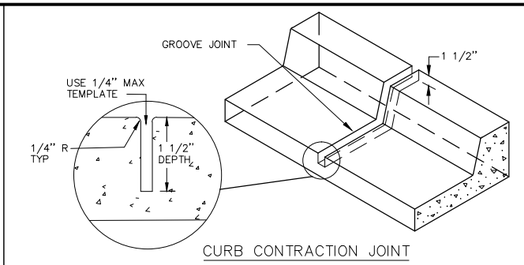

DRAWN BY: JSH	CITY OF BOULDER, COLORADO	ISSUED: JULY 2, 1998
CHECKED BY: WGH	CURB AND GUTTER JOINTS	REVISED: OCT 6, 2009
APPROVED BY: DIRECTOR OF PUBLIC WORKS		DRAWING NO. 2.01.B

NOTES:

1. ALL EXPOSED CONCRETE SHALL HAVE A BROOM FINISH.
2. EXPANSION JOINTS SHALL BE INSTALLED AT 500 FOOT MAXIMUM INTERVALS AND AT FIXED STRUCTURES (INLETS, BUILDINGS). SEE CONCRETE WALK AND MULTI-USE PATH JOINT DETAILS.
3. CONTRACTION JOINTS SHALL BE INSTALLED AT 5 FOOT INTERVALS OR INTERVALS EQUAL TO SIDEWALK WIDTH. SEE CONCRETE WALK AND MUILT-USE PATH JOINT DETAILS.
4. IF SIDEWALK IS PLACED ADJACENT TO CURB AND GUTTER, CONTRACTION JOINTS SHALL LINE UP WITH CURB AND GUTTER JOINTS.
5. LONGITUDINAL JOINTS ARE NOT ALLOWED IN CONCRETE WALK OR MULTI-USE PATH.

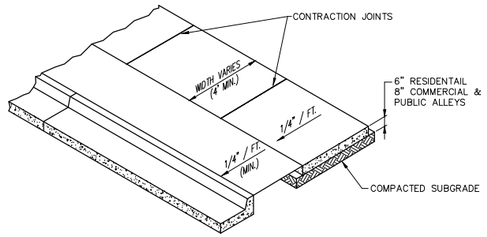

DRAWN BY: JSH	CITY OF BOULDER, COLORADO	ISSUED: JULY 2, 1998
CHECKED BY: WGH	CONCRETE WALK AND MULTI-USE PATHS	REVISED: OCT 6, 2009
APPROVED BY: DIRECTOR OF PUBLIC WORKS		DRAWING NO. 2.02.A

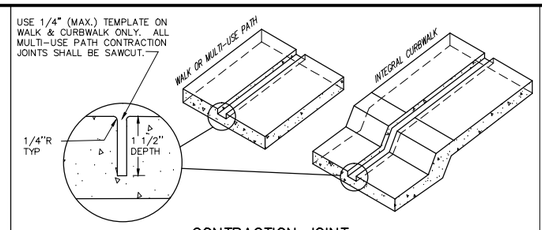

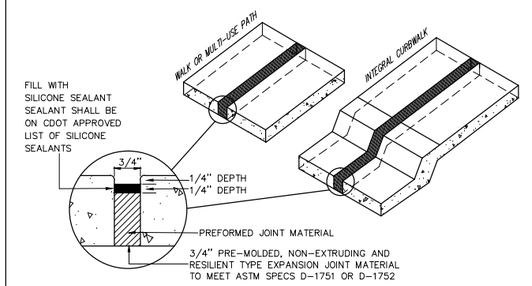

DRAWN BY: JSH	CITY OF BOULDER, COLORADO	ISSUED: JULY 2, 1998
CHECKED BY: WGH	CONCRETE WALK AND MULTI-USE PATH JOINTS	REVISED: OCT 6, 2009
APPROVED BY: DIRECTOR OF PUBLIC WORKS		DRAWING NO. 2.02.C

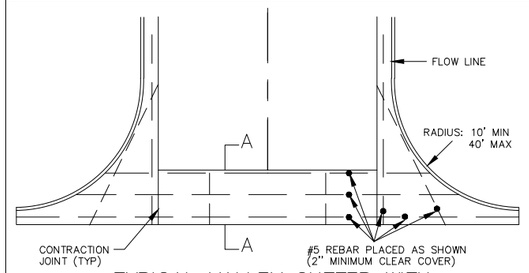

NOTES:

1. THE LONGITUDINAL GRADE ALONG THE FLOWLINE OF THE CURB RETURN SHALL BE 0.50% MINIMUM.
2. WHEN CONSTRUCTING DIFFERENT WIDTH STREETS, REINFORCING STEEL LENGTHS WILL CHANGE ACCORDINGLY BUT THE PATTERN WILL REMAIN THE SAME.

DRAWN BY: JSH	CITY OF BOULDER, COLORADO	ISSUED: JULY 2, 1998
CHECKED BY: RJH	CROSSPAN AND RADII CURB RETURN ACCESSES	REVISED: OCT. 17, 2000
APPROVED BY: DIRECTOR OF PUBLIC WORKS		DRAWING NO. 2.03

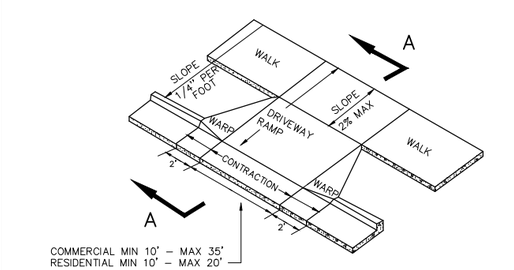

NOTE: CONTRACTION JOINTS ARE REQUIRED AT EACH SIDE OF WARPED SECTION AND EVERY 10 FEET (MAXIMUM) ALONG RAMP DRIVE.

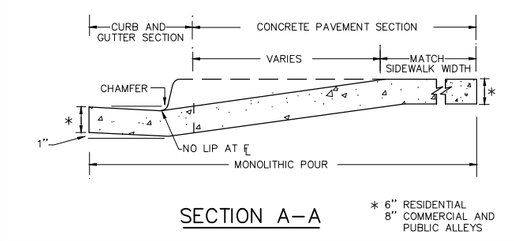

DRAWN BY: JSH	CITY OF BOULDER, COLORADO	ISSUED: JULY 2, 1998
CHECKED BY: WGH	DRIVEWAY RAMP DETACHED WALK	REVISED: OCT 6, 2009
APPROVED BY: DIRECTOR OF PUBLIC WORKS		DRAWING NO. 2.21

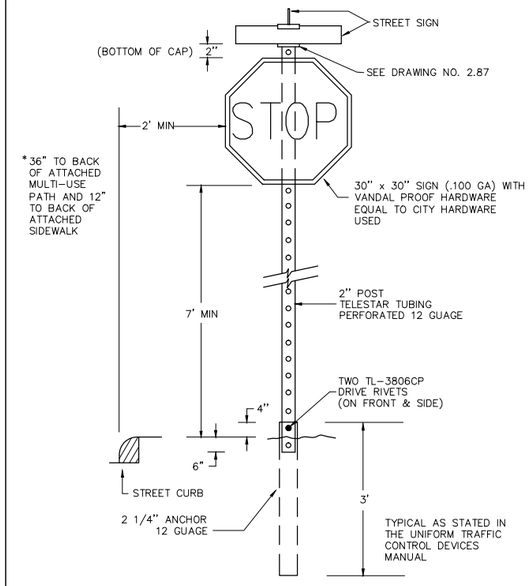

DRAWN BY: JSH	CITY OF BOULDER, COLORADO	ISSUED: JULY 2, 1998
CHECKED BY: MGS	SIGN INSTALLATION DETAILS	REVISED: OCT 6, 2009
APPROVED BY: DIRECTOR OF PUBLIC WORKS		DRAWING NO. 2.81

Computer File Information		
Creation Date: 02/13/14	Initials: JHK	
Last Modification Date: 06/18/15	Initials: JHK	
Full Path: P:\11-039.03\CAD		
Drawing File Name: 11-039.03_DETAIL BOULDER.dwg		
AutoCAD 2014	Scale: AS SHOWN	

MULLER ENGINEERING CO., INC.
CONSULTING ENGINEERS
777 S. WADSWORTH BLVD. 4-100
LAKEWOOD, COLORADO 80226
(303) 988-4939
MEC PROJECT NO. 11039.03

COLORADO REGISTERED 37254 CHRISTOPHER L. KRIEGER PROFESSIONAL ENGINEER 6/18/15

Sheet Revisions		
Date:	Comments	Init.

As Constructed	
No Revisions:	
Revised:	
Void:	

URBAN DRAINAGE AND FLOOD CONTROL DISTRICT
CDOT Region 4 RDM
CITY OF BOULDER

WONDERLAND CREEK - GREENWAYS IMPROVEMENT PROJECT
BOULDER STANDARD DETAILS

Designer: CLK	Structure Numbers	
Detailer: JHK		
Sheet Subset: BOULDER	Subset Sheets: B-1	

Project No./Code	
STM 110-081	
18405	
Sheet Number:	438

PLOTTED: 6/19/2015 12:24:15 PM
NAME: P:\11-039.03 WONDERLAND CREEK LOWER REACH-FINAL DESIGN\CAD\11-039.02_DETAIL BOULDER.DWG

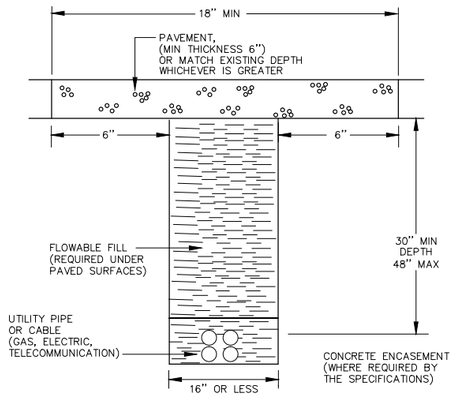

NOTE: IF TRENCH WIDTH IS WIDER THAN 16" USE UTILITY TRENCH DRAWING NO. 4.02

DRAWN BY: JSH	CITY OF BOULDER, COLORADO	ISSUED: JULY 2, 1998
CHECKED BY: RJH	UTILITY TRENCH 16" OR LESS	REVISED: OCT. 17, 2000
APPROVED BY: DIRECTOR OF PUBLIC WORKS		DRAWING NO. 4.01

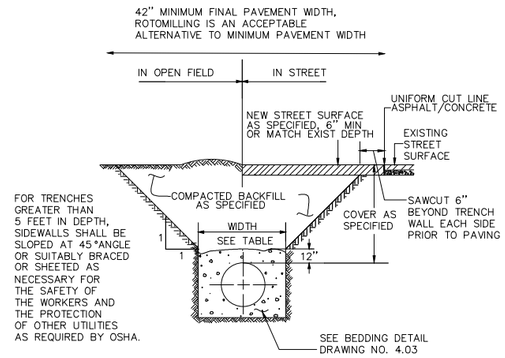

TYPICAL TRENCH SECTION

NOTES:

1. PAVING SHALL COMPLY WITH CITY OF BOULDER SPECIFICATIONS.
2. MINIMUM COVER TO BE BELOW OFFICIAL STREET GRADE.
3. MINIMUM DISTANCE BETWEEN EDGE OF TRENCH AND EDGE OF ASPHALT, OR LIP OF CURBLINE, SHALL BE 3 FEET.
4. REFER TO DRAWING NO. 4.04 FOR PAVEMENT RESTORATION FOR PAVEMENT LESS THAN 3 YEARS OLD.
5. ON STATE HIGHWAYS, REFER TO CDOT UTILITY REQUIREMENTS.

TRENCH WIDTH

PIPE DIAMETER	MINIMUM WIDTH	MAXIMUM WIDTH
6"	1'-6"	2'-6"
8"	1'-8"	2'-8"
12"	2'-0"	3'-0"
16"	2'-4"	3'-4"
20"	2'-8"	3'-8"
24"	3'-0"	4'-0"

DRAWN BY: JSH	CITY OF BOULDER, COLORADO	ISSUED: JULY 2, 1998
CHECKED BY: RJH	UTILITY TRENCH WIDER THAN 16"	REVISED: OCT. 17, 2000
APPROVED BY: DIRECTOR OF PUBLIC WORKS		DRAWING NO. 4.02

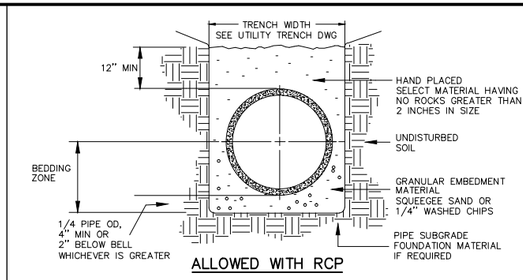

ALLOWED WITH RCP

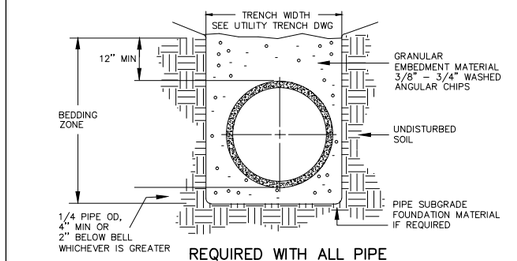

REQUIRED WITH ALL PIPE EXCEPT RCP

(MAY BE USED WITH RCP AT CONTRACTOR'S OPTION)

DRAWN BY: JSH	CITY OF BOULDER, COLORADO	ISSUED: JULY 2, 1998
CHECKED BY: RJH	PIPE BEDDING	REVISED: OCT. 17, 2000
APPROVED BY: DIRECTOR OF PUBLIC WORKS		DRAWING NO. 4.03

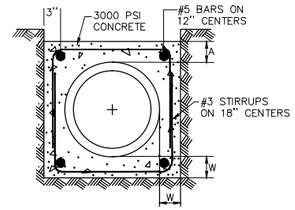

PIPE SIZE	W	A
6"	4"	4"
8"	4"	4"
10"	4"	4"
12"	4"	4"
15"	4"	4"
16"	4"	4"
18"	5"	5"
21"	5"	5"
24"	6"	6"

DRAWN BY: JSH	CITY OF BOULDER, COLORADO	ISSUED: JULY 2, 1998
CHECKED BY: RJH	CONCRETE ENCASEMENT	REVISED: OCT. 17, 2000
APPROVED BY: DIRECTOR OF PUBLIC WORKS		DRAWING NO. 4.06

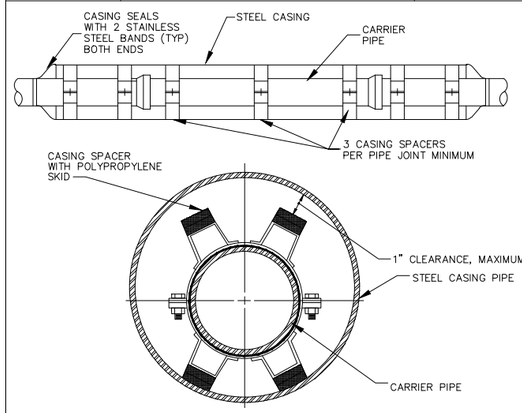

CARRIER PIPE NOMINAL DIA	CASING PIPE	
	MIN OD	MIN WALL THICK
6"	16"	0.250"
8"	18"	0.282"
12"	22"	0.344"
16"	28"	0.406"
20"	32"	0.469"

DRAWN BY: JSH	CITY OF BOULDER, COLORADO	ISSUED: JULY 2, 1998
CHECKED BY: RJH	PIPE CASING WITH CASING SPACERS	REVISED: OCT. 17, 2000
APPROVED BY: DIRECTOR OF PUBLIC WORKS		DRAWING NO. 4.09A

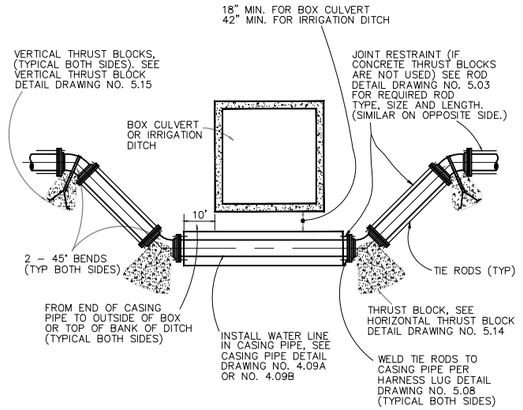

NOTE: PIPE RESTRAINT SHALL BE EITHER CONCRETE THRUST BLOCKS OR JOINT RESTRAINT AS SPECIFIED.

DRAWN BY: JSH	CITY OF BOULDER, COLORADO	ISSUED: JULY 2, 1998
CHECKED BY: RJH	WATER LINE LOWERING CULVERT CROSSING AND IRRIGATION DITCH CROSSING	REVISED: OCT. 17, 2000
APPROVED BY: DIRECTOR OF PUBLIC WORKS		DRAWING NO. 5.01B

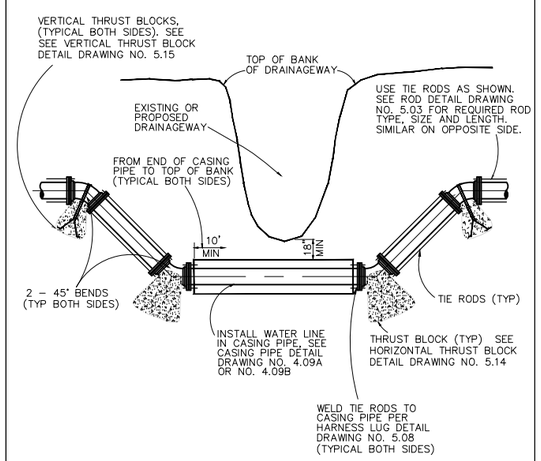

DRAWN BY: JSH	CITY OF BOULDER, COLORADO	ISSUED: JULY 2, 1998
CHECKED BY: RJH	WATER LINE LOWERING DRAINAGEWAY CROSSING ONLY	REVISED: OCT. 17, 2000
APPROVED BY: DIRECTOR OF PUBLIC WORKS		DRAWING NO. 5.01C

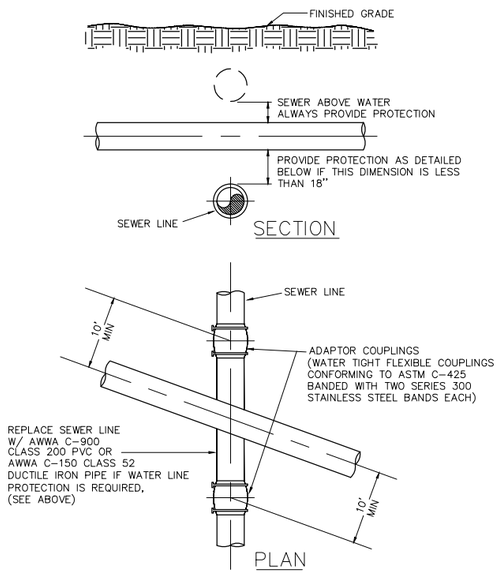

DRAWN BY: JSH	CITY OF BOULDER, COLORADO	ISSUED: JULY 2, 1998
CHECKED BY: RJH	SEWER CROSSING	REVISED: OCT. 17, 2000
APPROVED BY: DIRECTOR OF PUBLIC WORKS		DRAWING NO. 5.02

Computer File Information		
Creation Date: 02/13/14	Initials: JHK	
Last Modification Date: 06/18/15	Initials: JHK	
Full Path: P:\11-039.03\CAD		
Drawing File Name: 11-039.03_DETAIL BOULDER.dwg		
AutoCAD 2014	Scale: AS SHOWN	

MULLER ENGINEERING CO., INC.
CONSULTING ENGINEERS
777 S. WADSWORTH BLVD. 4-100
LAKEWOOD, COLORADO 80226
(303) 988-4939
MULLER
MEC PROJECT NO. 11039.03

COLORADO REGISTERED PROFESSIONAL ENGINEER
CHRISTOPHER L. KRAEGER
37254
6/18/15

Sheet Revisions		
Date:	Comments	Init.

As Constructed

No Revisions:

Revised:

Void:

Region 4 RDM

CITY OF BOULDER

WONDERLAND CREEK - GREENWAYS IMPROVEMENT PROJECT

BOULDER STANDARD DETAILS

Designer: CLK	Structure Numbers:	Project No./Code: STM 110-081
Detailer: JHK		18405
Sheet Subset: BOULDER	Subset Sheets: B-2	Sheet Number: 439

PLOTTED: 6/19/2015 12:24:18 PM
NAME: P:\11-039.03 WONDERLAND CREEK - LOWER REACH -FINAL DESIGN\CAD\11-039.03_DETAIL BOULDER.DWG

ROD NUMBER, DIAMETER AND LENGTH OF JOINT RESTRAINT

PIPE SIZE	4"			6"			8"			12"			16"			20"			24"		
FITTING	D	L	N	D	L	N	D	L	N	D	L	N	D	L	N	D	L	N	D	L	N
90° BEND TEE, PLUG OR VALVE	¾"	72'	2	¾"	102'	2	¾"	134'	2	¾"	190'	4	1"	245'	6	1¼"	298'	10	¾"	350'	12
45° BEND	¾"	14'	2	¾"	20'	2	¾"	27'	2	¾"	38'	4	1"	49'	6	¾"	60'	10	¾"	71'	12
22 1/2° BEND	¾"	4'	2	¾"	6'	2	¾"	8'	2	¾"	11'	4	¾"	14'	6	¾"	17'	10	¾"	21'	12
11 1/4° BEND	¾"	2'	2'	¾"	3'	2'	¾"	4'	2	¾"	5'	4	¾"	7'	6	¾"	9'	10	¾"	10'	12

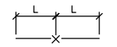

TEE OR VALVE

90°BEND

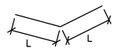

BENDS

NOTES:

1. LENGTH OF TIED PIPE MEASURED EACH WAY FROM VALVES AND BENDS.
2. D=DIAMETER, L=LENGTH, N=NUMBER.
3. MINIMUM 4'-6" GROUND COVER REQUIRED.
4. BASED ON 250 PSI INTERNAL PRESSURE FOR "L".
5. NUTS SHALL BE ASTM STANDARD DESIGNATION A-307 GRADE A OR B HEXAGON HEAVY SERIES.
6. CLAMP DETAILS DRAWING NO. 5.07.
7. ALL TIE RODS, WASHERS, NUTS, CLAMPS AND LUGS SHALL BE COATED WITH COAL-TAR ENAMEL.
8. ALL MATERIAL SHALL BE " COR-TEN" STEEL OR EQUAL.

DRAWN BY: JSH	CITY OF BOULDER, COLORADO	ISSUED: JULY 2, 1998
CHECKED BY: RJH	TIE ROD SPECIFICATIONS	REVISED: OCT. 17, 2000
APPROVED BY: DIRECTOR OF PUBLIC WORKS		DRAWING NO. 5.03

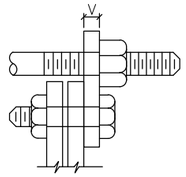

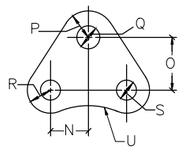

FLANGE LUG DETAIL

DIMENSIONS (IN INCHES)

PIPE DIA	N	O	HS ROD P	HS ROD Q	HS ROD ROD DIA	MS ROD P	MS ROD Q	MS ROD ROD DIA	R	S	U	V	PIPE DIA
4	1 7/16	2	1	7/8	3/4	1	7/8	3/4	7/8	3/4	2 7/8	3/4	4
6	1 13/16	2 1/4	1	7/8	3/4	1	7/8	3/4	7/8	7/8	3 3/4	3/4	6
8	2 1/4	2 3/4	1	7/8	3/4	1	7/8	3/4	1	7/8	4 7/8	3/4	8
12	2 3/16	2 3/4	1 1/8	7/8	3/4	1 1/4	1 1/8	1	1 1/8	1	7 1/4	7/8	12
16	2 1/16	2 3/4	1 1/8	1 1/8	1	1 1/2	1 3/8	1 1/4	1 1/4	1 1/8	9 3/8	1 1/8	16
20	1 31/32	2 3/4	1 1/4	1 3/8	1 1/4	–	–	–	1 7/16	1 1/4	11 1/16	1 1/4	20

NOTES:

1. MS MEANS MILD STEEL ROD ASTM STANDARD DESIGNATION A-36 (NUTS SHALL BE ASTM STANDARD DESIGNATION A-307 GRADE A OR B HEXAGON HEAVY SERIES).
2. HS MEANS HIGH STRENGTH STEEL ROD ASTM STANDARD DESIGNATION A-193 GRADE B7 (NUTS SHALL BE ASTM STANDARD DESIGNATION A-104 GRADE 2H).
3. FLANGE LUGS SHALL NOT BE USED ON VALVES.

DRAWN BY: JSH	CITY OF BOULDER, COLORADO	ISSUED: JULY 2,1998
CHECKED BY: RJH	FLANGE LUG DETAIL	REVISED: OCT. 17, 2000
APPROVED BY: DIRECTOR OF PUBLIC WORKS		DRAWING NO. 5.06

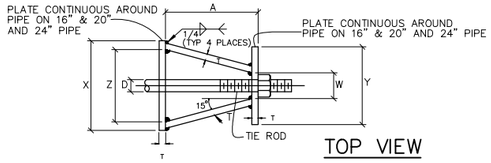

TOP VIEW

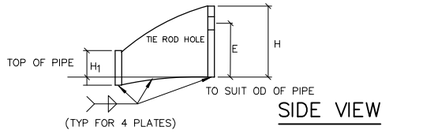

SIDE VIEW

	CARRIER PIPE NOMINAL DIA.	ROD DIA. D	A	W	Z	T	H	E	H_1	Y	X
W/O FLANGED LUGS	4" TO 12"	3/4"	5"	1 1/2"	3 3/4"	3/8"	4 1/8"	3 1/8"	2"	4 1/2"	5"
	16"	1"	5 3/4"	1 3/4"	4 7/16"	1/2"	4 1/2"	3 1/4"	2"	RING	RING
	20"	1 1/4"	7 1/2"	2"	5 1/2"	5/8"	5"	3 3/4"	2 1/2"	RING	RING
WITH FLANGED LUGS	4"	3/4"	5"	1 1/2"	3 3/4"	3/8"	4 1/8"	3 1/2"	2"	4 1/2"	5"
	6"	3/4"	5"	1 1/2"	3 3/4"	3/8"	4 1/8"	$3\frac{11}{16}$"	2"	4 1/2"	5"
	8"	3/4"	5"	1 1/2"	3 3/4"	3/8"	4 1/8"	4 5/16"	2"	4 1/2"	5"
	12"	3/4"	5"	1 1/2"	3 3/4"	1/2"	4 1/8"	4 7/8"	2"	4 1/2"	5"
	16"	1"	5 3/4"	1 3/4"	4 7/16"	1/2"	4 1/2"	5 3/8"	2"	RING	6"
	20"	1 1/4"	7 1/2"	2"	5 1/2"	5/8"	5"	5 1/4"	2 1/2"	RING	RING
	24"	1 1/4"	7 1/2"	2"	5 1/2"	5/8"	5"	5 1/4"	2 1/2"	RING	RING

NOTES:
1. N = PIPE WALL THICKNESS.
2. TIE ROD HOLE DIAMETER 1/8" LARGER THAN STUD DIAMETER.
3. BOTTOM EDGE OF ALL PLATES SHAPED TO FIT OUTSIDE DIAMETER OF PIPE.
4. FLANGED HARNESS LUGS SHALL BE COATED WITH COAL-TAR ENAMEL.

DRAWN BY: JSH	CITY OF BOULDER, COLORADO	ISSUED: JULY 2, 1998
CHECKED BY: RJH	COMBINATION FLANGED HARNESS LUG DETAILS FOR CASING PIPE	REVISED: OCT. 17, 2000
APPROVED BY: DIRECTOR OF PUBLIC WORKS		DRAWING NO. 5.08

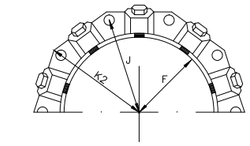

MECHANICAL JOINT RESTRAINT

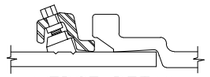
WEDGE DETAIL

BOLT HOLE DETAIL

DIMENSIONS

	NOMINAL PIPE SIZE	NO. OF BOLTS	NO. OF WEDGES	K2 INCHES	J INCHES	F INCHES	M INCHES	
D I	4"	4	2					D I
	6"	6	3	11.12	9.50	7.00	0.88	
	8"	6	4	13.37	11.75	9.15	1.00	
	10"	8	6	15.62	14.00	11.20	1.00	
	12"	8	8	17.88	16.25	13.30	1.25	

NOTE: REFER TO MS-28 OR SECTION 6.05 PARAGRAPH D. IN THE DENVER WATER DEPARTMENT SPECIFICATIONS.

DRAWN BY: JSH	CITY OF BOULDER, COLORADO	ISSUED: JULY 2, 1998
CHECKED BY: RJH	MECHANICAL JOINT RESTRAINT DETAILS	REVISED: OCT. 17, 2000
APPROVED BY: DIRECTOR OF PUBLIC WORKS		DRAWING NO. 5.09

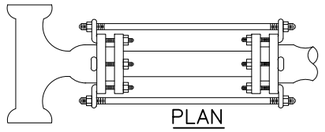
PLAN

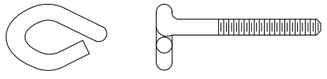
DETAIL

NOTES:
1. THE BOLT SHALL BE MANUFACTURED OF "COR-TEN" OR APPROVED EQUAL.
2. THE BOLT SHALL BE STAR PRODUCTS "SUPER STAR SYSTEM" OR EQUAL.
3. SEE DETAIL DRAWING NO. 5.03 FOR LENGTH OF TIED PIPE.

DIMENSIONS

ALLOWABLE PIPE DIAMETER INCHES	BOLT SIZE	NO. OF BOLTS REQUIRED
4	3/4"	2
6	3/4"	2
8	3/4"	2
10	3/4"	4
12	3/4"	4

DRAWN BY: JSH	CITY OF BOULDER, COLORADO	ISSUED: JULY 2, 1998
CHECKED BY: RJH	BURIED DUCTILE IRON PIPE JOINT RESTRAINT FOR 12" & SMALLER PIPE	REVISED: OCT. 17, 2000
APPROVED BY: DIRECTOR OF PUBLIC WORKS		DRAWING NO. 5.10

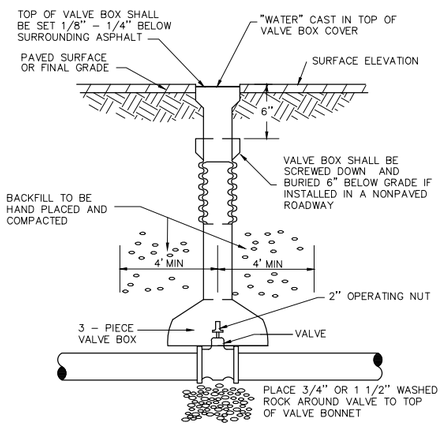

NOTES:
1. OPERATING NUT SHALL BE EXTENDED WITHIN 4 FEET OF SURFACE.
2. EXTENSION STEMS REQUIRED WHERE VALVE IS AT DEPTH GREATER THAN 5 FEET.

DRAWN BY: JSH	CITY OF BOULDER, COLORADO	ISSUED: JULY 2, 1998
CHECKED BY: RJH	VALVE BOX	REVISED: OCT. 17, 2000
APPROVED BY: DIRECTOR OF PUBLIC WORKS		DRAWING NO. 5.11

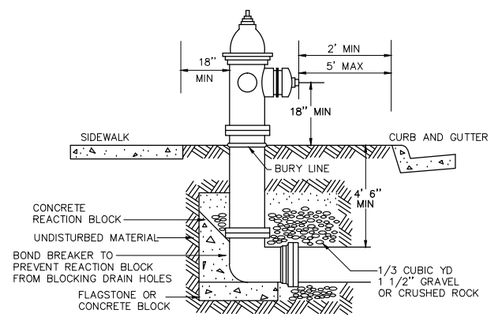

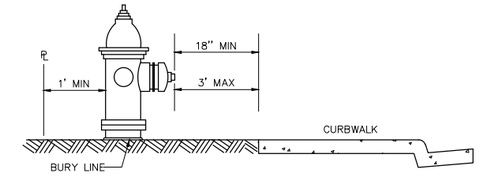

NOTE: FOR FIRE HYDRANT INSTALLATION, SEE DETAIL DRAWING NO. 5.13.

DRAWN BY: JSH	CITY OF BOULDER, COLORADO	ISSUED: JULY 2, 1998
CHECKED BY: RJH	FIRE HYDRANT PLACEMENT	REVISED: OCT. 17, 2000
APPROVED BY: DIRECTOR OF PUBLIC WORKS		DRAWING NO. 5.12

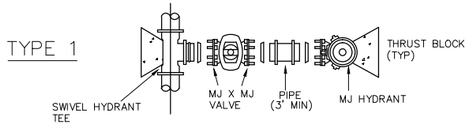

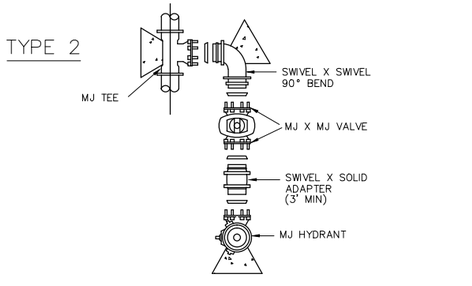

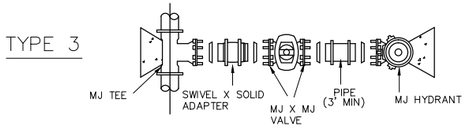

DRAWN BY: JSH	CITY OF BOULDER, COLORADO	ISSUED: JULY 2, 1998
CHECKED BY: RJH	FIRE HYDRANT INSTALLATION TYPES 1, 2 AND 3	REVISED: OCT. 17, 2000
APPROVED BY: DIRECTOR OF PUBLIC WORKS		DRAWING NO. 5.13

Computer File Information		
Creation Date: 02/13/14	Initials: JHK	
Last Modification Date: 06/18/15	Initials: JHK	
Full Path: P:\11-039.03\CAD		
Drawing File Name: 11-039.03_DETAIL BOULDER.dwg		
AutoCAD 2014	Scale: AS SHOWN	

MULLER ENGINEERING CO., INC.
CONSULTING ENGINEERS
777 S. WADSWORTH BLVD. 4-100
LAKEWOOD, COLORADO 80226
(303) 988-4939
MEC PROJECT NO. 11039.03

COLORADO REGISTERED 37254 CHRISTOPHER L. KRIEGER PROFESSIONAL ENGINEER 6/18/15

Sheet Revisions		
Date:	Comments	Init.

As Constructed
No Revisions:
Revised:
Void:

Region 4 RDM

CITY OF BOULDER

WONDERLAND CREEK - GREENWAYS IMPROVEMENT PROJECT

BOULDER STANDARD DETAILS

Designer: CLK	Structure Numbers	
Detailer: JHK		
Sheet Subset: BOULDER	Subset Sheets: B-3	

Project No./Code: STM 110-081

18405

Sheet Number: 440

PLOTTED: 6/19/2015 12:24:21 PM
NAME: P:\11-039.03 WONDERLAND CREEK LOWER REACH -FINAL DESIGN\CAD\11-039.03_DETAIL BOULDER.DWG

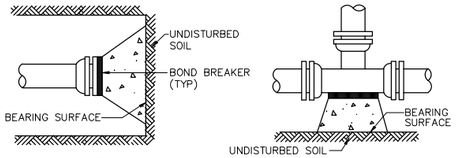

DEAD END

TEE

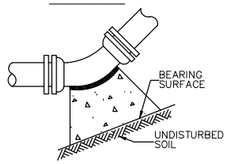

11 1/4°, 22 1/2°, 45° AND 90° BENDS

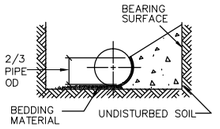

TYPICAL CROSS SECTION

MINIMUM BEARING SURFACE AREA IN SQUARE FEET

SIZE	TEE AND PLUG	90° BEND	45° BEND	22 1/2° BEND	11 1/4° BEND
4"	2.0	2.5	1.5	1.0	1.0
6"	4.0	5.5	3.0	1.5	1.0
8"	6.5	9.0	5.0	2.5	1.5
10"	10.0	14.0	7.5	4.0	2.0
12"	14.0	20.0	11.0	5.5	3.0
14"	19.0	27.0	14.5	7.5	4.0
16"	25.0	35.0	19.0	10.0	5.0
18"	31.5	44.5	24.0	12.5	6.5
20"	38.0	54.5	29.5	15.0	7.5
24"	55.5	78.5	42.5	22.0	11.0

NOTES:
1. BASED ON 250 PSI MAXIMUM PRESSURE AND 2000 LBS/FT² BEARING CAPACITY.
2. ALL FITTINGS MUST BE WRAPPED WITH POLYETHYLENE TO PREVENT CONCRETE FROM ADHERING TO BOLTS OR PIPES.
3. MAXIMUM JOINT DEFLECTION WITHOUT REACTION BLOCK IS 1+1/2°.
4. CONCRETE SHALL DEVELOP 3,000 PSI AT 28 DAYS.
5. JOINTS AND BOLTS SHALL BE ACCESSIBLE FOR REPAIRS.

DRAWN BY: JSH	CITY OF BOULDER, COLORADO	ISSUED: JULY 2, 1998
CHECKED BY: RJH	HORIZONTAL THRUST BLOCK	REVISED: OCT. 17, 2000
APPROVED BY: DIRECTOR OF PUBLIC WORKS		DRAWING NO. 5.14

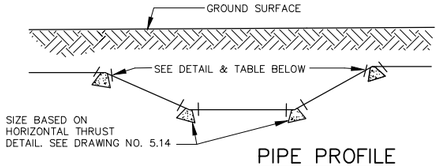

PIPE PROFILE

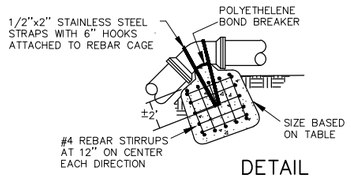

NOTE:
ALL FITTINGS MUST BE WRAPPED WITH POLYETHYLENE TO PREVENT CONCRETE FROM ADHERING TO BOLTS OR PIPE.

DETAIL

REQUIRED CUBIC YARDS OF CONCRETE *			
SIZE	11 1/4° BEND	22 1/2° BEND	45° BEND
4"	0.2	0.3	0.9
6"	0.4	0.7	2.1
8"	0.6	1.3	3.6
10"	1.0	1.9	5.6
12"	1.4	2.7	8.1
14"	1.9	3.8	11.1
16"	2.4	4.9	14.4
18"	3.1	6.2	18.3
20"	3.8	7.6	22.6
24"	5.5	10.7	32.5

* BASED ON 250 PSI MAXIMUM PRESSURE WITH NO SOIL BEARING PRESSURE

DRAWN BY: JSH	CITY OF BOULDER, COLORADO	ISSUED: JULY 2, 1998
CHECKED BY: RJH	VERTICAL THRUST BLOCK	REVISED: OCT. 17, 2000
APPROVED BY: DIRECTOR OF PUBLIC WORKS		DRAWING NO. 5.15

NOTES:
1. SHOULD ANY SITUATION ARISE OTHER THAN SHOWN CONCERNING THE DEPTH OR OBSTRUCTION OF SERVICE LINE OR PLACEMENT OF METER PIT, CALL THE CITY OF BOULDER ROW INSPECTOR.
2. METERS TO BE PLACED IN PUBLIC ROW OR EASEMENT. DO NOT PLACE IN SIDEWALK OR DRIVE.
3. PLACEMENT OF METER PIT SHALL BE 2' FROM CENTERLINE OF LID TO BACK EDGE OF CURBWALK. IF SIDEWALK IS SEPARATE FROM CURB, METER PIT SHALL BE INSTALLED ON STREET SIDE OF WALK 2' FROM FRONT SIDE OF WALK.
4. METER, LID, VALVE & FITTINGS SHALL BE PURCHASED FROM THE CITY OF BOULDER.
5. METER SHALL BE INSTALLED BY CITY.
6. CORPORATION STOP AND DOUBLE STRAP BRONZE SERVICE SADDLE REQUIRED FOR PVC WATER MAINS.

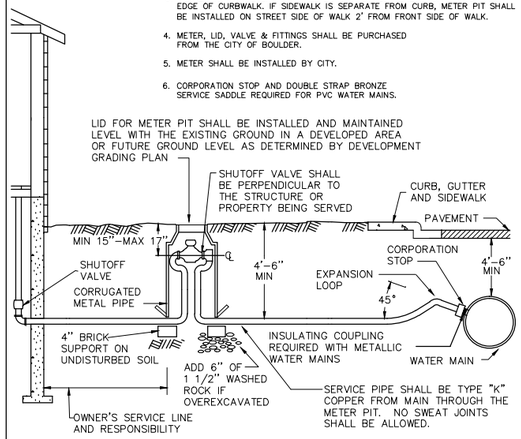

PROFILE

DRAWN BY: JSH	CITY OF BOULDER, COLORADO	ISSUED: JULY 2, 1998
CHECKED BY: RJH	STANDARD 3/4" – 1" SERVICE	REVISED: OCT. 17, 2000
APPROVED BY: DIRECTOR OF PUBLIC WORKS		DRAWING NO. 5.16A

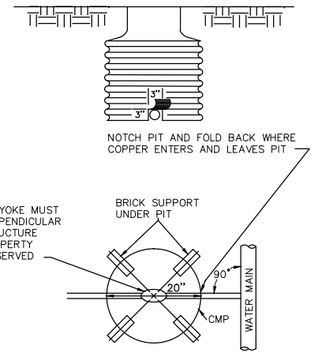

METER PIT PLAN

SEE DETAIL DRAWING NO. 5.16A FOR PROFILE VIEW

NOTES:
1. METERS TO BE PLACED IN PUBLIC ROW OR EASEMENT. DO NOT PLACE IN SIDEWALK OR DRIVE.
2. SHOULD ANY SITUATION ARISE OTHER THAN SHOWN CONCERNING THE DEPTH OR OBSTRUCTION OF SERVICE LINE OR THE PLACEMENT OF METER PIT, CALL THE CITY OF BOULDER ROW INSPECTOR.

DRAWN BY: JSH	CITY OF BOULDER, COLORADO	ISSUED: JULY 2, 1998
CHECKED BY: RJH	STANDARD METER PIT 3/4" – 1" SERVICES	REVISED: OCT. 17, 2000
APPROVED BY: DIRECTOR OF PUBLIC WORKS		DRAWING NO. 5.16B

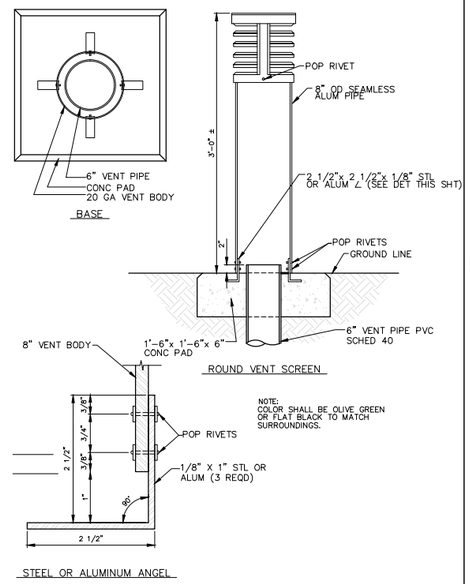

DRAWN BY: CSM	CITY OF BOULDER, COLORADO	ISSUED: JULY 2, 1998
CHECKED BY: BRK	STANDARD COMBINATION AIR VALVE MANHOLE	REVISED: SEPT 17, 2010
APPROVED BY: DIRECTOR OF PUBLIC WORKS		DRAWING NO. 5.22

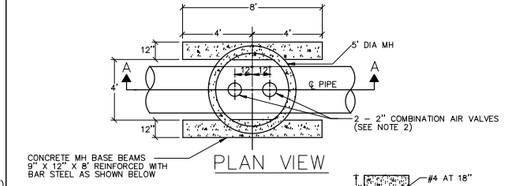

PLAN VIEW

FOOTING DETAIL

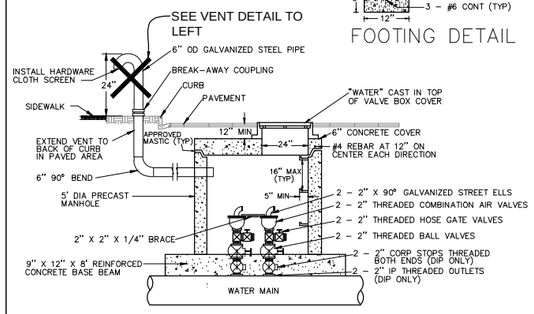

SECTION A–A

NOTES:
1. ALL PIPE AND FITTINGS INSIDE OF VAULT SHALL BE COPPER, BRASS OR BRONZE.
2. SINGLE VALVE CONFIGURATION ACCEPTABLE FOR MAINS 12" DIAMETER AND SMALLER.
3. USE WELD–O–LET INSTEAD OF CORP STOP ON STEEL PIPE ONLY.

DRAWN BY: CSM	CITY OF BOULDER, COLORADO	ISSUED: JAN. 1, 1997
CHECKED BY: RJH	STANDARD COMBINATION AIR VALVE MANHOLE	REVISED: _____
APPROVED BY: D.A. Rhodes DIRECTOR OF PUBLIC WORKS		DRAWING NO. 5.22 ARV.DWG

NOTES:
1. 4' MANHOLES SHALL BE USED FOR PIPES UP TO 24" DIAMETER.
2. 5' MANHOLES SHALL BE USED FOR PIPES FROM 27"–36" DIAMETER.
3. SPECIAL MANHOLES SHALL BE USED FOR PIPES LARGER THAN 36" DIAMETER.
4. MANHOLES LESS THAN OR EQUAL TO 6' FROM TOP OF CASTING TO INVERT SHALL HAVE FLAT TOPS WITH CONCENTRIC OPENING. ALL ADJUSTING RINGS, CASTINGS, INVERTS, BOTTOMS, ETC., SHALL BE SIMILAR TO SHOWN MANHOLE.
5. REFER TO SPECIFICATIONS FOR MATERIAL, INSTALLATION, TESTING, BACKFILL AND SURFACE RESTORATION REQUIREMENTS.
6. ECCENTRIC CONES WILL BE ALLOWED IF OPENING IS SET OVER CHANNEL AND STEPS ARE OFFSET TO BENCH INSTEAD OF DIRECTLY OVER CHANNEL.

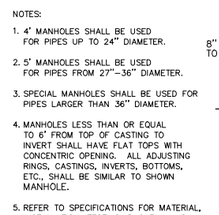

PLAN

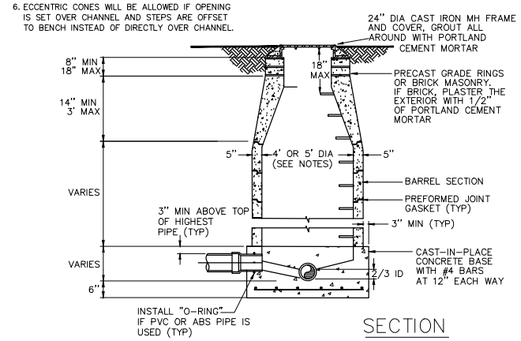

SECTION

DRAWN BY: JSH	CITY OF BOULDER, COLORADO	ISSUED: JULY 2, 1998
CHECKED BY: RJH	STANDARD SEWER MANHOLE	REVISED: OCT. 17, 2000
APPROVED BY: DIRECTOR OF PUBLIC WORKS		DRAWING NO. 6.01

Computer File Information	
Creation Date: 02/13/14	Initials: JHK
Last Modification Date: 06/18/15	Initials: JHK
Full Path: P:\11-039.03\CAD	
Drawing File Name: 11-039.03_DETAIL BOULDER.dwg	
AutoCAD 2014	Scale: AS SHOWN

MULLER ENGINEERING CO., INC.
CONSULTING ENGINEERS
777 S. WADSWORTH BLVD. 4-100
LAKEWOOD, COLORADO 80226
(303) 988-4939
MULLER
MEC PROJECT NO. 11039.03

COLORADO REGISTERED 37254 CHRISTOPHER L. KRIEGER PROFESSIONAL ENGINEER 6/18/15

Sheet Revisions		
Date:	Comments	Init.

As Constructed
No Revisions:
Revised:
Void:

URBAN DRAINAGE AND FLOOD CONTROL DISTRICT
CDOT Region 4 RDM
CITY OF BOULDER

WONDERLAND CREEK - GREENWAYS IMPROVEMENT PROJECT
BOULDER STANDARD DETAILS

Designer: CLK	Structure Numbers	
Detailer: JHK		
Sheet Subset: BOULDER	Subset Sheets: B-4	

Project No./Code
STM 110-081
18405
Sheet Number: 441

PLOTTED: 6/19/2015 12:24:24 PM
NAME: P:\11-039.03 WONDERLAND CREEK LOWER REACH-FINAL DESIGN\CAD\11-039.02_DETAIL BOULDER.DWG

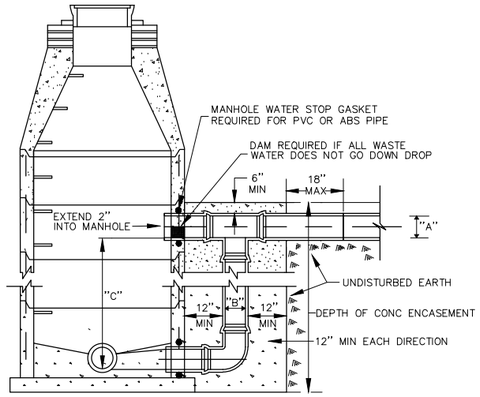

"A" PIPE DIA	"B" PIPE DIA
8"	8"
10"	10"
12"	12"
15"	12"
18"	15"
21"	18"
24"	18"
27"	18"
30"	18"
36"	18"
42"	24"
48"	30"

NOTES:

1. DROP MANHOLES ARE REQUIRED WHEN "C" ≥ 2 FEET.
2. SEE STANDARD SEWER MANHOLE DETAIL DRAWING NO. 6.01.

DRAWN BY: JSH CHECKED BY: RJH APPROVED BY: DIRECTOR OF PUBLIC WORKS	CITY OF BOULDER, COLORADO STANDARD DROP SEWER MANHOLE	ISSUED: JULY 2, 1998 REVISED: OCT. 17, 2000 DRAWING NO. 6.02	

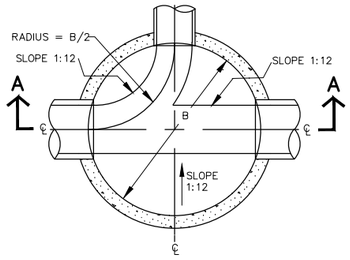

PLAN

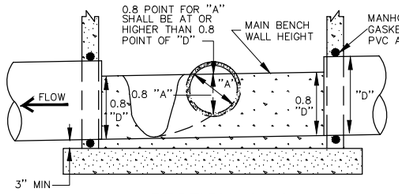

SECTION A–A

DRAWN BY: JSH CHECKED BY: RJH APPROVED BY: DIRECTOR OF PUBLIC WORKS	CITY OF BOULDER, COLORADO MANHOLE INVERT	ISSUED: JULY 2, 1998 REVISED: OCT. 17, 2000 DRAWING NO. 6.03	

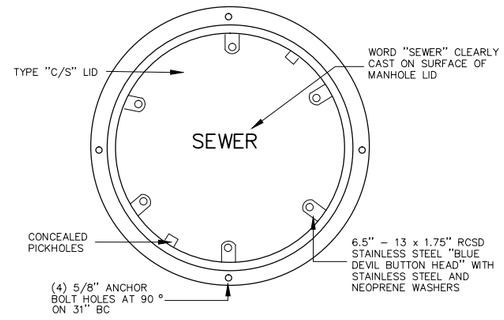

NOTE: STANDARD FRAME AND COVER FOR MANHOLE LOCATED OUTSIDE DEDICATED STREET ROW AND WHERE SURFACE RUNOFF CANNOT BE AVOIDED.

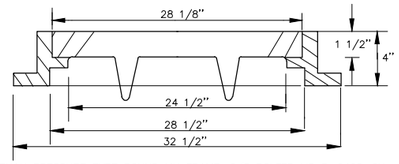

NEENAH PRESSURE TYPE ROUND MH FRAME, C/S BOLTED LID R–6462–GH OR APPROVED EQUAL (SUBMIT TO CITY FOR APPROVAL)

DRAWN BY: JSH CHECKED BY: RJH APPROVED BY: DIRECTOR OF PUBLIC WORKS	CITY OF BOULDER, COLORADO STANDARD MANHOLE BOLT–DOWN WATER–TIGHT FRAME AND COVER	ISSUED: JULY 2, 1998 REVISED: OCT. 17, 2000 DRAWING NO. 6.04	

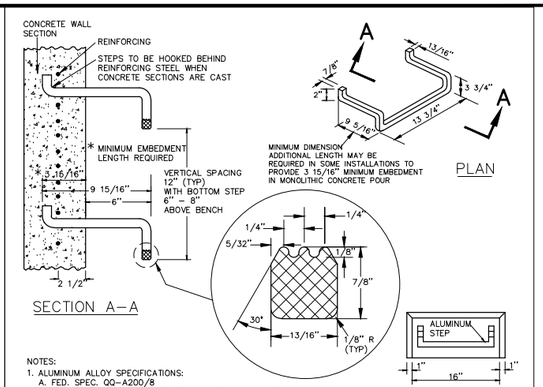

NOTES:

1. ALUMINUM ALLOY SPECIFICATIONS:
   A. FED. SPEC. QQ–A200/8 (ALUMINUM–MAGNESIUM–SILICATE ALLOY, ASTM–B221)
   B. MINIMUM TENSILE STRENGTH = 38,000 PSI
   C. MINIMUM YIELD STRENGTH = 35,00 PSI
   D. MINIMUM ELONGATION = 10% IN 2 INCHES
2. MINIMUM LOAD CAPACITY (APPLIED AT CENTER OF STEP) 1000 POUNDS PER STEP.
3. WEIGHT PER STEP = 2.23 POUNDS.
4. STEPS TO BE CAST, UNALTERED, IN MANHOLE WALL IN A STRAIGHT LINE, VERTICALLY, AT SAME TIME THE BARREL OR CONE SECTIONS ARE CAST.
5. TOE POCKETS ARE REQUIRED IN STORM SEWER MANHOLES IF TOP OF BENCH IS MORE THAN 16" ABOVE INVERT. TOE POCKETS ARE NOT REQUIRED IN SANITARY SEWER MANHOLES UNLESS OTHERWISE SPECIFIED.
6. COVER EMBEDDED PORTION OF ALUMINUM STEP WITH COAL TAR ENAMEL PRIOR TO EMBEDDING IN CONCRETE.

DETAILS – TOE POCKETS

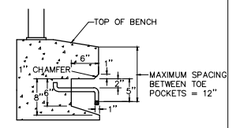

DRAWN BY: JSH CHECKED BY: RJH APPROVED BY: DIRECTOR OF PUBLIC WORKS	CITY OF BOULDER, COLORADO STANDARD EXTRUDED ALUMINUM MANHOLE STEP	ISSUED: JULY 2, 1998 REVISED: OCT. 17, 2000 DRAWING NO. 6.05A	

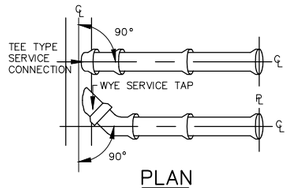

PLAN

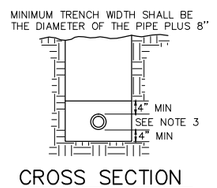

CROSS SECTION

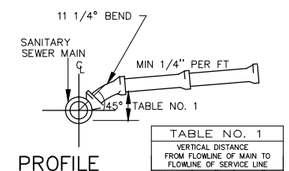

PROFILE

TABLE NO. 1 VERTICAL DISTANCE FROM FLOWLINE OF MAIN TO FLOWLINE OF SERVICE LINE		
MAIN SIZE	4" SERVICE	6" SERVICE
8"	6"	10"
10"	11"	12"
12"	12"	13"
15"	15"	16.5"

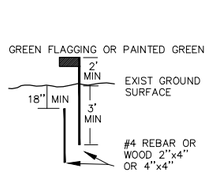

MARKER POST
(AT SERVICE STUB OUT)

NOTES:

1. ALL SERVICE LINES SHALL BE 4" MINIMUM IN DIAMETER.
2. THE MINIMUM SLOPE FOR 4" OR 6" SERVICE LINES SHALL BE 1\4" PER FOOT.
3. BEDDING FOR HOUSE CONNECTION WITHIN CITY ROW SHALL BE THE SAME AS FOR SEWER MAIN, LAID TO A MINIMUM DEPTH OF 4" BELOW THE PIPE INVERT AND 4" ABOVE THE TOP OF THE PIPE.
4. ALL TAPS ARE TO BE MADE BY THE CITY OF BOULDER, UNLESS OTHERWISE AUTHORIZED BY THE UTILITY DIVISION.
5. SERVICE LINES LARGER THAN 6" MUST BE CONNECTED TO THE MAIN AT A MANHOLE.
6. SERVICE LINE WILL BE PLUGGED AT THE PROPERTY LINE WITH APPROPRIATE PLUG FOR TYPE OF LINE INSTALLED UNTIL CONNECTED TO BUILDING. AFTER ABANDONMENT OF A SERVICE LINE IT MUST BE PLUGGED 5' INSIDE THE PROPERTY LINE.
7. COMPACTION OF BACKFILL SHALL BE AS STATED IN THE CITY OF BOULDER, STANDARD SPECIFICATIONS.

DRAWN BY: JSH CHECKED BY: RJH APPROVED BY: DIRECTOR OF PUBLIC WORKS	CITY OF BOULDER, COLORADO SEWER SERVICE LINE	ISSUED: JULY 2, 1998 REVISED: OCT. 17, 2000 DRAWING NO. 6.06	

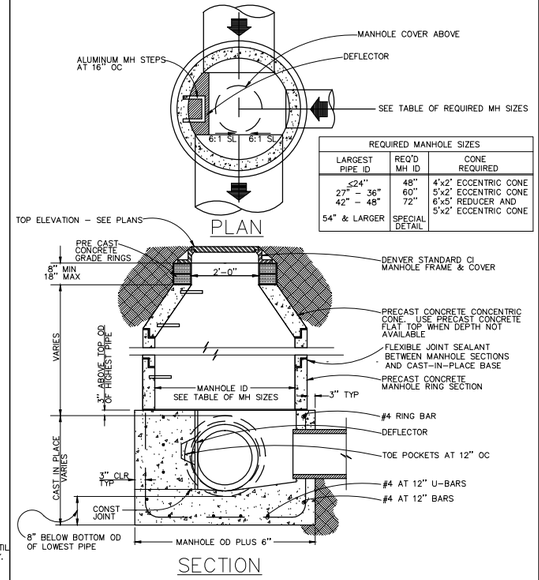

REQUIRED MANHOLE SIZES		
LARGEST PIPE ID	REQ'D MH ID	CONE REQUIRED
≤24"	48"	4'x2' ECCENTRIC CONE
27" – 36"	60"	5'x2' ECCENTRIC CONE
42" – 48"	72"	6'x5' REDUCER AND 5'x2' ECCENTRIC CONE
54" & LARGER	SPECIAL DETAIL	

SECTION

DRAWN BY: JSH CHECKED BY: RJH APPROVED BY: DIRECTOR OF PUBLIC WORKS	CITY OF BOULDER, COLORADO STORM SEWER MANHOLE	ISSUED: JULY 2, 1998 REVISED: OCT. 17, 2000 DRAWING NO. 7.01	

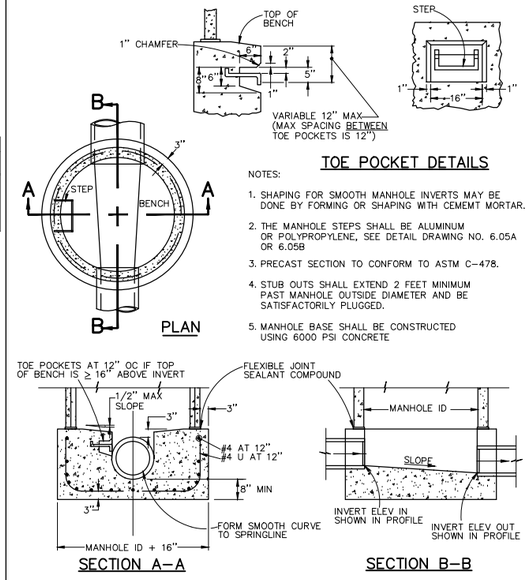

DRAWN BY: JSH CHECKED BY: RJH APPROVED BY: DIRECTOR OF PUBLIC WORKS	CITY OF BOULDER, COLORADO STORM SEWER MANHOLE BASE	ISSUED: JULY 2, 1998 REVISED: OCT. 17, 2000 DRAWING NO. 7.02	

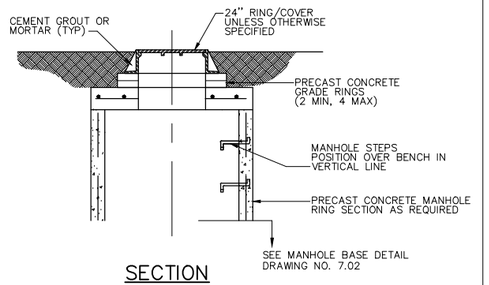

SECTION

NOTES:

1. PRECAST SECTIONS TO CONFORM TO ASTM C–478.
2. RING/COVER TO BE SET ON FULL BED OF MORTAR.

DRAWN BY: JSH CHECKED BY: RJH APPROVED BY: DIRECTOR OF PUBLIC WORKS	CITY OF BOULDER, COLORADO FLAT TOP FOR FOR SHALLOW MANHOLES LESS THAN 6' IN HEIGHT	ISSUED: JULY 2, 1998 REVISED: OCT. 17, 2000 DRAWING NO. 7.03	

Computer File Information		
Creation Date: 02/13/14	Initials: JHK	
Last Modification Date: 06/18/15	Initials: JHK	
Full Path: P:\11-039.03\CAD		
Drawing File Name: 11-039.03_DETAIL BOULDER.dwg		
AutoCAD 2014	Scale: AS SHOWN	

MULLER ENGINEERING CO., INC.
CONSULTING ENGINEERS
777 S. WADSWORTH BLVD. 4-100
LAKEWOOD, COLORADO 80226
(303) 988-4939

MEC PROJECT NO. 11039.03

COLORADO REGISTERED CHRISTOPHER L. KRAEGER 37254 6/18/15 PROFESSIONAL ENGINEER

Sheet Revisions		
Date:	Comments	Init.

As Constructed
No Revisions:
Revised:
Void:

UDFCD URBAN DRAINAGE AND FLOOD CONTROL DISTRICT

CDOT Region 4 RDM

CITY OF BOULDER

WONDERLAND CREEK - GREENWAYS IMPROVEMENT PROJECT

BOULDER STANDARD DETAILS

Designer:	CLK	Structure Numbers	
Detailer:	JHK		
Sheet Subset:	BOULDER	Subset Sheets:	B-5

Project No./Code
STM 110-081
18405
Sheet Number: 442

PLOTTED: 6/19/2015 12:24:27 PM
NAME: P:\11-039.03 WONDERLAND CREEK - LOWER REACH - FINAL DESIGN\CAD\11-039.03_DETAIL BOULDER.DWG

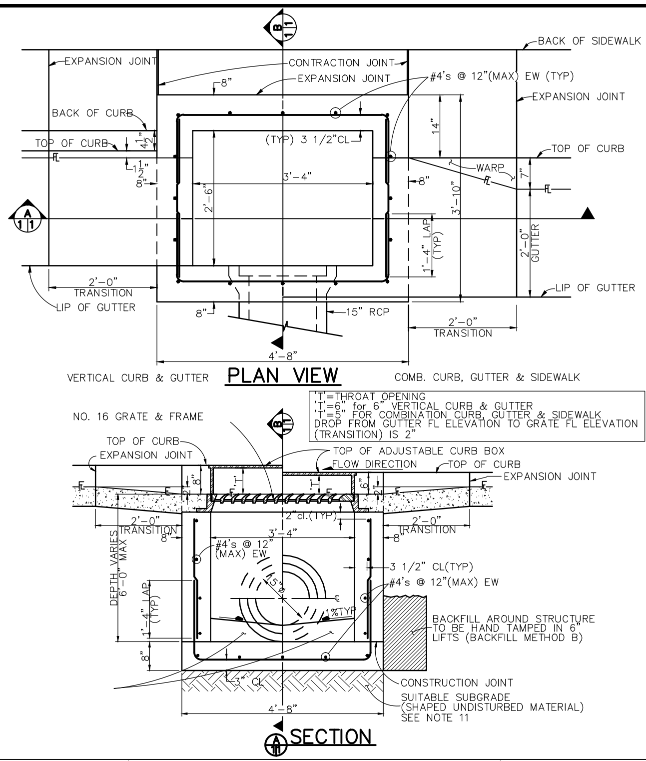

DRAWN BY: JSH CHECKED BY: RJH APPROVED BY: DIRECTOR OF PUBLIC WORKS	CITY OF BOULDER, COLORADO SINGLE NO. 16 OPEN THROAT INLET ADJUSTABLE CURB BOX	ISSUED: JULY 2, 1998 REVISED: OCT. 17, 2000	DRAWING NO. 7.04A

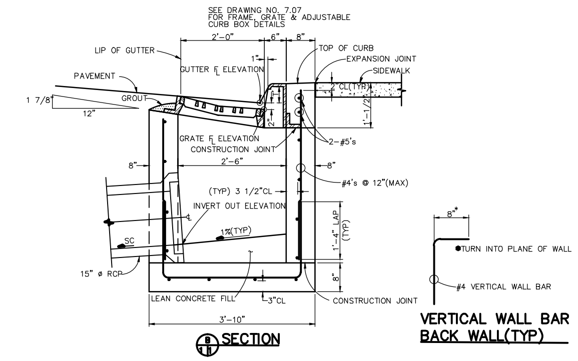

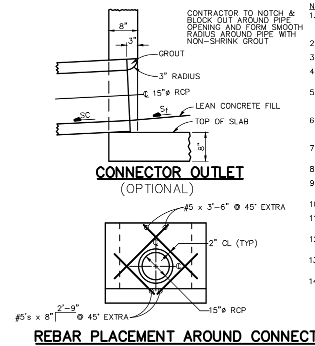

NOTES
1. FOR PAYMENT PURPOSES, INLET STRUCTURE SHALL ALSO INCLUDE 2'-0" CURB AND GUTTER TRANSITION SECTION AT EACH END OF INLET PLUS SIDEWALK SECTIONS WHERE REQUIRED BEHIND INLET STRUCTURE AND TRANSITION SECTIONS.
2. FLOOR SLOPE MAY BE POURED MONOLITHIC WITH BASE.
3. SC=SLOPE OF CONNECTOR=1% MIN.
4. UNLESS OTHERWISE SPECIFIED ON THE DRAWINGS OR OTHERWISE APPROVED, ALL #16 INLETS SHALL BE CONSTRUCTED WITH AN ADJUSTABLE CAST IRON CURB BOX.
5. DESIGN CONDITIONS FOR INLET ALLOWS DEPTHS OF 6' (MAX). FOR INLETS MORE THAN 6' IN DEPTH, SHOP DRAWINGS AND DESIGN ANALYSIS SHALL BE SUBMITTED FOR APPROVAL.
6. ALL REINFORCING STEEL SHALL BE ASTM, A-615, GRADE 60 DEFORMED BARS. DIAMETER OF BEND MEASURED ON THE INSIDE OF THE BAR SHALL BE MINIMUM OF 6 BAR DIAMETERS.
7. ALL WORK SHALL CONFORM TO AASHTO "STANDARD SPECIFICATIONS FOR HIGHWAY BRIDGES" 1990 EDITION.
8. CONCRETE SHALL HAVE A 28 DAY STRENGTH OF 4000 PSI.
9. SUB-GRADE SHALL BE A GRADATION EQUAL TO CLASS B BEDDING COMPACTED TO 95% MAXIMUM DRY DENSITY, AASHTO DESIGNATION T-180.
10. NO FORMWORK SHALL REMAIN INSIDE STRUCTURE WHEN COMPLETE.
11. SUB-GRADE SHALL BE SHAPED UNDISTURBED MATERIAL OR OVER EXCAVATED AND BACKFILLED WITH CLASS B BEDDING MATERIAL.
12. SPLICING OF REINFORCING STEEL SHALL BE PERMITTED ONLY WHERE DETAILED IN DRAWINGS.
13. INLET WALLS SHALL BE FORMED BOTH INSIDE AND OUTSIDE. CASTINGS OF SIDEWALLS AGAINST EARTH IS NOT PERMITTED.
14. LEAN CONCRETE FILL TO BE f'_c =2000 PSI.

DRAWN BY: JSH CHECKED BY: RJH APPROVED BY: DIRECTOR OF PUBLIC WORKS	CITY OF BOULDER, COLORADO SINGLE NO. 16 OPEN THROAT INLET ADJUSTABLE CURB BOX	ISSUED: JULY 2, 1998 REVISED: OCT. 17, 2000	DRAWING NO. 7.04B

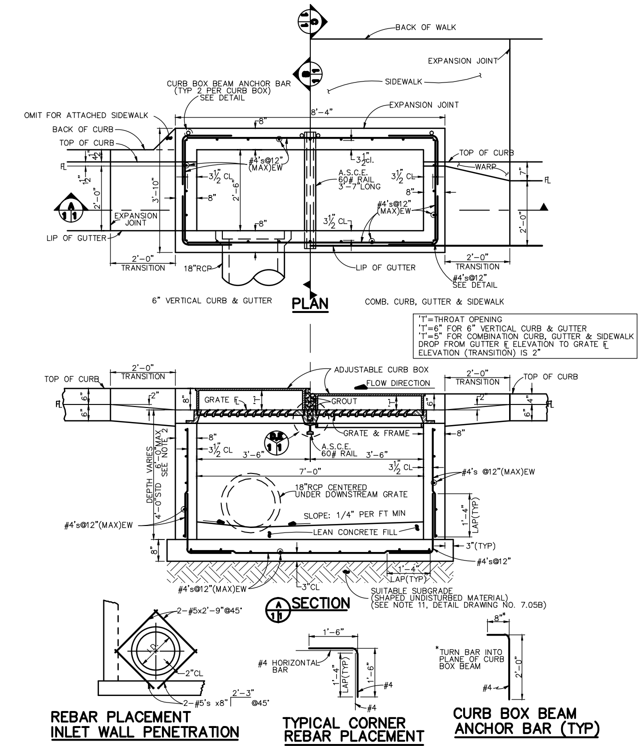

DRAWN BY: JSH CHECKED BY: RJH APPROVED BY: DIRECTOR OF PUBLIC WORKS	CITY OF BOULDER, COLORADO DOUBLE NO. 16 OPEN THROAT INLET ADJUSTABLE CURB BOX	ISSUED: JULY 2, 1998 REVISED: OCT. 17, 2000	DRAWING NO. 7.05A

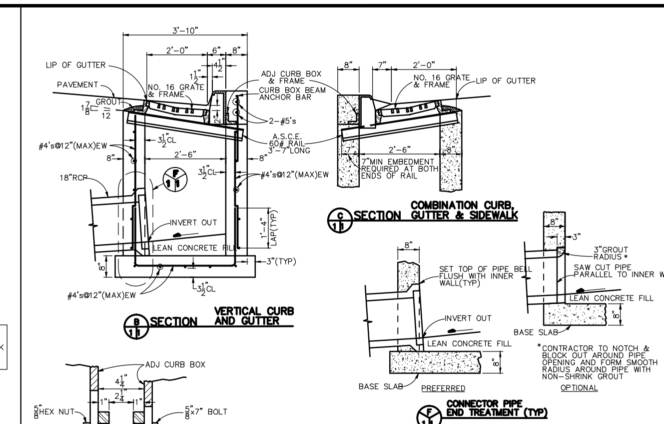

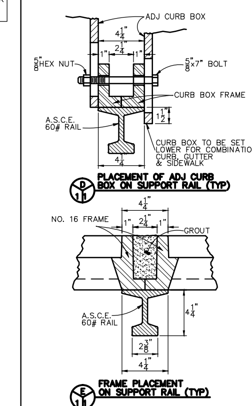

NOTES:
1. FOR PAYMENT PURPOSES, INLET STRUCTURE SHALL ALSO INCLUDE 2'-0" CURB AND GUTTER TRANSITION SECTION AT EACH END OF INLET PLUS SIDEWALK SECTIONS WHERE REQUIRED BEHIND INLET STRUCTURE AND TRANSITION SECTIONS.
2. STANDARD INLET DEPTH=4'-0". INLETS DEEPER THAN 6' MAXIMUM DEPTH SHALL REQUIRE SUBMISSION OF SHOP DRAWINGS AND DESIGN ANALYSIS FOR APPROVAL.
3. MINIMUM CONNECTOR PIPE DIAMETER=16". MIN SLOPE=1.8%.
4. ALL WORK SHALL CONFORM TO AASHTO "STANDARD SPECIFICATIONS FOR HIGHWAY BRIDGES" 1990 EDITION.
5. CONCRETE SHALL HAVE A 28 DAY STRENGTH OF 4000 PSI.
6. FLOOR SLOPE MAY BE POURED MONOLITHIC WITH BASE.
7. NO FORMWORK SHALL REMAIN INSIDE STRUCTURE WHEN COMPLETED.
8. ALL REINFORCING STEEL SHALL BE ASTM, A-615, GRADE 60 DEFORMED BARS. DIAMETER OF BEND MEASURED ON THE INSIDE OF THE BAR SHALL BE A MINIMUM OF 6 BAR DIAMETERS.
9. ALL REINFORCING STEEL SHALL BE 2" (MIN) CLEARANCE FROM FORMED SURFACES, AND 3" CLEARANCE AGAINST EARTH UNLESS OTHERWISE NOTED.
10. SPLICING OF REINFORCING STEEL SHALL BE PERMITTED ONLY WHERE DETAILED IN DRAWINGS.
11. SUB-GRADE SHALL BE SHAPED UNDISTURBED MATERIAL OR OVER EXCAVATED AND BACKFILLED WITH CLASS B BEDDING MATERIAL.
12. SUB-GRADE SHALL BE A GRADATION EQUAL TO CLASS B BEDDING COMPACTED TO 95% MAXIMUM DRY DENSITY, AASHTO DESIGNATION T-180.
13. BACKFILL AROUND STRUCTURE TO BE HAND TAMPERED IN 6" LIFTS. (BACKFILL METHOD B).
14. INLET WALLS SHALL BE FORMED BOTH INSIDE AND OUTSIDE. CASTINGS OF SIDEWALLS AGAINST EARTH IS NOT PERMITTED.
15. LEAN CONCRETE FILL TO BE f'_c =2000 PSI.
16. DOUBLE AND TRIPLE NO. 16 INLETS ARE TO BE INSTALLED ON A TANGENT (STRAIGHT) PORTION OF CURB ONLY AND SHALL NOT BE INSTALLED WITHIN A CURB RADIUS OR OTHER CURVILINEAR CURB AND GUTTER SECTIONS.

DRAWN BY: JSH CHECKED BY: RJH APPROVED BY: DIRECTOR OF PUBLIC WORKS	CITY OF BOULDER, COLORADO DOUBLE NO. 16 OPEN THROAT INLET ADJUSTABLE CURB BOX	ISSUED: JULY 2, 1998 REVISED: OCT. 17, 2000	DRAWING NO. 7.05B

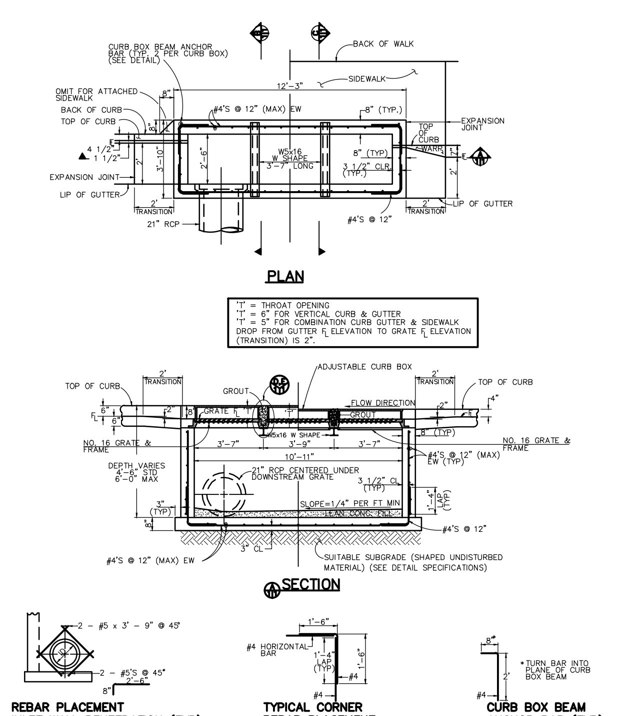

DRAWN BY: JSH CHECKED BY: RJH APPROVED BY: DIRECTOR OF PUBLIC WORKS DIRECTOR OF PUBLIC WORKS	CITY OF BOULDER, COLORADO TRIPLE NO. 16 OPEN THROAT INLET ADJUSTABLE CURB BOX	ISSUED: JULY 2, 1998 REVISED: OCT. 17, 2000	DRAWING NO. 7.06A

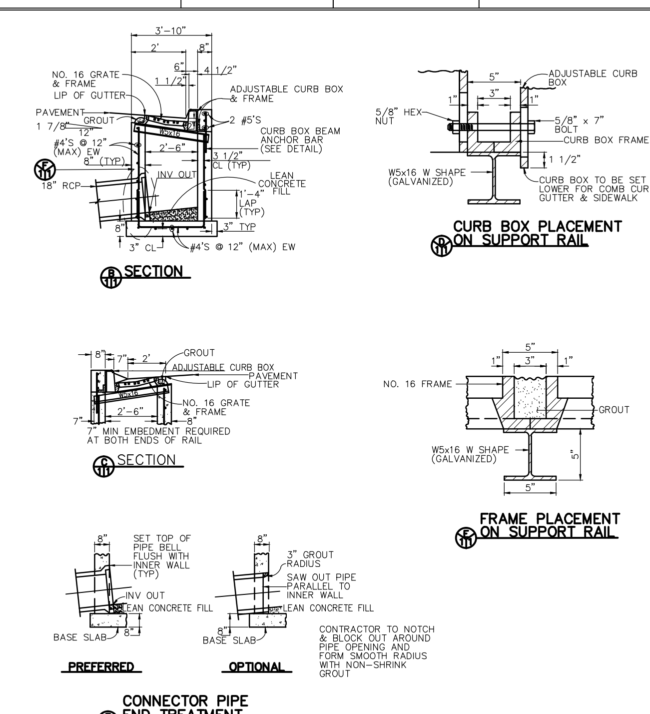

DRAWN BY: JSH CHECKED BY: RJH APPROVED BY: DIRECTOR OF PUBLIC WORKS	CITY OF BOULDER, COLORADO TRIPLE NO. 16 OPEN THROAT INLET ADJUSTABLE CURB BOX	ISSUED: JULY 2, 1998 REVISED: OCT. 17, 2000	DRAWING NO. 7.06B

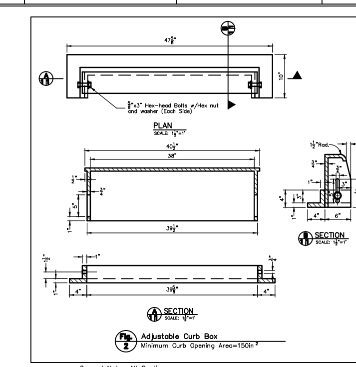

General Notes All Castings
1. All castings shall conform to A.S.T.M. A-48 (Cl. 35b) with a minimum tensile strength of 35 ksi.
2. Castings shall not be dipped or painted prior to field inspection. Once individual castings are checked and approved by the Division for project usage, they shall be coated with an approved material.
3. All castings shall be heavy duty, and capable of withstanding AASHTO H20 loading.

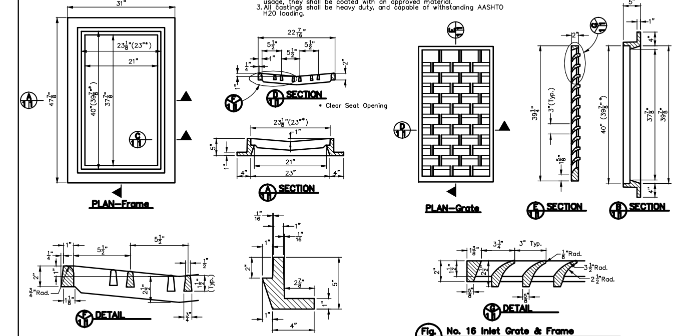

DRAWN BY: CSM CHECKED BY: RJH APPROVED BY: DIRECTOR OF PUBLIC WORKS	CITY OF BOULDER, COLORADO NO. 16 INLET GRATE AND FRAME ADJUSTABLE CURB BOX	ISSUED: JULY 2, 1998 REVISED: OCT. 17, 2000	DRAWING NO. 7.07

PLOTTED: 6/19/2015 12:24:31 PM
NAME: P:\11-039.03 WONDERLAND CREEK LOWER REACH -FINAL DESIGN\CAD\11-039.03_DETAIL BOULDER.DWG

Computer File Information	
Creation Date: 02/13/14	Initials: JHK
Last Modification Date: 06/18/15	Initials: JHK
Full Path: P:\11-039.03\CAD	
Drawing File Name: 11-039.03_DETAIL BOULDER.dwg	
AutoCAD 2014	Scale: AS SHOWN

MULLER ENGINEERING CO., INC.
CONSULTING ENGINEERS
777 S. WADSWORTH BLVD. 4-100
LAKEWOOD, COLORADO 80226
(303) 988-4939
MEC PROJECT NO. 11039.03

COLORADO REGISTERED PROFESSIONAL ENGINEER CHRISTOPHER L. KROEGER 37254 6/18/15

Sheet Revisions		
Date:	Comments	Init.

As Constructed
No Revisions:
Revised:
Void:

URBAN DRAINAGE AND FLOOD CONTROL DISTRICT
CDOT Region 4 RDM
CITY OF BOULDER

WONDERLAND CREEK - GREENWAYS IMPROVEMENT PROJECT
BOULDER STANDARD DETAILS

Designer:	CLK	Structure Numbers	
Detailer:	JHK		
Sheet Subset:	BOULDER	Subset Sheets:	B-6

Project No./Code
STM 110-081
18405
Sheet Number: 443