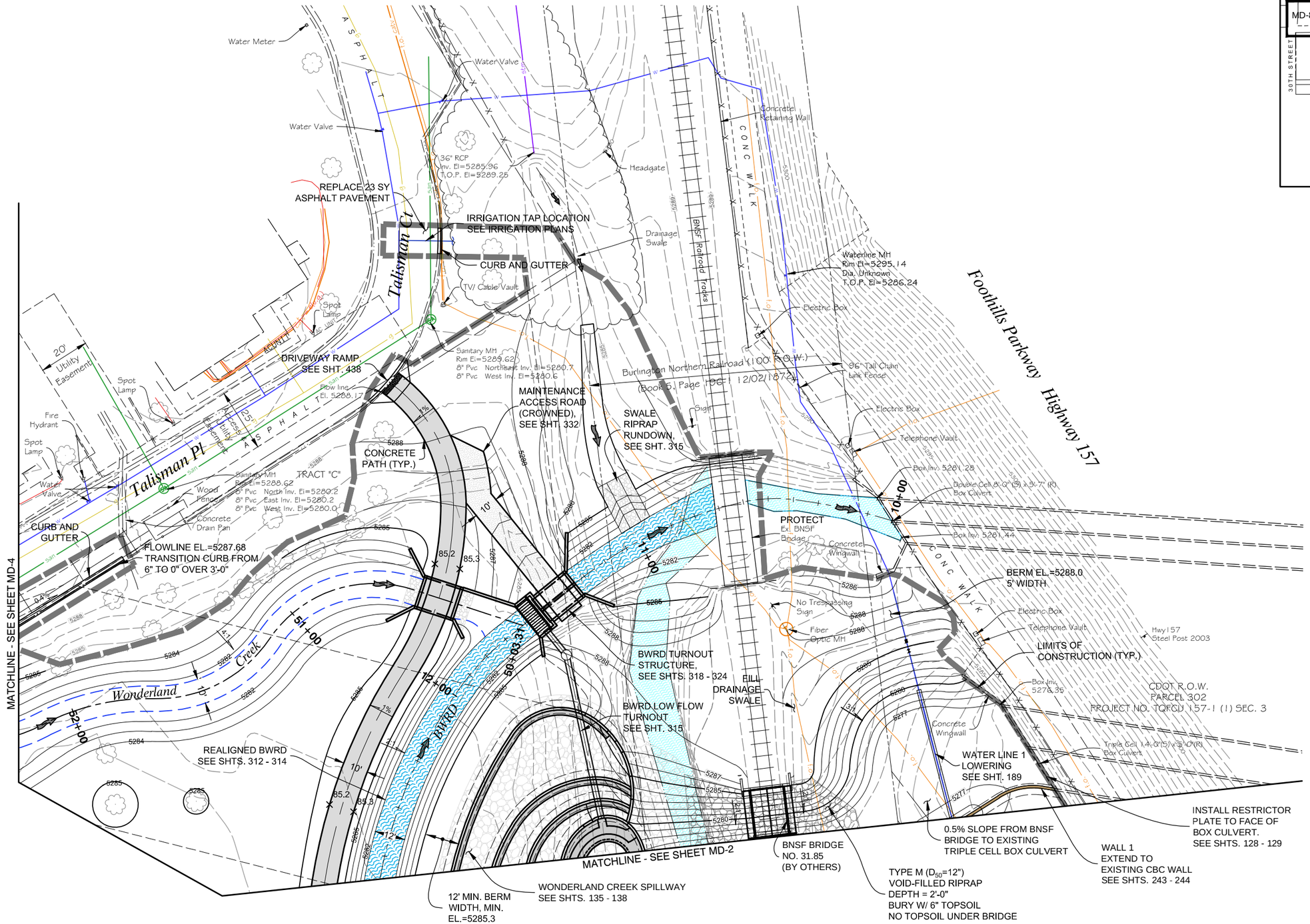

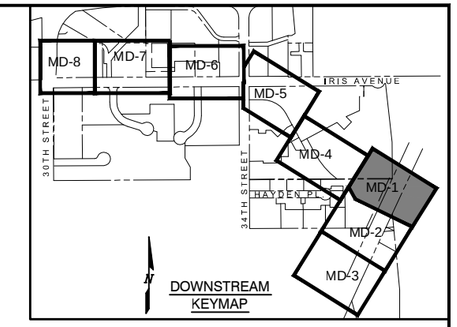

NOTES:

1. MAINTENANCE ACCESS ROAD GRADE SHALL VARY FROM A CROSS SLOPE AT THE CONCRETE PATH CONNECTION TO CROWNED AT THE CENTERLINE WITH EL.=5288.55. SEE SHEET 320 FOR ADDITIONAL DETAIL.

Computer File Information		
Creation Date: 07/18/13	Initials: JHK	
Last Modification Date: 06/18/15	Initials: JHK	
Full Path: P:\11-039.03\CAD		
Drawing File Name: 11-039.03_WC PLANS.dwg		
AutoCAD 2014	Scale: AS SHOWN	FEET

MULLER ENGINEERING CO., INC.
CONSULTING ENGINEERS
777 S. WADSWORTH BLVD. 4-100
LAKEWOOD, COLORADO 80226
(303) 988-4939
MULLER
MEC PROJECT NO. 11039.03

COLORADO REGISTERED PROFESSIONAL ENGINEER CHRISTOPHER L. KRIEGER 37254 6/18/15

Sheet Revisions		
Date:	Comments	Init.

As Constructed
No Revisions:
Revised:
Void:

Region 4 RDM
CITY OF BOULDER

WONDERLAND CREEK - GREENWAYS IMPROVEMENT PROJECT
DRAINAGEWAY IMPROVEMENTS PLAN

Designer:	CLK	Structure Numbers	
Detailer:	JHK		
Sheet Subset:	DRAINAGE	Subset Sheets:	MD-1

Project No./Code
STM 110-081
18405
Sheet Number: 95

PLOTTED: 6/19/2015 10:32:09 AM
NAME: P:\11-039.03 WONDERLAND CREEK LOWER REACH - FINAL DESIGN\CAD\11-039.03_WC PLANS.DWG

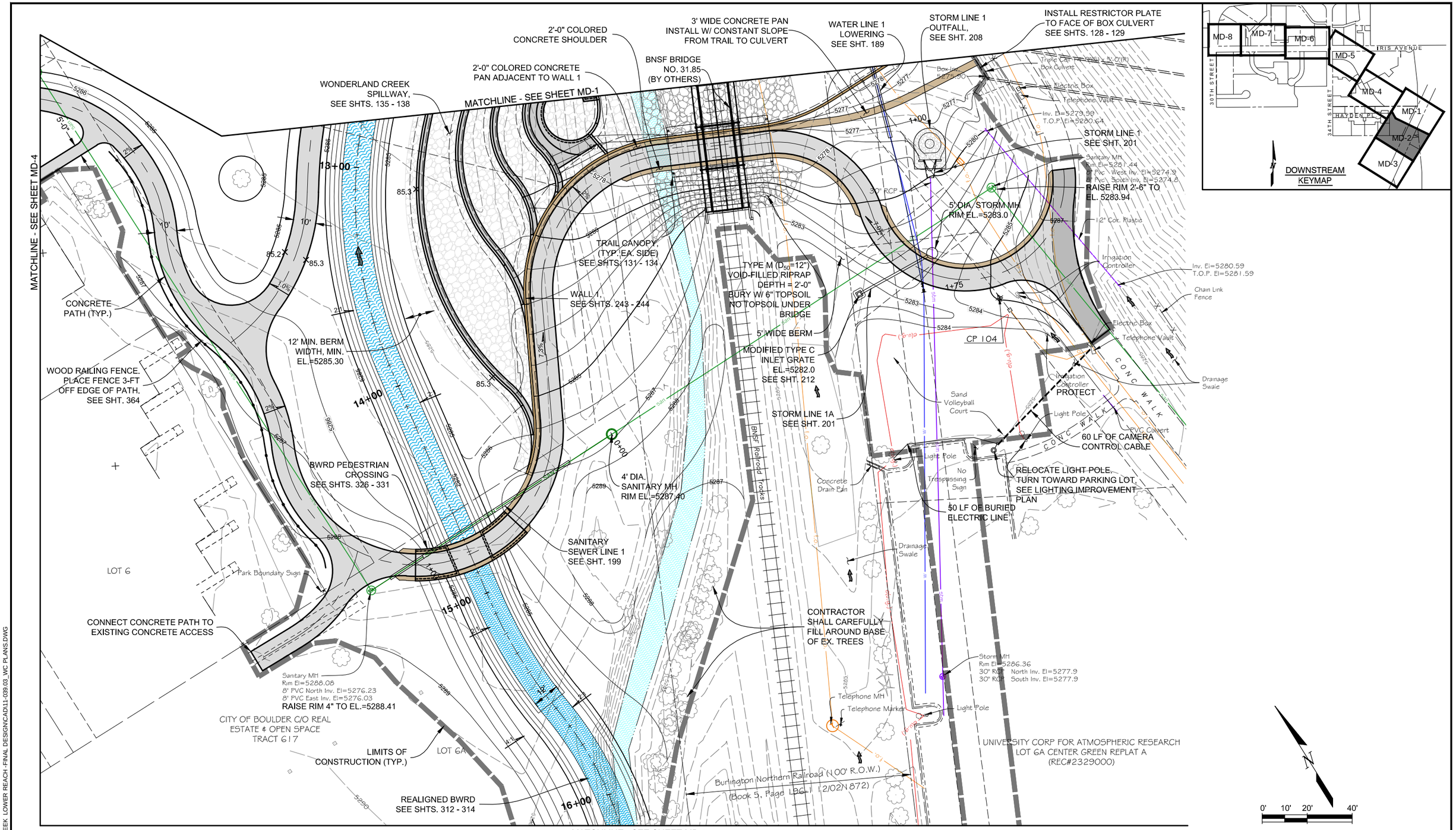

Computer File Information		
Creation Date: 07/18/13	Initials: JHK	
Last Modification Date: 06/18/15	Initials: JHK	
Full Path: P:\11-039.03\CAD		
Drawing File Name: 11-039.03_WC PLANS.dwg		
AutoCAD 2014	Scale: AS SHOWN	FEET

MULLER ENGINEERING CO., INC.
CONSULTING ENGINEERS
777 S. WADSWORTH BLVD. 4-100
LAKEWOOD, COLORADO 80226
(303) 988-4939
MULLER
MEC PROJECT NO. 11039.03

COLORADO REGISTERED PROFESSIONAL ENGINEER CHRISTOPHER L. KREGER 37254 6/18/15

Sheet Revisions		
Date:	Comments	Init.

As Constructed
No Revisions:
Revised:
Void:

DRAINAGE AND FLOOD CONTROL DISTRICT
CO CDOT Region 4 RDM
CITY OF BOULDER

WONDERLAND CREEK - GREENWAYS IMPROVEMENT PROJECT
DRAINAGEWAY IMPROVEMENTS PLAN

Designer:	CLK	Structure Numbers	
Detailer:	JHK		
Sheet Subset:	DRAINAGE	Subset Sheets:	MD-2

Project No./Code
STM 110-081
18405
Sheet Number: 96

PLOTTED: 6/19/2015 10:32:38 AM
NAME: P:\11-039.03 WONDERLAND CREEK LOWER REACH -FINAL DESIGN\CAD\11-039.03_WC PLANS.DWG

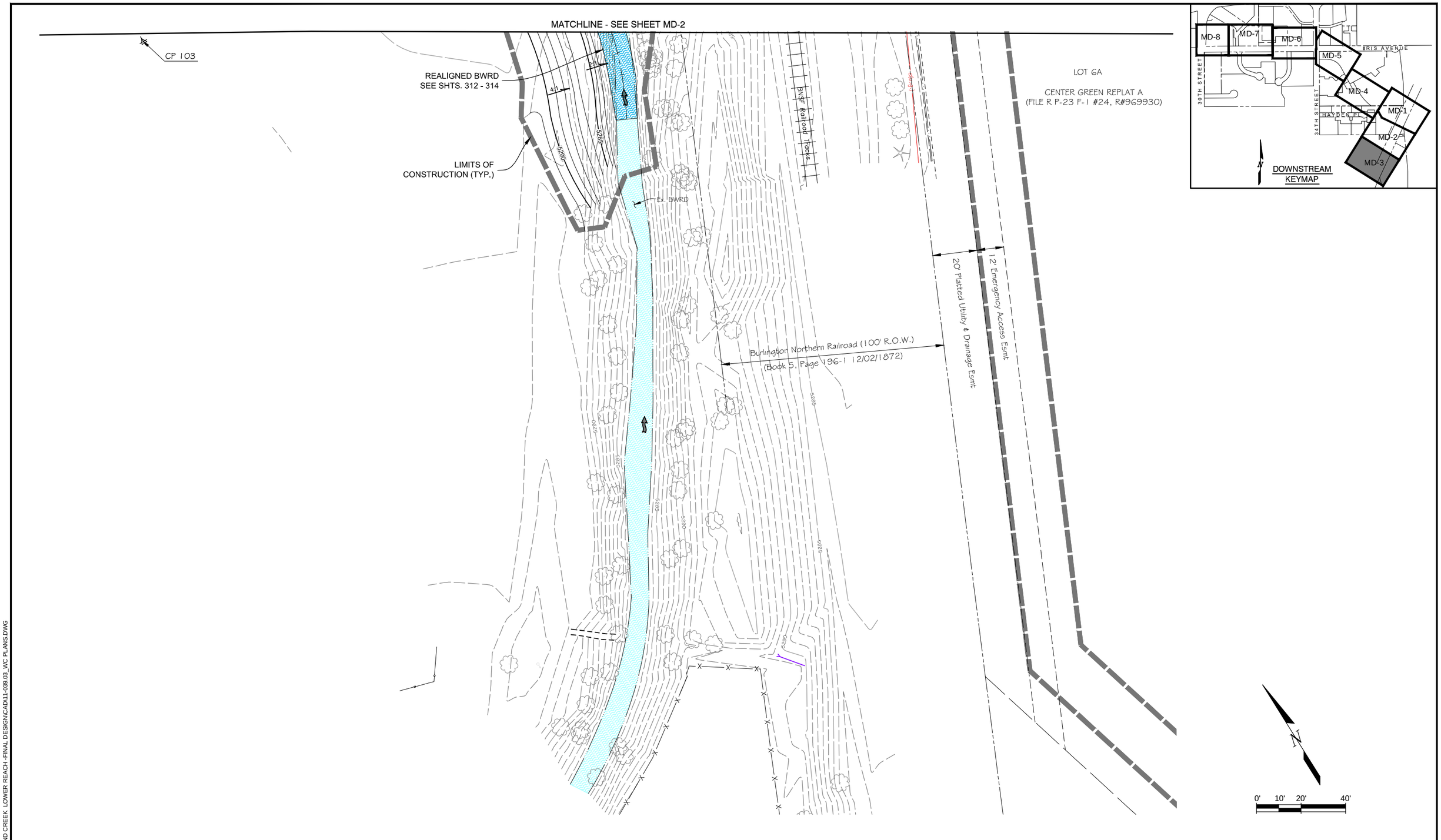

Computer File Information		
Creation Date: 07/18/13	Initials: JHK	
Last Modification Date: 06/18/15	Initials: JHK	
Full Path: P:\11-039.03\CAD		
Drawing File Name: 11-039.03_WC PLANS.dwg		
AutoCAD 2014	Scale: AS SHOWN	FEET

MULLER ENGINEERING CO., INC.
CONSULTING ENGINEERS
777 S. WADSWORTH BLVD. 4-100
LAKEWOOD, COLORADO 80226
(303) 988-4939

MULLER

MEC PROJECT NO. 11039.03

COLORADO REGISTERED PROFESSIONAL ENGINEER CHRISTOPHER L. KADGER 37254 6/18/15

Sheet Revisions		
Date:	Comments	Init.

As Constructed
No Revisions:
Revised:
Void:

Region 4 RDM

CITY OF BOULDER

WONDERLAND CREEK - GREENWAYS IMPROVEMENT PROJECT

DRAINAGEWAY IMPROVEMENTS PLAN

Designer:	CLK	Structure Numbers	
Detailer:	JHK		
Sheet Subset:	DRAINAGE	Subset Sheets:	MD-3

Project No./Code
STM 110-081
18405
Sheet Number: 97

PLOTTED: 6/19/2015 10:33:01 AM
NAME: P:\11-039.03 WONDERLAND CREEK LOWER REACH -FINAL DESIGN\CAD\11-039.03_WC PLANS.DWG

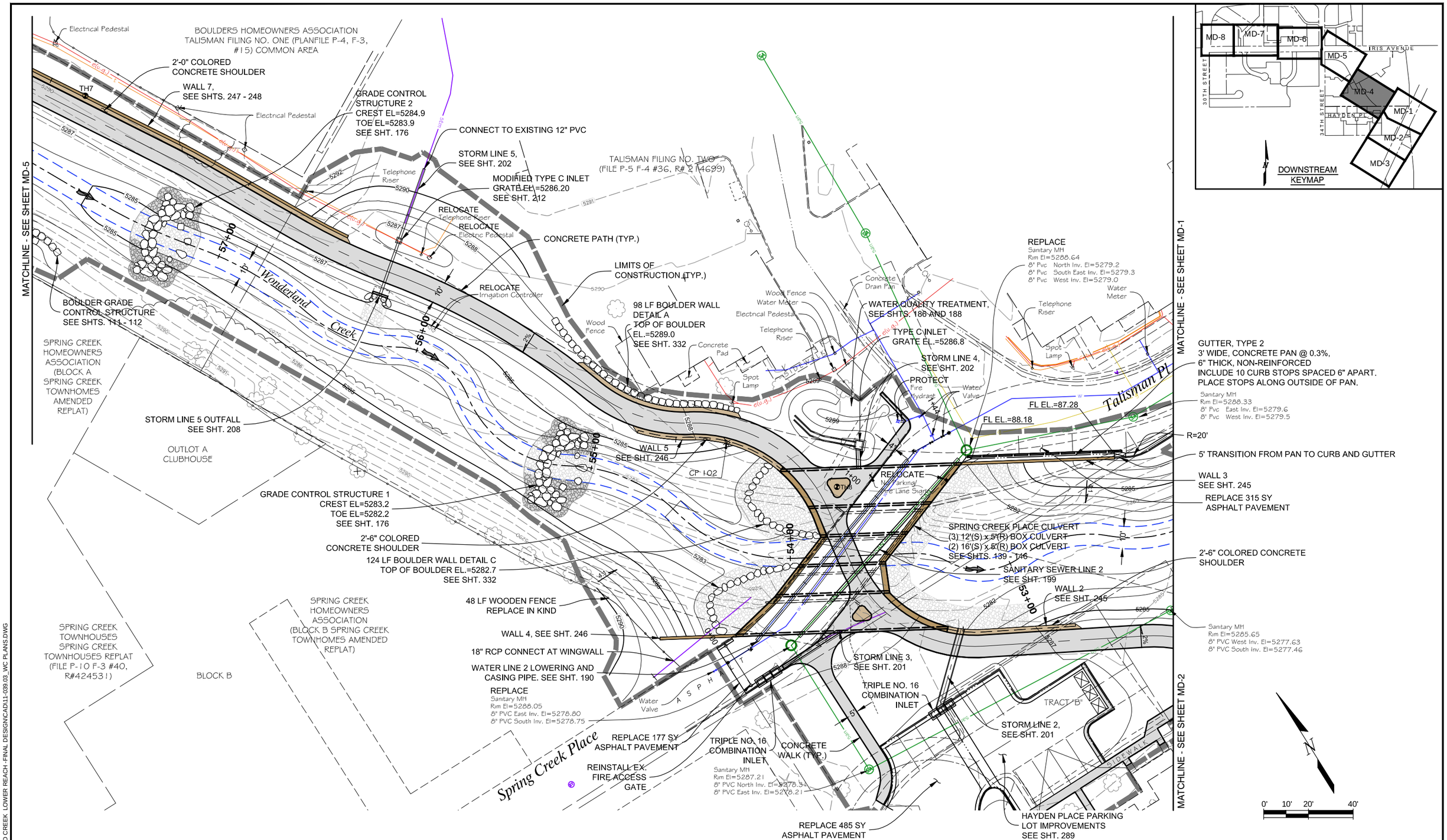

Computer File Information		
Creation Date: 07/18/13	Initials: JHK	
Last Modification Date: 06/18/15	Initials: JHK	
Full Path: P:\11-039.03\CAD		
Drawing File Name: 11-039.03_WC PLANS.dwg		
AutoCAD 2014	Scale: AS SHOWN	FEET

MULLER ENGINEERING CO., INC.
CONSULTING ENGINEERS
777 S. WADSWORTH BLVD. 4-100
LAKEWOOD, COLORADO 80226
(303) 988-4939
MULLER
MEC PROJECT NO. 11039.03

COLORADO REGISTERED CHRISTOPHER L. KADEGER 37254 PROFESSIONAL ENGINEER 6/18/15

Sheet Revisions		
Date:	Comments	Init.

As Constructed
No Revisions:
Revised:
Void:

GREENS DRAINAGE AND FLOOD CONTROL DISTRICT
CDOT CO Region 4 RDM
CITY OF BOULDER

WONDERLAND CREEK - GREENWAYS IMPROVEMENT PROJECT
DRAINAGEWAY IMPROVEMENTS PLAN

Designer:	CLK	Structure Numbers	
Detailer:	JHK		
Sheet Subset:	DRAINAGE	Subset Sheets:	MD-4

Project No./Code
STM 110-081
18405
Sheet Number: 98

PLOTTED: 6/19/2015 10:33:26 AM
NAME: P:\11-039.03 WONDERLAND CREEK LOWER REACH -FINAL DESIGN\CAD\11-039.03_WC PLANS.DWG

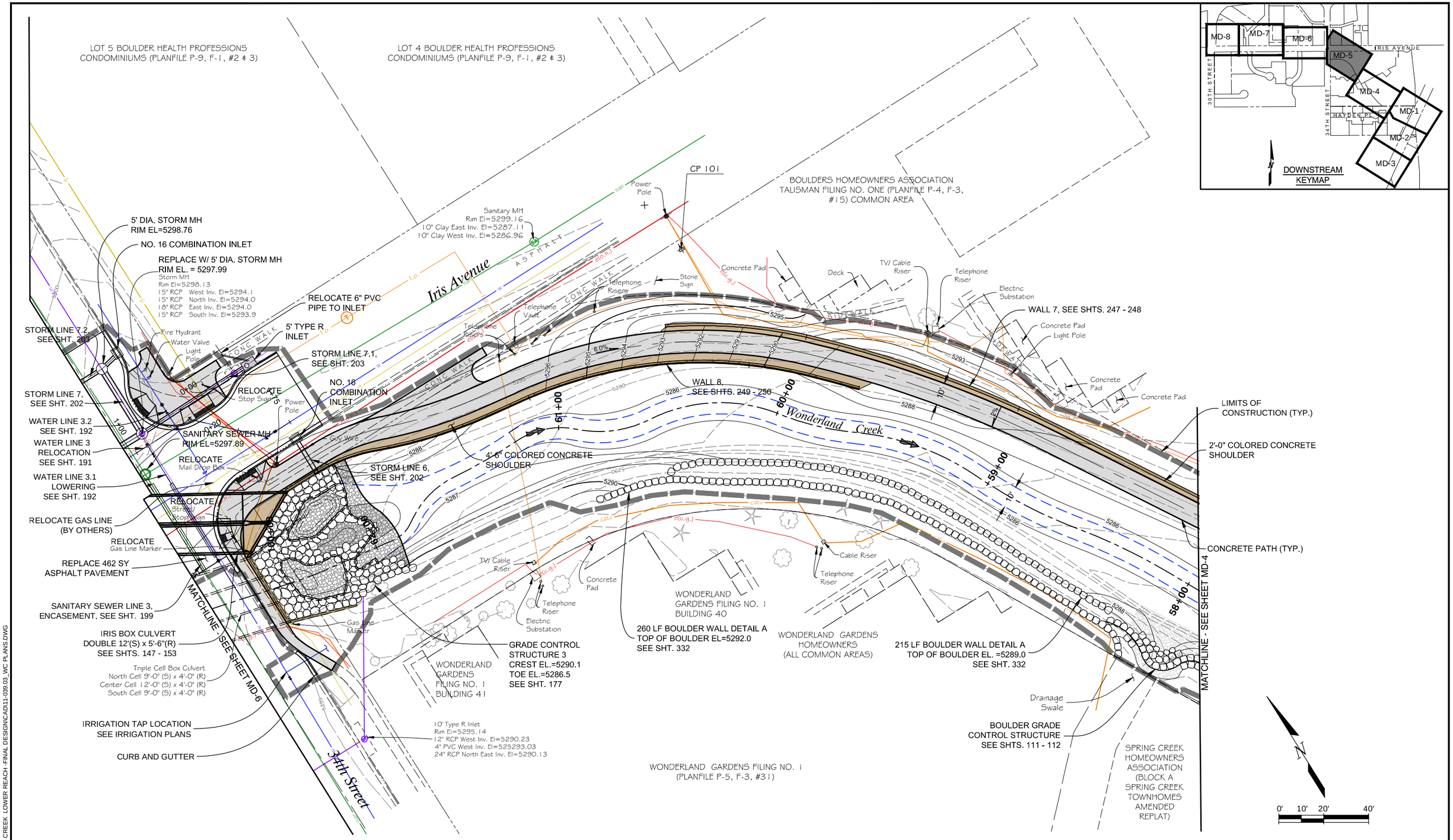

PLOTTED: 6/22/2015 9:07:09 AM
NAME: P:\11-039.03 WONDERLAND CREEK LOWER REACH -FINAL DESIGN\CAD\11-039.03_WC PLANS.DWG

Computer File Information		
Creation Date: 07/18/13	Initials: JHK	
Last Modification Date: 06/18/15	Initials: JHK	
Full Path: P:\11-039.03\CAD		
Drawing File Name: 11-039.03_WC PLANS.dwg		
AutoCAD 2014	Scale: AS NOT SHOWN	FEET

MULLER ENGINEERING CO., INC.
CONSULTING ENGINEERS
777 S. WADSWORTH BLVD. 4-100
LAKEWOOD, COLORADO 80226
(303) 988-4939
MEC PROJECT NO. 11039.03

COLORADO REGISTERED PROFESSIONAL ENGINEER CHRISTOPHER L. KRAGER 37254 6/18/15

Sheet Revisions		
Date:	Comments	Init.

As Constructed
No Revisions:
Revised:
Void:

Region 4 RDM

CITY OF BOULDER

WONDERLAND CREEK - GREENWAYS IMPROVEMENT PROJECT

DRAINAGEWAY IMPROVEMENTS PLAN

Designer:	CLK	Structure Numbers	
Detailer:	JHK		
Sheet Subset: DRAINAGE		Subset Sheets:	MD-5

Project No./Code
STM 110-081
18405
Sheet Number: 99

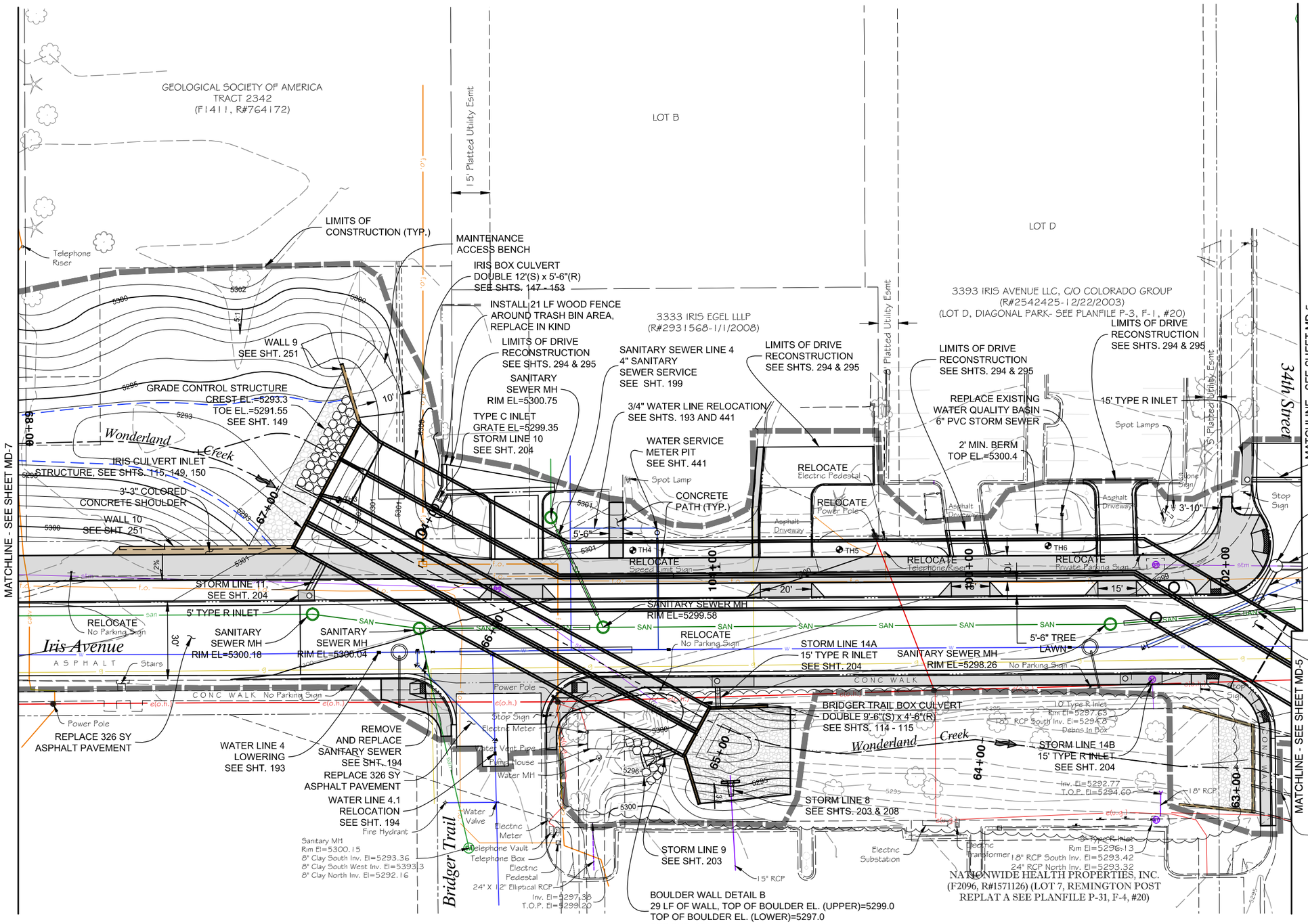

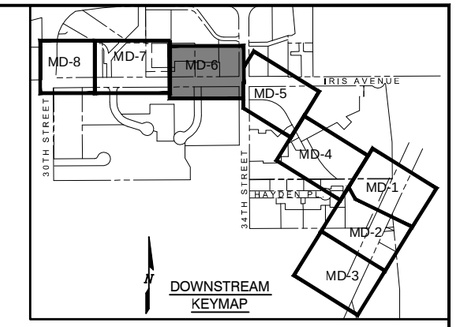

NOTES:

1. SEE SHTS. 290-293 FOR IRIS AVE. AND 34TH STREET ROADWAY IMPROVEMENTS.

Computer File Information		
Creation Date: 07/18/13		Initials: JHK
Last Modification Date: 06/18/15		Initials: JHK
Full Path: P:\11-039.03\CAD		
Drawing File Name: 11-039.03_WC PLANS.dwg		
AutoCAD 2014	Scale: AS SHOWN	FEET

MULLER ENGINEERING CO., INC.
CONSULTING ENGINEERS
777 S. WADSWORTH BLVD. 4-100
LAKEWOOD, COLORADO 80226
(303) 988-4939
MULLER
MEC PROJECT NO. 11039.03

COLORADO REGISTERED PROFESSIONAL ENGINEER CHRISTOPHER L. KRIEGER 37254 6/18/15

Sheet Revisions		
Date:	Comments	Init.

As Constructed
No Revisions:
Revised:
Void:

Region 4 RDM
CITY OF BOULDER

WONDERLAND CREEK - GREENWAYS IMPROVEMENT PROJECT
DRAINAGEWAY IMPROVEMENTS PLAN

Designer:	CLK	Structure Numbers	
Detailer:	JHK		
Sheet Subset:	DRAINAGE	Subset Sheets:	MD-6

Project No./Code
STM 110-081
18405
Sheet Number: 100

PLOTTED: 6/19/2015 10:34:18 AM
NAME: P:\11-039.03 WONDERLAND CREEK LOWER REACH - FINAL DESIGN\CAD\11-039.03_WC PLANS.DWG

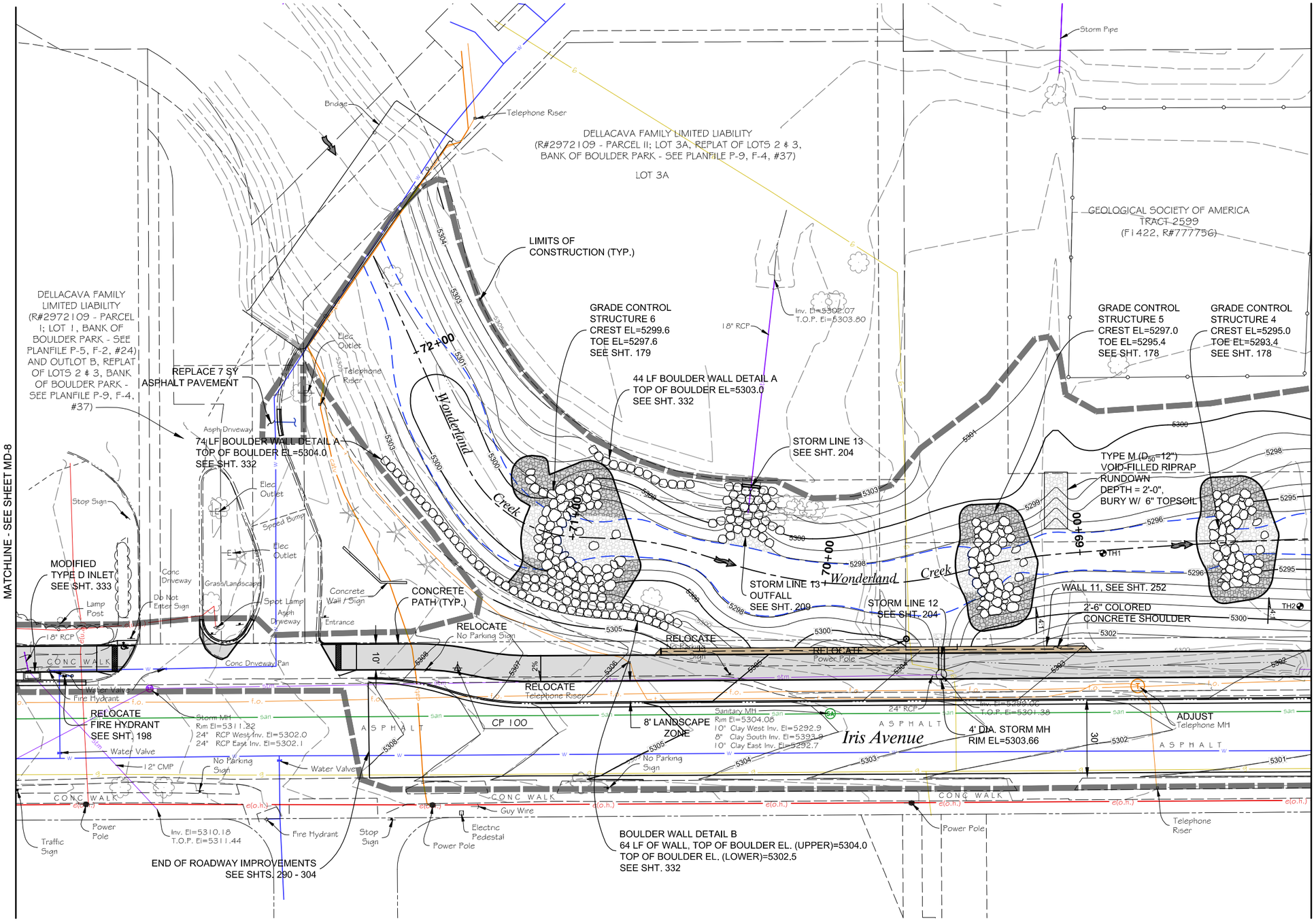

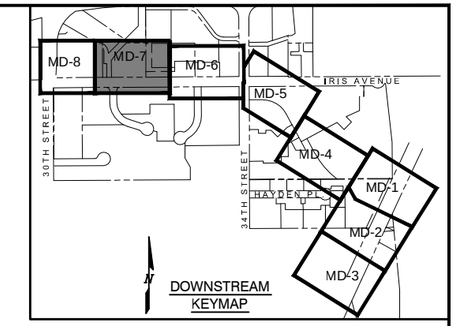

NOTES:

1. SEE SHTS. 290-293 FOR IRIS AVE. AND 34TH STREET ROADWAY IMPROVEMENTS.

Computer File Information		
Creation Date: 07/18/13	Initials: JHK	
Last Modification Date: 06/18/15	Initials: JHK	
Full Path: P:\11-039.03\CAD		
Drawing File Name: 11-039.03_WC PLANS.dwg		
AutoCAD 2014	Scale: AS SHOWN	FEET

MULLER ENGINEERING CO., INC.
CONSULTING ENGINEERS
777 S. WADSWORTH BLVD. 4-100
LAKEWOOD, COLORADO 80226
(303) 988-4939
MULLER
MEC PROJECT NO. 11039.03

COLORADO REGISTERED PROFESSIONAL ENGINEER CHRISTOPHER L. KADGER 37254 6/18/15

Sheet Revisions		
Date:	Comments	Init.

As Constructed
No Revisions:
Revised:
Void:

URBAN DRAINAGE AND FLOOD CONTROL DISTRICT
CO CDOT Region 4 RDM
CITY OF BOULDER

WONDERLAND CREEK - GREENWAYS IMPROVEMENT PROJECT
DRAINAGEWAY IMPROVEMENTS PLAN

Designer:	CLK	Structure Numbers	
Detailer:	JHK		
Sheet Subset:	DRAINAGE	Subset Sheets:	MD-7

Project No./Code
STM 110-081
18405
Sheet Number: 101

PLOTTED: 6/19/2015 10:34:36 AM
NAME: P:\11-039.03 WONDERLAND CREEK LOWER REACH -FINAL DESIGN\CAD\11-039.03_WC PLANS.DWG

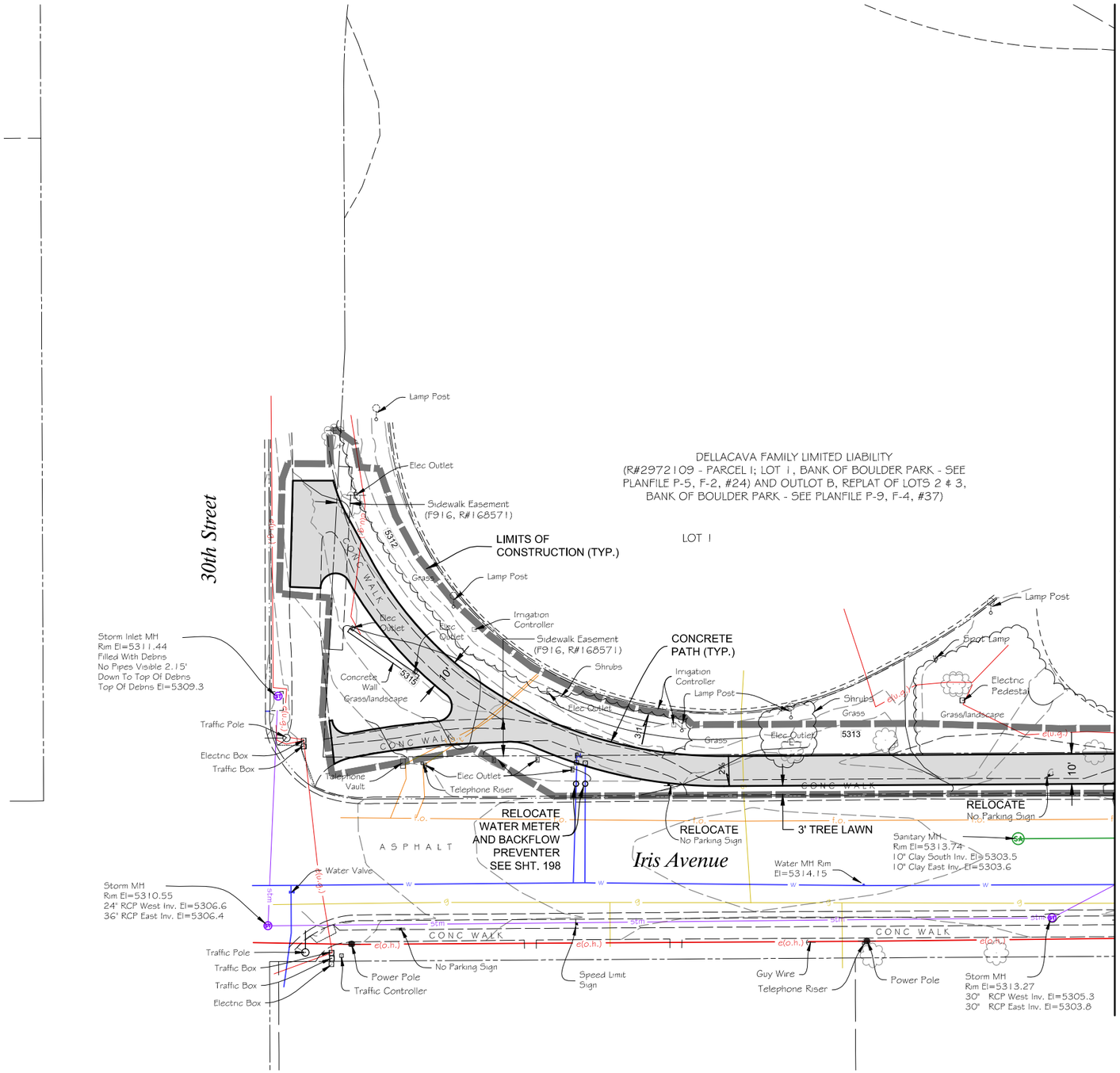

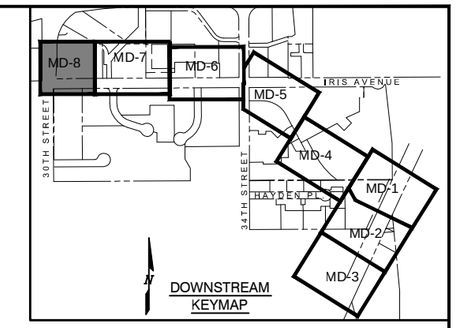

Computer File Information		
Creation Date: 07/18/13	Initials: JHK	
Last Modification Date: 06/18/15	Initials: JHK	
Full Path: P:\11-039.03\CAD		
Drawing File Name: 11-039.03_WC PLANS.dwg		
AutoCAD 2014	Scale: AS SHOWN	FEET

MULLER ENGINEERING CO., INC.
CONSULTING ENGINEERS
777 S. WADSWORTH BLVD. 4-100
LAKEWOOD, COLORADO 80226
(303) 988-4939

MEC PROJECT NO. 11039.03

COLORADO REGISTERED PROFESSIONAL ENGINEER CHRISTOPHER L. KRAMER 37254 6/18/15

Sheet Revisions		
Date:	Comments	Init.

As Constructed
No Revisions:
Revised:
Void:

Region 4 RDM

CITY OF BOULDER

WONDERLAND CREEK - GREENWAYS IMPROVEMENT PROJECT

DRAINAGEWAY IMPROVEMENTS PLAN

Designer:	CLK	Structure Numbers	
Detailer:	JHK		
Sheet Subset:	DRAINAGE	Subset Sheets:	MD-8

Project No./Code
STM 110-081
18405
Sheet Number: 102

PLOTTED: 6/19/2015 10:34:51 AM
NAME: P:\11-039.03 WONDERLAND CREEK LOWER REACH - FINAL DESIGN\CAD\11-039.03_WC PLANS.DWG

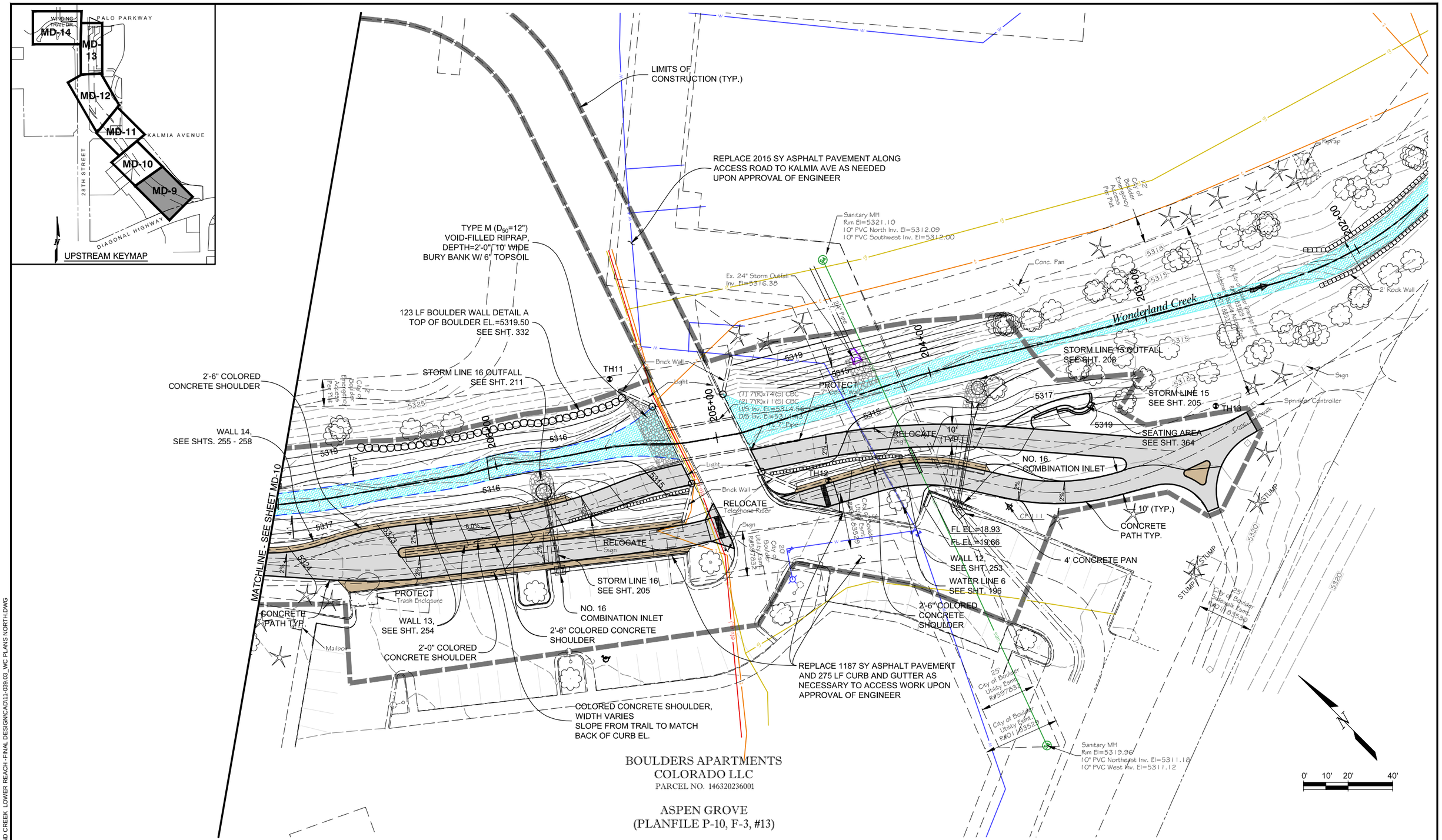

Computer File Information		
Creation Date: 11/10/14	Initials: JHK	
Last Modification Date: 06/18/15	Initials: JHK	
Full Path: P:\11-039.03\CAD		
Drawing File Name: 11-039.03_WC PLANS NORTH.dwg		
AutoCAD 2014	Scale: AS SHOWN	FEET

MULLER ENGINEERING CO., INC.
CONSULTING ENGINEERS
777 S. WADSWORTH BLVD. 4-100
LAKEWOOD, COLORADO 80226
(303) 988-4939

MEC PROJECT NO. 11039.03

COLORADO REGISTERED CHRISTOPHER L. KREGER 37254 6/18/15 PROFESSIONAL ENGINEER

Sheet Revisions		
Date:	Comments	Init.

As Constructed
No Revisions:
Revised:
Void:

GREAT DRAINAGE AND FLOOD CONTROL DISTRICT

CO CDOT Region 4 RDM

CITY OF BOULDER

WONDERLAND CREEK - GREENWAYS IMPROVEMENT PROJECT

DRAINAGEWAY IMPROVEMENTS PLAN

Designer:	CLK	Structure Numbers	
Detailer:	JHK		
Sheet Subset:	DRAINAGE	Subset Sheets:	MD-9

Project No./Code
STM 110-081
18405
Sheet Number: 103

PLOTTED: 6/19/2015 10:35:53 AM
NAME: P:\11-039.03 WONDERLAND CREEK LOWER REACH -FINAL DESIGN\CAD\11-039.03_WC PLANS NORTH.DWG

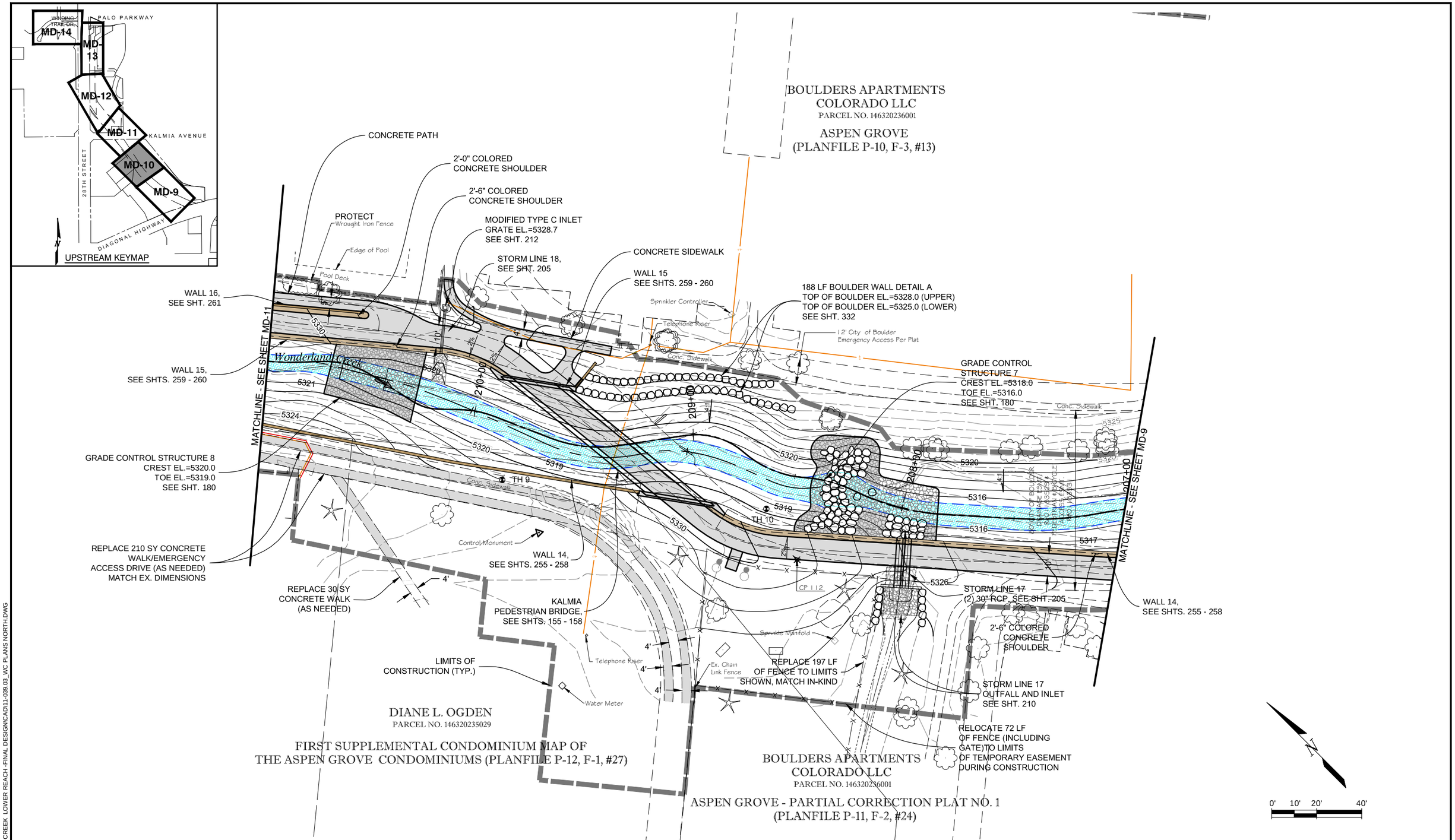

Computer File Information		
Creation Date: 11/10/14	Initials: JHK	
Last Modification Date: 06/18/15	Initials: JHK	
Full Path: P:\11-039.03\CAD		
Drawing File Name: 11-039.03_WC PLANS NORTH.dwg		
AutoCAD 2014	Scale: AS SHOWN	FEET

MULLER ENGINEERING CO., INC.
CONSULTING ENGINEERS
777 S. WADSWORTH BLVD. 4-100
LAKEWOOD, COLORADO 80226
(303) 988-4939
MULLER
MEC PROJECT NO. 11039.03

COLORADO REGISTERED CHRISTOPHER L. KRIEGER 37254 6/18/15 PROFESSIONAL ENGINEER

Sheet Revisions		
Date:	Comments	Init.

As Constructed
No Revisions:
Revised:
Void:

Region 4 RDM
CITY OF BOULDER

WONDERLAND CREEK - GREENWAYS IMPROVEMENT PROJECT
DRAINAGEWAY IMPROVEMENTS PLAN

Designer:	CLK	Structure Numbers	
Detailer:	JHK		
Sheet Subset:	DRAINAGE	Subset Sheets:	MD-10

Project No./Code
STM 110-081
18405
Sheet Number: 104

PLOTTED: 6/19/2015 10:36:07 AM
NAME: P:\11-039.03 WONDERLAND CREEK LOWER REACH - FINAL DESIGN\CAD\11-039.03_WC PLANS NORTH.DWG

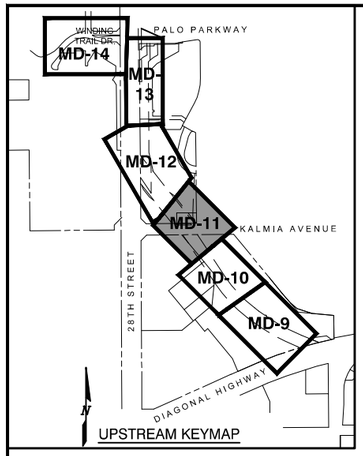

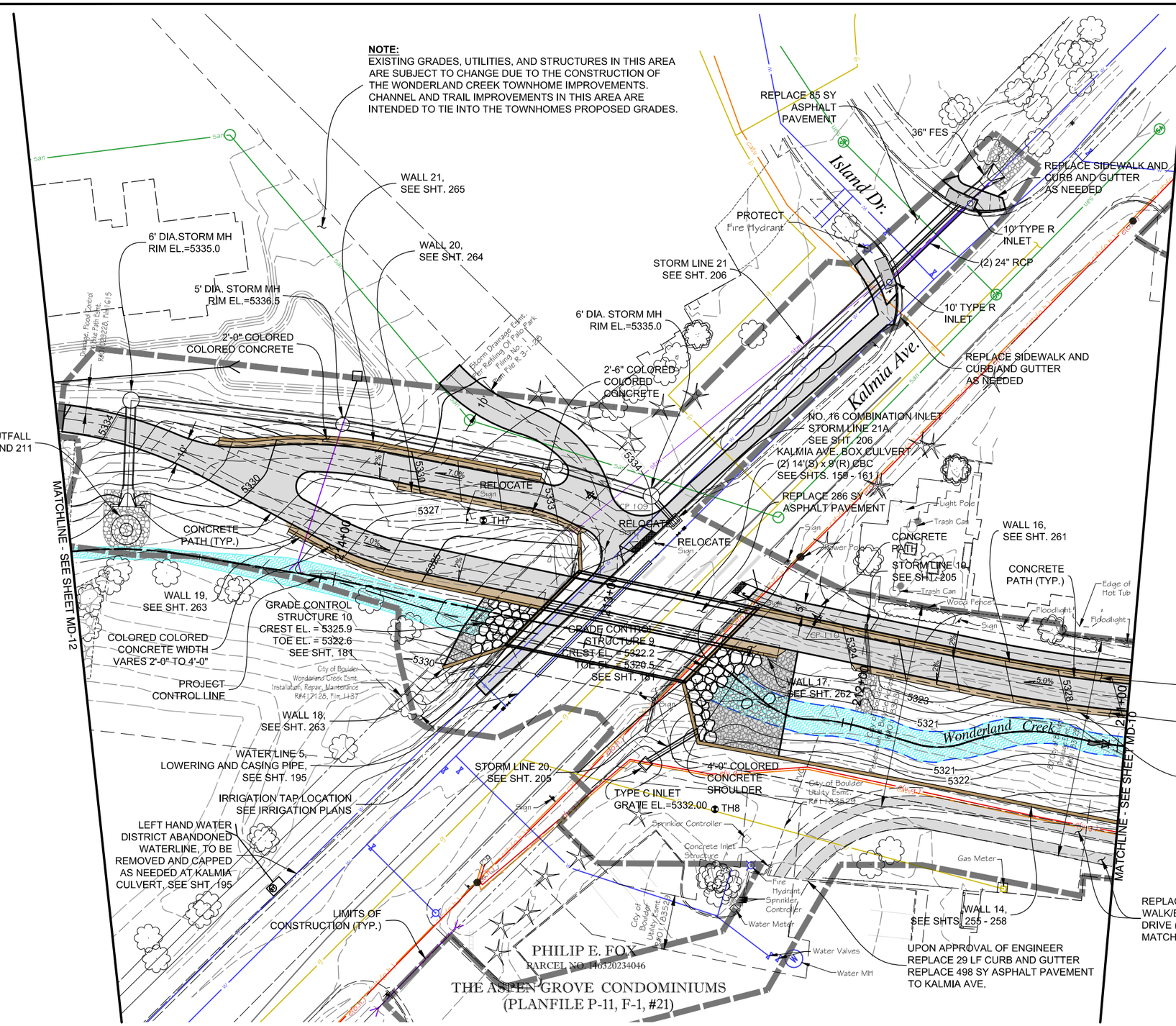

Computer File Information		
Creation Date: 11/10/14	Initials: JHK	
Last Modification Date: 06/18/15	Initials: JHK	
Full Path: P:\11-039.03\CAD		
Drawing File Name: 11-039.03_WC PLANS NORTH.dwg		
AutoCAD 2014	Scale: AS SHOWN	FEET

MULLER ENGINEERING CO., INC.
CONSULTING ENGINEERS
777 S. WADSWORTH BLVD. 4-100
LAKEWOOD, COLORADO 80226
(303) 988-4939
MULLER
MEC PROJECT NO. 11039.03

COLORADO REGISTERED PROFESSIONAL ENGINEER CHRISTOPHER L. KREGER 37254 6/18/15

Sheet Revisions		
Date:	Comments	Init.

As Constructed
No Revisions:
Revised:
Void:

Region 4 RDM

CITY OF BOULDER

WONDERLAND CREEK - GREENWAYS IMPROVEMENT PROJECT

DRAINAGEWAY IMPROVEMENTS PLAN

Designer:	CLK	Structure Numbers	
Detailer:	JHK		
Sheet Subset: DRAINAGE		Subset Sheets:	MD-11

Project No./Code
STM 110-081
18405
Sheet Number: 105

PLOTTED: 6/19/2015 10:36:22 AM
NAME: P:\11-039.03 WONDERLAND CREEK LOWER REACH -FINAL DESIGN\CAD\11-039.03_WC PLANS NORTH.DWG

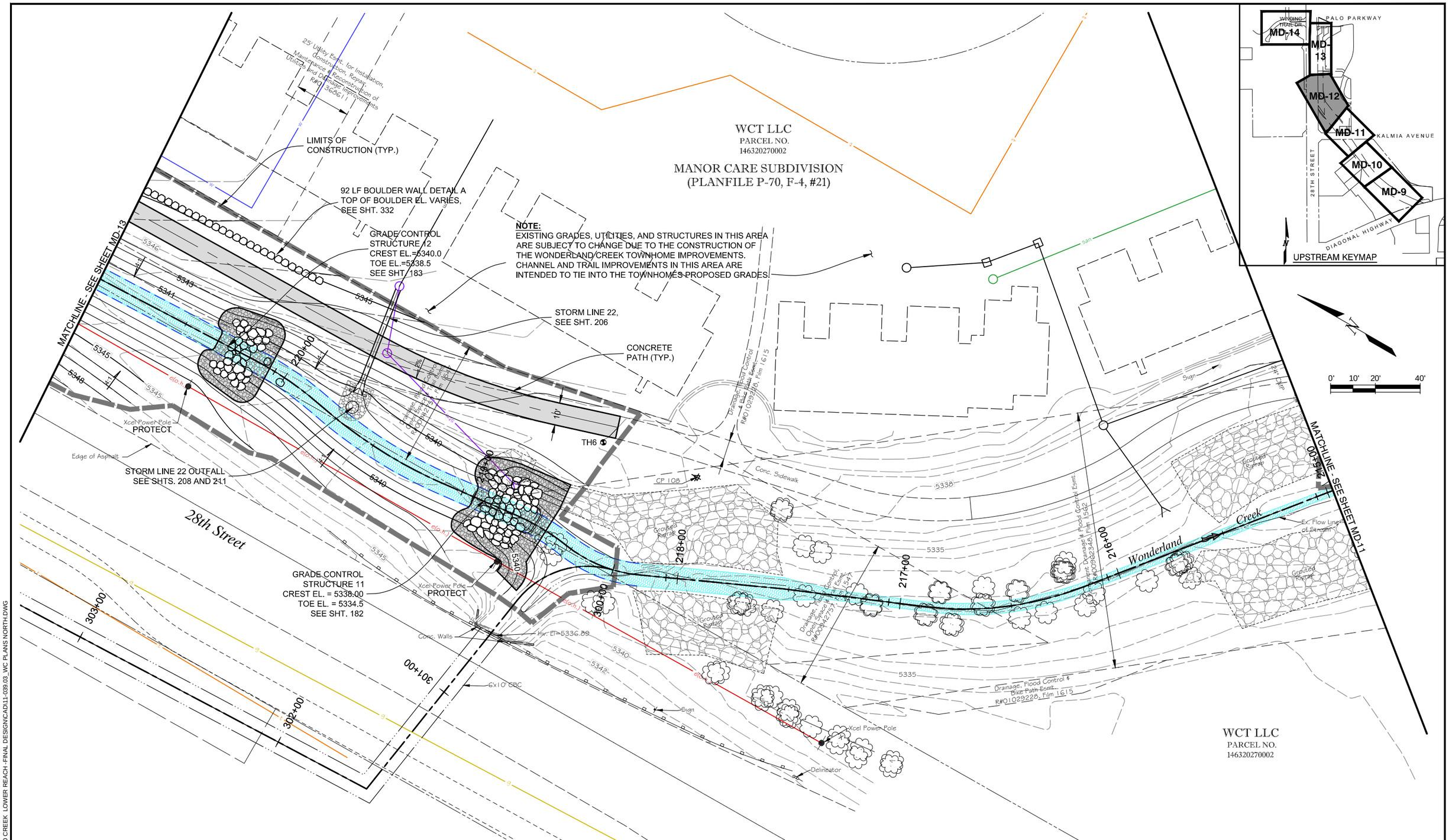

Computer File Information		
Creation Date: 11/10/14	Initials: JHK	
Last Modification Date: 06/18/15	Initials: JHK	
Full Path: P:\11-039.03\CAD		
Drawing File Name: 11-039.03_WC PLANS NORTH.dwg		
AutoCAD 2014	Scale: AS SHOWN	FEET

MULLER ENGINEERING CO., INC.
CONSULTING ENGINEERS
777 S. WADSWORTH BLVD. 4-100
LAKEWOOD, COLORADO 80226
(303) 988-4939
MULLER
MEC PROJECT NO. 11039.03

COLORADO REGISTERED PROFESSIONAL ENGINEER
CHRISTOPHER L. KREGENOW
37254
6/18/15

Sheet Revisions		
Date:	Comments	Init.

As Constructed
No Revisions:
Revised:
Void:

DRAINAGE AND FLOOD CONTROL DISTRICT
CDOT CO Region 4 RDM
CITY OF BOULDER

WONDERLAND CREEK - GREENWAYS IMPROVEMENT PROJECT
DRAINAGEWAY IMPROVEMENTS PLAN

Designer:	CLK	Structure Numbers	
Detailer:	JHK		
Sheet Subset:	DRAINAGE	Subset Sheets:	MD-12

Project No./Code
STM 110-081
18405
Sheet Number: 106

PLOTTED: 6/19/2015 10:36:36 AM
NAME: P:\11-039.03 WONDERLAND CREEK LOWER REACH -FINAL DESIGN\CAD\11-039.03_WC PLANS NORTH.DWG

MANOR CARE
NURSING CENTER
OF BOULDER 398
PARCEL NO. 146320270001

MANOR CARE SUBDIVISION
(PLANFILE P-70, F-4, #21)

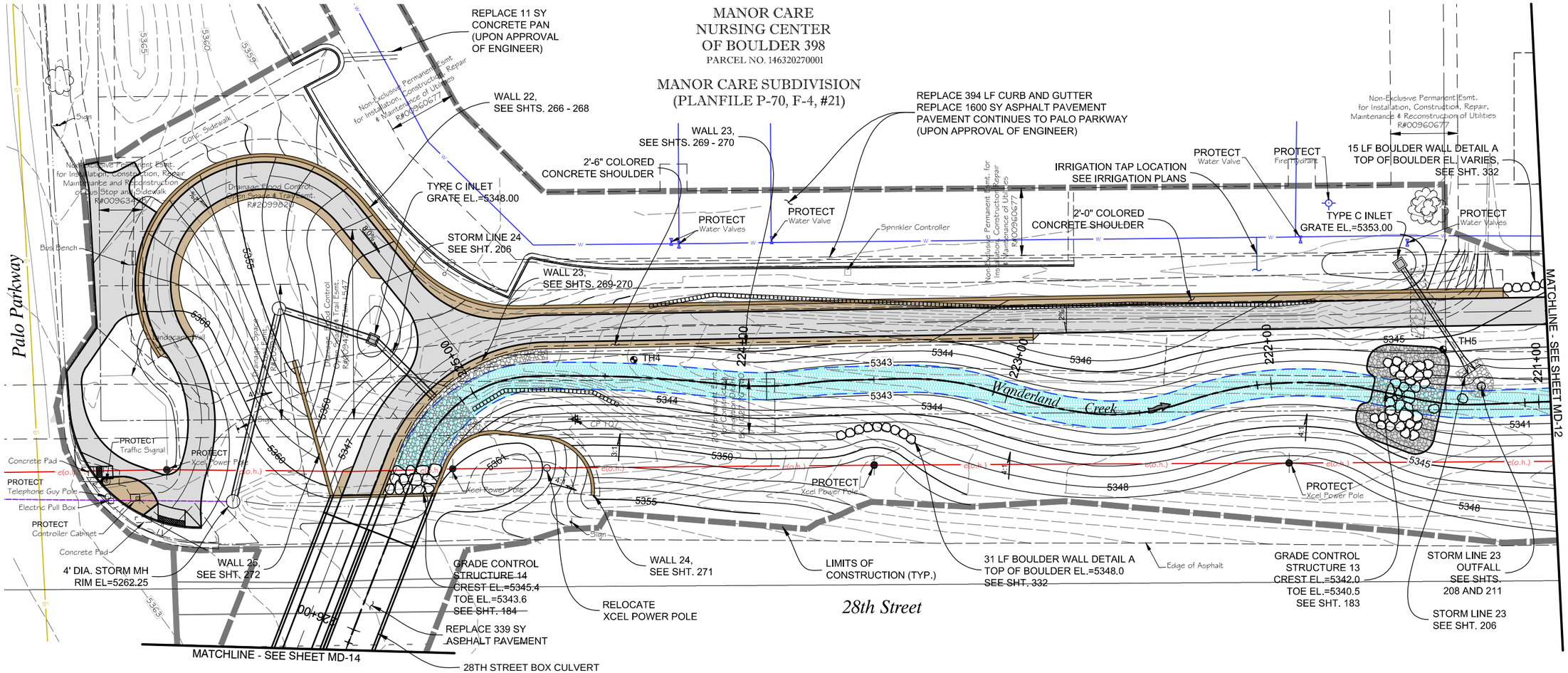

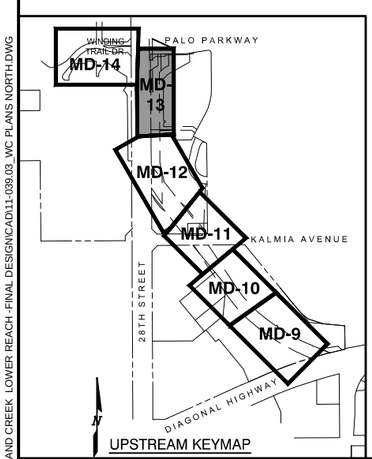

Computer File Information		
Creation Date: 11/10/14	Initials: JHK	
Last Modification Date: 06/18/15	Initials: JHK	
Full Path: P:\11-039.03\CAD		
Drawing File Name: 11-039.03_WC PLANS NORTH.dwg		
AutoCAD 2014	Scale: AS SHOWN	FEET

MULLER ENGINEERING CO., INC.
CONSULTING ENGINEERS
777 S. WADSWORTH BLVD. 4-100
LAKEWOOD, COLORADO 80226
(303) 988-4939
MULLER
MEC PROJECT NO. 11039.03

COLORADO REGISTERED PROFESSIONAL ENGINEER CHRISTOPHER L. KREGER 37254 6/18/15

Sheet Revisions		
Date:	Comments	Init.

As Constructed
No Revisions:
Revised:
Void:

Region 4 RDM

CITY OF BOULDER

WONDERLAND CREEK - GREENWAYS IMPROVEMENT PROJECT
DRAINAGEWAY IMPROVEMENTS PLAN

Designer:	CLK	Structure Numbers	
Detailer:	JHK		
Sheet Subset: DRAINAGE		Subset Sheets:	MD-13

Project No./Code
STM 110-081
18405
Sheet Number: 107

PLOTTED: 6/19/2015 10:36:49 AM
NAME: P:\11-039.03 WONDERLAND CREEK LOWER REACH -FINAL DESIGN\CAD\11-039.03_WC PLANS NORTH.DWG

WALL 34, SEE SHT. 281
TYPE M (D_{50}=12") VOID-FILLED RIPRAP, DEPTH=2'-0", 10' WIDE (TYP.)
GRADE CONTROL STRUCTURE 17 CREST EL.=5352.65 TOE EL.= 5350.75 SEE SHT. 185
WALL 36, SEE SHT. 281
WALL 35, SEE SHT. 281
CONCRETE PATH (TYP.)
WALL 33, SEE SHT. 280
REPLACE 712 SY ASPHALT PAVEMENT
STORM LINE 29, SEE SHT. 207
WATER LINE 7 SEE SHT. 197
REPLACE 48 LF OF CURB AND GUTTER
WINDING TRAIL CULVERT TRIPLE 15'(S) x 5'(R) CBC SEE SHTS. 173 - 175
WINDING TRAIL WATER QUALITY TREATMENT 2, SEE SHT. 187
STORM LINE 28 SEE SHT. 207
OUTLOT T
HOMEOWNERS ASSOCIATION OWNED AND MAINTAINED, BLANKET UTILITY EASEMENT, PEDESTRIAN AND BIKE ACCESS, RECREATION CENTER, FLOODWAY CHANNEL EASEMENT, VEHICULAR ACCESS EASEMENT AS SHOWN ON PLAT FOR MAINTENANCE OF SS MANHOLE 38, STORM DRAINAGE RETENTION POND AREA - PER PLAT OF WINDING TRAIL VILLAGE PLAN FILE P-11, F-1 #26-28, RECEPTION NO. 442447
WINDING TRAIL WATER QUALITY TREATMENT 1, SEE SHT. 186
WALL 31, SEE SHT. 279
WALL 32, SEE SHT. 280
CONCRETE PATH (TYP.)
2'-0" COLORED CONCRETE SHOULDER
OUTLOT L
HOMEOWNERS ASSOCIATION OWNED AND MAINTAINED, BLANKET UTILITY EASEMENT, PEDESTRIAN AND BIKE ACCESS, FLOODWAY CHANNEL EASEMENT, STORM DRAINAGE RETENTION POND AREA - PER PLAT OF WINDING TRAIL VILLAGE PLAN FILE P-11, F-1 #26-28, RECEPTION NO. 442447
WINDING TRAIL VILLAGE HOMEOWNERS ASSOCIATION
OUTLOT L WINDING TRAIL VILLAGE REPLAT VALUE DISTRIBUTED PER 38-33.3- 105, C.R.S. PARCEL NO. 146320227110
Sanitary MH Rim El=5354.08 8" PVC North Inv. El=5341.69 8" PVC West Inv. El=5341.66 8" PVC East Inv. El=5341.57 8" PVC South Inv. El=5341.49
REPLACE 8 SY ASPHALT PAVEMENT
WINDING TRAIL PEDESTRIAN CROSSING 2'(R) x 16'(S) CBC, SEE SHTS. 169 - 172
TYPE C INLET GRATE EL.=5354.50
WALL 30, SEE SHT. 278
STORM LINE 26 SEE SHT. 207
2'-6" COLORED CONCRETE SHOULDER
IRRIGATION TAP LOCATION SEE IRRIGATION PLANS
CURB AND GUTTER
5' CONCRETE PAN
RAISE SANITARY SEWER MH RIM TO 5359.50 TO MATCH TRAIL
REPLACE 340 LF CURB AND GUTTER
Sanitary MH Rim El=5358.95 8" PVC North Inv. El=5348.07 8" PVC West Inv. El=5348.04 8" PVC South Inv. El=5347.93
SANITARY SEWER LINE 5 SEE SHT. 200
5' DIA. STORM MH RIM EL.=5361.07
5' DIA. STORM MH RIM EL.=5362.66
OUTLOT M
Winding Trail Drive
Type C Inlet Grate El=5364.02 18" RCP South Inv. El=5359.93
Type C Inlet Grate El=5356.26 12" RCP South Inv. El=5351.11
STORM LINE 25 SEE SHT. 207
5' DIA. STORM MH RIM EL.=5363.21
WALL 27, SEE SHTS. 274 - 275
LIMITS OF CONSTRUCTION (TYP.)
CONCRETE PATH (TYP.)
2'-6" COLORED CONCRETE SHOULDER
GRADE CONTROL STRUCTURE 16 CREST EL.=5349.7 TOE EL.= 5347.5 SEE SHT. 185
WALL 28, SEE SHT. 276
COLORED CONCRETE SHOULDER
REPLACE 239 SY ASPHALT PAVEMENT
28TH STREET BOX CULVERT (2) 10'(R) x 16'(S) CBC PEDESTRIAN UNDERPASS FILL NORTH CELL WITH 1-FOOT CONCRETE
NORTH CELL: U/S INV. EL. = 5347.0 D/S INV. EL. = 5346.4
SOUTH CELL: U/S INV. EL. = 5346.0 D/S INV. EL. = 5345.4
SEE SHTS. 162-168
GRADE CONTROL STRUCTURE 15 CREST EL.=5346.7 TOE EL.=5346.0 SEE SHT. 184
APPROXIMATE LIMITS OF CONCRETE SLAB REPLACEMENT. MATCH EX. SLAB THICKNESS OR 6" MIN. INSTALL 1'-6" DEEP CUTOFF WALL AT FRONT OF SLAB.
WALL 29, SEE SHT. 277
Storm Sewer MH Rim El=5356.60 Invert In (N) Box Culvert El=5340.59 Invert Out (S) Box Culvert El=5340.38
WALL 26, SEE SHT. 273
LOWER GAS LINE FOR UNDERPASS (OTHERS)
MATCHLINE - SEE SHEET MD-13
28th Street
Wonderland Creek
WINDING TRAIL VILLAGE (PLANFILE P-11, F-1, #26-29)

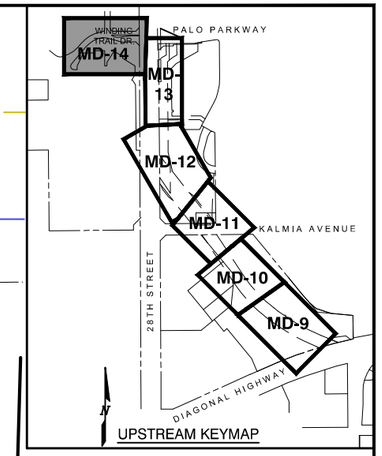

Computer File Information		
Creation Date: 11/10/14	Initials: JHK	
Last Modification Date: 06/18/15	Initials: JHK	
Full Path: P:\11-039.03\CAD		
Drawing File Name: 11-039.03_WC PLANS NORTH.dwg		
AutoCAD 2014	Scale: AS SHOWN	FEET

MULLER ENGINEERING CO., INC.
CONSULTING ENGINEERS
777 S. WADSWORTH BLVD. 4-100
LAKEWOOD, COLORADO 80226
(303) 988-4939
MULLER
MEC PROJECT NO. 11039.03

COLORADO REGISTERED PROFESSIONAL ENGINEER CHRISTOPHER L. KRIEGER 37254 6/18/15

Sheet Revisions		
Date:	Comments	Init.

As Constructed
No Revisions:
Revised:
Void:

Region 4 RDM
CITY OF BOULDER

WONDERLAND CREEK - GREENWAYS IMPROVEMENT PROJECT
DRAINAGEWAY IMPROVEMENTS PLAN

Designer:	CLK	Structure Numbers	
Detailer:	JHK		
Sheet Subset:	DRAINAGE	Subset Sheets:	MD-14

Project No./Code: STM 110-081
18405
Sheet Number: 108

PLOTTED: 6/19/2015 10:37:06 AM
NAME: P:\11-039.03 WONDERLAND CREEK LOWER REACH - FINAL DESIGN\CAD\11-039.03_WC PLANS NORTH.DWG

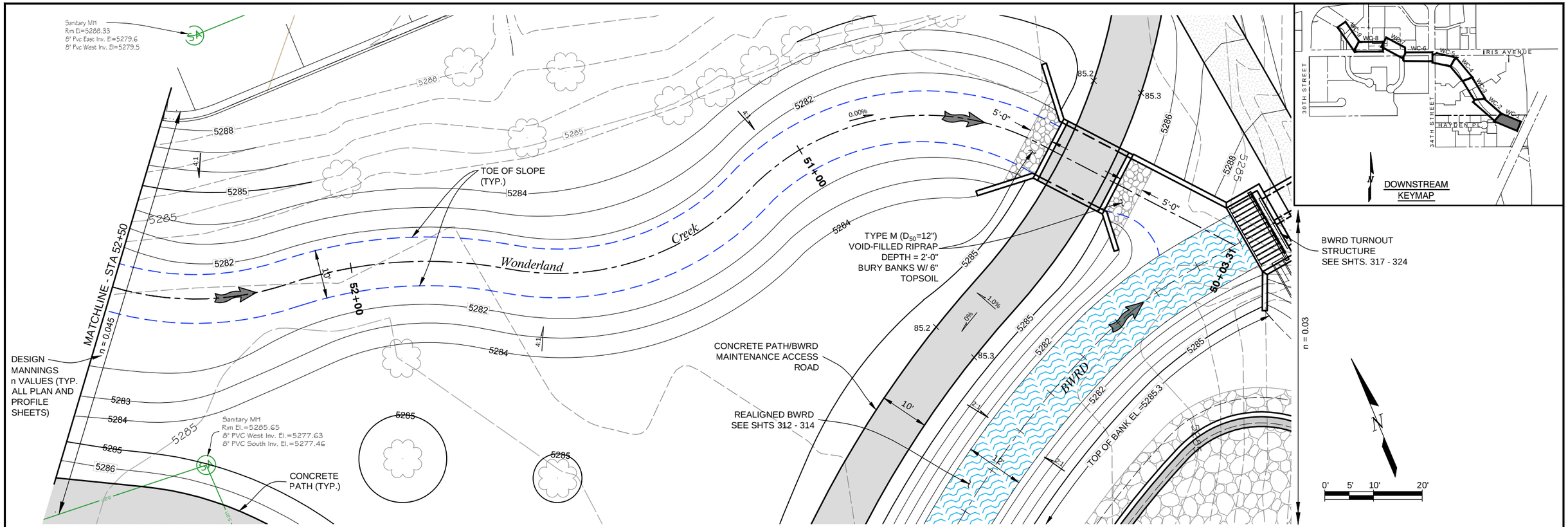

NOTE:
UTILITIES TO BE REMOVED ARE SHOWN IN PROFILE VIEW ONLY. NOT PLAN VIEW. SEE DEMOLITION AND REMOVAL PLANS FOR PLAN VIEWS.

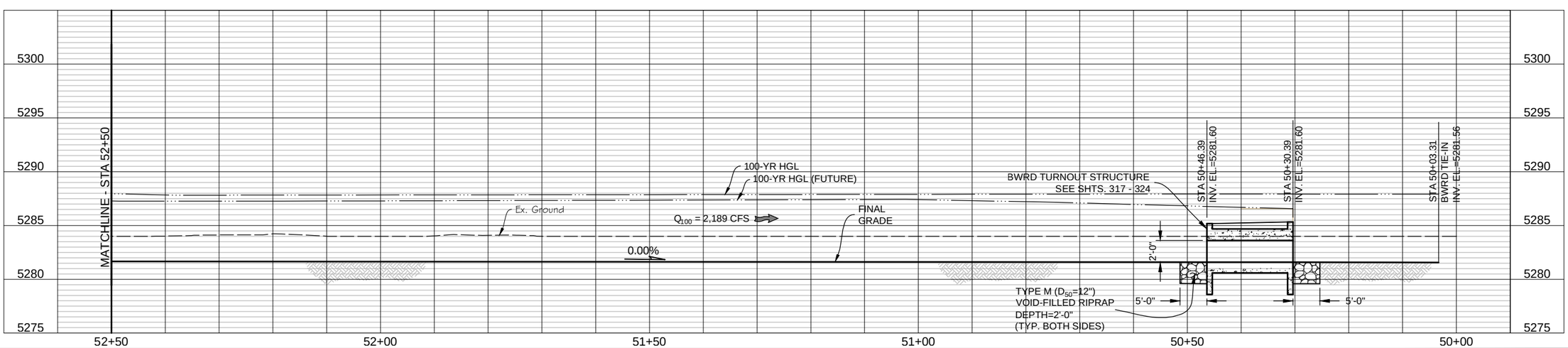

Computer File Information		
Creation Date: 08/19/14	Initials: JHK	
Last Modification Date: 06/18/15	Initials: JHK	
Full Path: P:\11-039.03\CAD		
Drawing File Name: 11-039.03_WC P&P.dwg		
AutoCAD 2014	Scale: AS SHOWN	

MULLER ENGINEERING CO., INC.
CONSULTING ENGINEERS
777 S. WADSWORTH BLVD. 4-100
LAKEWOOD, COLORADO 80226
(303) 988-4939
MULLER
MEC PROJECT NO. 11039.03

COLORADO REGISTERED PROFESSIONAL ENGINEER CHRISTOPHER L. KRIEGER 37254 6/18/15

Sheet Revisions		
Date:	Comments	Init.

As Constructed
No Revisions:
Revised:
Void:

UDFCD
CDOT Region 4 RDM
CITY OF BOULDER

WONDERLAND CREEK - GREENWAYS IMPROVEMENT PROJECT
WONDERLAND CREEK PLAN AND PROFILE

Designer:	CLK	Structure Numbers	
Detailer:	JHK		
Sheet Subset:	DRAINAGE	Subset Sheets:	WC-1

Project No./Code
STM 110-081
18405
Sheet Number: 109

PLOTTED: 6/19/2015 10:38:20 AM
NAME: P:\11-039.03 WONDERLAND CREEK LOWER REACH -FINAL DESIGN\CAD\11-039.03_WC P&P.DWG

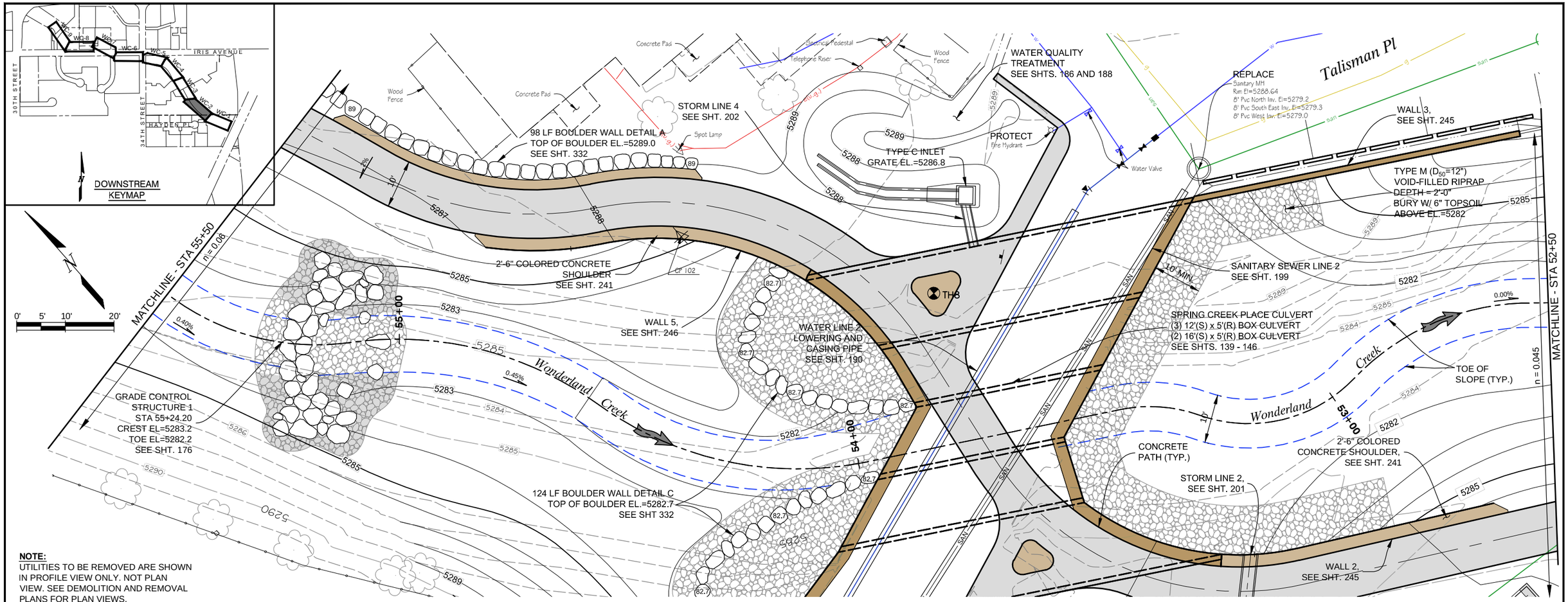

NOTE:
UTILITIES TO BE REMOVED ARE SHOWN IN PROFILE VIEW ONLY. NOT PLAN VIEW. SEE DEMOLITION AND REMOVAL PLANS FOR PLAN VIEWS.

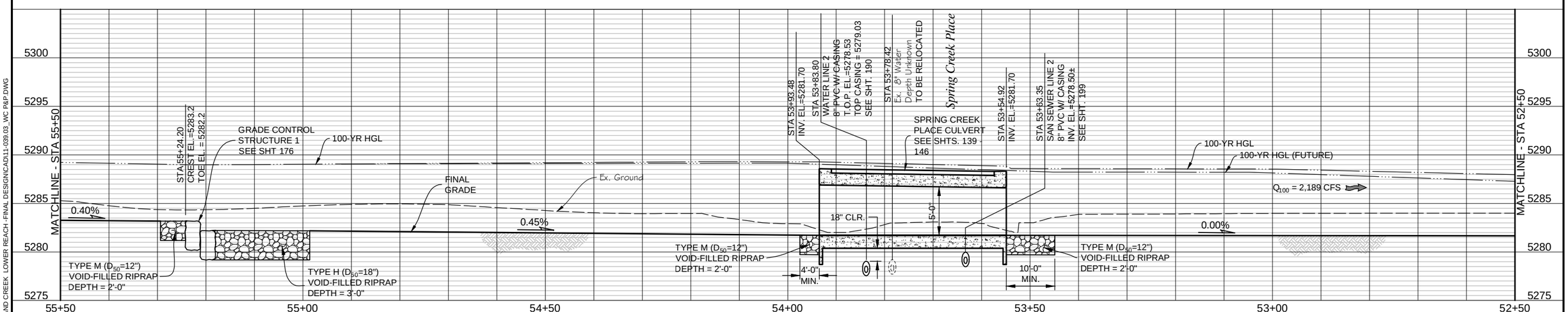

Computer File Information		
Creation Date: 08/19/14	Initials: JHK	
Last Modification Date: 06/18/15	Initials: JHK	
Full Path: P:\11-039.03\CAD		
Drawing File Name: 11-039.03_WC P&P.dwg		
AutoCAD 2014	Scale: AS SHOWN	FEET

MULLER ENGINEERING CO., INC.
CONSULTING ENGINEERS
777 S. WADSWORTH BLVD. 4-100
LAKEWOOD, COLORADO 80226
(303) 988-4939
MULLER
MEC PROJECT NO. 11039.03

COLORADO REGISTERED PROFESSIONAL ENGINEER CHRISTOPHER L. KREGER 37254 6/18/15

Sheet Revisions		
Date:	Comments	Init.

As Constructed
No Revisions:
Revised:
Void:

GREATER DRAINAGE AND FLOOD CONTROL DISTRICT
CO CDOT Region 4 RDM
CITY OF BOULDER

WONDERLAND CREEK - GREENWAYS IMPROVEMENT PROJECT
WONDERLAND CREEK PLAN AND PROFILE

Designer:	CLK	Structure Numbers	
Detailer:	JHK		
Sheet Subset:	DRAINAGE	Subset Sheets:	WC-2

Project No./Code
STM 110-081
18405
Sheet Number: 110

PLOTTED: 6/19/2015 10:38:41 AM
NAME: P:\11-039.03 WONDERLAND CREEK LOWER REACH -FINAL DESIGN\CAD\11-039.03_WC P&P.DWG

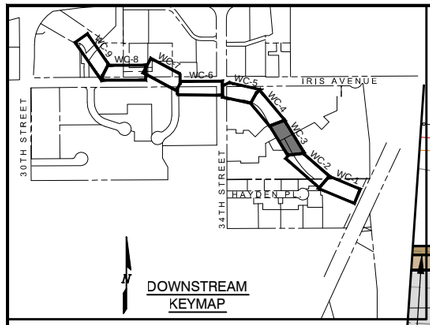

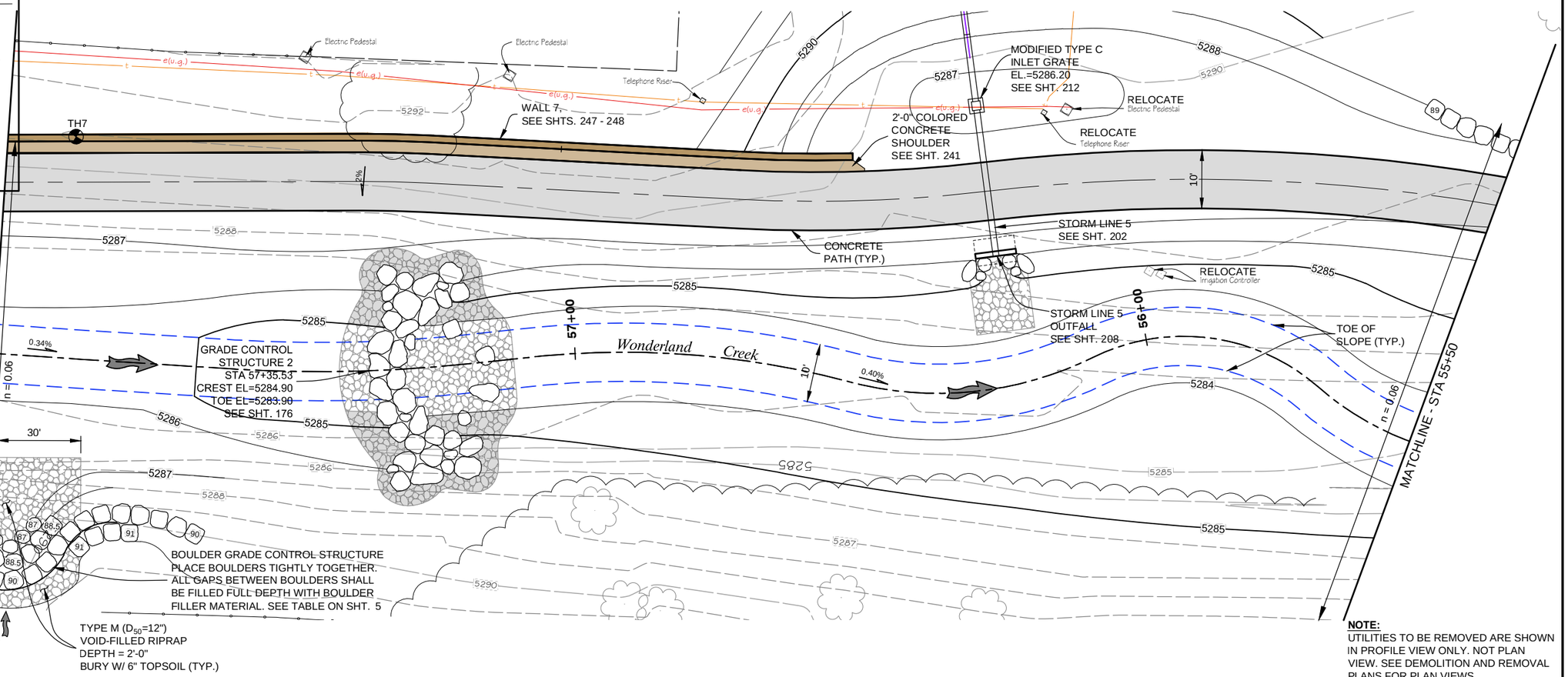

NOTE:
UTILITIES TO BE REMOVED ARE SHOWN IN PROFILE VIEW ONLY. NOT PLAN VIEW. SEE DEMOLITION AND REMOVAL PLANS FOR PLAN VIEWS.

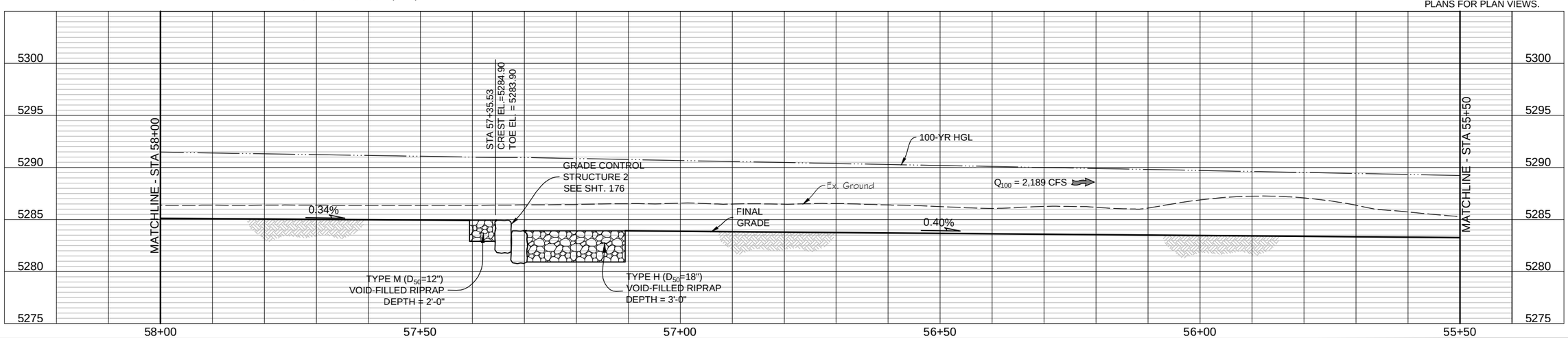

Computer File Information			
Creation Date: 08/19/14	Initials: JHK		
Last Modification Date: 06/18/15	Initials: JHK		
Full Path: P:\11-039.03\CAD			
Drawing File Name: 11-039.03_WC P&P.dwg			
AutoCAD 2014	Scale: AS SHOWN	FEET	

MULLER ENGINEERING CO., INC.
CONSULTING ENGINEERS
777 S. WADSWORTH BLVD. 4-100
LAKEWOOD, COLORADO 80226
(303) 988-4939
MULLER
MEC PROJECT NO. 11039.03

COLORADO REGISTERED PROFESSIONAL ENGINEER CHRISTOPHER L. KREBER 37254 6/18/15

Sheet Revisions		
Date:	Comments	Init.

As Constructed
No Revisions:
Revised:
Void:

Region 4 RDM

CITY OF BOULDER

WONDERLAND CREEK - GREENWAYS IMPROVEMENT PROJECT

WONDERLAND CREEK PLAN AND PROFILE

Designer:	CLK	Structure Numbers	
Detailer:	JHK		
Sheet Subset: DRAINAGE		Subset Sheets:	WC-3

Project No./Code
STM 110-081
18405
Sheet Number: 111

PLOTTED: 6/19/2015 10:38:58 AM
NAME: P:\11-039.03 WONDERLAND CREEK LOWER REACH -FINAL DESIGN\CAD\11-039.03_WC P&P.DWG

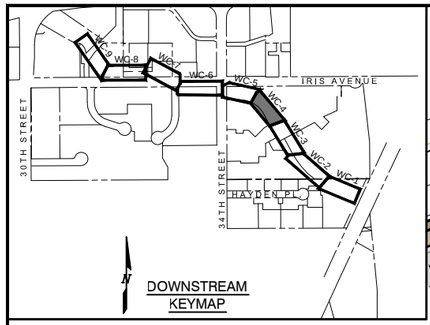

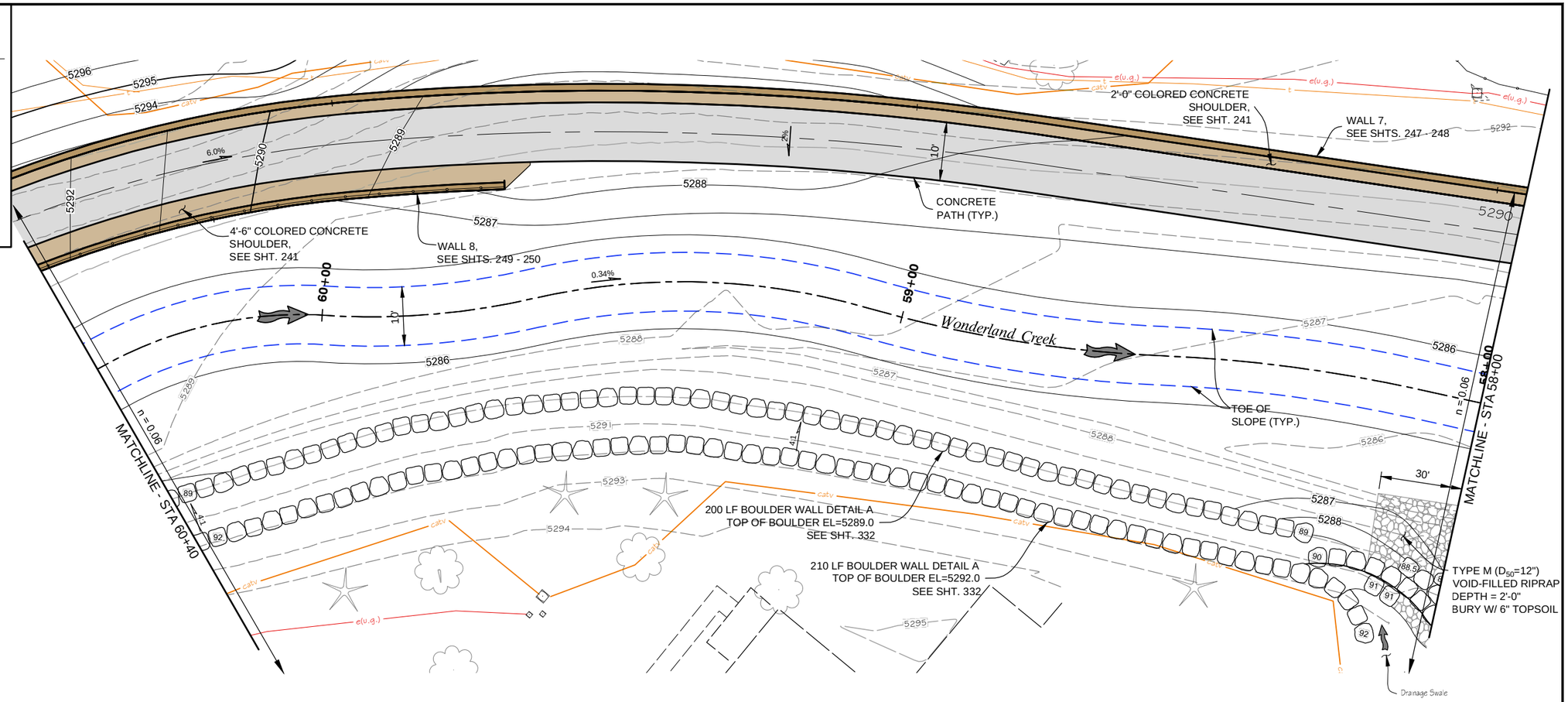

NOTE:
UTILITIES TO BE REMOVED ARE SHOWN IN PROFILE VIEW ONLY. NOT PLAN VIEW. SEE DEMOLITION AND REMOVAL PLANS FOR PLAN VIEWS.

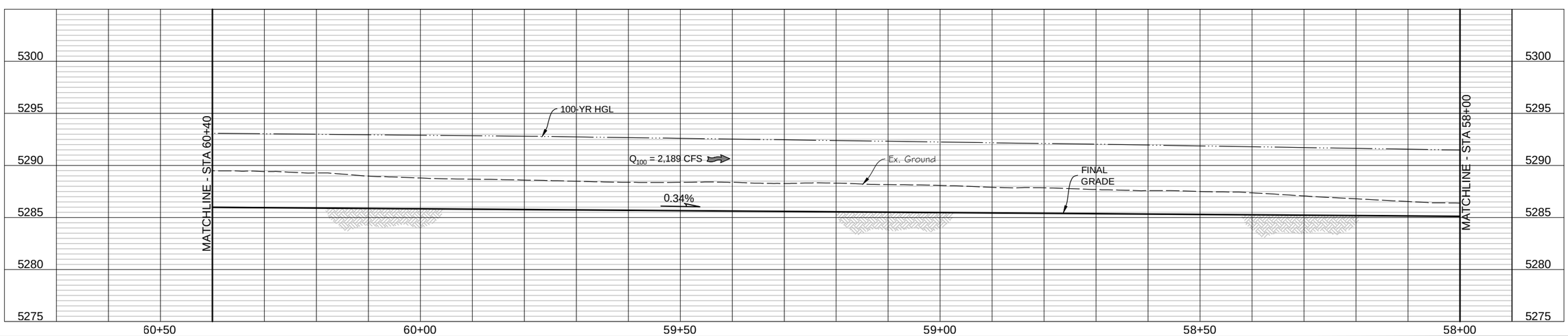

Computer File Information			
Creation Date: 08/19/14	Initials: JHK		
Last Modification Date: 06/18/15	Initials: JHK		
Full Path: P:\11-039.03\CAD			
Drawing File Name: 11-039.03_WC P&P.dwg			
AutoCAD 2014	Scale: AS SHOWN	FEET	

MULLER ENGINEERING CO., INC.
CONSULTING ENGINEERS
777 S. WADSWORTH BLVD. 4-100
LAKEWOOD, COLORADO 80226
(303) 988-4939
MULLER
MEC PROJECT NO. 11039.03

COLORADO REGISTERED PROFESSIONAL ENGINEER CHRISTOPHER L. KRIEGER 37254 6/18/15

Sheet Revisions		
Date:	Comments	Init.

As Constructed
No Revisions:
Revised:
Void:

Region 4 RDM

CITY OF BOULDER

WONDERLAND CREEK - GREENWAYS IMPROVEMENT PROJECT

WONDERLAND CREEK PLAN AND PROFILE

Designer:	CLK	Structure Numbers	
Detailer:	JHK		
Sheet Subset: DRAINAGE		Subset Sheets:	WC-4

Project No./Code
STM 110-081
18405
Sheet Number: 112

PLOTTED: 6/19/2015 10:39:16 AM
NAME: P:\11-039.03 WONDERLAND CREEK LOWER REACH -FINAL DESIGN\CAD\11-039.03_WC P&P.DWG

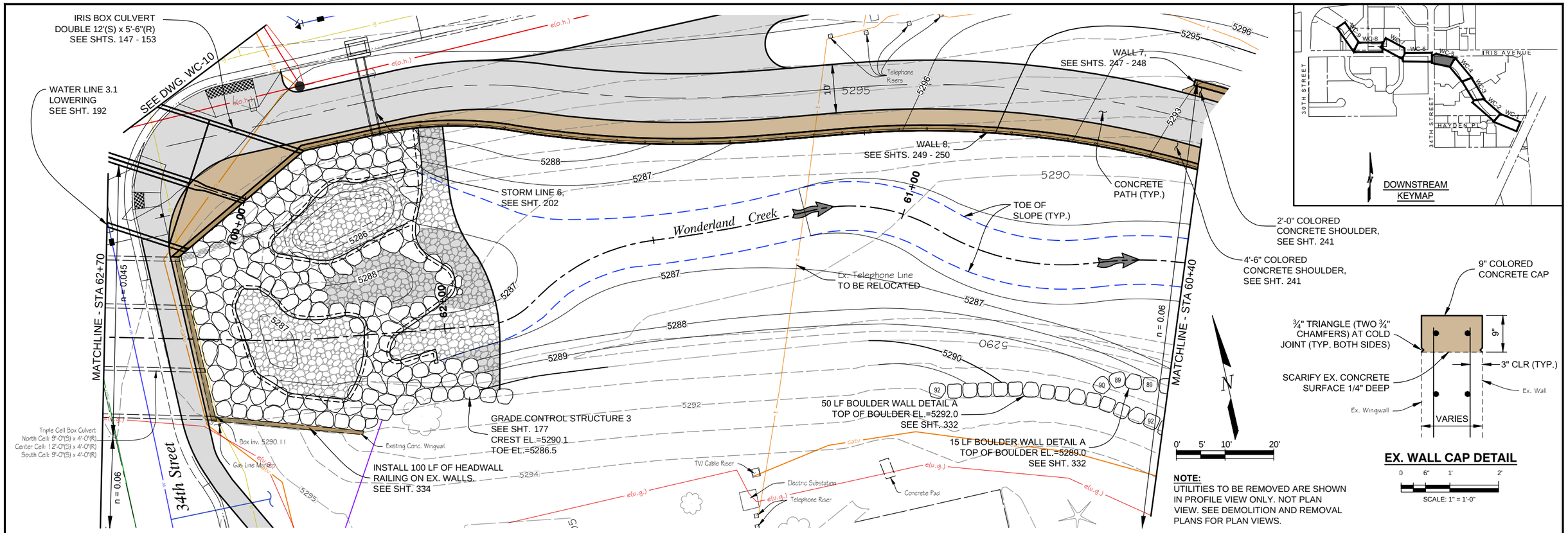

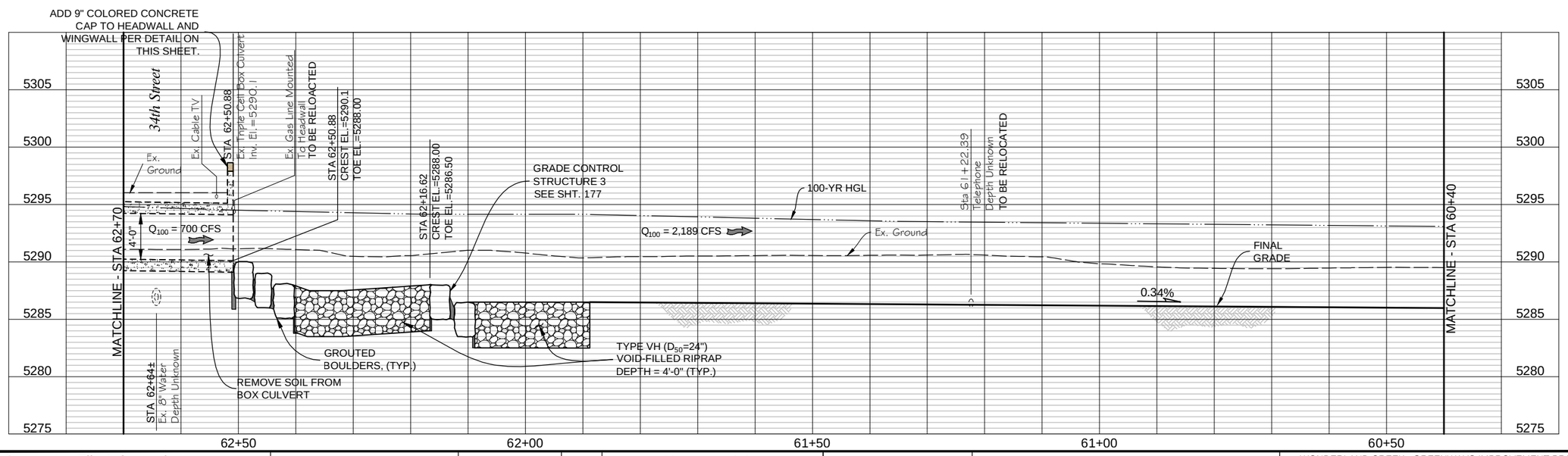

Computer File Information		
Creation Date: 08/19/14	Initials: JHK	
Last Modification Date: 06/18/15	Initials: JHK	
Full Path: P:\11-039.03\CAD		
Drawing File Name: 11-039.03_WC P&P.dwg		
AutoCAD 2014	Scale: AS SHOWN	FEET

MULLER ENGINEERING CO., INC.
CONSULTING ENGINEERS
777 S. WADSWORTH BLVD. 4-100
LAKEWOOD, COLORADO 80226
(303) 988-4939
MULLER
MEC PROJECT NO. 11039.03

COLORADO REGISTERED PROFESSIONAL ENGINEER CHRISTOPHER L. KRAGER 37254 6/18/15

Sheet Revisions		
Date:	Comments	Init.

As Constructed
No Revisions:
Revised:
Void:

Region 4 RDM
CITY OF BOULDER

WONDERLAND CREEK - GREENWAYS IMPROVEMENT PROJECT
WONDERLAND CREEK PLAN AND PROFILE

Designer:	CLK	Structure Numbers	
Detailer:	JHK		
Sheet Subset:	DRAINAGE	Subset Sheets:	WC-5

Project No./Code
STM 110-081
18405
Sheet Number: 113

PLOTTED: 6/19/2015 10:39:31 AM
NAME: P:\11-039.03 WONDERLAND CREEK LOWER REACH -FINAL DESIGN\CAD\11-039.03_WC P&P.DWG

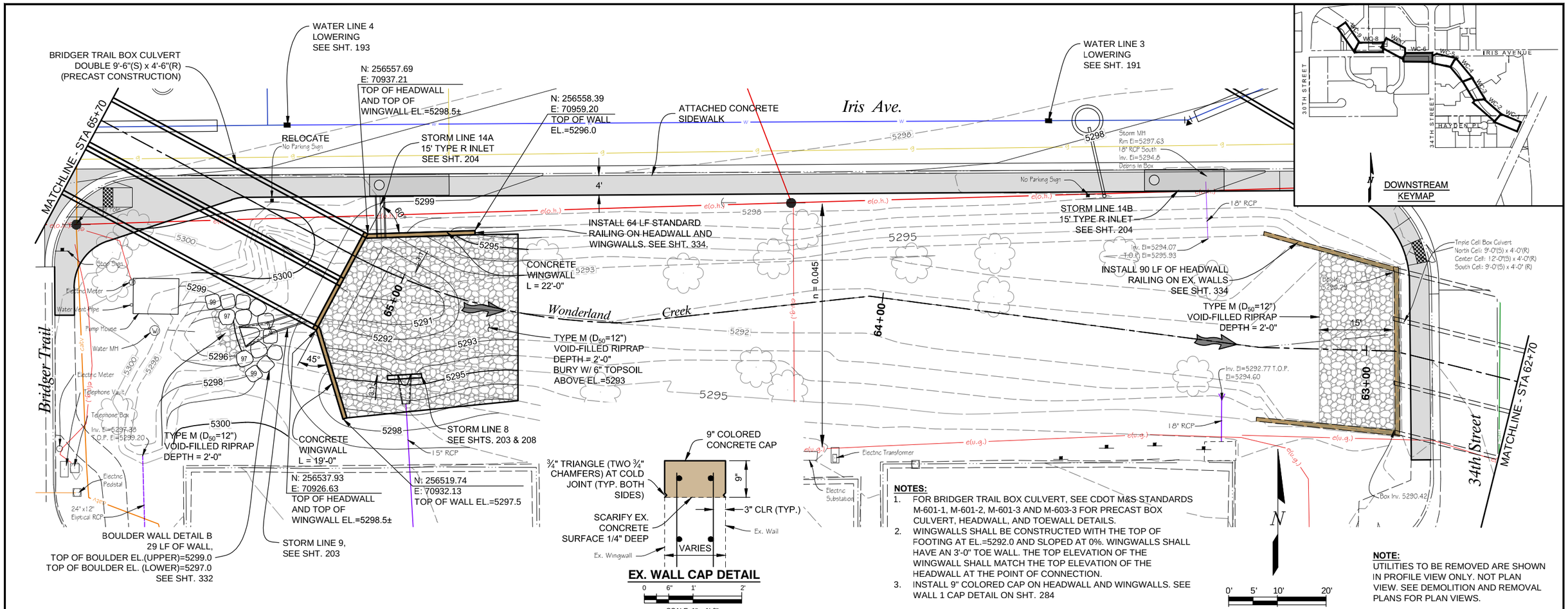

NOTES:

1. FOR BRIDGER TRAIL BOX CULVERT, SEE CDOT M&S STANDARDS M-601-1, M-601-2, M-601-3 AND M-603-3 FOR PRECAST BOX CULVERT, HEADWALL, AND TOEWALL DETAILS.
2. WINGWALLS SHALL BE CONSTRUCTED WITH THE TOP OF FOOTING AT EL.=5292.0 AND SLOPED AT 0%. WINGWALLS SHALL HAVE AN 3'-0" TOE WALL. THE TOP ELEVATION OF THE WINGWALL SHALL MATCH THE TOP ELEVATION OF THE HEADWALL AT THE POINT OF CONNECTION.
3. INSTALL 9" COLORED CAP ON HEADWALL AND WINGWALLS. SEE WALL 1 CAP DETAIL ON SHT. 284

NOTE:
UTILITIES TO BE REMOVED ARE SHOWN IN PROFILE VIEW ONLY. NOT PLAN VIEW. SEE DEMOLITION AND REMOVAL PLANS FOR PLAN VIEWS.

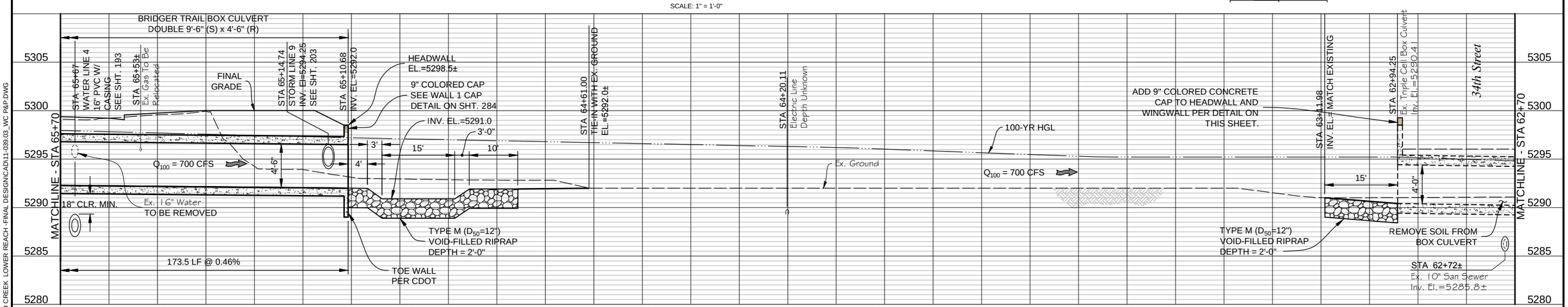

Computer File Information		
Creation Date: 08/19/14	Initials: JHK	
Last Modification Date: 06/18/15	Initials: JHK	
Full Path: P:\11-039.03\CAD		
Drawing File Name: 11-039.03_WC P&P.dwg		
AutoCAD 2014	Scale: AS SHOWN	FEET

MULLER ENGINEERING CO., INC.
CONSULTING ENGINEERS
777 S. WADSWORTH BLVD. 4-100
LAKEWOOD, COLORADO 80226
(303) 988-4939
MULLER
MEC PROJECT NO. 11039.03

COLORADO REGISTERED PROFESSIONAL ENGINEER CHRISTOPHER L. KRIEGER 37254 6/18/15

Sheet Revisions		
Date:	Comments	Init.

As Constructed
No Revisions:
Revised:
Void:

GREEN ARROWS AND FLOOD CONTROL DISTRICT

CDOT CO Region 4 RDM

CITY OF BOULDER

WONDERLAND CREEK - GREENWAYS IMPROVEMENT PROJECT

WONDERLAND CREEK PLAN AND PROFILE

Designer:	CLK	Structure Numbers	
Detailer:	JHK		
Sheet Subset:	DRAINAGE	Subset Sheets:	WC-6

Project No./Code
STM 110-081
18405
Sheet Number: 114

PLOTTED: 6/19/2015 10:39:48 AM
NAME: P:\11-039.03 WONDERLAND CREEK LOWER REACH -FINAL DESIGN\CAD\11-039.03_WC P&P.DWG

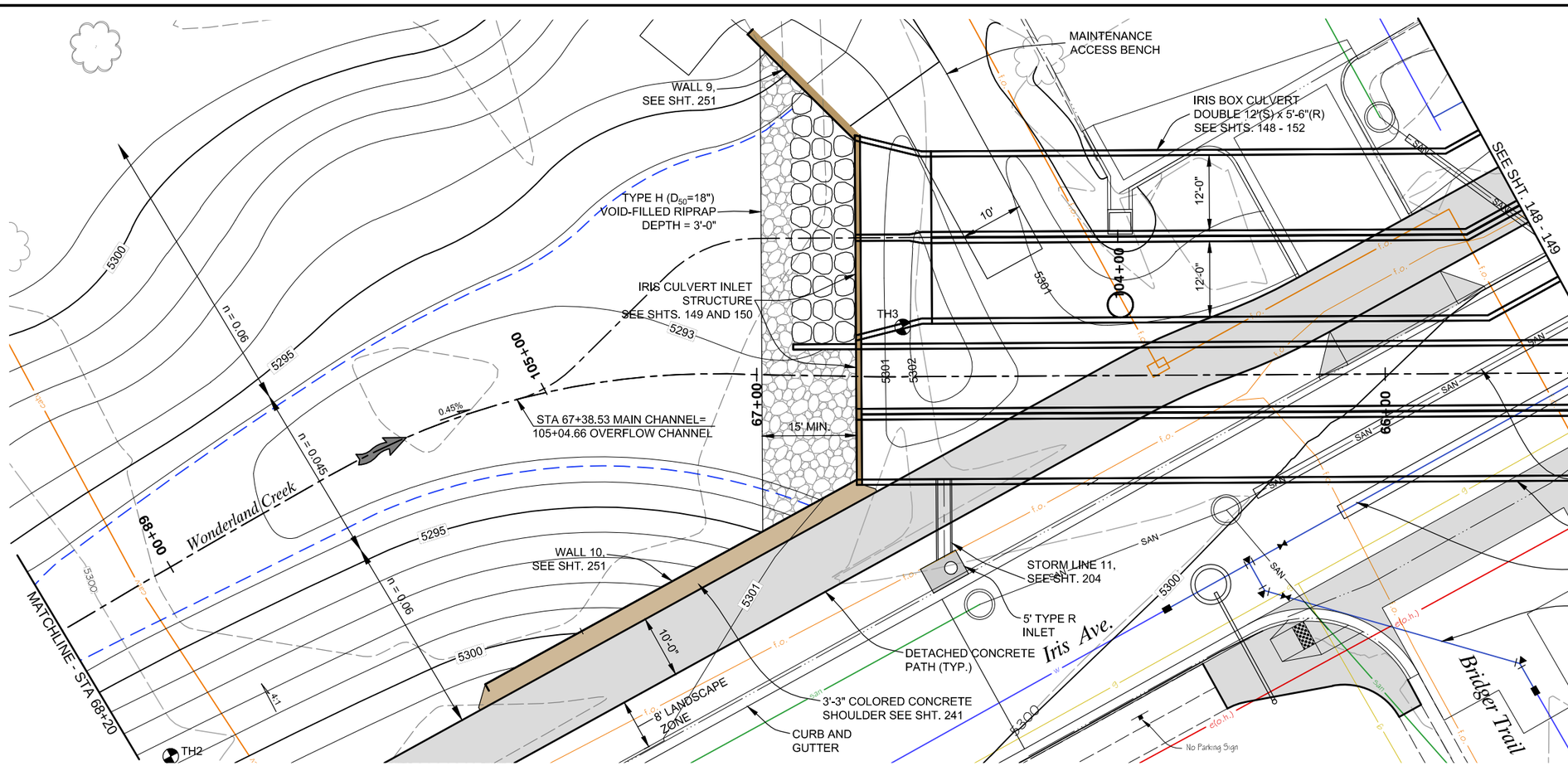

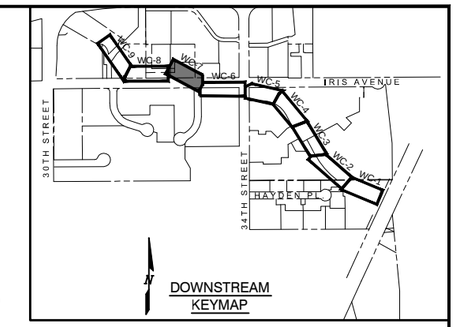

NOTE:
UTILITIES TO BE REMOVED ARE SHOWN IN PROFILE VIEW ONLY. NOT PLAN VIEW. SEE DEMOLITION AND REMOVAL PLANS FOR PLAN VIEWS.

0' 5' 10' 20'

NOTES:

1. FOR BRIDGER TRAIL BOX CULVERT, SEE CDOT M&S STANDARDS M-601-1, M-601-2, M-601-3 AND M-603-3 FOR PRECAST BOX CULVERT, HEADWALL, AND TOEWALL DETAILS.
2. WINGWALLS SHALL BE CONSTRUCTED WITH THE TOP OF FOOTING AT EL.=5292.0 AND SLOPED AT 0%. THE TOP ELEVATION OF THE WINGWALL SHALL MATCH THE TOP ELEVATION OF THE HEADWALL AT THE POINT OF CONNECTION.
3. INSTALL 9" COLORED CAP ON HEADWALL. SEE WALL 1 CAP DETAIL ON SHT. 284

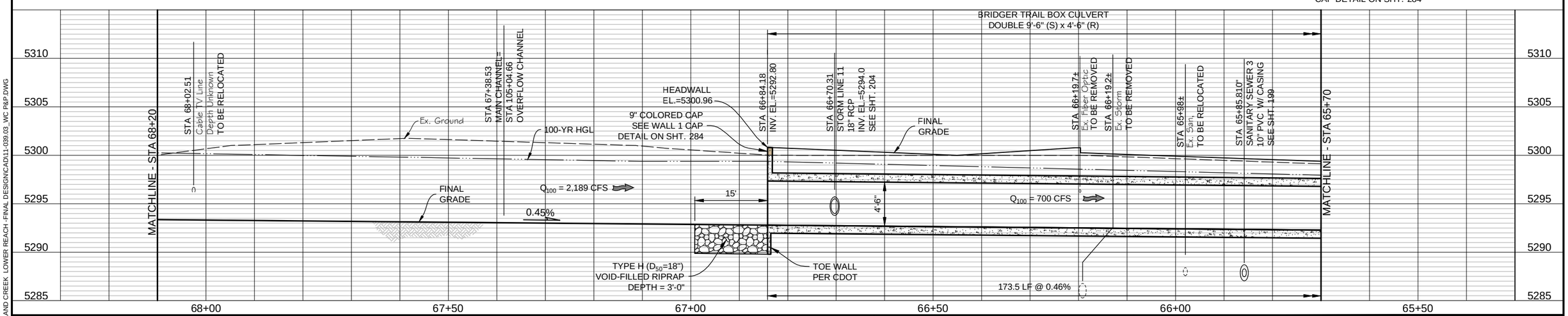

Computer File Information		
Creation Date: 08/19/14	Initials: JHK	
Last Modification Date: 06/18/15	Initials: JHK	
Full Path: P:\11-039.03\CAD		
Drawing File Name: 11-039.03_WC P&P.dwg		
AutoCAD 2014	Scale: AS SHOWN	FEET

MULLER ENGINEERING CO., INC.
CONSULTING ENGINEERS
777 S. WADSWORTH BLVD. 4-100
LAKEWOOD, COLORADO 80226
(303) 988-4939
MULLER
MEC PROJECT NO. 11039.03

COLORADO REGISTERED PROFESSIONAL ENGINEER CHRISTOPHER L. KIEFER 37254 6/18/15

Sheet Revisions		
Date:	Comments	Init.

As Constructed
No Revisions:
Revised:
Void:

Region 4 RDM
CITY OF BOULDER

WONDERLAND CREEK - GREENWAYS IMPROVEMENT PROJECT
WONDERLAND CREEK PLAN AND PROFILE

Designer:	CLK	Structure Numbers	
Detailer:	JHK		
Sheet Subset:	DRAINAGE	Subset Sheets:	WC-7

Project No./Code
STM 110-081
18405
Sheet Number: 115

PLOTTED: 6/19/2015 10:40:08 AM
NAME: P:\11-039.03 WONDERLAND CREEK LOWER REACH -FINAL DESIGN\CAD\11-039.03_WC P&P.DWG

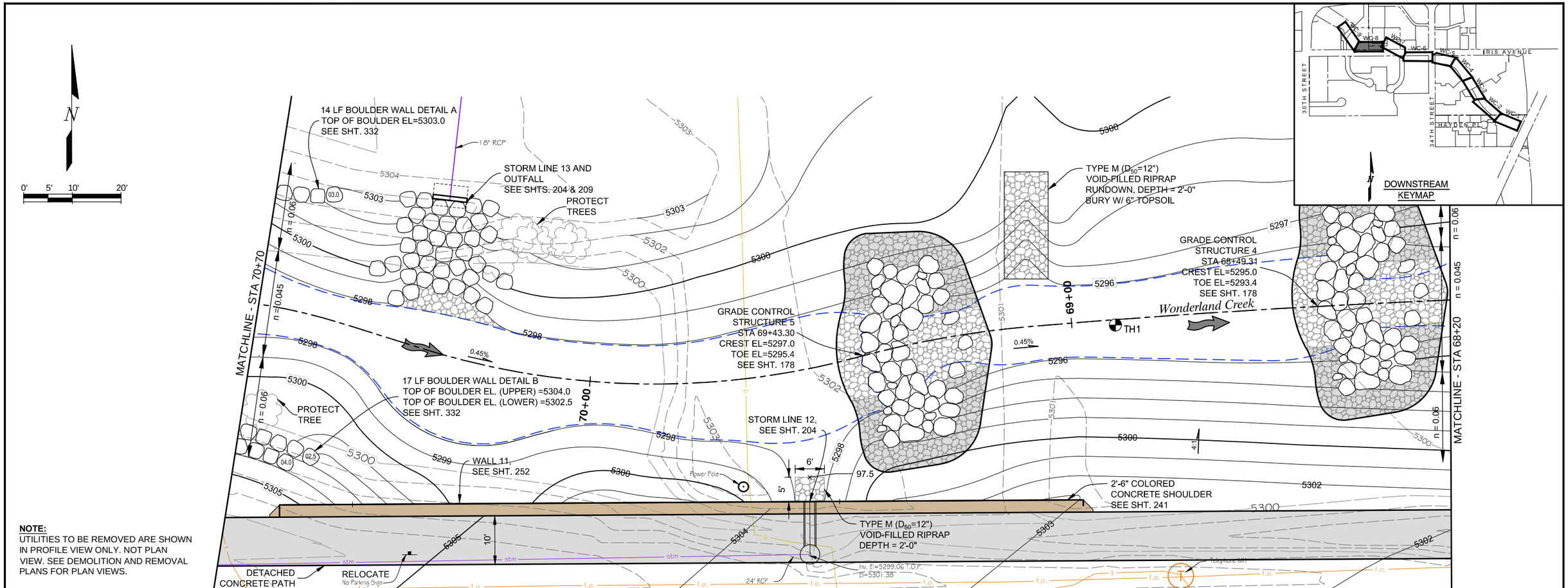

NOTE:
UTILITIES TO BE REMOVED ARE SHOWN IN PROFILE VIEW ONLY. NOT PLAN VIEW. SEE DEMOLITION AND REMOVAL PLANS FOR PLAN VIEWS.

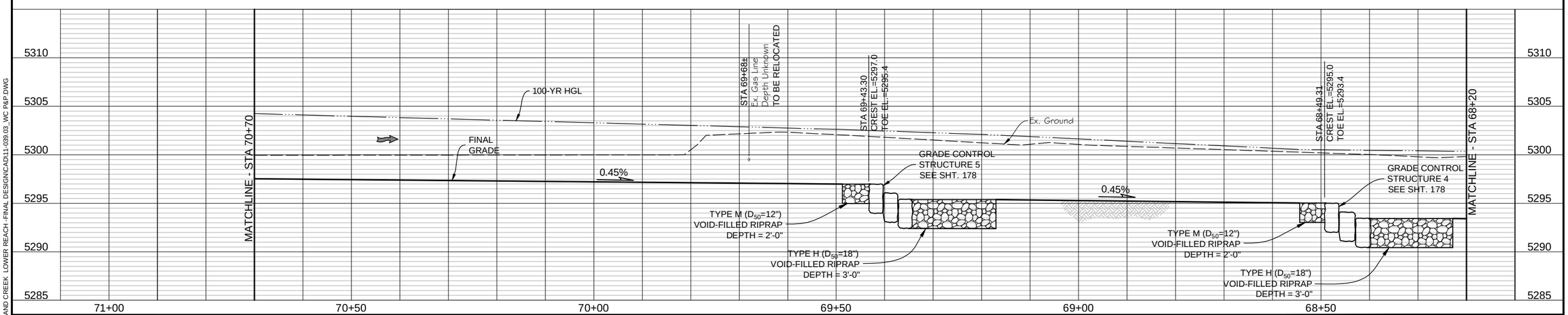

Computer File Information		
Creation Date: 08/19/14	Initials: JHK	
Last Modification Date: 06/18/15	Initials: JHK	
Full Path: P:\11-039.03\CAD		
Drawing File Name: 11-039.03_WC P&P.dwg		
AutoCAD 2014	Scale: AS SHOWN	FEET

MULLER ENGINEERING CO., INC.
CONSULTING ENGINEERS
777 S. WADSWORTH BLVD. 4-100
LAKEWOOD, COLORADO 80226
(303) 988-4939
MULLER
MEC PROJECT NO. 11039.03

COLORADO REGISTERED PROFESSIONAL ENGINEER
CHRISTOPHER L. KREGENOW
37254
6/18/15

Sheet Revisions		
Date:	Comments	Init.

As Constructed
No Revisions:
Revised:
Void:

Region 4 RDM
CITY OF BOULDER

WONDERLAND CREEK - GREENWAYS IMPROVEMENT PROJECT
WONDERLAND CREEK PLAN AND PROFILE

Designer:	CLK	Structure Numbers	
Detailer:	JHK		
Sheet Subset:	DRAINAGE	Subset Sheets:	WC-8

Project No./Code
STM 110-081
18405
Sheet Number: 116

PLOTTED: 6/19/2015 10:40:26 AM
NAME: P:\11-039.03 WONDERLAND CREEK LOWER REACH -FINAL DESIGN\CAD\11-039.03_WC P&P.DWG

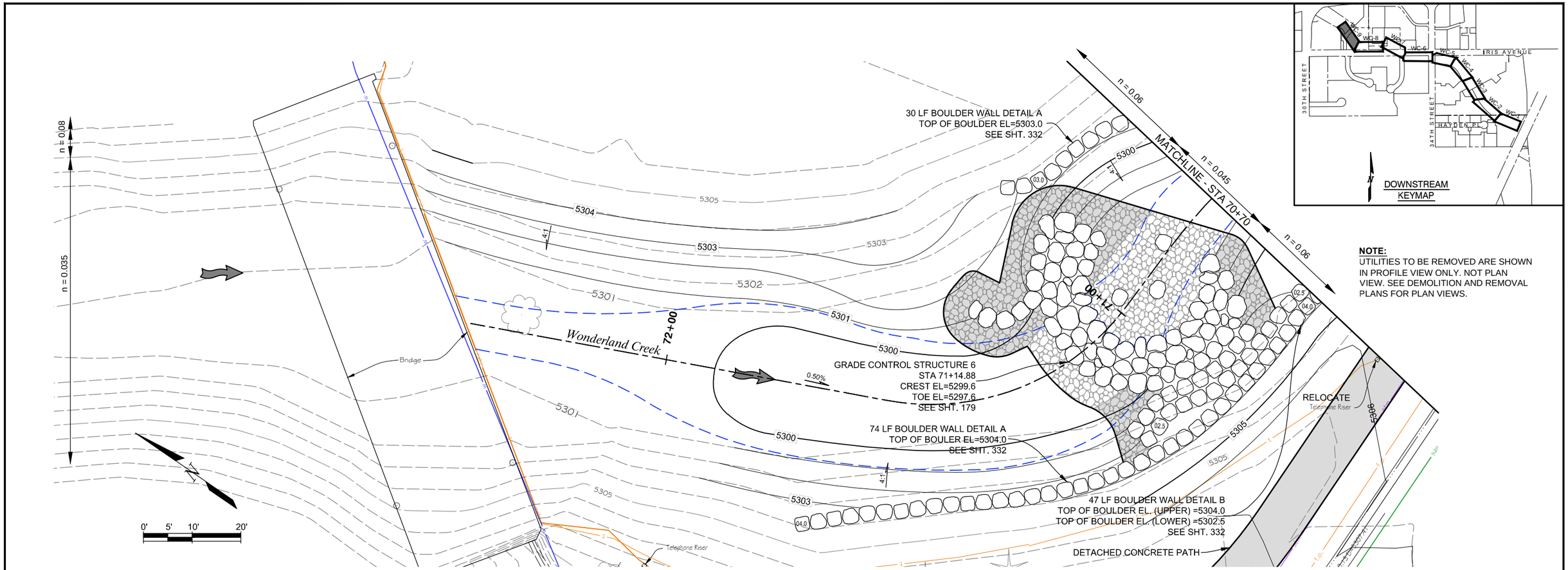

NOTE:
UTILITIES TO BE REMOVED ARE SHOWN IN PROFILE VIEW ONLY. NOT PLAN VIEW. SEE DEMOLITION AND REMOVAL PLANS FOR PLAN VIEWS.

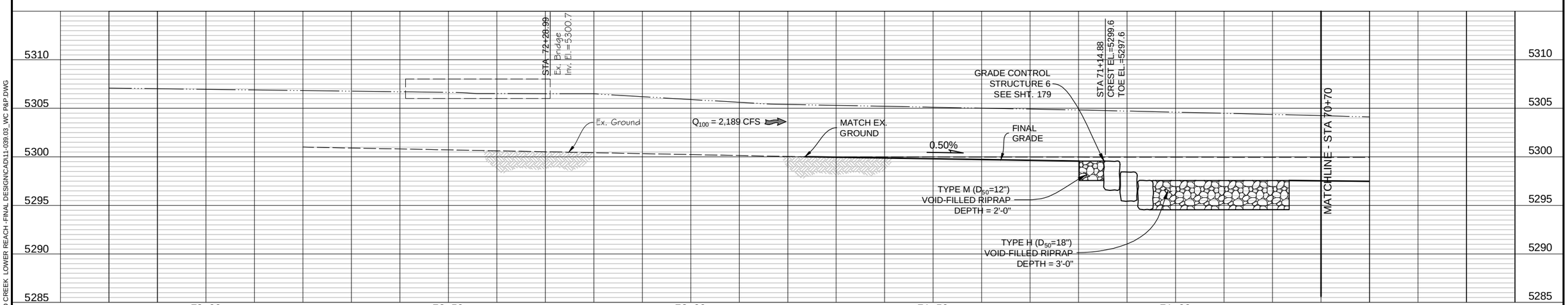

Computer File Information		
Creation Date: 08/19/14	Initials: JHK	
Last Modification Date: 06/18/15	Initials: JHK	
Full Path: P:\11-039.03\CAD		
Drawing File Name: 11-039.03_WC P&P.dwg		
AutoCAD 2014	Scale: AS SHOWN	FEET

MULLER ENGINEERING CO., INC.
CONSULTING ENGINEERS
777 S. WADSWORTH BLVD. 4-100
LAKEWOOD, COLORADO 80226
(303) 988-4939
MULLER
MEC PROJECT NO. 11039.03

COLORADO REGISTERED PROFESSIONAL ENGINEER CHRISTOPHER L. KRAGER 37254 6/18/15

Sheet Revisions		
Date:	Comments	Init.

As Constructed
No Revisions:
Revised:
Void:

Region 4 RDM
CITY OF BOULDER

WONDERLAND CREEK - GREENWAYS IMPROVEMENT PROJECT
WONDERLAND CREEK PLAN AND PROFILE

Designer:	CLK	Structure Numbers	
Detailer:	JHK		
Sheet Subset:	DRAINAGE	Subset Sheets:	WC-9

Project No./Code
STM 110-081
18405
Sheet Number: 117

PLOTTED: 6/19/2015 10:40:43 AM
NAME: P:\11-039.03 WONDERLAND CREEK LOWER REACH -FINAL DESIGN\CAD\11-039.03_WC P&P.DWG

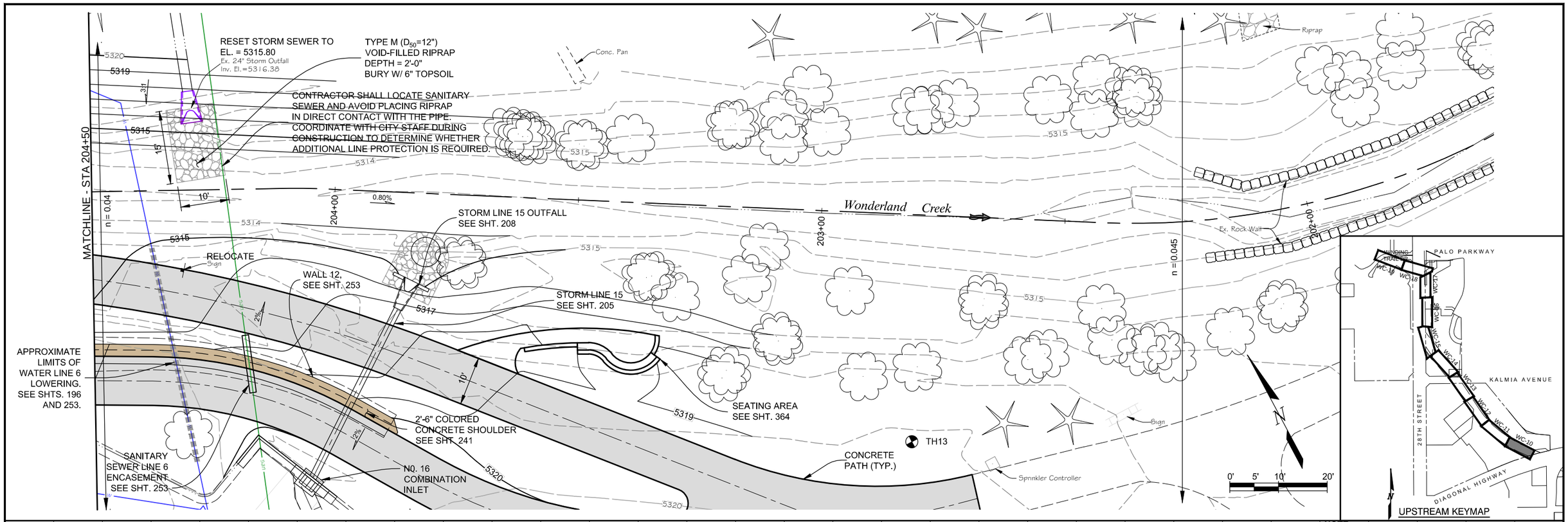

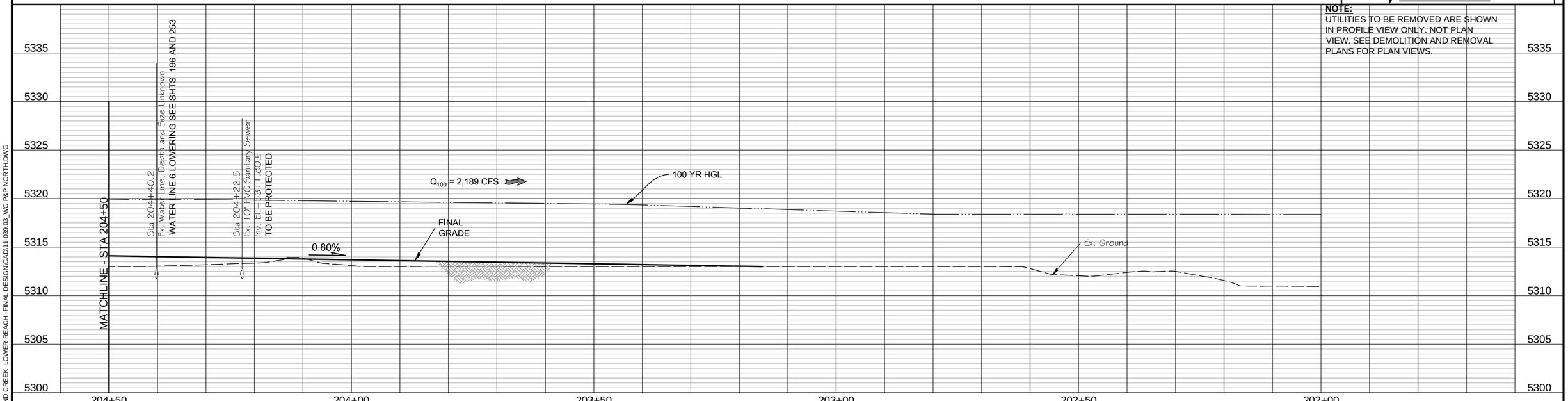

NOTE:
UTILITIES TO BE REMOVED ARE SHOWN IN PROFILE VIEW ONLY. NOT PLAN VIEW. SEE DEMOLITION AND REMOVAL PLANS FOR PLAN VIEWS.

PLOTTED: 6/19/2015 10:41:30 AM
NAME: P:\11-039.03 WONDERLAND CREEK\ LOWER REACH -FINAL DESIGN\CAD\11-039.03_WC P&P NORTH.DWG

Computer File Information	
Creation Date: 11/10/14	Initials: JHK
Last Modification Date: 06/18/15	Initials: JHK
Full Path: P:\11-039.03\CAD	
Drawing File Name: 11-039.03_WC P&P NORTH.dwg	
AutoCAD 2014	Scale: AS SHOWN

MULLER ENGINEERING CO., INC.
CONSULTING ENGINEERS
777 S. WADSWORTH BLVD. 4-100
LAKEWOOD, COLORADO 80226
(303) 988-4939
MULLER
MEC PROJECT NO. 11039.03

COLORADO REGISTERED PROFESSIONAL ENGINEER CHRISTOPHER L. KABEELER 37254 6/18/15

Sheet Revisions		
Date:	Comments	Init.

As Constructed
No Revisions:
Revised:
Void:

Region 4 RDM
CITY OF BOULDER

WONDERLAND CREEK - GREENWAYS IMPROVEMENT PROJECT
WONDERLAND CREEK PLAN AND PROFILE

Designer:	MKN	Structure Numbers	
Detailer:	JHK		
Sheet Subset:	DRAINAGE	Subset Sheets:	WC-10

Project No./Code
STM 110-081
18405
Sheet Number: 118

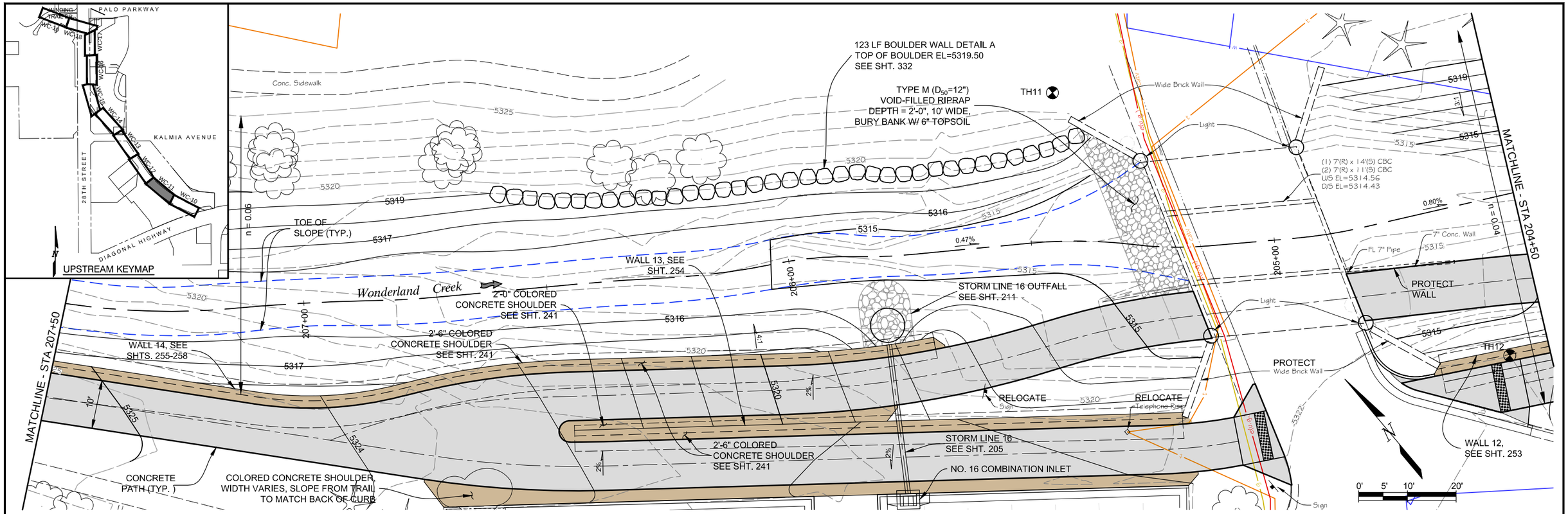

NOTE:
UTILITIES TO BE REMOVED ARE SHOWN IN PROFILE VIEW ONLY. NOT PLAN VIEW. SEE DEMOLITION AND REMOVAL PLANS FOR PLAN VIEWS.

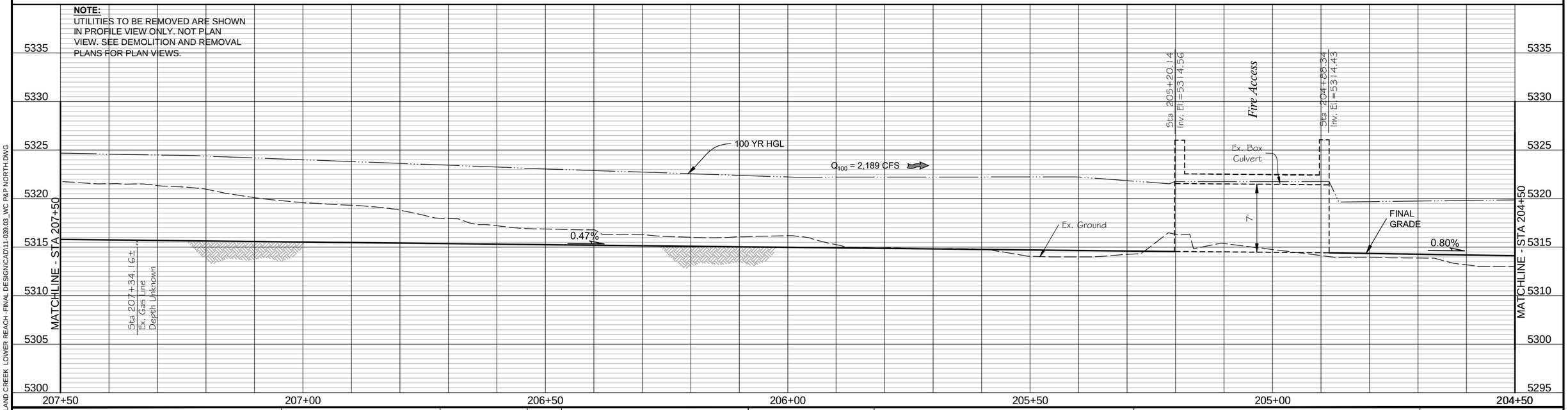

Computer File Information			
Creation Date: 11/10/14	Initials: JHK		
Last Modification Date: 06/18/15	Initials: JHK		
Full Path: P:\11-039.03\CAD			
Drawing File Name: 11-039.03_WC P&P NORTH.dwg			
AutoCAD 2014	Scale: AS SHOWN		

MULLER ENGINEERING CO., INC.
CONSULTING ENGINEERS
777 S. WADSWORTH BLVD. 4-100
LAKEWOOD, COLORADO 80226
(303) 988-4939
MULLER
MEC PROJECT NO. 11039.03

COLORADO REGISTERED CHRISTOPHER L. KRIEGER 37254 6/18/15 PROFESSIONAL ENGINEER

Sheet Revisions		
Date:	Comments	Init.

As Constructed
No Revisions:
Revised:
Void:

Region 4 RDM
CITY OF BOULDER

WONDERLAND CREEK - GREENWAYS IMPROVEMENT PROJECT
WONDERLAND CREEK PLAN AND PROFILE

Designer:	MKN	Structure Numbers	
Detailer:	JHK		
Sheet Subset:	DRAINAGE	Subset Sheets:	WC-11

Project No./Code
STM 110-081
18405
Sheet Number: 119

PLOTTED: 6/19/2015 10:41:46 AM
NAME: P:\11-039.03 WONDERLAND CREEK LOWER REACH -FINAL DESIGN\CAD\11-039.03_WC P&P NORTH.DWG

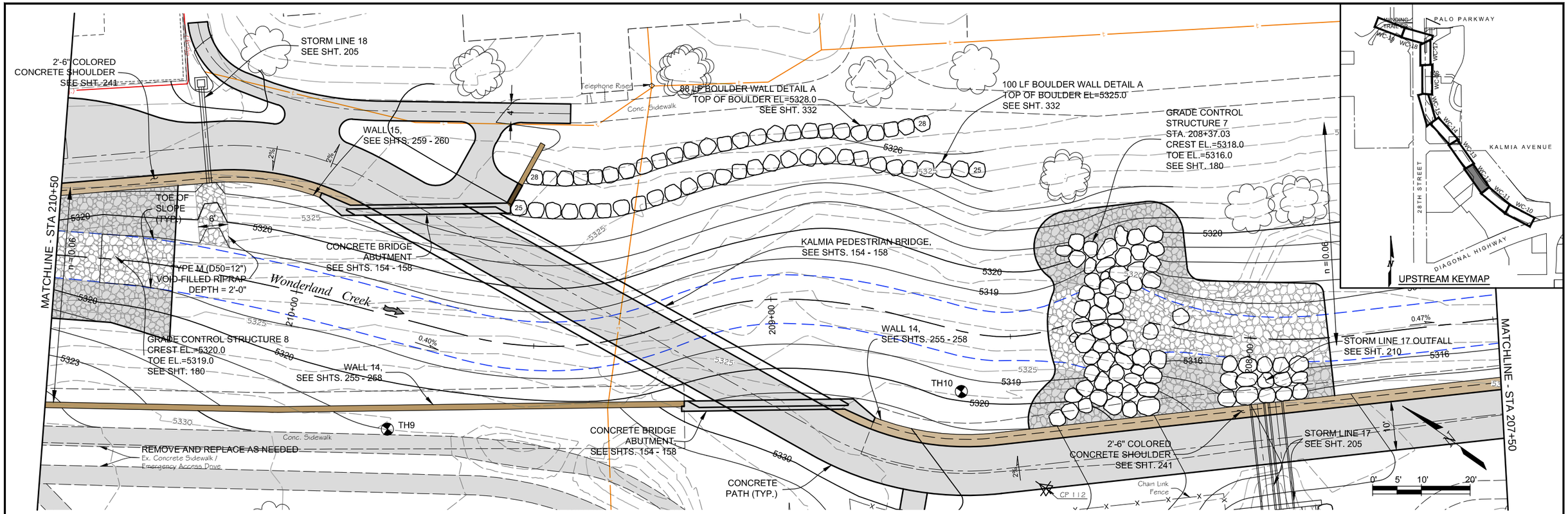

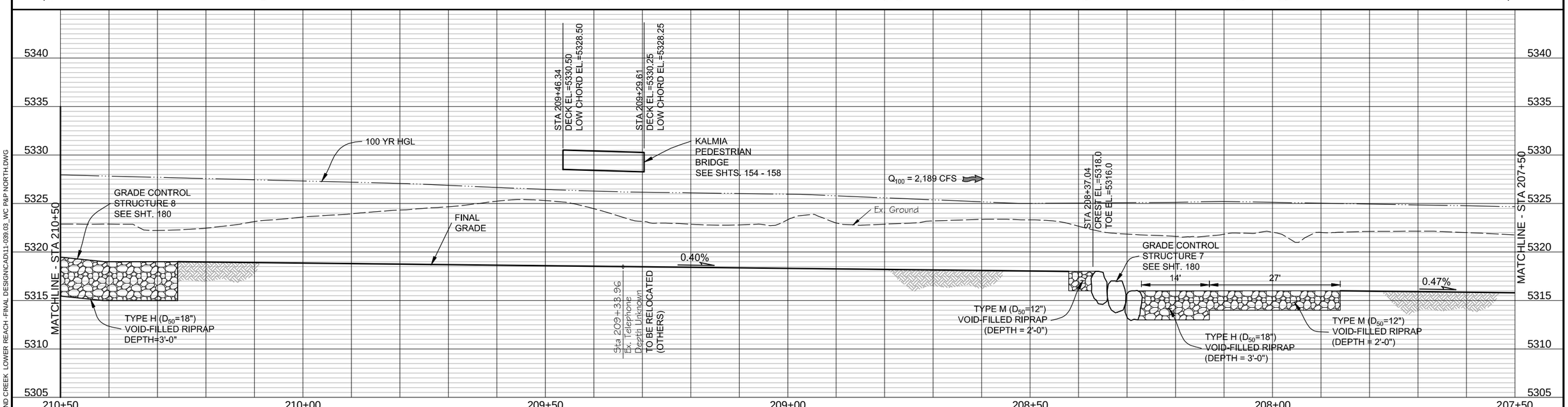

PLOTTED: 6/19/2015 10:42:01 AM
NAME: P:\11-039.03 WONDERLAND CREEK LOWER REACH -FINAL DESIGN\CAD\11-039.03_WC P&P NORTH.DWG

Computer File Information		
Creation Date: 11/10/14	Initials: JHK	
Last Modification Date: 06/18/15	Initials: JHK	
Full Path: P:\11-039.03\CAD		
Drawing File Name: 11-039.03_WC P&P NORTH.dwg		
AutoCAD 2014	Scale: AS SHOWN	

MULLER ENGINEERING CO., INC.
CONSULTING ENGINEERS
777 S. WADSWORTH BLVD. 4-100
LAKEWOOD, COLORADO 80226
(303) 988-4939
MULLER
MEC PROJECT NO. 11039.03

COLORADO REGISTERED PROFESSIONAL ENGINEER CHRISTOPHER L. KRIEGER 37254 6/18/15

Sheet Revisions		
Date:	Comments	Init.

As Constructed
No Revisions:
Revised:
Void:

Region 4 RDM
CITY OF BOULDER

WONDERLAND CREEK - GREENWAYS IMPROVEMENT PROJECT
WONDERLAND CREEK PLAN AND PROFILE

Designer:	MKN	Structure Numbers	
Detailer:	JHK		
Sheet Subset:	DRAINAGE	Subset Sheets:	WC-12

Project No./Code
STM 110-081
18405
Sheet Number: 120

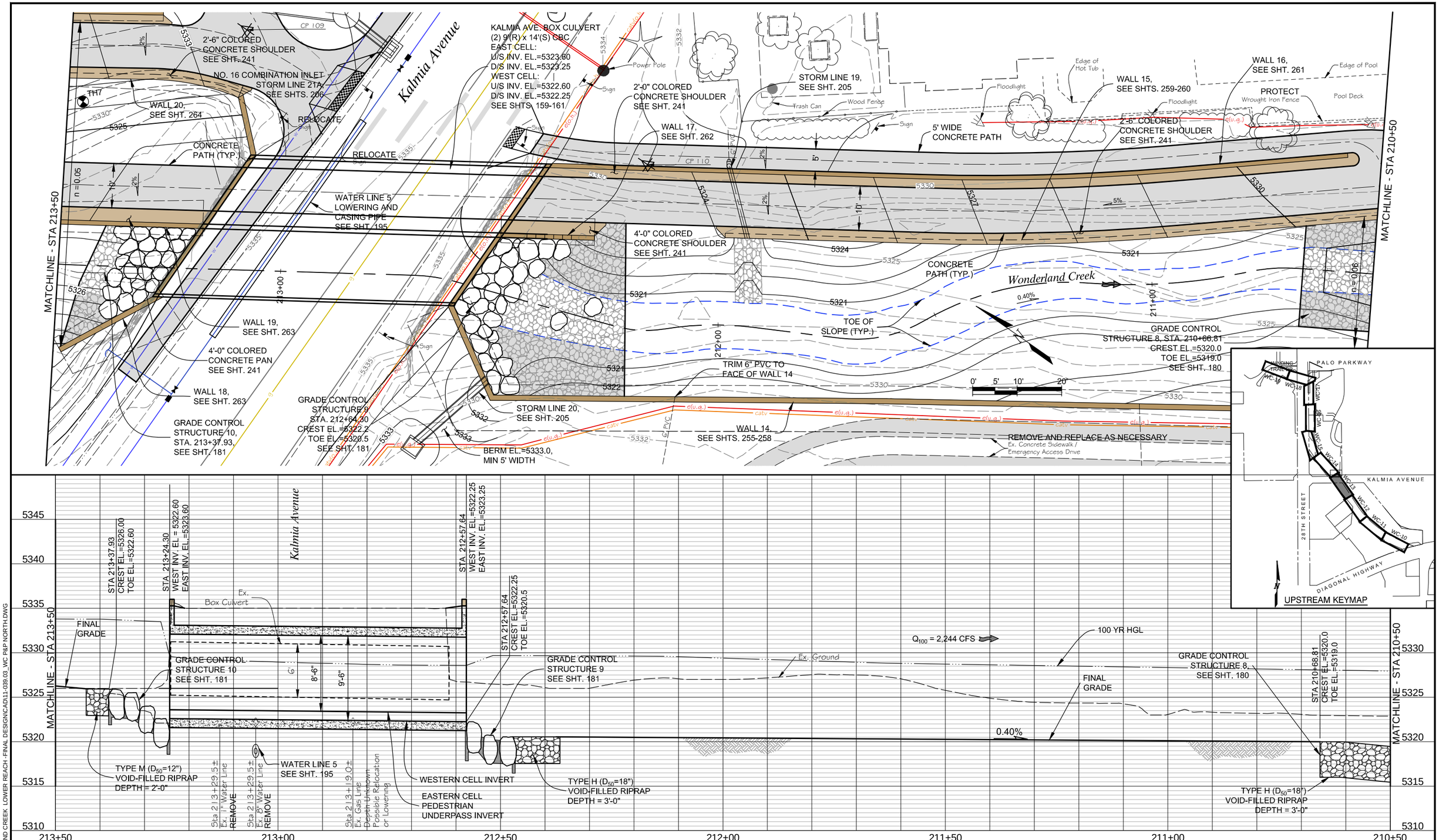

PLOTTED: 6/19/2015 10:42:17 AM
NAME: P:\11-039.03 WONDERLAND CREEK LOWER REACH -FINAL DESIGN\CAD\11-039.03_WC P&P NORTH.DWG

Computer File Information		
Creation Date: 11/10/14	Initials: JHK	
Last Modification Date: 06/18/15	Initials: JHK	
Full Path: P:\11-039.03\CAD		
Drawing File Name: 11-039.03_WC P&P NORTH.dwg		
AutoCAD 2014	Scale: AS SHOWN	

MULLER ENGINEERING CO., INC.
CONSULTING ENGINEERS
777 S. WADSWORTH BLVD. 4-100
LAKEWOOD, COLORADO 80226
(303) 988-4939
MULLER
MEC PROJECT NO. 11039.03

COLORADO REGISTERED PROFESSIONAL ENGINEER CHRISTOPHER L. KRIEGER 37254 6/18/15

Sheet Revisions		
Date:	Comments	Init.

As Constructed
No Revisions:
Revised:
Void:

Region 4 RDM
CITY OF BOULDER

WONDERLAND CREEK - GREENWAYS IMPROVEMENT PROJECT

WONDERLAND CREEK PLAN AND PROFILE

Designer:	MKN	Structure Numbers	
Detailer:	JHK		
Sheet Subset:	DRAINAGE	Subset Sheets:	WC-13

Project No./Code
STM 110-081
18405
Sheet Number: 121

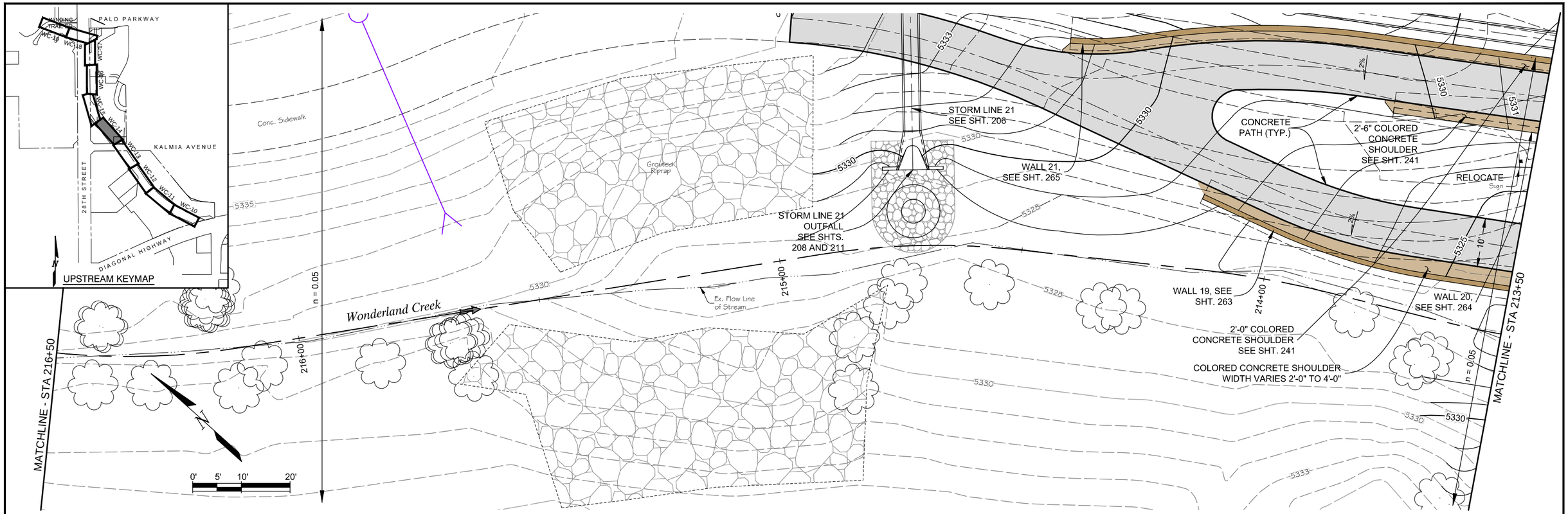

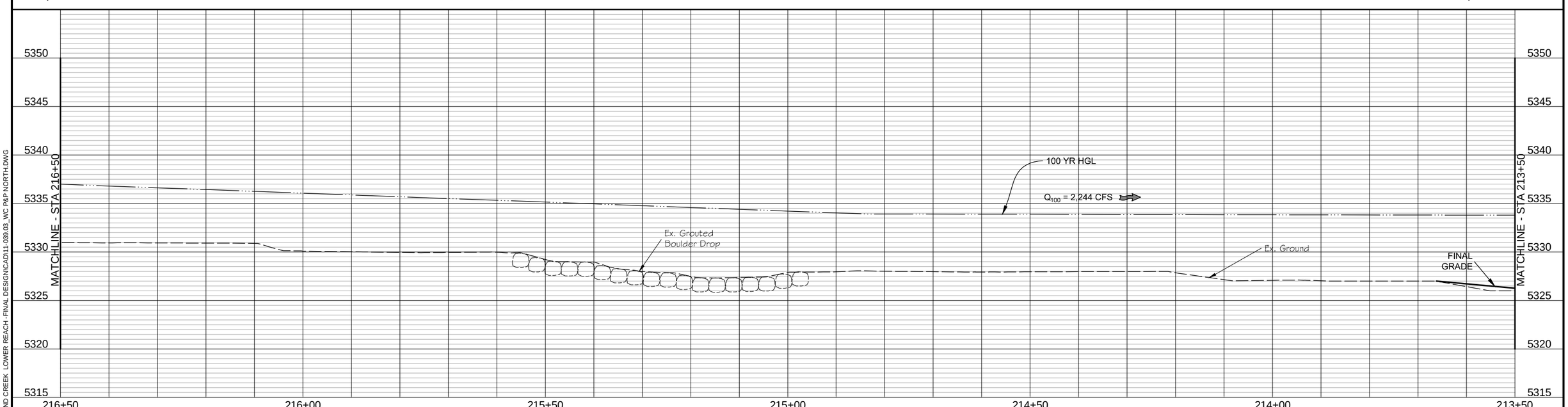

Computer File Information			
Creation Date: 11/10/14	Initials: JHK		
Last Modification Date: 06/18/15	Initials: JHK		
Full Path: P:\11-039.03\CAD			
Drawing File Name: 11-039.03_WC P&P NORTH.dwg			
AutoCAD 2014	Scale: AS SHOWN		

MULLER ENGINEERING CO., INC.
CONSULTING ENGINEERS
777 S. WADSWORTH BLVD. 4-100
LAKEWOOD, COLORADO 80226
(303) 988-4939

MULLER

MEC PROJECT NO. 11039.03

COLORADO REGISTERED PROFESSIONAL ENGINEER CHRISTOPHER L. KRIEGER 37254 6/18/15

Sheet Revisions		
Date:	Comments	Init.

As Constructed

No Revisions:

Revised:

Void:

Region 4 RDM

CITY OF BOULDER

WONDERLAND CREEK - GREENWAYS IMPROVEMENT PROJECT

WONDERLAND CREEK PLAN AND PROFILE

Designer:	MKN	Structure Numbers	
Detailer:	JHK		
Sheet Subset:	DRAINAGE	Subset Sheets:	WC-14

Project No./Code

STM 110-081

18405

Sheet Number: 122

PLOTTED: 6/19/2015 10:42:30 AM
NAME: P:\11-039.03 WONDERLAND CREEK LOWER REACH -FINAL DESIGN\CAD\11-039.03_WC P&P NORTH.DWG

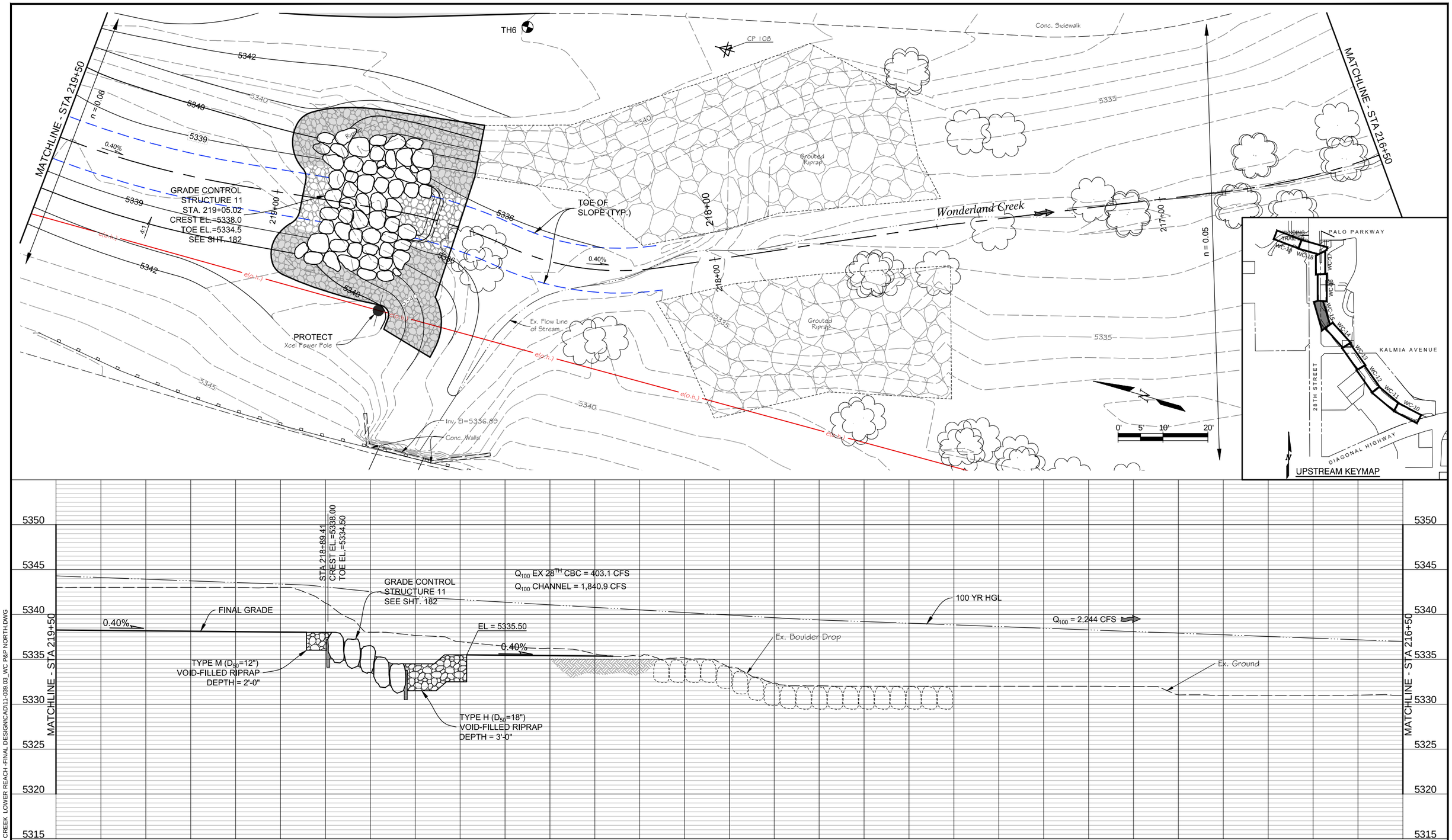

PLOTTED: 6/19/2015 10:42:43 AM
NAME: P:\11-039.03 WONDERLAND CREEK\ LOWER REACH -FINAL DESIGN\CAD\11-039.03_WC P&P NORTH.DWG

Computer File Information	
Creation Date: 11/10/14	Initials: JHK
Last Modification Date: 06/18/15	Initials: JHK
Full Path: P:\11-039.03\CAD	
Drawing File Name: 11-039.03_WC P&P NORTH.dwg	
AutoCAD 2014	Scale: AS SHOWN

MULLER ENGINEERING CO., INC.
CONSULTING ENGINEERS
777 S. WADSWORTH BLVD. 4-100
LAKEWOOD, COLORADO 80226
(303) 988-4939
MULLER
MEC PROJECT NO. 11039.03

COLORADO REGISTERED PROFESSIONAL ENGINEER CHRISTOPHER L. KABEER 37254 6/18/15

Sheet Revisions		
Date:	Comments	Init.

As Constructed
No Revisions:
Revised:
Void:

Region 4 RDM

CITY OF BOULDER

WONDERLAND CREEK - GREENWAYS IMPROVEMENT PROJECT

WONDERLAND CREEK PLAN AND PROFILE

Designer:	MKN	Structure Numbers	
Detailer:	JHK		
Sheet Subset:	DRAINAGE	Subset Sheets:	WC-15

Project No./Code
STM 110-081
18405
Sheet Number: 123

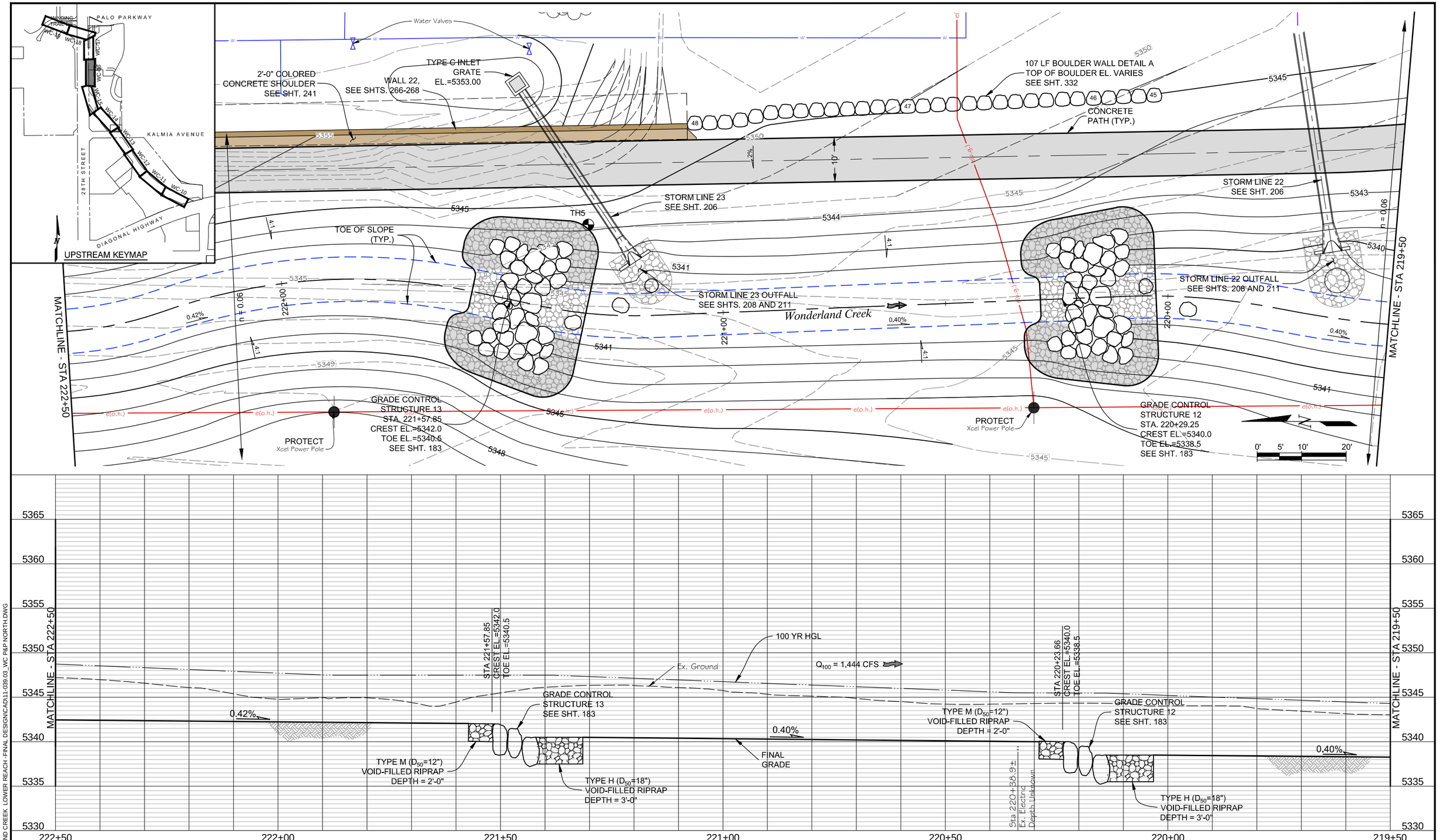

Computer File Information		
Creation Date: 11/10/14	Initials: JHK	
Last Modification Date: 06/18/15	Initials: JHK	
Full Path: P:\11-039.03\CAD		
Drawing File Name: 11-039.03_WC P&P NORTH.dwg		
AutoCAD 2014	Scale: AS SHOWN	

MULLER ENGINEERING CO., INC.
CONSULTING ENGINEERS
777 S. WADSWORTH BLVD. 4-100
LAKEWOOD, COLORADO 80226
(303) 988-4939
MULLER
MEC PROJECT NO. 11039.03

COLORADO REGISTERED CHRISTOPHER L. KRIEGER 37254 6/18/15 PROFESSIONAL ENGINEER

Sheet Revisions		
Date:	Comments	Init.

As Constructed
No Revisions:
Revised:
Void:

Region 4 RDM
CITY OF BOULDER

WONDERLAND CREEK - GREENWAYS IMPROVEMENT PROJECT

WONDERLAND CREEK PLAN AND PROFILE

Designer:	MKN	Structure Numbers	
Detailer:	JHK		
Sheet Subset:	DRAINAGE	Subset Sheets:	WC-16

Project No./Code
STM 110-081
18405
Sheet Number: 124

PLOTTED: 6/19/2015 10:42:57 AM
NAME: P:\11-039.03 WONDERLAND CREEK LOWER REACH -FINAL DESIGN\CAD\11-039.03_WC P&P NORTH.DWG

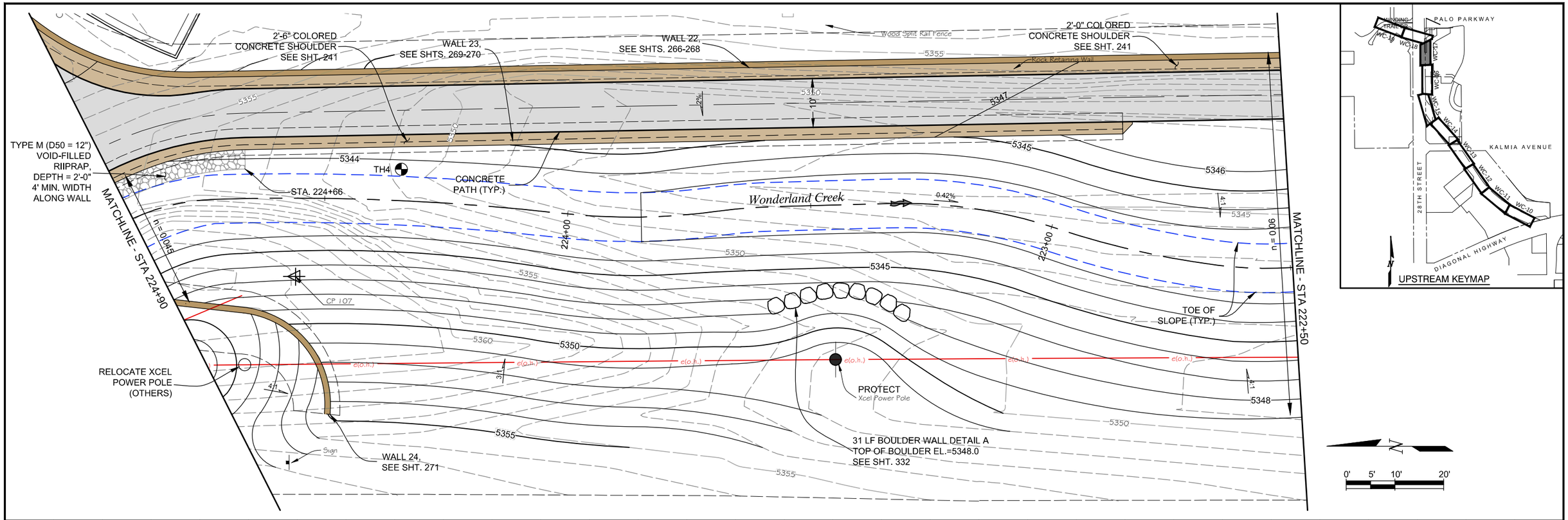

Computer File Information	
Creation Date: 11/10/14	Initials: JHK
Last Modification Date: 06/18/15	Initials: JHK
Full Path: P:\11-039.03\CAD	
Drawing File Name: 11-039.03_WC P&P NORTH.dwg	
AutoCAD 2014	Scale: AS SHOWN

MULLER ENGINEERING CO., INC.
CONSULTING ENGINEERS
777 S. WADSWORTH BLVD. 4-100
LAKEWOOD, COLORADO 80226
(303) 988-4939
MULLER
MEC PROJECT NO. 11039.03

COLORADO REGISTERED CHRISTOPHER L. KRIEGER 37254 6/18/15 PROFESSIONAL ENGINEER

Sheet Revisions		
Date:	Comments	Init.

As Constructed
No Revisions:
Revised:
Void:

Region 4 RDM
CITY OF BOULDER

WONDERLAND CREEK - GREENWAYS IMPROVEMENT PROJECT
WONDERLAND CREEK PLAN AND PROFILE

Designer:	MKN	Structure Numbers	
Detailer:	JHK		
Sheet Subset:	DRAINAGE	Subset Sheets:	WC-17

Project No./Code
STM 110-081
18405
Sheet Number: 125

PLOTTED: 6/19/2015 10:43:11 AM
NAME: P:\11-039.03 WONDERLAND CREEK LOWER REACH -FINAL DESIGN\CAD\11-039.03_WC P&P NORTH.DWG

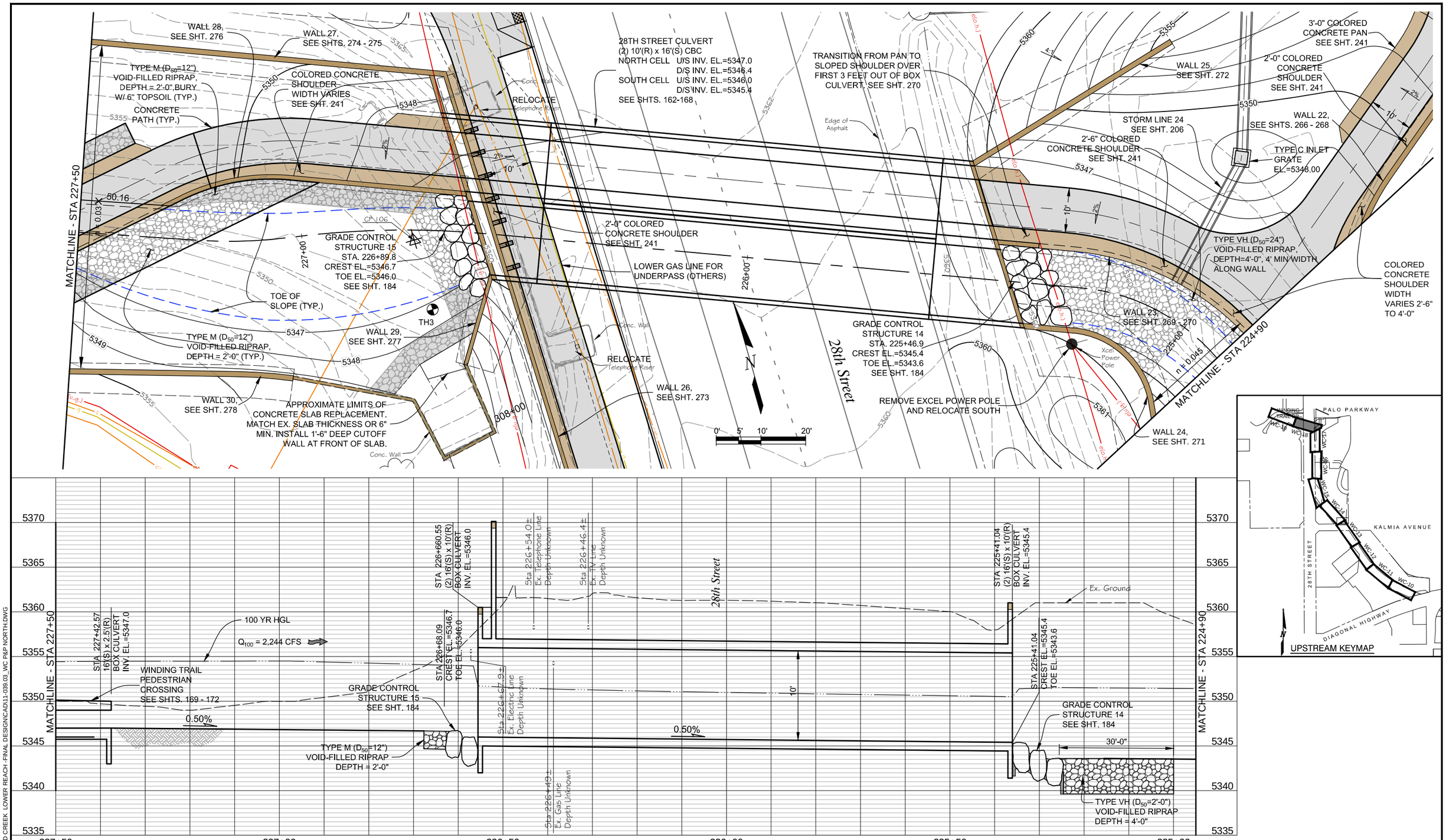

Computer File Information		
Creation Date: 11/10/14		Initials: JHK
Last Modification Date: 06/18/15		Initials: JHK
Full Path: P:\11-039.03\CAD		
Drawing File Name: 11-039.03_WC P&P NORTH.dwg		
AutoCAD 2014	Scale: AS SHOWN	

MULLER ENGINEERING CO., INC.
CONSULTING ENGINEERS
777 S. WADSWORTH BLVD. 4-100
LAKEWOOD, COLORADO 80226
(303) 988-4939
MULLER
MEC PROJECT NO. 11039.03

COLORADO REGISTERED CHRISTOPHER L. KRAGENBRINK 37254 PROFESSIONAL ENGINEER 6/18/15

Sheet Revisions		
Date:	Comments	Init.

As Constructed
No Revisions:
Revised:
Void:

Region 4 RDM
CITY OF BOULDER

WONDERLAND CREEK - GREENWAYS IMPROVEMENT PROJECT
WONDERLAND CREEK PLAN AND PROFILE

Designer:	MKN	Structure Numbers	
Detailer:	JHK		
Sheet Subset:	DRAINAGE	Subset Sheets:	WC-18

Project No./Code
STM 110-081
18405
Sheet Number: 126

PLOTTED: 6/19/2015 10:43:26 AM
NAME: P:\11-039.03 WONDERLAND CREEK LOWER REACH -FINAL DESIGN\CAD\11-039.03_WC P&P NORTH.DWG

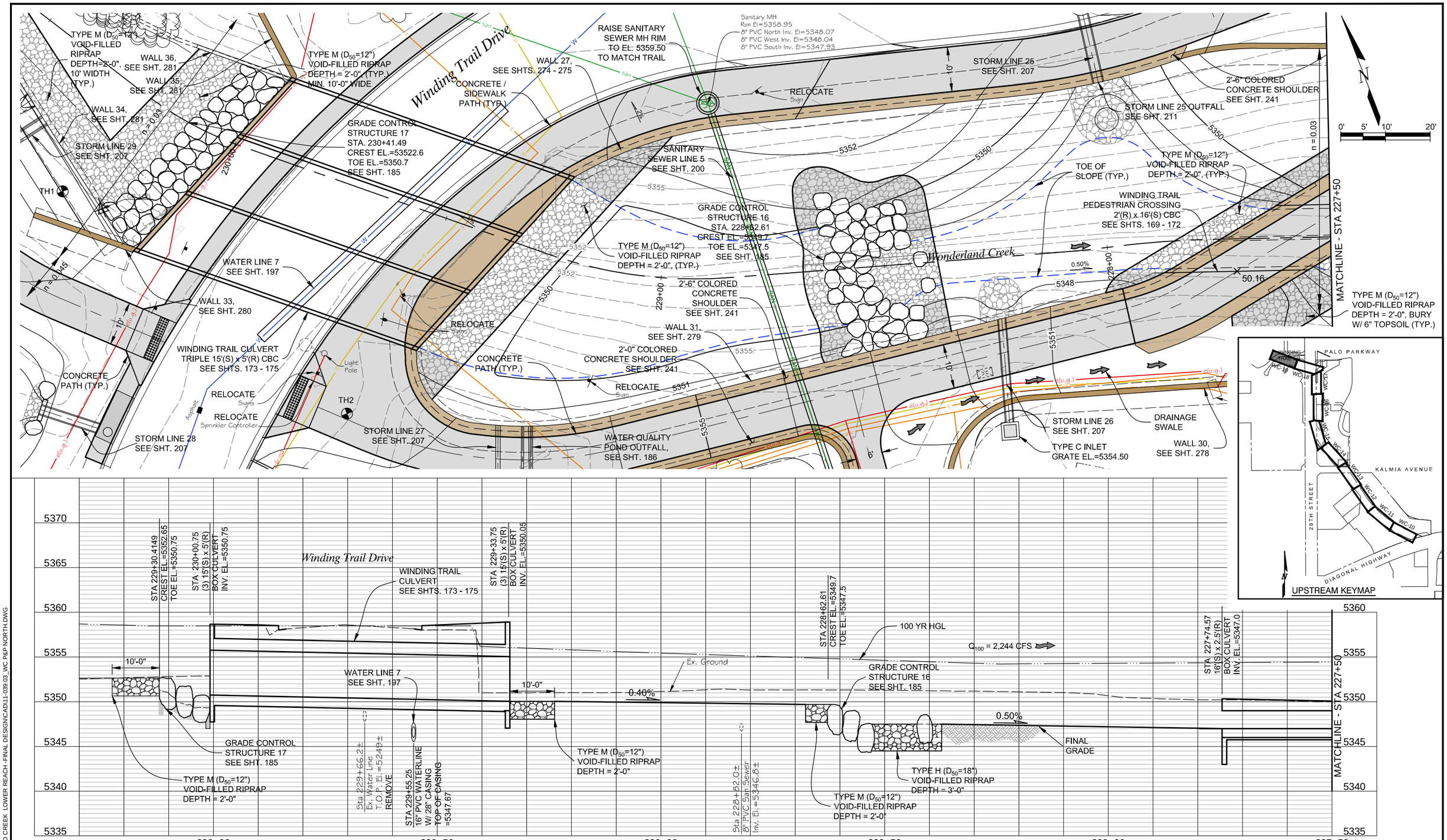

Computer File Information	
Creation Date: 11/10/14	Initials: JHK
Last Modification Date: 06/18/15	Initials: JHK
Full Path: P:\11-039.03\CAD	
Drawing File Name: 11-039.03_WC P&P NORTH.dwg	
AutoCAD 2014	Scale: AS SHOWN

MULLER ENGINEERING CO., INC.
CONSULTING ENGINEERS
777 S. WADSWORTH BLVD. 4-100
LAKEWOOD, COLORADO 80226
(303) 988-4939
MULLER
MEC PROJECT NO. 11039.03

COLORADO REGISTERED PROFESSIONAL ENGINEER CHRISTOPHER L. KRAEGER 37254 6/18/15

Sheet Revisions		
Date:	Comments	Init.

As Constructed
No Revisions:
Revised:
Void:

Region 4 RDM

CITY OF BOULDER

WONDERLAND CREEK - GREENWAYS IMPROVEMENT PROJECT

WONDERLAND CREEK PLAN AND PROFILE

Designer:	MKN	Structure Numbers	
Detailer:	JHK		
Sheet Subset:	DRAINAGE	Subset Sheets:	WC-19

Project No./Code
STM 110-081
18405
Sheet Number: 127

PLOTTED: 6/19/2015 10:43:44 AM
NAME: P:\11-039.03 WONDERLAND CREEK LOWER REACH -FINAL DESIGN\CAD\11-039.03_WC P&P NORTH.DWG

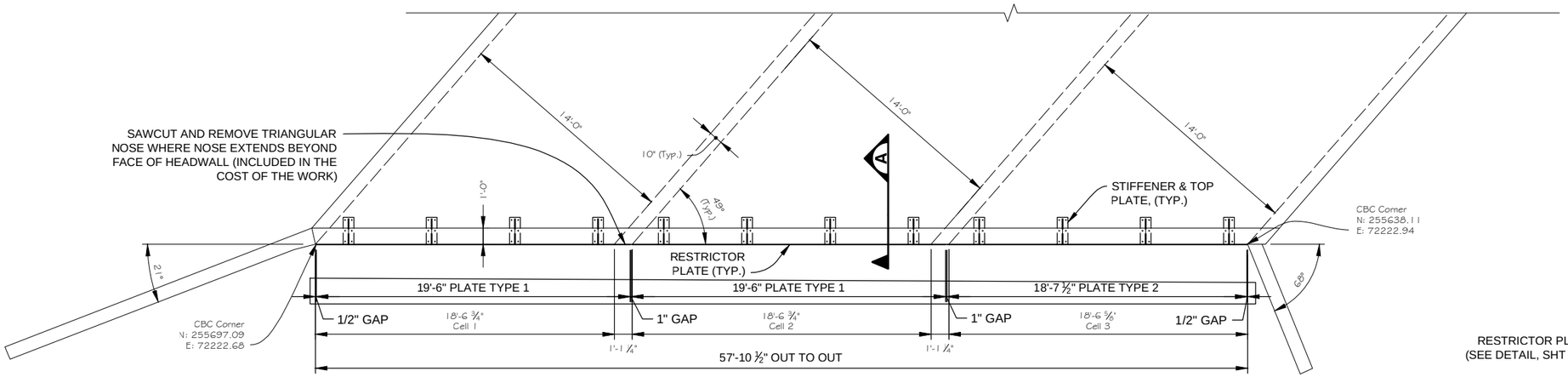

PLAN

0' 2' 4' 8'
SCALE: 1/8" = 1'-0"

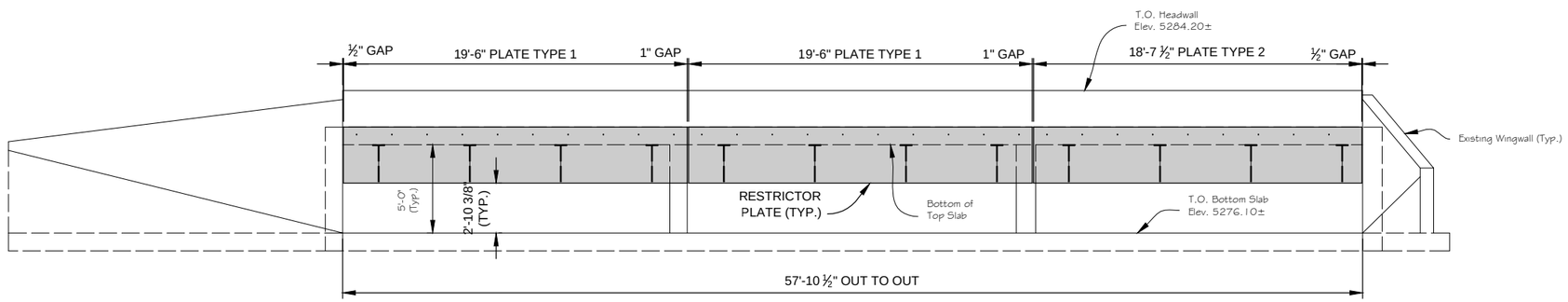

ELEVATION

0' 2' 4' 8'
SCALE: 1/8" = 1'-0"

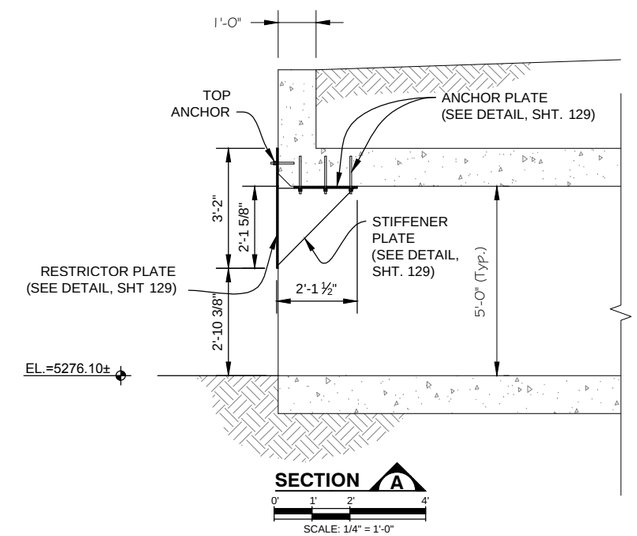

SECTION A

0' 1' 2' 4'
SCALE: 1/4" = 1'-0"

NOTES:

1. THESE PLANS ARE A SCHEMATIC OF THE RESTRICTOR PLATES. THE CONTRACTOR SHALL PROVIDE SHOP DRAWINGS TO THE ENGINEER FOR REVIEW.
2. DIMENSIONS CONTAINED IN THESE PLANS ARE CALCULATED FROM A RECENT FIELD SURVEY AND THE STRUCTURE INSPECTION REPORTS. THESE DIMENSIONS MAY NEED TO BE ADJUSTED TO MATCH THE EXISTING STRUCTURE. THE CONTRACTOR SHALL VERIFY ALL DEPENDENT DIMENSIONS IN THE FIELD BEFORE ORDERING OR FABRICATING ANY MATERIAL.
3. STEEL PLATES SHALL BE ASTM A36 GRADE 36 STEEL (Fy = 36 ksi).
4. THE STIFFENER & ANCHOR PLATE ASSEMBLIES SHALL BE FABRICATED AND INSTALLED INDEPENDENTLY OF THE RESTRICTOR PLATE. THE RESTRICTOR PLATE SHALL BE FIELD WELDED TO THE STIFFENERS ONCE OPENING DIMENSIONS HAVE BEEN VERIFIED.
5. ANCHOR BOLTS SHALL BE OF THE TYPE AND DIMENSION SPECIFIED IN THE PLANS, OR AN APPROVED EQUAL. SEE ANCHOR BOLT NOTES, SHT. 129 FOR ADDITIONAL INFORMATION.
6. ALL STEEL SHALL BE PAINTED AFTER FABRICATION IN ACCORDANCE WITH SECTION 509 OF THE CDOT STANDARD SPECIFICATIONS. AT A MINIMUM, ALL SURFACES SHALL BE PAINTED WITH A TWO-COAT INORGANIC ZINC POLYURETHANE PAINT SYSTEM AS SPECIFIED IN SECTION 708.03, AND HAVE A MINIMUM DRY FILM THICKNESS OF 4.0 MILS. THE PAINT COLOR SHALL BE AS SPECIFIED BY THE OWNER. PRIMER AND PAINT SHALL BE APPLIED IN ACCORDANCE WITH THE MANUFACTURER'S RECOMMENDATIONS.

DESIGN DATA:

AASHTO LRFD 6TH EDITION, 2012 WITH CURRENT INTERIMS
DESIGN METHOD: LOAD AND RESISTANCE FACTOR DESIGN

DESIGN LOADING:

DEAD LOAD:
PANEL SELF WT.

HYDRAULIC LOAD:
MAXIMUM SEATING HEAD = 9'-6"
MAXIMUM UNSEATING HEAD = N/A
STREAM VELOCITY = 14.8 fps

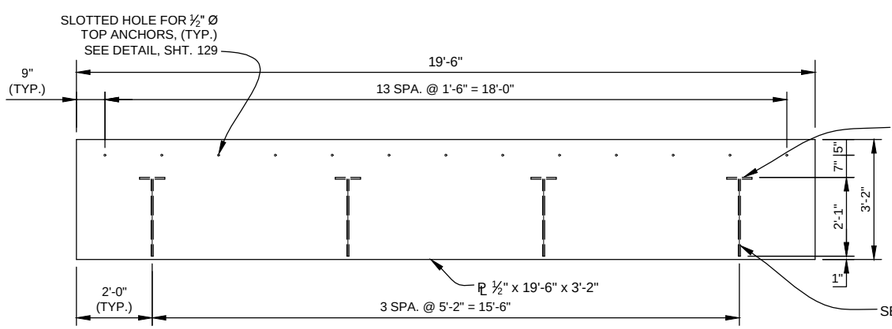

PLATE TYPE 1 DETAIL

(2 TOTAL)

0' 1' 2' 4'
SCALE: 1/4" = 1'-0"

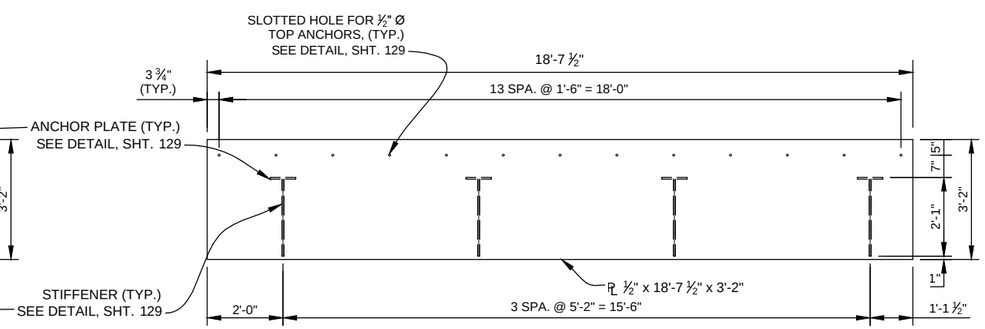

PLATE TYPE 2 DETAIL

(1 TOTAL)

0' 1' 2' 4'
SCALE: 1/4" = 1'-0"

Computer File Information			
Creation Date: 10/15/14	Initials: JHK		
Last Modification Date: 06/18/15	Initials: JHK		
Full Path: P:\11-039.03\CAD			
Drawing File Name: 11-039.03_STR RESTRICTOR PL.dwg			
AutoCAD 2014	Scale: AS SHOWN		

MULLER ENGINEERING CO., INC.
MULLER
CONSULTING ENGINEERS
777 S. WADSWORTH BLVD. 4-100
LAKEWOOD, COLORADO 80226
(303) 988-4939

MEC PROJECT NO. 11039.03

COLORADO LICENSED JONATHON L. KEMP 49227 6/18/15 PROFESSIONAL ENGINEER

Sheet Revisions		
Date:	Comments	Init.

As Constructed
No Revisions:
Revised:
Void:

GREEN GULCH AND FLOOD CONTROL DISTRICT
CO CDOT Region 4 RDM
CITY OF BOULDER

WONDERLAND CREEK - GREENWAYS IMPROVEMENT PROJECT
RESTRICTOR PLATE MODIFICATIONS TO D-16-DD (1 OF 2)

Designer:	KMA	Structure Numbers	
Detailer:	JHK		D-16-DD
Sheet Subset:	DRAINAGE	Subset Sheets:	RP-1

Project No./Code
STM 110-081
18405
Sheet Number: 128

PLOTTED: 6/19/2015 10:44:34 AM
NAME: P:\11-039.03 WONDERLAND CREEK LOWER REACH -FINAL DESIGN\CAD\11-039.03_STR RESTRICTOR PL.DWG

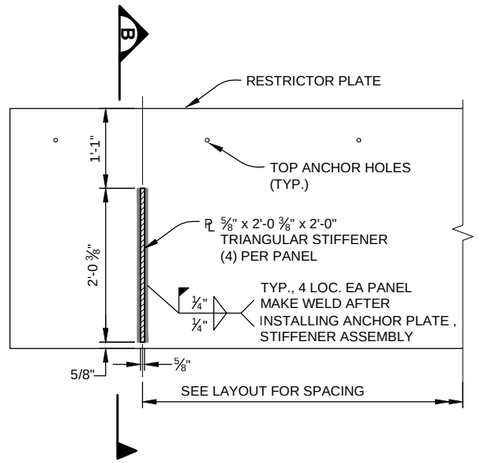

STIFFENER DETAIL

0' 6" 1' 2'
SCALE: 1/2" = 1'-0"

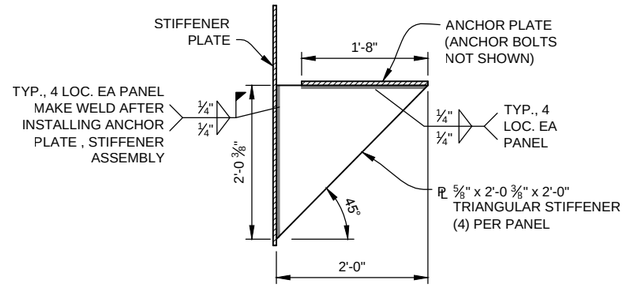

ANCHOR PLATE DETAIL SECTION B

0' 6" 1' 2'
SCALE: 1/2" = 1'-0"

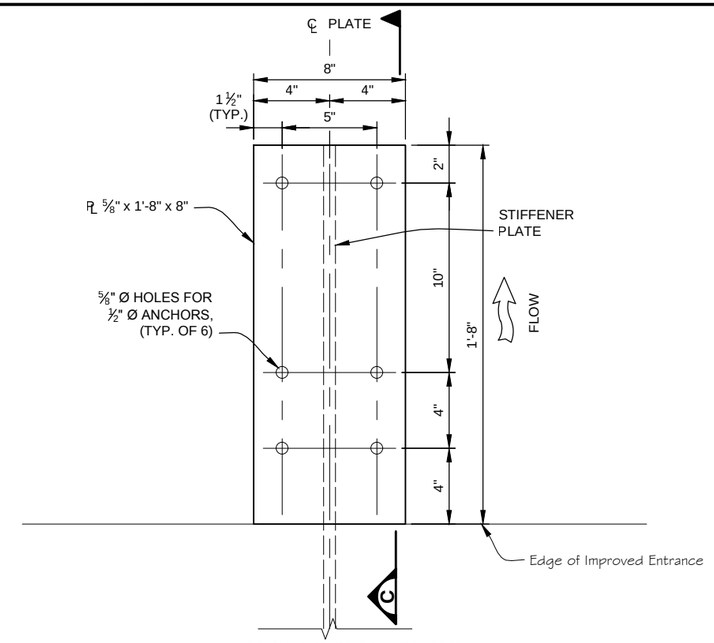

ANCHOR PLATE DETAIL

0' 3" 6" 1'
SCALE: 1-1/2" = 1'-0"

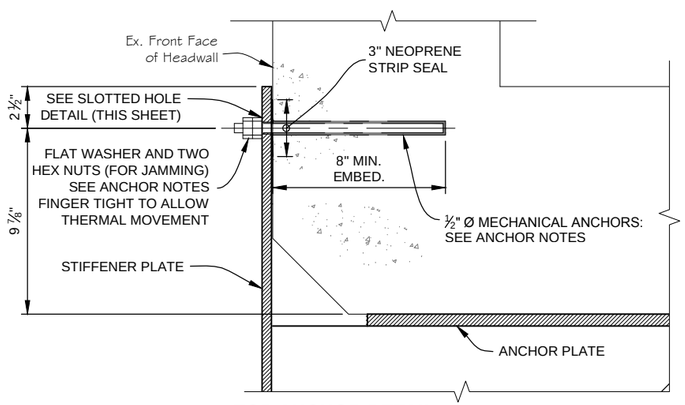

TOP ANCHOR DETAIL

N.T.S.

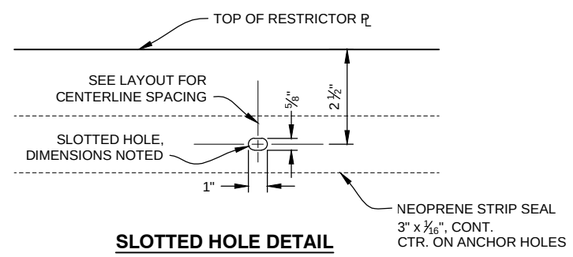

SLOTTED HOLE DETAIL

FOR TOP ANCHORS
N.T.S.

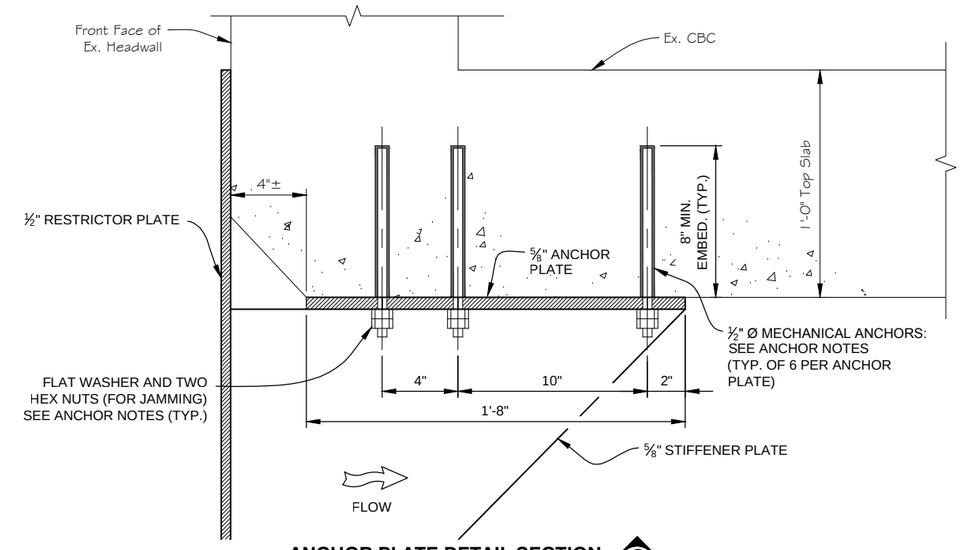

ANCHOR PLATE DETAIL SECTION C

0' 3" 6" 1'
SCALE: 1-1/2" = 1'-0"

ANCHOR BOLT NOTES:

1. OVERHEAD ANCHORS SHALL BE INSTALLED IN ACCORDANCE WITH THE MANUFACTURER'S WRITTEN INSTRUCTIONS FOR OVERHEAD INSTALLATIONS.
2. ANCHORS SHALL BE OF THE TYPE AND DIMENSIONS SPECIFIED IN THE PLANS. ANCHORS SHALL BE INSTALLED IN ACCORDANCE WITH THE MANUFACTURER'S WRITTEN INSTRUCTIONS.
3. MINIMUM ALLOWABLE TENSION FOR MECHANICAL ANCHORS = 6,000 LBS. NUTS SHALL MEET THE REQUIREMENTS OF SAE J995 GRADE 5. FLAT WASHERS SHALL MEET THE REQUIREMENTS OF ASTM F 884, HV. THREADED RODS, NUTS, AND WASHERS SHALL BE SUPPLIED BY THE MANUFACTURER. ALL HARDWARE SHALL BE ZINC PLATED IN ACCORDANCE WITH ASTM B 633 SC 1.
4. THE CONTRACTOR SHALL DRILL ALL HOLES IN THE EXISTING CONCRETE FOR THE MECHANICAL ANCHORS PRIOR TO THE FABRICATION OF STRUCTURAL STEEL ELEMENTS FOR THE RESTRICTOR PLATE. ANY MODIFICATIONS TO THE ANCHOR BOLT LAYOUT DUE TO CONFLICTS WITH EXISTING REINFORCING STEEL SHALL BE SUBMITTED TO THE ENGINEER FOR APPROVAL PRIOR TO THE FABRICATION AND INSTALLATION OF THE RESTRICTOR PLATE.

PLOTTED: 6/19/2015 10:44:42 AM
NAME: P:\11-039.03 WONDERLAND CREEK LOWER REACH -FINAL DESIGN\CAD\11-039.03_STR RESTRICTOR PL.DWG

Computer File Information		
Creation Date: 10/15/14		Initials: JHK
Last Modification Date: 06/18/15		Initials: JHK
Full Path: P:\11-039.03\CAD		
Drawing File Name: 11-039.03_STR RESTRICTOR PL.dwg		
AutoCAD 2014	Scale: AS SHOWN	

MULLER ENGINEERING CO., INC.
MULLER
CONSULTING ENGINEERS
777 S. WADSWORTH BLVD. 4-100
LAKEWOOD, COLORADO 80226
(303) 988-4939
MEC PROJECT NO. 11039.03

COLORADO LICENSED PROFESSIONAL ENGINEER JONATHON L. KEMPA 49227 6/18/15

Sheet Revisions		
Date:	Comments	Init.

As Constructed
No Revisions:
Revised:
Void:

Region 4 RDM
CITY OF BOULDER

WONDERLAND CREEK - GREENWAYS IMPROVEMENT PROJECT
RESTRICTOR PLATE MODIFICATIONS TO D-16-DD (2 OF 2)

Designer:	JLS	Structure Numbers	D-16-DD
Detailer:	JHK		
Sheet Subset:	DRAINAGE	Subset Sheets:	RP-2

Project No./Code
STM 110-081
18405
Sheet Number: 129

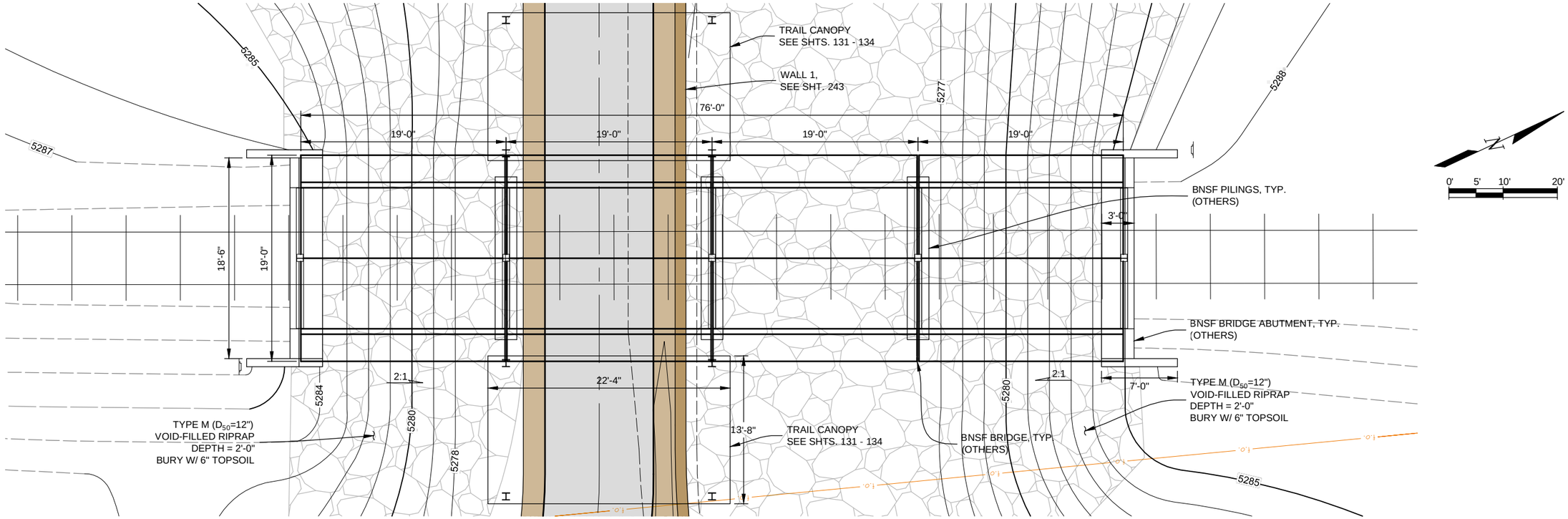

BNSF RAILROAD BRIDGE PLAN

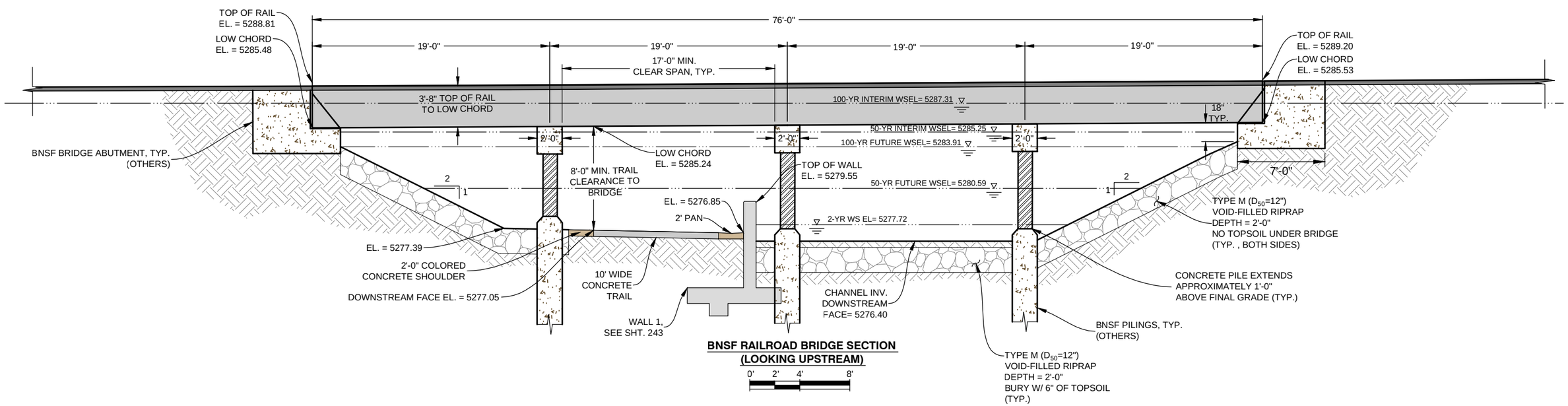

BNSF RAILROAD BRIDGE SECTION
(LOOKING UPSTREAM)

PLOTTED: 6/19/2015 10:45:37 AM
NAME: P:\11-039.03 WONDERLAND CREEK LOWER REACH -FINAL DESIGN\CAD\11-039.03_BNSF BRIDGE P&P.DWG

Computer File Information	
Creation Date: 03/11/15	Initials: JHK
Last Modification Date: 06/18/15	Initials: JHK
Full Path: P:\11-039.03\WONDERLAND\CAD	
Drawing File Name: 11-039.03_BNSF BRIDGE P&P.dwg	
AutoCAD 2010	Scale: AS SHOWN

MULLER ENGINEERING CO., INC.
CONSULTING ENGINEERS
777 S. WADSWORTH BLVD. 4-100
LAKEWOOD, COLORADO 80226
(303) 988-4939
MULLER
MEC PROJECT NO. 11039.03

COLORADO REGISTERED PROFESSIONAL ENGINEER CHRISTOPHER L. KRUEGER 37254 6/18/15

Sheet Revisions		
Date:	Comments	Init.

As Constructed
No Revisions:
Revised:
Void:

Region 4 RDM
CITY OF BOULDER

WONDERLAND CREEK - GREENWAYS IMPROVEMENT PROJECT
BNSF BRIDGE PLAN AND PROFLE

Designer:	JW3	Structure Numbers	0476-31.85
Detailer:	JHK		
Sheet Subset:	DRAINAGE	Subset Sheets:	BNSF-1

Project No./Code
STM 110-081
18405
Sheet Number: 130

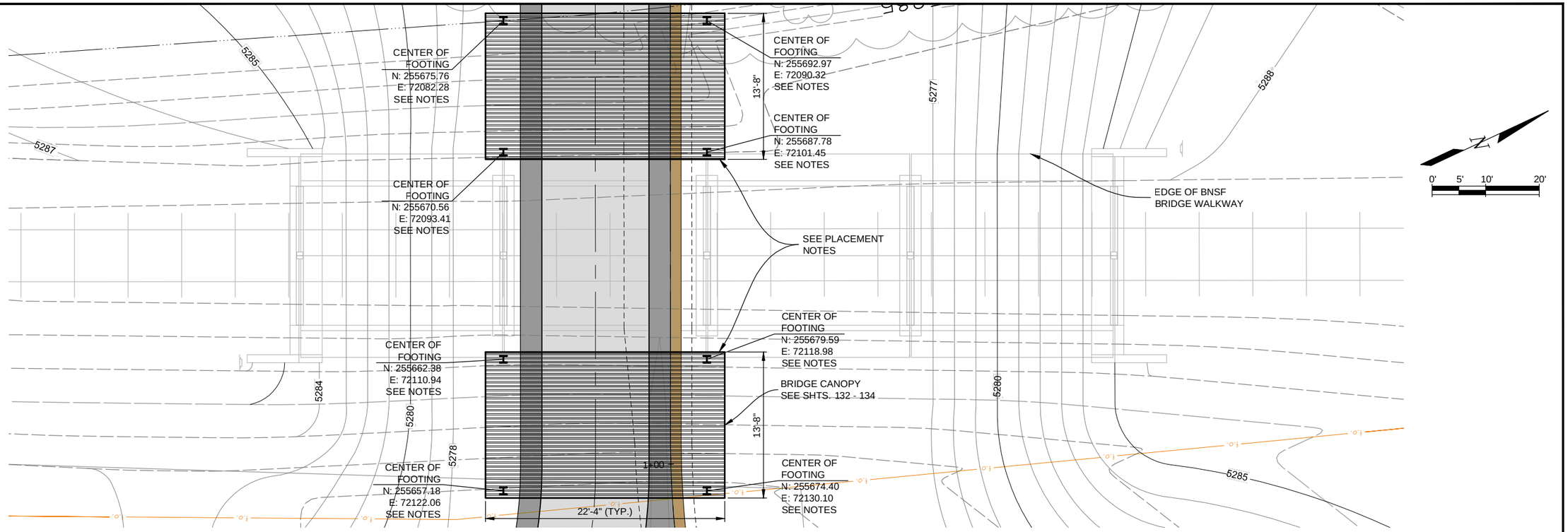

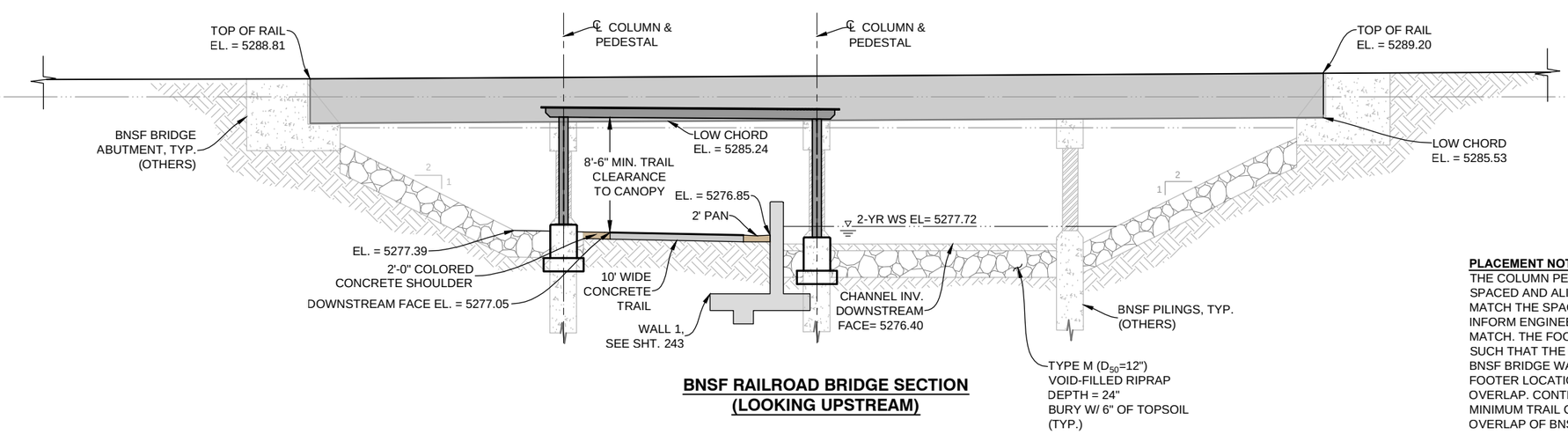

BNSF RAILROAD BRIDGE SECTION (LOOKING UPSTREAM)

PLACEMENT NOTES:
THE COLUMN PEDESTALS AND FOOTINGS HAVE BEEN SPACED AND ALIGNED SUCH THAT THE PEDESTALS MATCH THE SPACING OF THE BNSF BRIDGE PIERS. INFORM ENGINEER IF SPACING OF PIERS DOES NOT MATCH. THE FOOTINGS HAVE ALSO BEEN ALIGNED SUCH THAT THE CANOPY ROOF AND THE EDGE OF THE BNSF BRIDGE WALKWAY OVERLAP BY 6". ADJUST FOOTER LOCATIONS AS NEEDED TO ACHIEVE 6" OVERLAP. CONTRACTOR TO VERIFY THAT A 8'-6" MINIMUM TRAIL CLEARANCE CAN BE ACHIEVED W/ OVERLAP OF BNSF BRIDGE.

Computer File Information		
Creation Date: 03/12/15	Initials: JHK	
Last Modification Date: 06/18/15	Initials: JHK	
Full Path: P:\11-039.03\WONDERLAND\CAD		
Drawing File Name: 11-039.03_BNSF BRIDGE CANOPY.dwg		
AutoCAD 2010	Scale: AS SHOWN	

MULLER ENGINEERING CO., INC.
CONSULTING ENGINEERS
777 S. WADSWORTH BLVD. 4-100
LAKEWOOD, COLORADO 80226
(303) 988-4939
MULLER
MEC PROJECT NO. 11039.03

COLORADO REGISTERED CHRISTOPHER L. KRIEGER 37254 6/18/15 PROFESSIONAL ENGINEER

Sheet Revisions		
Date:	Comments	Init.

As Constructed
No Revisions:
Revised:
Void:

Region 4 RDM
CITY OF BOULDER

WONDERLAND CREEK - GREENWAYS IMPROVEMENT PROJECT
BNSF TRAIL CANOPY PLAN AND PROFILE

Designer:	JW3	Structure Numbers	0476-31.85
Detailer:	JHK		
Sheet Subset:	DRAINAGE	Subset Sheets:	BNSF-2

Project No./Code
STM 110-081
18405
Sheet Number: 131

PLOTTED: 6/19/2015 10:46:35 AM
NAME: P:\11-039.03 WONDERLAND CREEK LOWER REACH -FINAL DESIGN\CAD\11-039.03_BNSF BRIDGE CANOPY.DWG

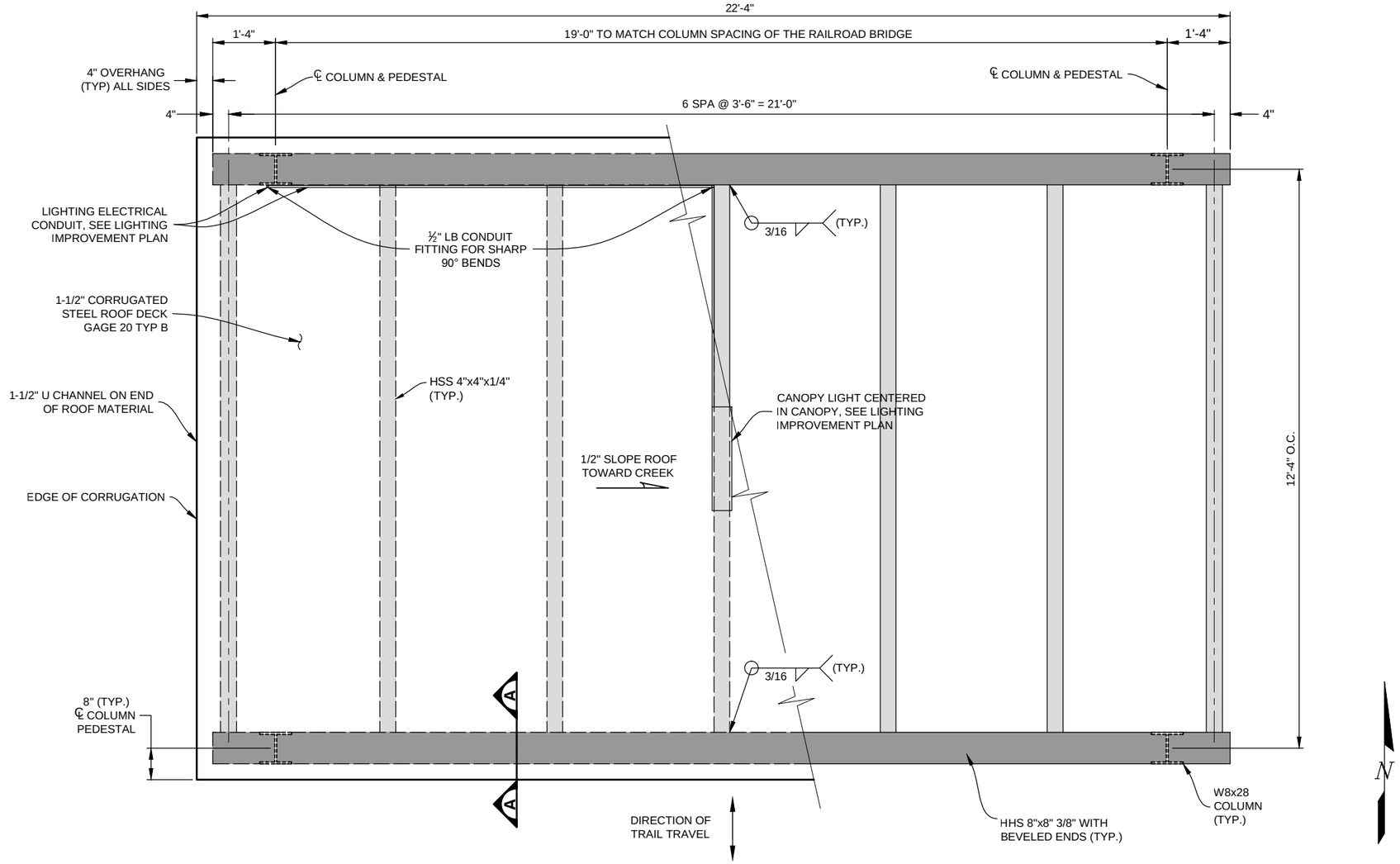

CANOPY PLAN VIEW

0' 6" 1' 2'

SCALE: 3/8" = 1'-0"

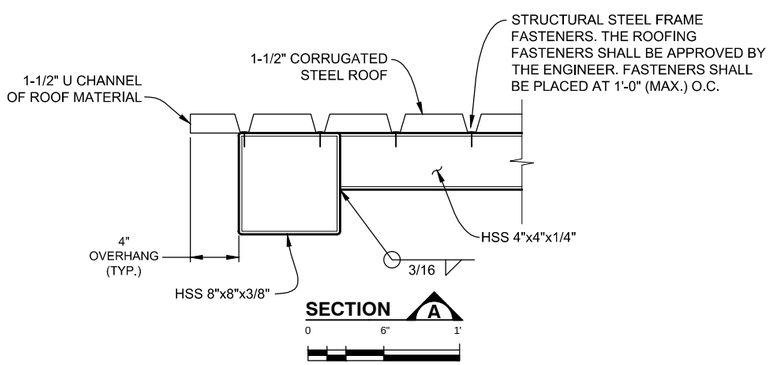

SECTION A

0 6" 1'

SCALE: 2" = 1'-0"

NOTES:

1. ALL STRUCTURAL STEEL SHALL BE WEATHERING STEEL AND SHALL MEET THE REQUIREMENT OF ASTM A 588 GRADE 50 KSI.
2. ALL STEEL TUBING SHALL BE WEATHERING STEEL AND SHALL MEET THE REQUIREMENT OF ASTM A 847 GRADE 50 KSI.
3. PRIOR TO FABRICATION, CONTRACTOR TO SUBMIT SHOP DRAWING TO THE ENGINEER FOR REVIEW AND APPROVAL.
4. FOR ELEVATION LOOKING WEST, AND BASE PLATE SEE SHT. 133.
5. FOR ELEVATION LOOKING NORTH AND PEDESTAL DETAIL, SEE SHT. 134.
6. CORRUGATED STEEL ROOF DECK AND U CHANNEL TO BE GALVANIZED STEEL.

DESIGN DATA:

STEEL CONSTRUCTION MANUAL 9th EDITION
STEEL DECK INSTITUTE (SDI)
DESIGN METHOD: ALLOWABLE STRESS DESIGN

DEAD LOAD:	ASSUME 2.0 LBS PER SQ. FT FOR STEEL ROOF DECKING
	ASSUME 20.0 LBS PER SQ. FT. FOR 2" OF BALLAST
LIVE LOAD:	CONCENTRATED LOAD = 200 LBS.
	WIND LOAD = 40 LBS. PER SQ. FT
	SNOW LOAD = 45 LBS. PER SQ. FT
REINFORCED CONCRETE:	
	CLASS D CONCRETE: F'C = 4,500 psi
	REINFORCING STEEL FY = 60,000 psi
STRUCTURAL STEEL:	
	ASTM A588 GRADE 50 FY = 50,000 psi
	ASTM A847 GRADE 50 FY = 50,000 psi

Computer File Information		
Creation Date: 03/12/15	Initials: JHK	
Last Modification Date: 06/18/15	Initials: JHK	
Full Path: P:\11-039.03\WONDERLAND\CAD		
Drawing File Name: 11-039.03_BNSF BRIDGE CANOPY.dwg		
AutoCAD 2010	Scale: AS SHOWN	

MULLER ENGINEERING CO., INC.
CONSULTING ENGINEERS
777 S. WADSWORTH BLVD. 4-100
LAKEWOOD, COLORADO 80226
(303) 988-4939
MULLER
MEC PROJECT NO. 11039.03

REGISTERED PROFESSIONAL ENGINEER 32038 6-18-15

Sheet Revisions		
Date:	Comments	Init.

As Constructed
No Revisions:
Revised:
Void:

Region 4 RDM

CITY OF BOULDER

WONDERLAND CREEK - GREENWAYS IMPROVEMENT PROJECT

BNSF TRAIL CANOPY DETAILS (1 OF 3)

Designer:	KMA	Structure Numbers	0476-31.85
Detailer:	JHK		
Sheet Subset:	DRAINAGE	Subset Sheets:	BNSF-3

Project No./Code
STM 110-081
18405
Sheet Number: 132

PLOTTED: 6/19/2015 10:46:43 AM
NAME: P:\11-039.03 WONDERLAND CREEK LOWER REACH -FINAL DESIGN\CAD\11-039.03_BNSF BRIDGE CANOPY.DWG

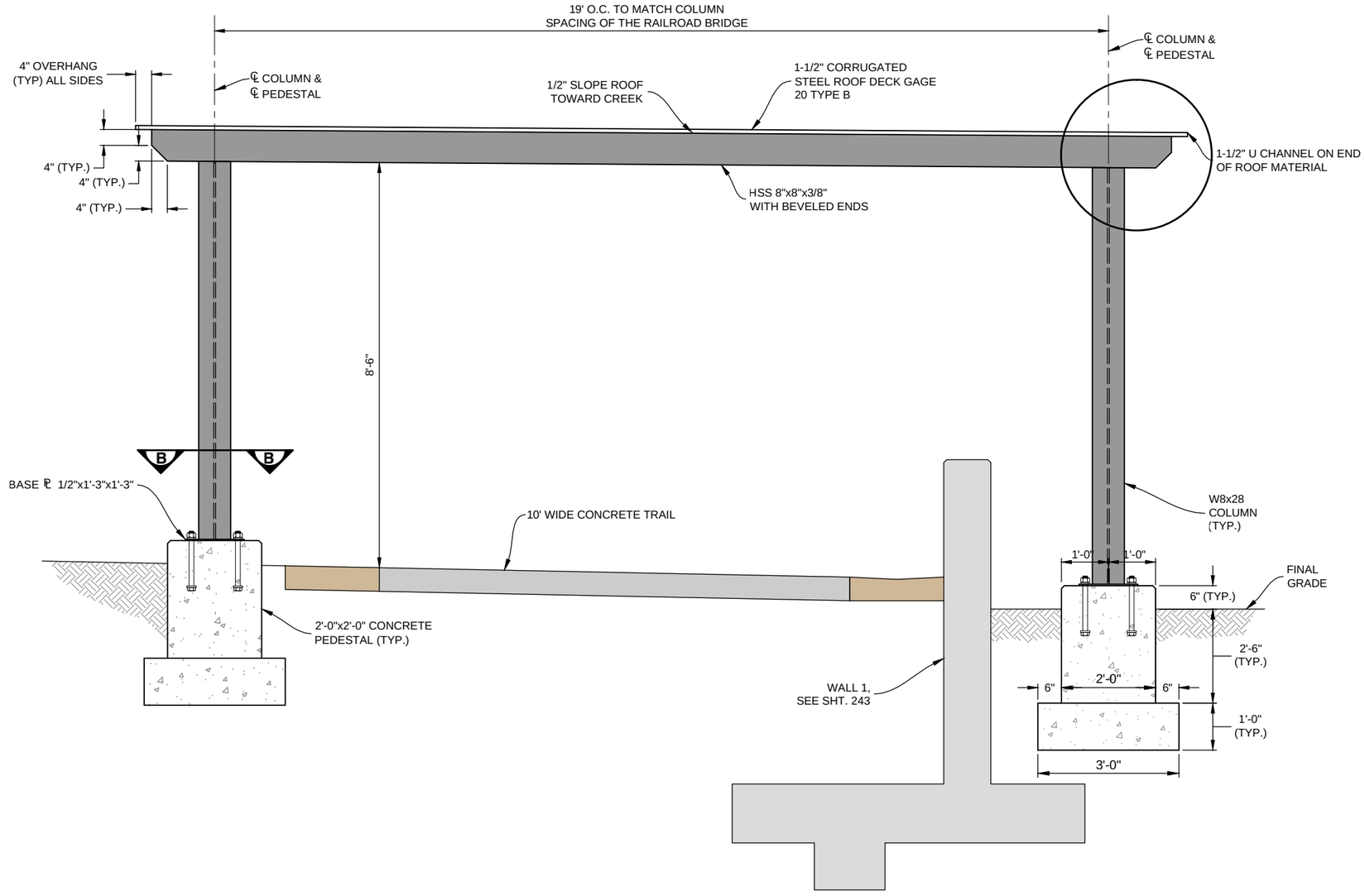

ELEVATION LOOKING WEST

0' 6" 1' 2'

SCALE: 3/8" = 1'-0"

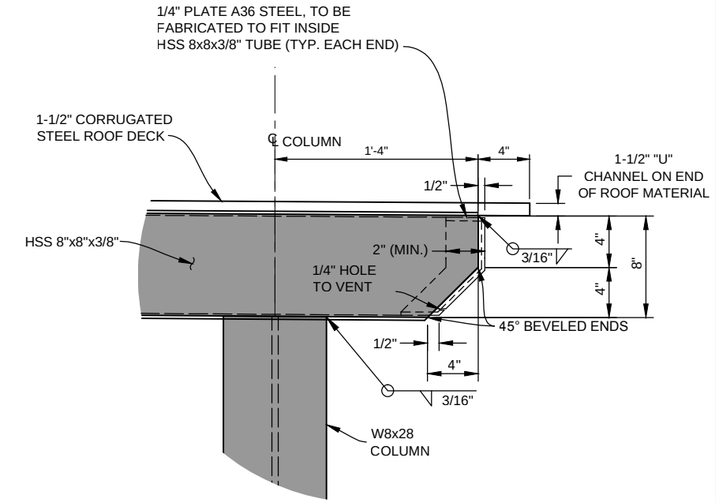

STEEL TUBE W/BEVELED END DETAIL

SCALE: 1/2"=1'-0"

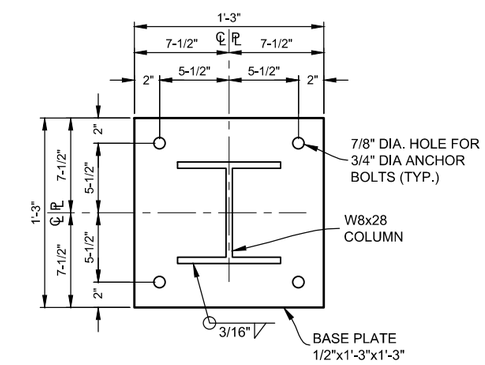

SECTION B

0' 6" 1' 2'

SCALE: 1/2" = 1'-0"

NOTES:

1. FOR PEDESTAL DETAIL SEE SHT. 134

Computer File Information		
Creation Date: 03/12/15	Initials: JHK	
Last Modification Date: 06/18/15	Initials: JHK	
Full Path: P:\11-039.03\WONDERLAND\CAD		
Drawing File Name: 11-039.03_BNSF BRIDGE CANOPY.dwg		
AutoCAD 2010	Scale: AS SHOWN	

MULLER ENGINEERING CO., INC.
CONSULTING ENGINEERS
777 S. WADSWORTH BLVD. 4-100
LAKEWOOD, COLORADO 80226
(303) 988-4939

MEC PROJECT NO. 11039.03

COLORADO REGISTERED PROFESSIONAL ENGINEER 32038 6-18-15

Sheet Revisions		
Date:	Comments	Init.

As Constructed

No Revisions:

Revised:

Void:

Region 4 RDM

CITY OF BOULDER

WONDERLAND CREEK - GREENWAYS IMPROVEMENT PROJECT

BNSF TRAIL CANOPY DETAILS (2 OF 3)

Designer:	KMA	Structure Numbers	0476-31.85
Detailer:	JHK		
Sheet Subset:	DRAINAGE	Subset Sheets:	BNSF-4

Project No./Code

STM 110-081

18405

Sheet Number: 133

PLOTTED: 6/19/2015 10:46:51 AM
NAME: P:\11-039.03 WONDERLAND CREEK LOWER REACH -FINAL DESIGN\CAD\11-039.03_BNSF BRIDGE CANOPY.DWG

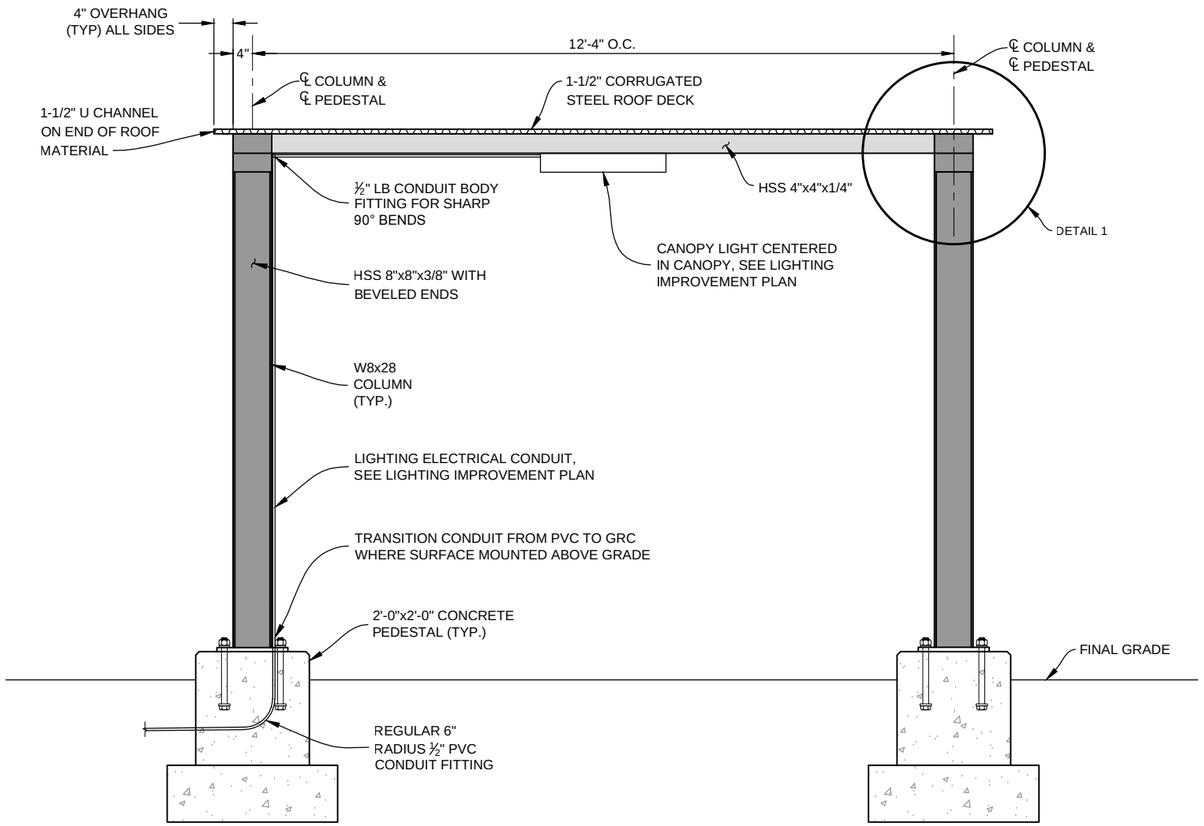

ELEVATION LOOKING NORTH

0' 6" 1' 2'
SCALE: 3/8" = 1'-0"

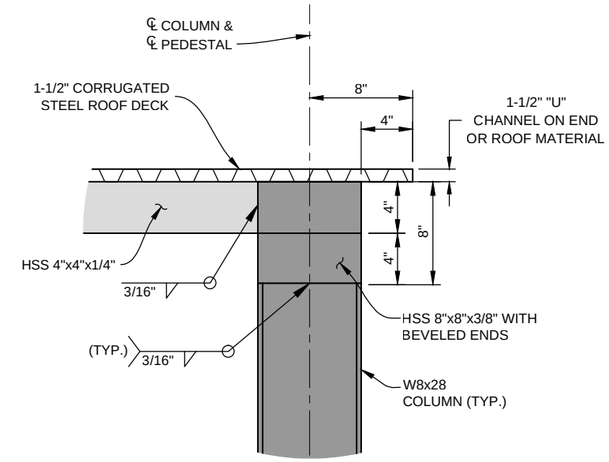

DETAIL 1

0' 3" 6" 1'
SCALE: 1" = 1'-0"

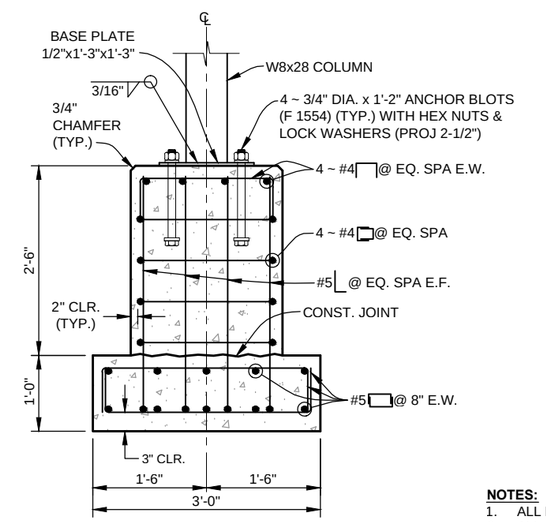

CONCRETE PEDESTAL DETAIL

0' 6" 1' 2'
SCALE: 1/2" = 1'-0"

NOTES:

1. ALL PEDESTAL CONCRETE SHALL BE CDOT CLASS D.
2. ALL REINFORCING STEEL SHALL BE EPOXY COATED GRADE 60 KSI.

PLOTTED: 6/19/2015 10:46:59 AM
NAME: P:\11-039.03 WONDERLAND CREEK LOWER REACH -FINAL DESIGN\CAD\11-039.03_BNSF BRIDGE CANOPY.DWG

Computer File Information		
Creation Date: 03/12/15	Initials: JHK	
Last Modification Date: 06/18/15	Initials: JHK	
Full Path: P:\11-039.03\WONDERLAND\CAD		
Drawing File Name: 11-039.03_BNSF BRIDGE CANOPY.dwg		
AutoCAD 2010	Scale: AS SHOWN	

MULLER ENGINEERING CO., INC.
MULLER
CONSULTING ENGINEERS
777 S. WADSWORTH BLVD. 4-100
LAKEWOOD, COLORADO 80226
(303) 988-4939
MEC PROJECT NO. 11039.03

REGISTERED 32038 6-18-15 PROFESSIONAL ENGINEER

Sheet Revisions		
Date:	Comments	Init.

As Constructed
No Revisions:
Revised:
Void:

Region 4 RDM

CITY OF BOULDER

WONDERLAND CREEK - GREENWAYS IMPROVEMENT PROJECT

BNSF TRAIL CANOPY DETAILS (3 OF 3)

Designer:	KMA	Structure Numbers	0476-31.85
Detailer:	JHK		
Sheet Subset:	DRAINAGE	Subset Sheets:	BNSF-5

Project No./Code
STM 110-081
18405
Sheet Number: 134

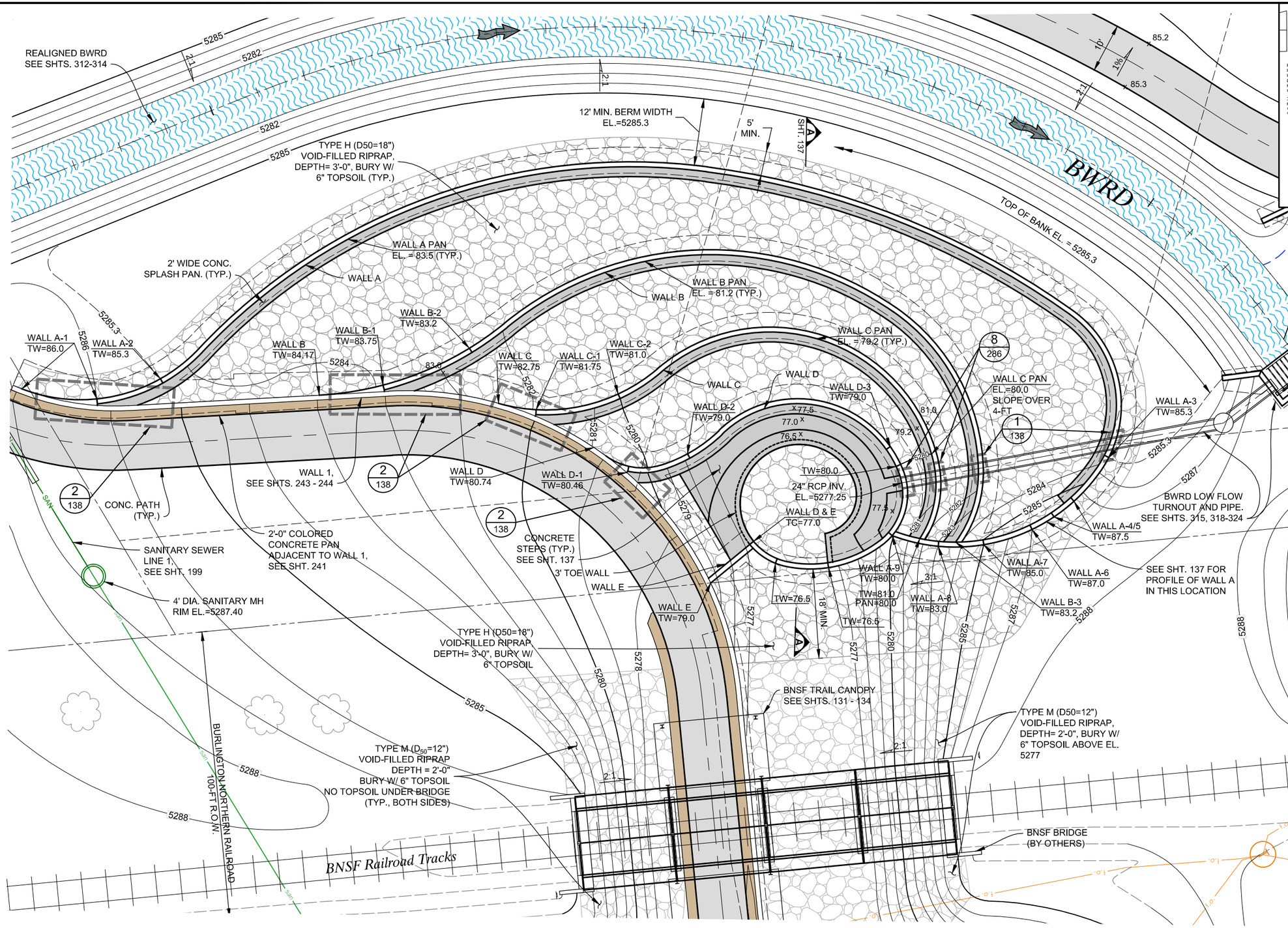

NOTES:

1. SEE SHEET 136 FOR ALIGNMENT INFORMATION FOR SPILLWAY WALLS A, B, C, D AND E.
2. ALIGNMENTS ARE ALONG THE FRONT FACE (DOWNSTREAM) SIDE OF WALLS.

TOP OF WALL ELEVATION TABLE

WALL A		
#	STA.	TW
1	0+00	5286.00
2	0+14	5285.30
3	2+48.60	5285.30
4	2+59.60	5287.50
5	2+64.60	5287.50
6	2+69.60	5287.00
7	2+79.60	5285.00
8	2+88.60	5283.00
9	2+97.60	5280.00
WALL B		
#	STA.	TW
1	0+00	5283.75*
2	0+19.4	5283.20
3	1+65.51	5283.20
WALL C		
#	STA.	TW
1	0+00	5281.75*
2	0+17.55	5281.00
3	1+13.30	5281.00
WALL D		
#	STA.	TW
1	0+00	5280.46*
2	0+13.16	5279.00
3	0+59.18	5279.00
4	0+63.18	5280.00
5	0+77.47	5280.00
6	0+91.47	5276.50
7	1+01.85	5276.50
8	1+07.85	5277.00
9	1+07.85	5276.50
10	1+62.88	5276.50
11	1+68.85	5276.50
WALL E		
#	STA.	TW
1	0+00	5279.00
2	0+11.10	5277.00

* DENOTES POINTS WALL B, C, AND D ARE 9" (COLORED CAP THICKNESS) BELOW THE ELEVATION OF WALL 1

Computer File Information	
Creation Date: 07/18/13	Initials: JHK
Last Modification Date: 06/18/15	Initials: JHK
Full Path: P:\11-039.03\CAD	
Drawing File Name: 11-039.03_WC SPILLWAY PLAN.dwg	
AutoCAD 2014	Scale: AS SHOWN

MULLER ENGINEERING CO., INC.
CONSULTING ENGINEERS
777 S. WADSWORTH BLVD. 4-100
LAKEWOOD, COLORADO 80226
(303) 988-4939
MULLER
MEC PROJECT NO. 11039.03

COLORADO REGISTERED PROFESSIONAL ENGINEER CHRISTOPHER L. KRAEBER 37254 6/18/15

Sheet Revisions		
Date:	Comments	Init.

As Constructed
No Revisions:
Revised:
Void:

Region 4 RDM
CITY OF BOULDER

WONDERLAND CREEK - GREENWAYS IMPROVEMENT PROJECT
WONDERLAND CREEK SPILLWAY PLAN

Designer:	JW3	Structure Numbers	
Detailer:	NJM		
Sheet Subset:	DRAINAGE	Subset Sheets:	SP-1

Project No./Code
STM 110-081
18405
Sheet Number: 135

PLOTTED: 6/19/2015 10:48:11 AM
NAME: P:\11-039.03 WONDERLAND CREEK LOWER REACH -FINAL DESIGN\CAD\11-039.03_WC SPILLWAY PLAN.DWG

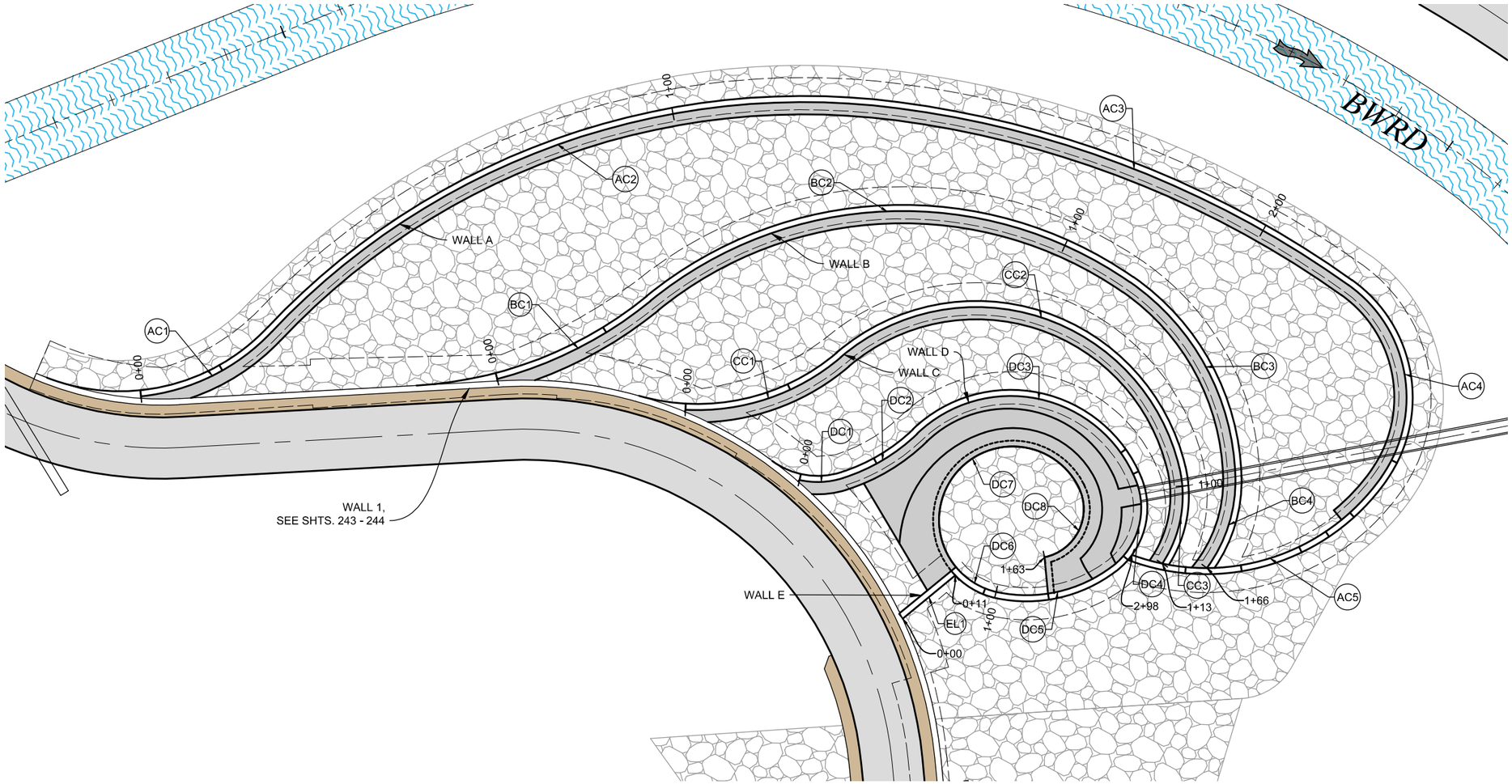

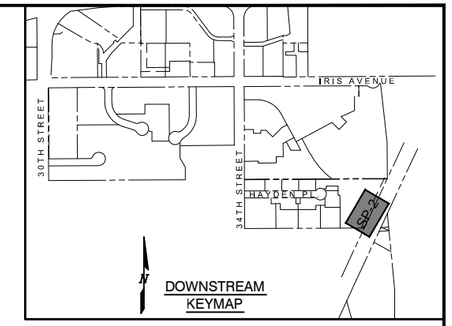

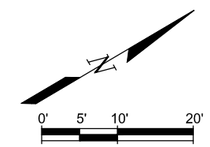

SPILLWAY WALLS HORIZONTAL CONTROL TABLE

CURVE #	RADIUS	LENGTH	CHORD DIRECTION	START STATION	START NORTHING	START EASTING	END STATION	END NORTHING	END EASTING
AC1	34.00	24.30	N04° 14' 19.00"E	0+00.00	255610.40	71967.93	0+24.30	255634.12	71969.69
AC2	119.00	112.49	N10° 50' 41.22"E	0+24.30	255634.12	71969.69	1+36.79	255740.54	71990.08
AC3	163.00	79.80	N51° 57' 02.64"E	1+36.79	255740.54	71990.08	2+16.59	255789.23	72052.29
AC4	22.50	35.22	S69° 10' 32.48"E	2+16.59	255789.23	72052.29	2+51.81	255777.95	72081.96
AC5	35.00	45.79	S13° 09' 02.81"W	2+51.81	255777.95	72081.96	2+97.60	255736.47	72072.27
BC1	66.00	28.27	N03° 32' 56.02"E	0+00.00	255661.87	71994.98	0+28.27	255689.87	71996.72
BC2	65.00	83.91	N28° 15' 40.85"E	0+28.27	255689.87	71996.72	1+12.18	255758.75	72033.75
BC3	40.00	37.48	S87° 54' 55.37"E	1+12.18	255758.75	72033.75	1+49.66	255757.44	72069.85
BC4	24.00	15.86	S42° 08' 55.74"E	1+49.66	255757.44	72069.85	1+65.51	255745.89	72080.29
CC1	36.00	27.42	N11° 49' 16.43"E	0+00.00	255685.77	72014.89	0+27.42	255711.96	72020.37
CC2	34.00	69.59	N48° 38' 16.38"E	0+27.42	255711.96	72020.37	0+97.00	255750.33	72063.95

SPILLWAY WALLS HORIZONTAL CONTROL TABLE

CURVE #	RADIUS	LENGTH	CHORD DIRECTION	START STATION	START NORTHING	START EASTING	END STATION	END NORTHING	END EASTING
CC3	20.00	16.30	S49° 23' 12.44"E	0+97.00	255750.33	72063.95	1+13.30	255740.01	72075.98
DC1	13.50	7.15	N28° 07' 24.86"E	0+00.00	255695.98	72034.20	0+07.15	255702.21	72037.53
DC2	31.00	14.25	N00° 12' 42.61"W	0+07.15	255702.21	72037.53	0+21.39	255716.33	72037.48
DC3	22.00	42.90	N42° 29' 27.42"E	0+21.39	255716.33	72037.48	0+64.30	255743.19	72062.08
DC4	12.00	15.68	S44° 12' 17.37"E	0+64.30	255743.19	72062.08	0+79.98	255732.73	72072.25
DC5	23.01	19.78	S17° 51' 16.47"W	0+79.98	255732.73	72072.25	0+99.76	255714.48	72066.37
DC6	11.99	8.09	S61° 48' 23.06"W	0+99.76	255714.48	72066.37	1+07.85	255710.73	72059.37
DC7	12.00	40.34	N02° 34' 24.05"W	1+07.85	255710.73	72059.37	1+48.19	255734.56	72058.30
DC8	8.00	14.70	S33° 38' 17.95"E	1+48.19	255734.56	72058.30	1+62.88	255723.97	72065.35
EL1	N/A	11.10	N/A	0+00.00	255698.96	72062.22	0+11.10	255709.93	72060.51

Computer File Information

Creation Date: 03/04/15 Initials: JHK
Last Modification Date: 06/18/15 Initials: JHK
Full Path: P:\11-039.03\CAD
Drawing File Name: 11-039.03_WC SPILLWAY WALL LAYOUT.dwg
AutoCAD 2014 Scale: AS SHOWN FEET

MULLER ENGINEERING CO., INC.
CONSULTING ENGINEERS
777 S. WADSWORTH BLVD. 4-100
LAKEWOOD, COLORADO 80226
(303) 988-4939
MULLER
MEC PROJECT NO. 11039.03

COLORADO REGISTERED PROFESSIONAL ENGINEER CHRISTOPHER L. KRAMER 37254 6/18/15

Sheet Revisions

Date:	Comments	Init.

As Constructed

No Revisions:
Revised:
Void:

Region 4 RDM

CITY OF BOULDER

WONDERLAND CREEK - GREENWAYS IMPROVEMENT PROJECT

SPILLWAY WALL LAYOUT

Designer: JW3 Structure Numbers
Detailer: JHK
Sheet Subset: DRAINAGE Subset Sheets: SP-2

Project No./Code
STM 110-081
18405
Sheet Number: 136

PLOTTED: 6/19/2015 10:49:05 AM
NAME: P:\11-039.03 WONDERLAND CREEK - LOWER REACH - FINAL DESIGN\CAD\11-039.03_WC SPILLWAY WALL LAYOUT.DWG

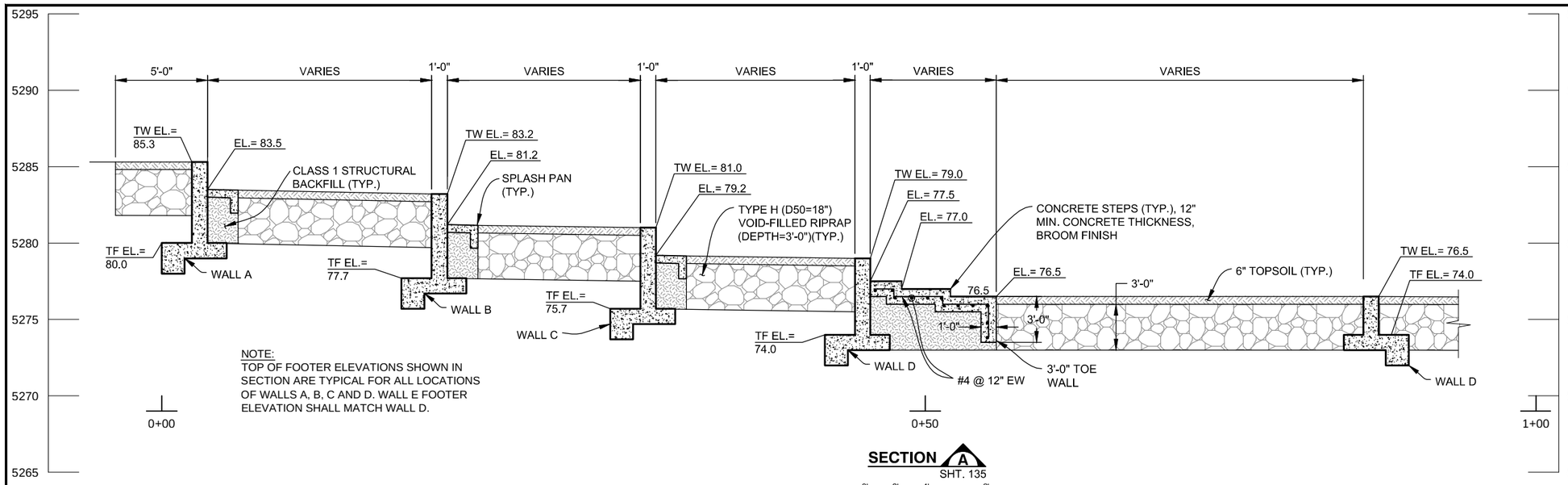

NOTE:
TOP OF FOOTER ELEVATIONS SHOWN IN SECTION ARE TYPICAL FOR ALL LOCATIONS OF WALLS A, B, C AND D. WALL E FOOTER ELEVATION SHALL MATCH WALL D.

SECTION A
SHT. 135

0' 2' 4' 8'
SCALE: 1/8" = 1'-0"

SPILLWAY STEPS CONTROL TABLE

DESIGN POINT	NORTHING	EASTING
DP 1	255704.70	72040.02
DP 2	255709.39	72040.32
DP 3	255717.00	72039.37
DP 4	255733.84	72043.37
DP 5	255740.02	72061.85
DP 6	255738.90	72064.73
DP 7	255736.66	72067.87
DP 8	255733.64	72070.28
DP 9	255733.50	72072.13
DP 10	255704.74	72051.47
DP 11	255713.96	72043.87
DP 12	255725.86	72042.89
DP 13	255734.59	72048.53
DP 14	255737.55	72058.50
DP 15	255734.92	72064.95
DP 16	255728.94	72068.52
DP 17	255728.96	72072.39
DP 18	255704.78	72060.30
DP 19	255710.73	72059.37
DP 20	255722.05	72045.53
DP 21	255734.56	72058.30
DP 22	255731.01	72064.44
DP 23	255723.97	72065.35
DP 24	255721.46	72070.76

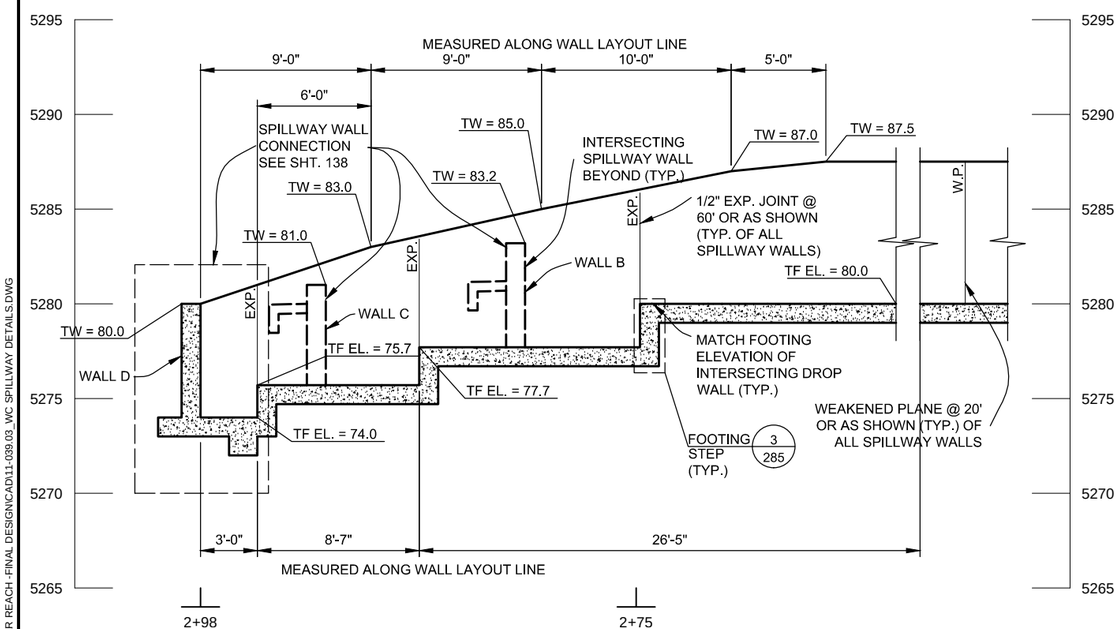

WALL A PROFILE

0' 2' 4' 8'
SCALE: 1/8" = 1'-0"

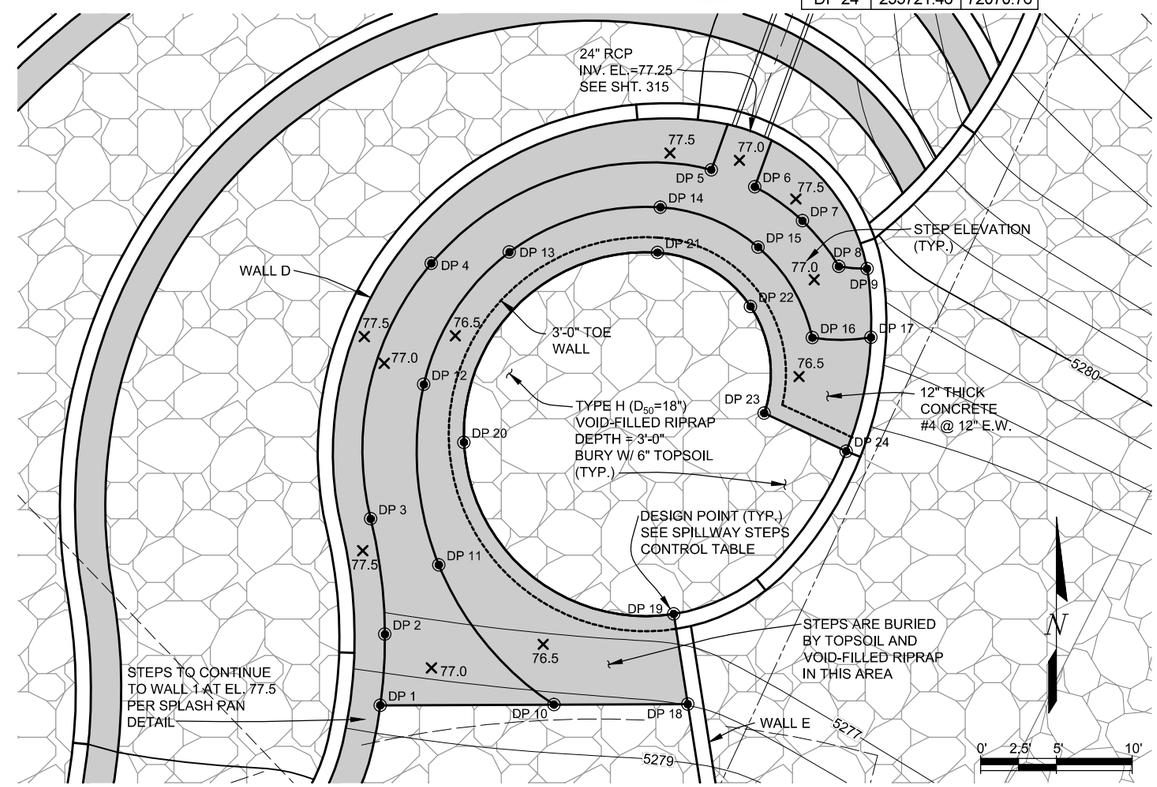

SPILLWAY CONCRETE STEPS PLAN

PLOTTED: 6/19/2015 10:49:52 AM
NAME: P:\11-039.03 WONDERLAND CREEK - LOWER REACH - FINAL DESIGN\CAD\11-039.03_WC SPILLWAY DETAILS.DWG

Computer File Information		
Creation Date: 10/13/14	Initials: JHK	
Last Modification Date: 06/18/15	Initials: JHK	
Full Path: P:\11-039.03\CAD		
Drawing File Name: 11-039.03_WC SPILLWAY DETAILS.dwg		
AutoCAD 2014	Scale: AS SHOWN	FEET

MULLER ENGINEERING CO., INC.
CONSULTING ENGINEERS
777 S. WADSWORTH BLVD. 4-100
LAKEWOOD, COLORADO 80226
(303) 988-4939
MULLER
MEC PROJECT NO. 11039.03

COLORADO REGISTERED PROFESSIONAL ENGINEER 37254 6/18/15

Sheet Revisions		
Date:	Comments	Init.

As Constructed
No Revisions:
Revised:
Void:

Region 4 RDM
CITY OF BOULDER

WONDERLAND CREEK - GREENWAYS IMPROVEMENT PROJECT
SPILLWAY DETAILS

Designer:	JW3	Structure Numbers	
Detailer:	JHK		
Sheet Subset:	DRAINAGE	Subset Sheets:	SP-3

Project No./Code
STM 110-081
18405
Sheet Number: 137

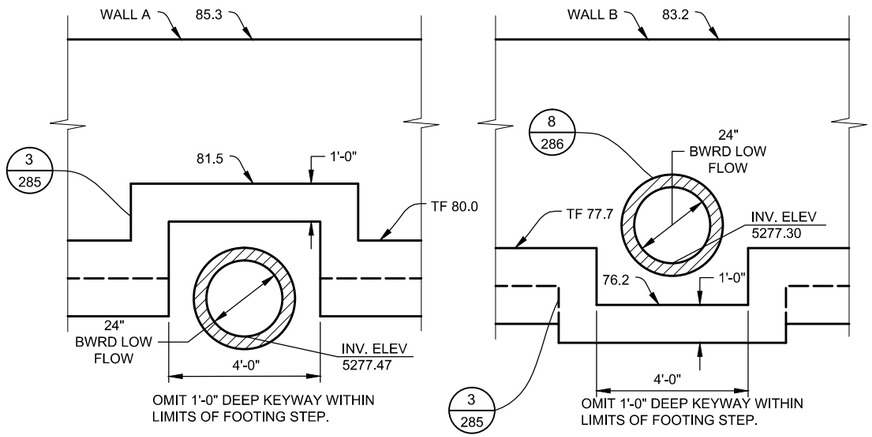

STEP AT PIPE DETAIL

1
135, 315

0' 6" 1' 2'
SCALE: 1/2" = 1'-0"

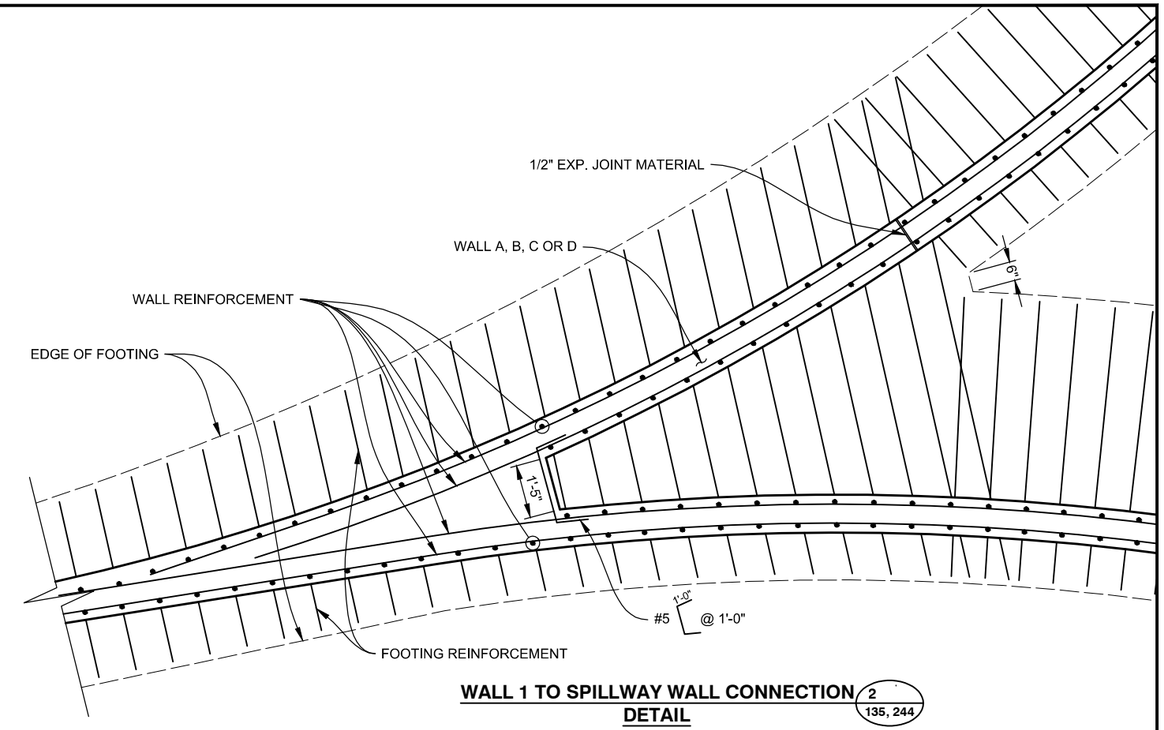

WALL 1 TO SPILLWAY WALL CONNECTION DETAIL

2
135, 244

0' 1' 2' 4'
SCALE: 1/4" = 1'-0"

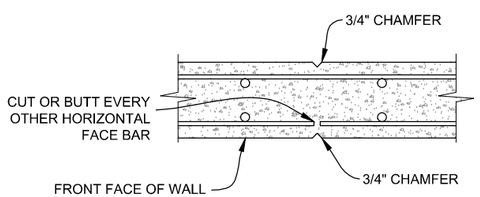

WEAKENED PLANE (20' MAX. SPACING)

0' 6" 1' 2'
SCALE: 1/2" = 1'-0"

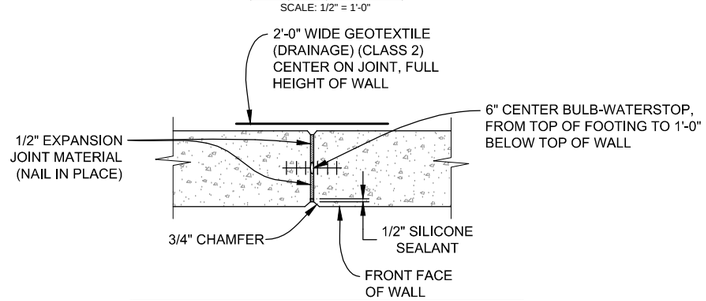

1/2" EXPANSION JOINT (60' MAX. SPACING)

0' 6" 1' 2'
SCALE: 1/2" = 1'-0"

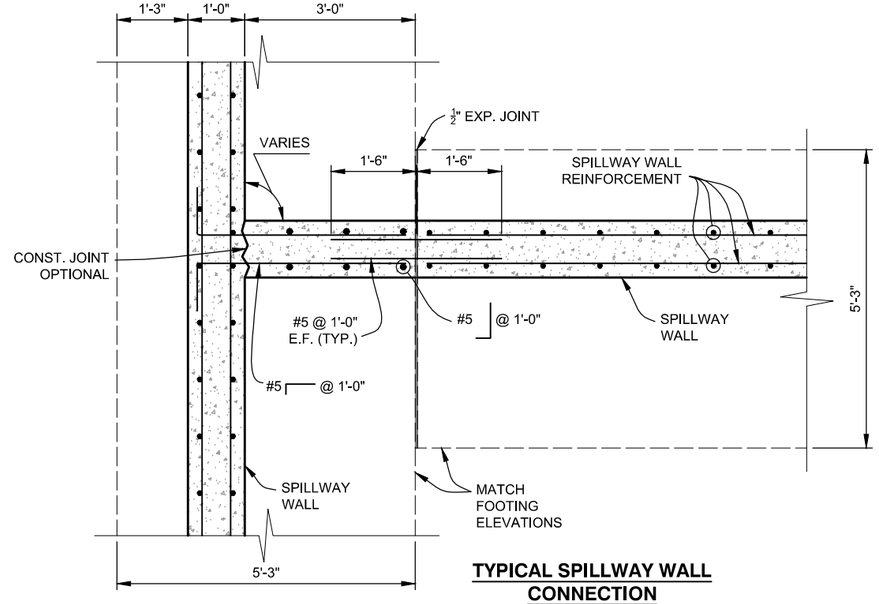

TYPICAL SPILLWAY WALL CONNECTION

0' 6" 1' 2'
SCALE: 3/8" = 1'-0"

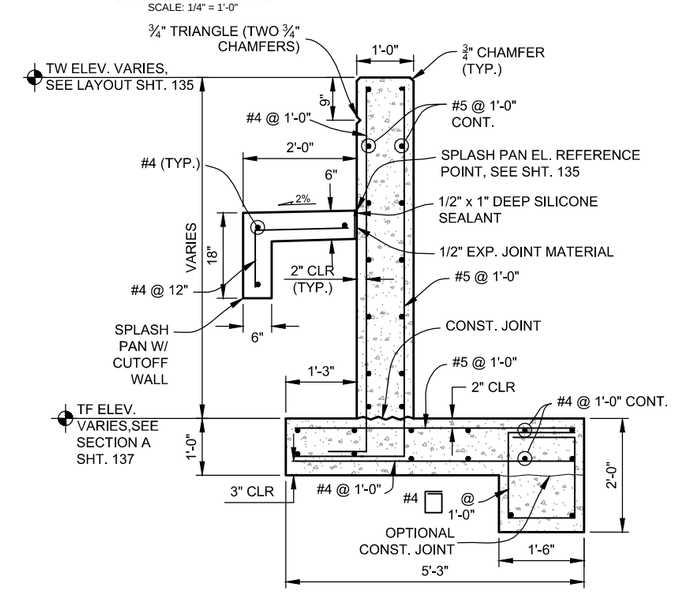

SPILLWAY WALL TYPICAL SECTION

0' 6" 1' 2'
SCALE: 3/8" = 1'-0"

Computer File Information		
Creation Date: 10/13/14	Initials: JHK	
Last Modification Date: 06/18/15	Initials: JHK	
Full Path: P:\11-039.03\CAD		
Drawing File Name: 11-039.03_WC SPILLWAY DETAILS.dwg		
AutoCAD 2014	Scale: AS SHOWN	FEET

MULLER ENGINEERING CO., INC.
MULLER
CONSULTING ENGINEERS
777 S. WADSWORTH BLVD. 4-100
LAKEWOOD, COLORADO 80226
(303) 988-4939
MEC PROJECT NO. 11039.03

COLORADO LICENSED
JONATHON L. HEIN
49227
6/18/15
PROFESSIONAL ENGINEER

Sheet Revisions		
Date:	Comments	Init.

As Constructed
No Revisions:
Revised:
Void:

Region 4 RDM
CITY OF BOULDER

WONDERLAND CREEK - GREENWAYS IMPROVEMENT PROJECT
SPILLWAY DETAILS

Designer:	KMA	Structure Numbers	
Detailer:	JHK		
Sheet Subset:	DRAINAGE	Subset Sheets:	SP-4

Project No./Code
STM 110-081
18405
Sheet Number: 138

PLOTTED: 6/19/2015 10:50:10 AM
NAME: P:\11-039.03 WONDERLAND CREEK LOWER REACH -FINAL DESIGN\CAD\11-039.03_WC SPILLWAY DETAILS.DWG

STRUCTURE GENERAL NOTES

1. ALL WORK SHALL BE DONE IN ACCORDANCE WITH THE COLORADO DEPARTMENT OF TRANSPORTATION (CDOT) STANDARD SPECIFICATIONS FOR ROAD AND BRIDGE CONSTRUCTION, 2011 EDITION, AS APPLICABLE TO THE PROJECT.
2. STRUCTURE EXCAVATION AND BACKFILL SHALL BE IN ACCORDANCE WITH CDOT STANDARD PLANS, M&S STANDARDS M-206-1, UNLESS OTHERWISE NOTED ON PLANS.
3. STRUCTURE BACKFILL FOR THE BOX CULVERT SHALL CONFORM TO STRUCTURE BACKFILL (CLASS 1) SPECIFICATIONS, AND SHALL BE PLACED IN ACCORDANCE WITH CDOT SPECIFICATIONS, SECTION 206.
4. THE SOILS AND FOUNDATION INVESTIGATION FOR THE CONCRETE BOX CULVERT WAS PERFORMED BY CTL THOMPSON, INC. THE SUB SURFACE CONDITIONS AND RECOMMENDATIONS FOR THE STRUCTURE ARE CONTAINED IN A REPORT DATED JULY 3, 2013, PROJ NO. DN46,599-125. REFER TO THE PROJECT SPECIFICATIONS FOR COPIES OF THESE REPORTS.
5. THE BOTTOM SLAB OF THE BOX CULVERT SHALL NOT BE PLACED UNTIL SUBGRADE IS OBSERVED AND APPROVED IN WRITING BY THE ENGINEER.
6. EXPANSION JOINT MATERIAL SHALL MEET AASHTO SPECIFICATION M-213.
7. THE COST FOR EXPANSION JOINT MATERIAL SHALL NOT BE PAID FOR SEPARATELY BUT SHALL BE INCLUDED IN THE WORK.
8. WATER STOPS SHALL MEET THE REQUIREMENTS OF CDOT SPECIFICATIONS, SECTION 518.
9. STRUCTURAL CONCRETE EXPOSED TO SOIL SHALL CONFORM TO CEMENTITIOUS MATERIALS REQUIREMENTS CLASS 0 CORRESPONDING TO SULFATE EXPOSURE CLASS 0.
10. ALL CONCRETE SHALL BE CLASS D (BOX CULVERT)
11. ALL CONSTRUCTION JOINTS SHALL BE THOROUGHLY CLEANED AND ROUGHENED BEFORE FRESH CONCRETE IS PLACED.
12. ALL CONSTRUCTION JOINTS NOT SHOWN ON THE PLANS SHALL BE APPROVED BY THE ENGINEER.
13. THE CONTRACTOR SHALL BE RESPONSIBLE FOR THE STABILITY OF THE STRUCTURE DURING CONSTRUCTION.
14. THE CONTRACTOR SHALL NOT BACKFILL STRUCTURES UNTIL TOP SLAB HAS REACHED 80% OF DESIGN STRENGTH.
15. ALL EXPOSED CONCRETE CORNERS SHALL BE CHAMFERED 3/4", UNLESS SHOWN OR OTHERWISE NOTED.
16. GRADE 60 REINFORCING STEEL IS REQUIRED.
17. ALL REINFORCING STEEL SHALL BE BLACK REINFORCING BARS UNLESS OTHERWISE NOTED.
18. THE FOLLOWING TABLE GIVES THE MINIMUM CLASS B LAP SPLICE LENGTH FOR BLACK (NON-EPOXY COATED) REINFORCING BARS PLACED IN ACCORDANCE WITH SUBSECTION 602.06, THESE SPLICE LENGTH SHALL INCREASE BY 25% FOR BARS SPACED LESS THAN 6" ON CENTER.

BAR SIZE:	#4	#5	#6	#7	#8	#9	#10	#11
SPLICE LENGTH FOR CLASS D CONCRETE:	1'-0"	1'-4"	1'-7"	1'-11"	2'-6"	3'-1"	3'-11"	4'-10"

19. ALL REINFORCEMENT SHALL HAVE A CLEAR COVERAGE OF 2", EXCEPT AS SHOWN ON THE PLANS. CLEAR COVERAGE SHALL BE MEASURED FROM THE SURFACE OF THE CONCRETE TO THE OUTSIDE OF THE REINFORCEMENT.
20. THE STOCK LENGTH USED FOR ALL REINFORCING IS 60 FEET.
21. ALL TRANSVERSE REINFORCING SHAIL BE NORMAL TO THE CENTERLINE OF THE BOX.
22. THE CONTRACTOR SHALL BE RESPONSIBLE FOR THE STABILITY OF THE STRUCTURE DURING CONSTRUCTION.
23. ALL DIMENSIONS ARE PERPENDICULAR TO THE CENTERLINE OF THE BOX.
24. STATIONS, ELEVATIONS, AND DIMENSIONS CONTAINED IN THESE PLANS ARE CALCULATED FROM A RECENT FIELD SURVEY. THE CONTRACTOR SHALL VERIFY ALL DEPENDENT DIMENSIONS IN THE FIELD BEFORE ORDERING OR FABRICATING ANY MATERIAL
25. THE INFORMATION SHOWN ON THESE PLANS CONCERNING-THE TYPE AND LOCATION OF UNDERGROUND UTILITIES IS NOT GUARANTEED TO BE ACCURATE OR ALL INCLUSIVE. THE CONTRACTOR IS RESPONSIBLE FOR MAKING HIS OWN DETERMINATION AS TO THE TYPE AND LOCATION OF UNDERGROUND UTILITIES AS MAY BE NECESSARY TO AVOID DAMAGE THERETO. THE CONTRACTOR SHALL CONTACT THE UTILITY NOTIFICATION CENTER OF COLORADO AT 1-800-922-1987 AT LEAST 2 DAYS (NOT INCLUDING THE DAY OF NOTIFICATION) PRIOR TO ANY EXCAVATION OR OTHER EARTHWORK.
26. A STRUCTURAL CONCRETE COATING SHALL BE APPLIED TO ALL GRAY CONCRETE (NO INTEGRAL COLOR) EXPOSED SURFACES TO 1'-0" BELOW FINAL GRADE UNLESS OTHERWISE NOTED. THE COLOR SHALL BE EQUIVALENT TO FEDERAL STANDARD 595B, COLOR NO. 33522 (LIGHT TAN). TEST PANELS SHALL BE SUBMITTED IN ACCORDANCE WITH CDOT STANDARD SPECIFICATION 601.14(B) 4.

DESIGN DATA

AASHTO LRFD 6TH EDITION, 2012

DESIGN METHOD: LOAD AND RESISTANCE FACTOR DESIGN

LOADING DATA:

LIVE LOAD = AASHTO LRFD, HL-93 TRUCK, HL-93 TANDEM, AND COLORADO PERMIT TRUCK

DEAD LOAD CASE 1: VERTICAL EARTH LOAD = 120 PCF
HORIZONTAL EARTH LOAD = 30 PCF

DEAD LOAD CASE 2: VERTICAL EARTH LOAD = 120 PCF
HORIZONTAL EARTH LOAD = 60 PCF

LIVE LOAD SURCHARGE ON EXTERIOR WALLS = 2'-0" OF EARTH

REINFORCED CONCRETE:

CLASS D CONCRETE: f' c = 4,500 psi

REINFORCING STEEL: f y = 60,000 psi

Know what's **below**
Call before you dig.

PLOTTED: 6/19/2015 10:50:25 AM
NAME: P:\11-039.03 WONDERLAND CREEK LOWER REACH - FINAL DESIGN\CAD\11-039.03_STR SPRING CREEK CROSSING GEN INFO.DWG

Computer File Information	
Creation Date: 05/30/15	Initials: JHK
Last Modification Date: 06/18/15	Initials: JHK
Full Path: P:\11-039.03\CAD	
Drawing File Name: 11-039.03_STR SPRING CREEK CROSSING GEN INFO.dwg	
AutoCAD 2014	Scale: AS SHOWN

MULLER ENGINEERING CO., INC.
CONSULTING ENGINEERS
777 S. WADSWORTH BLVD. 4-100
LAKEWOOD, COLORADO 80226
(303) 988-4939

MEC PROJECT NO. 11039.03

REGISTERED PROFESSIONAL ENGINEER 32038 6-18-15

Sheet Revisions		
Date:	Comments	Init.

As Constructed
No Revisions:
Revised:
Void:

Region 4 RDM

CITY OF BOULDER

WONDERLAND CREEK - GREENWAYS IMPROVEMENT PROJECT

SPRING CREEK PLACE CULVERT
GENERAL INFORMATION

Designer:	KMA	Structure Numbers	
Detailer:	JHK		
Sheet Subset:	DRAINAGE	Subset Sheets:	SPC-1

Project No./Code
STM 110-081
18405
Sheet Number: 139

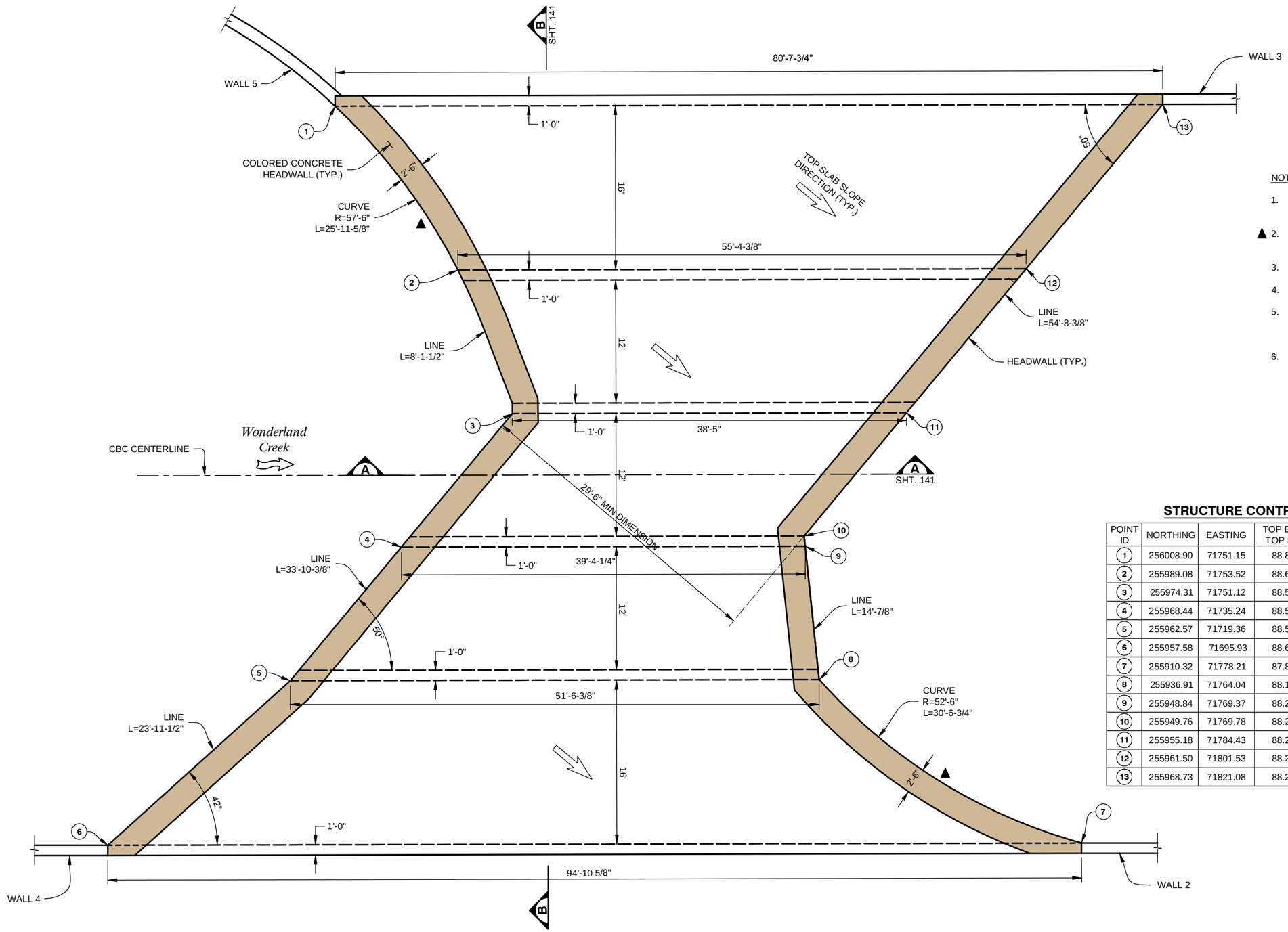

NOTES:

1. CBC EXTERIOR & INTERIOR WALL HEIGHTS VARY ALONG THE LENGTH OF THE CBC.
2. ▲ THE END OF THE CBC SHALL BE FORMED CURVED AT THE LOCATIONS SHOWN ON THIS DRAWING.
3. FOR SECTION A-A AND B-B, SEE SHT. 141.
4. FOR RETAINING WALL 2, 3, 4 AND 5 SEE SHTS. 245 - 246.
5. THE TOP SLAB SHALL BE CONSTRUCTED WITH A CONSISTENT 1'-3" THICKNESS AND SLOPED AT 1% PER THE DIRECTION SHOWN ON THE PLANS.
6. THE TOP OF CULVERT WALL ELEVATIONS SHALL BE CONSTRUCTED EQUAL TO THE BOTTOM ELEVATIONS OF THE TOP SLAB PROVIDED IN THE STRUCTURE CONTROL TABLE. TOP OF WALL ELEVATIONS IN BETWEEN THESE POINTS CAN BE OBTAINED BY STRAIGHT LINING THE GRADE.

STRUCTURE CONTROL TABLE

POINT ID	NORTHING	EASTING	TOP EL. OF TOP SLAB	BOTTOM EL. OF TOP SLAB
1	256008.90	71751.15	88.89	87.22
2	255989.08	71753.52	88.69	87.02
3	255974.31	71751.12	88.56	86.89
4	255968.44	71735.24	88.56	86.89
5	255962.57	71719.36	88.56	86.89
6	255957.58	71695.93	88.60	86.93
7	255910.32	71778.21	87.87	86.20
8	255936.91	71764.04	88.17	86.50
9	255948.84	71769.37	88.26	86.59
10	255949.76	71769.78	88.27	86.60
11	255955.18	71784.43	88.27	86.60
12	255961.50	71801.53	88.27	86.60
13	255968.73	71821.08	88.27	86.60

N

0' 2.5' 5' 10'

PLOTTED: 6/19/2015 10:50:38 AM
NAME: P:\11-039.03 WONDERLAND CREEK LOWER REACH -FINAL DESIGN\CAD\11-039.03_STR SPRING CREEK CROSSING PLAN-1.DWG

Computer File Information	
Creation Date: 07/09/14	Initials: JHK
Last Modification Date: 06/18/15	Initials: JHK
Full Path: P:\11-039.03\CAD	
Drawing File Name: 11-039.03_STR SPRING CREEK CROSSING PLAN-1.dwg	
AutoCAD 2014	Scale: AS SHOWN

MULLER ENGINEERING CO., INC.
CONSULTING ENGINEERS
777 S. WADSWORTH BLVD. 4-100
LAKEWOOD, COLORADO 80226
(303) 988-4939
MULLER
MEC PROJECT NO. 11039.03

COLORADO REGISTERED PROFESSIONAL ENGINEER 32038 6-18-15

Sheet Revisions		
Date:	Comments	Init.

As Constructed
No Revisions:
Revised:
Void:

Region 4 RDM
CITY OF BOULDER

WONDERLAND CREEK - GREENWAYS IMPROVEMENT PROJECT
SPRING CREEK PLACE CULVERT PLAN

Designer:	KMA	Structure Numbers	
Detailer:	JHK		
Sheet Subset:	DRAINAGE	Subset Sheets:	SPC-2

Project No./Code
STM 110-081
18405
Sheet Number: 140

NOTES:

1. THE CULVERT OPENING HEIGHTS WILL VARY AND THE TOP LINE OF THE OPENING IS SLOPED IN SOME CASES. SEE NOTES AND CONTROL TABLE ON DWG. SPC-7 FOR ADDITIONAL INFORMATION. THE RANGE OF OPENINGS IS 4'-6" TO 5'-6-1/4".
2. ▲ FOR CBC TOP SLAB ELEVATIONS SEE STRUCTURE CONTROL TABLE SHT. 140

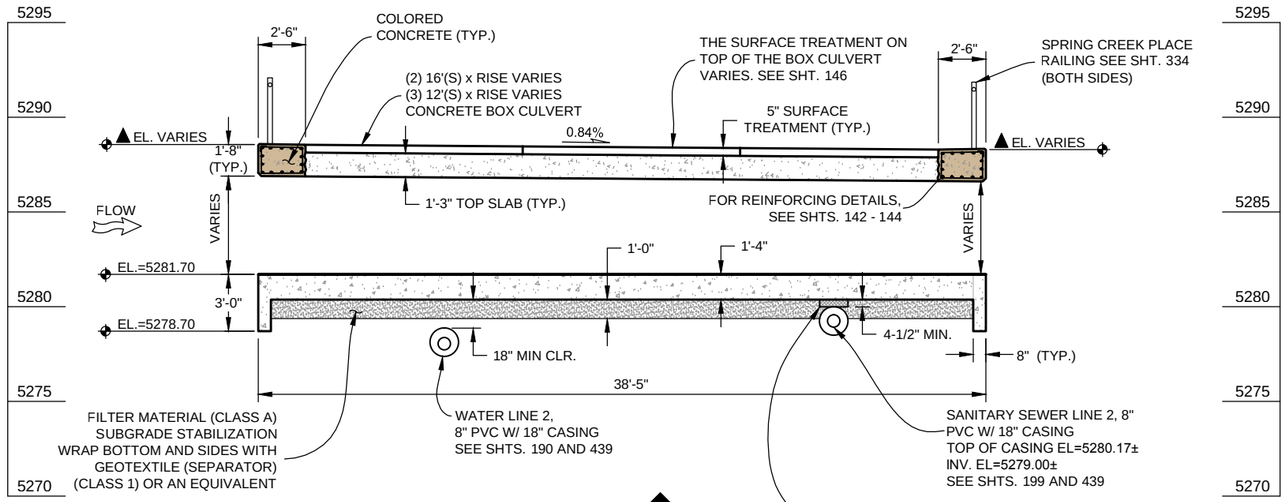

SECTION A
SHT. 140
0' 2' 4' 8'
SCALE: 1/8" = 1'-0"

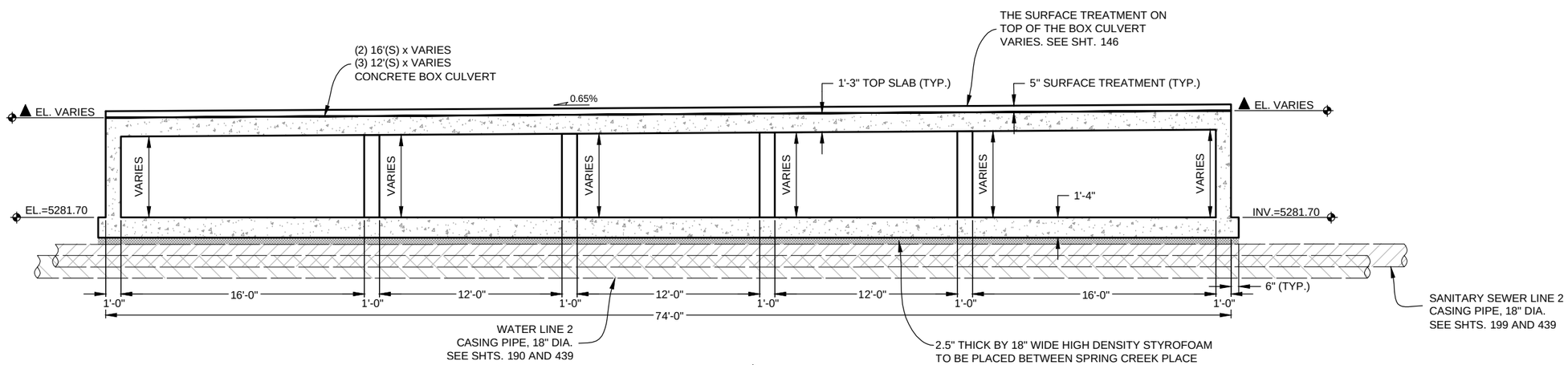

SECTION B
SHT. 140
0' 2' 4' 8'
SCALE: 1/8" = 1'-0"

Computer File Information			
Creation Date: 05/05/14	Initials: JHK		
Last Modification Date: 06/18/15	Initials: JHK		
Full Path: P:\11-039.03\CAD			
Drawing File Name: 11-039.03_STR SPRING CREEK CROSSING SECTIONS.dwg			
AutoCAD 2014	Scale: AS SHOWN		

MULLER ENGINEERING CO., INC.
CONSULTING ENGINEERS
777 S. WADSWORTH BLVD. 4-100
LAKEWOOD, COLORADO 80226
(303) 988-4939
MULLER
MEC PROJECT NO. 11039.03

COLORADO REGISTERED PROFESSIONAL ENGINEER 32038 6-18-15

Sheet Revisions		
Date:	Comments	Init.

As Constructed
No Revisions:
Revised:
Void:

Region 4 RDM
CITY OF BOULDER

WONDERLAND CREEK - GREENWAYS IMPROVEMENT PROJECT
SPRING CREEK PLACE CULVERT SECTIONS

Designer:	KMA	Structure Numbers	
Detailer:	JHK		
Sheet Subset:	DRAINAGE	Subset Sheets:	SPC-3

Project No./Code
STM 110-081
18405
Sheet Number: 141

PLOTTED: 6/19/2015 10:51:00 AM
NAME: P:\11-039.03 WONDERLAND CREEK LOWER REACH -FINAL DESIGN\CAD\11-039.03_STR SPRING CREEK CROSSING SECTIONS.DWG

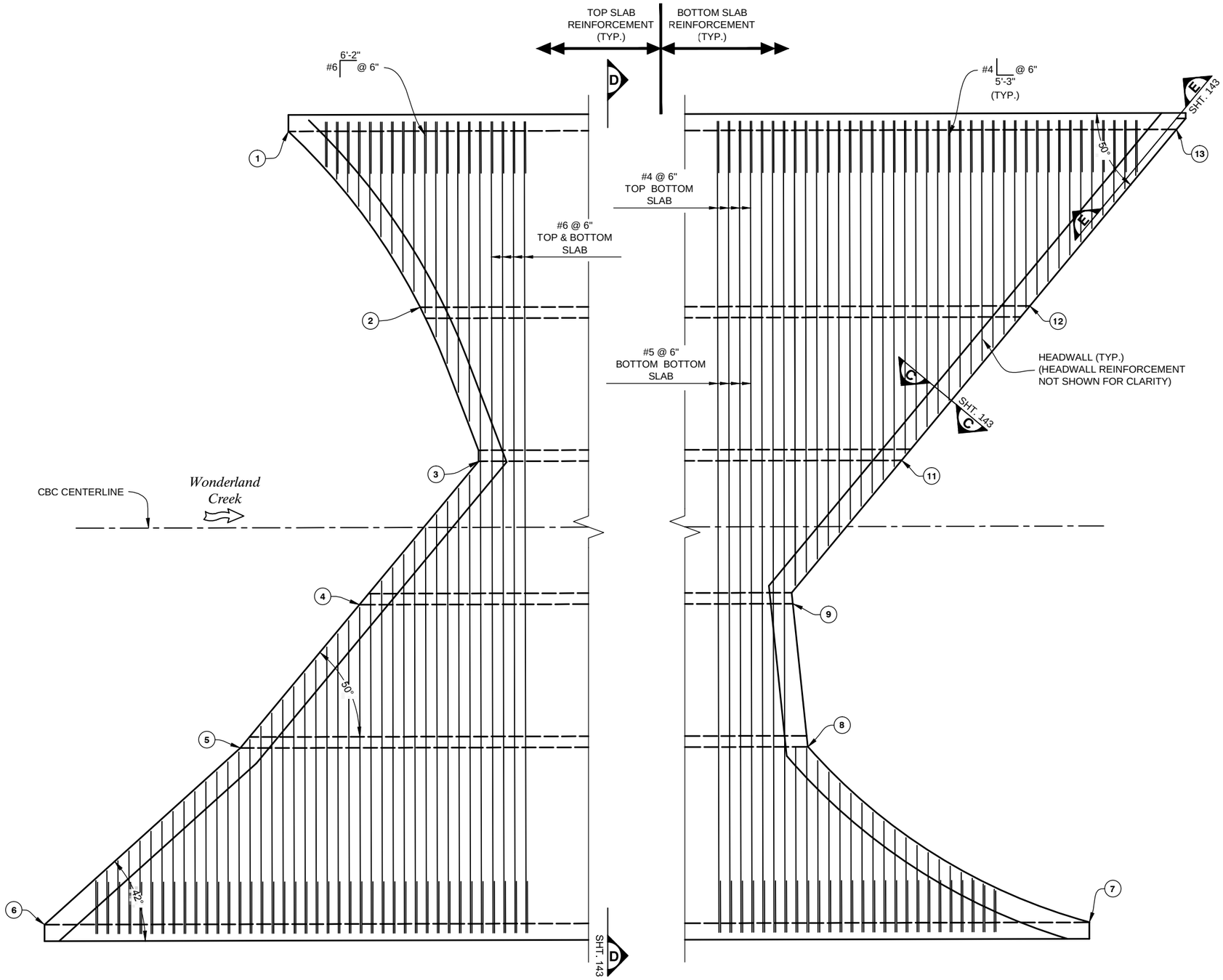

NOTES:

1. FOR SECTION C-C, D-D, & E-E SEE SHT. 143.
2. FOR POINTS (1) THROUGH (13) COORDINATES, TOP EL. OF TOP SLAB & BOTTOM EL. OF TOP SLAB, SEE SHT. 140.

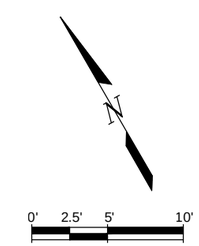

TOP AND BOTTOM SLAB REINFORCING PLAN

Computer File Information		
Creation Date: 07/09/14	Initials: JHK	
Last Modification Date: 06/18/15	Initials: JHK	
Full Path: P:\11-039.03\CAD		
Drawing File Name: 11-039.03_STR SPRING CREEK CROSSING PLAN-3.dwg		
AutoCAD 2014	Scale: AS SHOWN	

MULLER ENGINEERING CO., INC.
CONSULTING ENGINEERS
777 S. WADSWORTH BLVD. 4-100
LAKEWOOD, COLORADO 80226
(303) 988-4939
MULLER
MEC PROJECT NO. 11039.03

COLORADO REGISTERED PROFESSIONAL ENGINEER 32038 6-18-15

Sheet Revisions		
Date:	Comments	Init.

As Constructed
No Revisions:
Revised:
Void:

Region 4 RDM

CITY OF BOULDER

WONDERLAND CREEK - GREENWAYS IMPROVEMENT PROJECT
SPRING CREEK PLACE CULVERT
TOP & BOTTOM SLAB REINF. PLAN

Designer:	KMA	Structure Numbers	
Detailer:	JHK		
Sheet Subset:	DRAINAGE	Subset Sheets:	SPC-4

Project No./Code
STM 110-081
18405
Sheet Number: 142

PLOTTED: 6/19/2015 10:51:14 AM
NAME: P:\11-039.03 WONDERLAND CREEK LOWER REACH -FINAL DESIGN\CAD\11-039.03_STR SPRING CREEK CROSSING PLAN-3.DWG

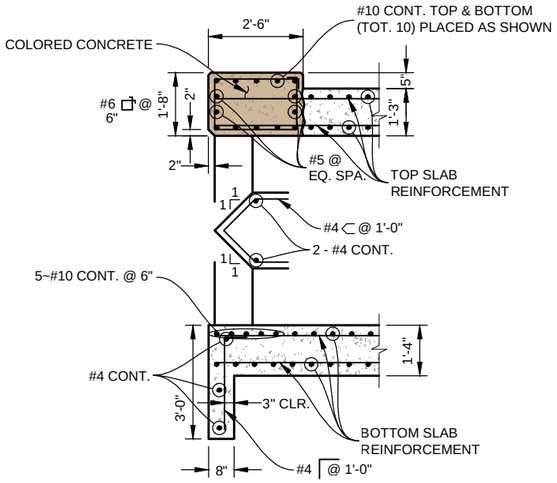

SECTION C SHT. 142

SCALE: 1/4" = 1'-0"

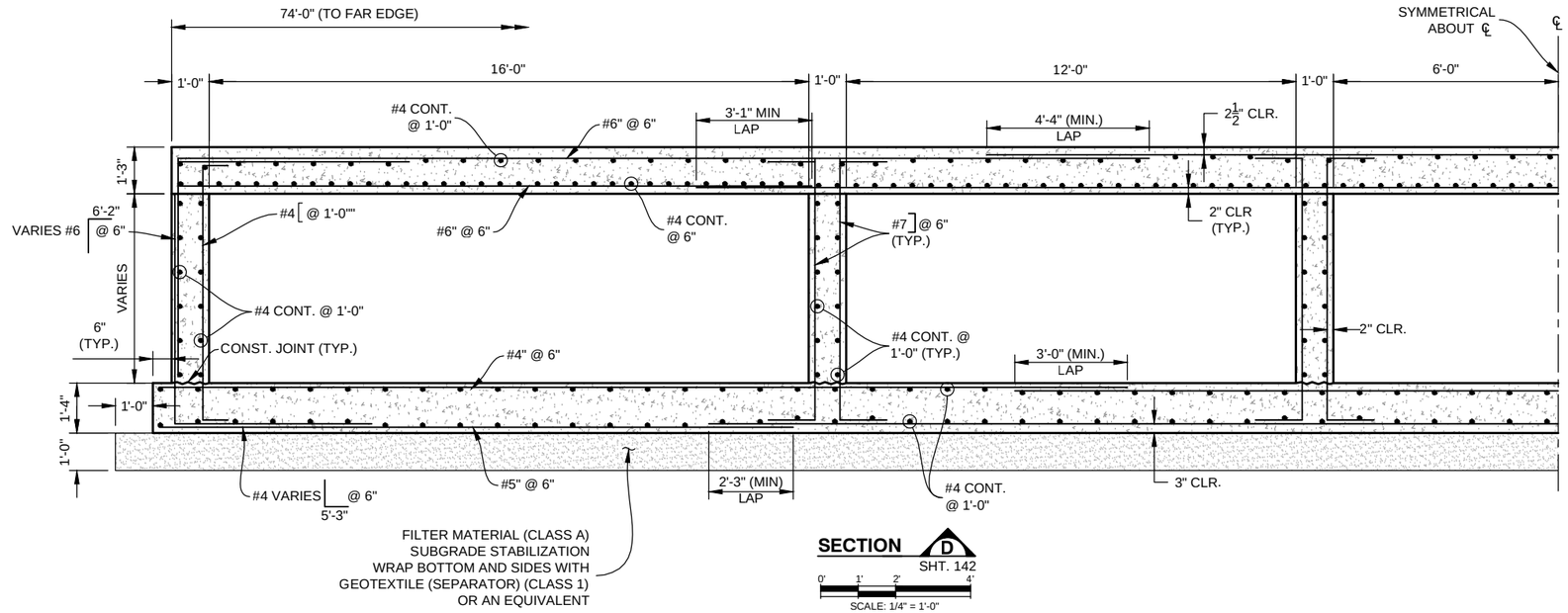

SECTION D SHT. 142

SCALE: 1/4" = 1'-0"

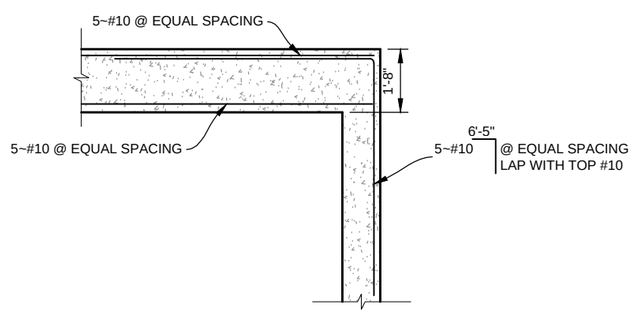

SECTION E SHT. 142

SCALE: 1/4" = 1'-0"

PLOTTED: 6/19/2015 10:51:30 AM
NAME: P:\11-039.03 WONDERLAND CREEK LOWER REACH -FINAL DESIGN\CAD\11-039.03_STR SPRING CREEK CROSSING SECTIONS.DWG

Computer File Information			
Creation Date: 05/05/14	Initials: JHK		
Last Modification Date: 06/18/15	Initials: JHK		
Full Path: P:\11-039.03\CAD			
Drawing File Name: 11-039.03_STR SPRING CREEK CROSSING SECTIONS.dwg			
AutoCAD 2014	Scale: AS SHOWN		

MULLER ENGINEERING CO., INC.
CONSULTING ENGINEERS
777 S. WADSWORTH BLVD. 4-100
LAKEWOOD, COLORADO 80226
(303) 988-4939

MEC PROJECT NO. 11039.03

COLORADO REGISTERED PROFESSIONAL ENGINEER 32038 6-18-15

Sheet Revisions		
Date:	Comments	Init.

As Constructed
No Revisions:
Revised:
Void:

Region 4 RDM

CITY OF BOULDER

WONDERLAND CREEK - GREENWAYS IMPROVEMENT PROJECT

SPRING CREEK PLACE CULVERT DETAILS

Designer:	KMA	Structure Numbers	
Detailer:	JHK		
Sheet Subset:	DRAINAGE	Subset Sheets:	SPC-5

Project No./Code
STM 110-081
18405
Sheet Number: 143

NOTES:

1. FOR POINTS (1) THROUGH (13) COORDINATES, TOP EL. OF TOP SLAB & BOTTOM EL. OF TOP SLAB, SEE SHT. 140.
2. A #6 @ 6"

   B #6 @ 6" (MAX.)
3. FOR TOP AND BOTTOM SLAB REINFORCEMENT, SEE SHTS 142 - 143.

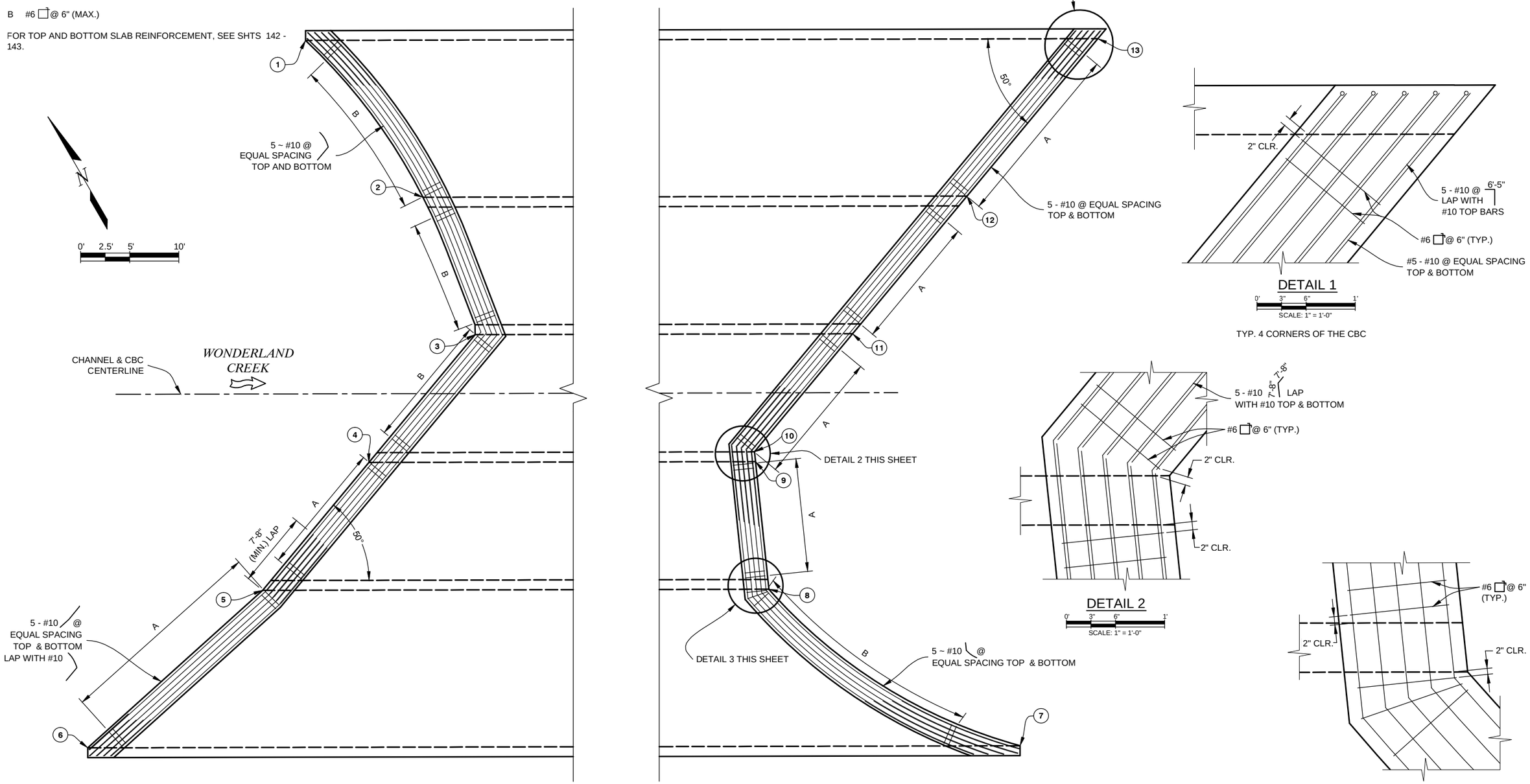

HEADWALL REINFORCING - PLAN

Computer File Information		
Creation Date: 07/09/14	Initials: JHK	
Last Modification Date: 06/18/15	Initials: JHK	
Full Path: P:\11-039.03\CAD		
Drawing File Name: 11-039.03_STR SPRING CREEK CROSSING PLAN-2.dwg		
AutoCAD 2014	Scale: AS SHOWN	

MULLER ENGINEERING CO., INC.
CONSULTING ENGINEERS
777 S. WADSWORTH BLVD. 4-100
LAKEWOOD, COLORADO 80226
(303) 988-4939

MEC PROJECT NO. 11039.03

COLORADO REGISTERED 32038 PROFESSIONAL ENGINEER 6-18-15

Sheet Revisions		
Date:	Comments	Init.

As Constructed
No Revisions:
Revised:
Void:

Region 4 RDM

CITY OF BOULDER

WONDERLAND CREEK - GREENWAYS IMPROVEMENT PROJECT

SPRING CREEK PLACE CULVERT
HEADWALL REINF. PLAN

Designer:	KMA	Structure Numbers	
Detailer:	JHK		
Sheet Subset:	DRAINAGE	Subset Sheets:	SPC-6

Project No./Code
STM 110-081
18405
Sheet Number: 144

PLOTTED: 6/19/2015 10:51:44 AM
NAME: P:\11-039.03 WONDERLAND CREEK LOWER REACH -FINAL DESIGN\CAD\11-039.03_STR SPRING CREEK CROSSING PLAN-2.DWG

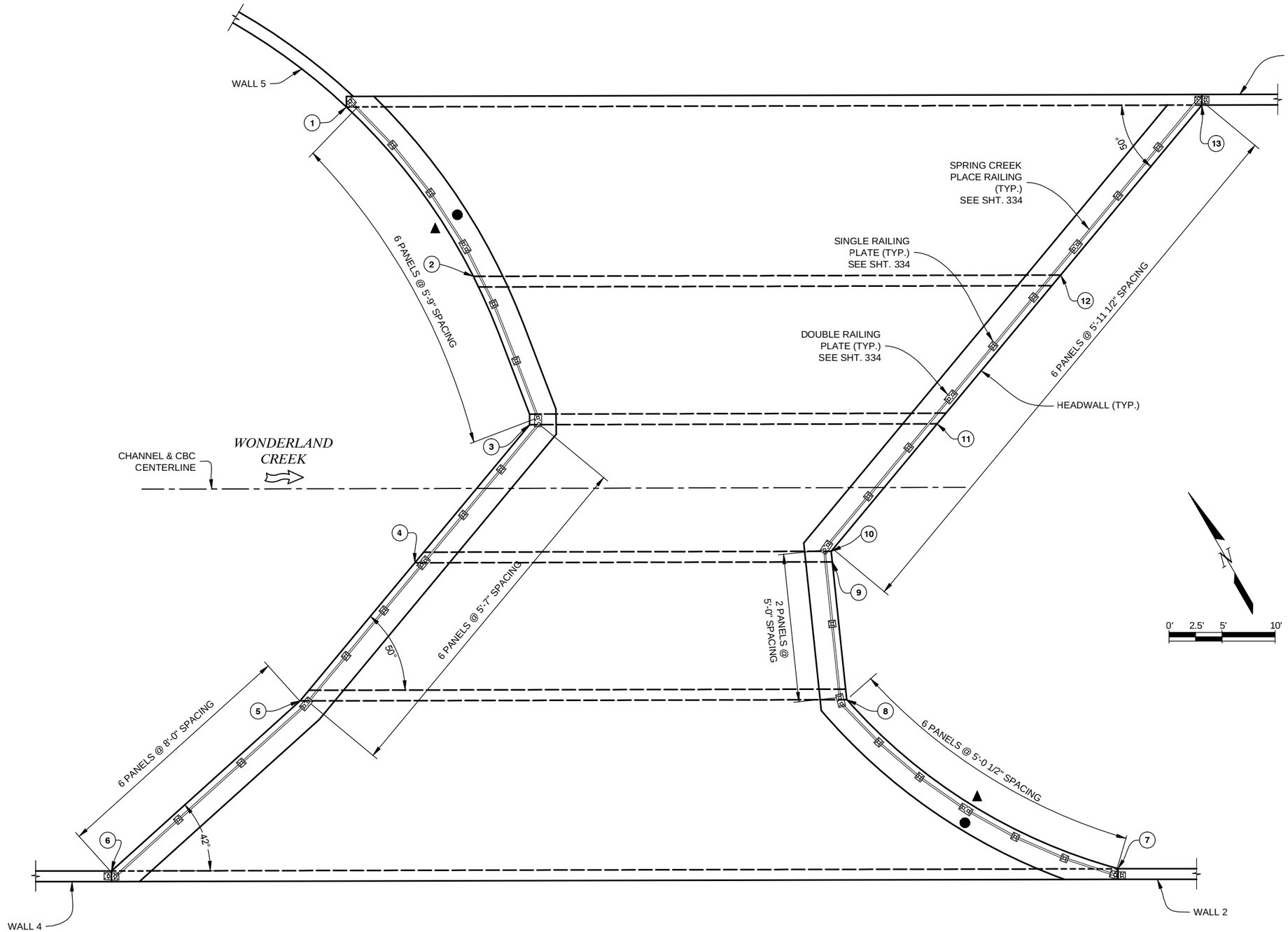

NOTES:

▲ 1. THE END OF THE CBC SHALL BE FORMED CURVED AT THE LOCATIONS SHOWN ON THIS DRAWING.

● 2. THE SPRING CREEK PLACE RAIL SHALL BE FABRICATED TO FOLLOW THE CURVED FACE OF THE CBC AT THE LOCATIONS SHOWN ON THIS DRAWING.

3. FOR POINTS (1) THROUGH (13) COORDINATES, TOP EL. OF TOP SLAB AT BOTTOM EL. OF TOP SLAB, SEE SHT. 140.

4. CONTRACTOR SHALL SUBMIT SHOP DRAWINGS FOR THE SPRING CREEK CROSSING TO THE OWNER'S ENGINEER FOR REVIEW AND APPROVAL PRIOR TO THE FABRICATION OF THE RAIL.

5. THE PROVIDED PANEL SPACING SHALL BE VERIFIED IN THE FIELD PRIOR TO FABRICATION.

Computer File Information		
Creation Date: 09/25/14	Initials: JHK	
Last Modification Date: 06/18/15	Initials: JHK	
Full Path: P:\11-039.03\CAD		
Drawing File Name: 11-039.03_STR SPRING CREEK CROSSING PLAN-4.dwg		
AutoCAD 2014	Scale: AS SHOWN	

MULLER ENGINEERING CO., INC.
CONSULTING ENGINEERS
777 S. WADSWORTH BLVD. 4-100
LAKEWOOD, COLORADO 80226
(303) 988-4939
MULLER
MEC PROJECT NO. 11039.03

COLORADO REGISTERED PROFESSIONAL ENGINEER 32038 6-18-15

Sheet Revisions		
Date:	Comments	Init.

As Constructed
No Revisions:
Revised:
Void:

Region 4 RDM

CITY OF BOULDER

WONDERLAND CREEK - GREENWAYS IMPROVEMENT PROJECT

SPRING CREEK PLACE CULVERT
RAILING LAYOUT PLAN

Designer:	KMA	Structure Numbers	
Detailer:	JHK		
Sheet Subset:	DRAINAGE	Subset Sheets:	SPC-7

Project No./Code
STM 110-081
18405
Sheet Number: 145

PLOTTED: 6/19/2015 10:51:57 AM
NAME: P:\11-039.03 WONDERLAND CREEK LOWER REACH -FINAL DESIGN\CAD\11-039.03_STR SPRING CREEK CROSSING PLAN-4.DWG

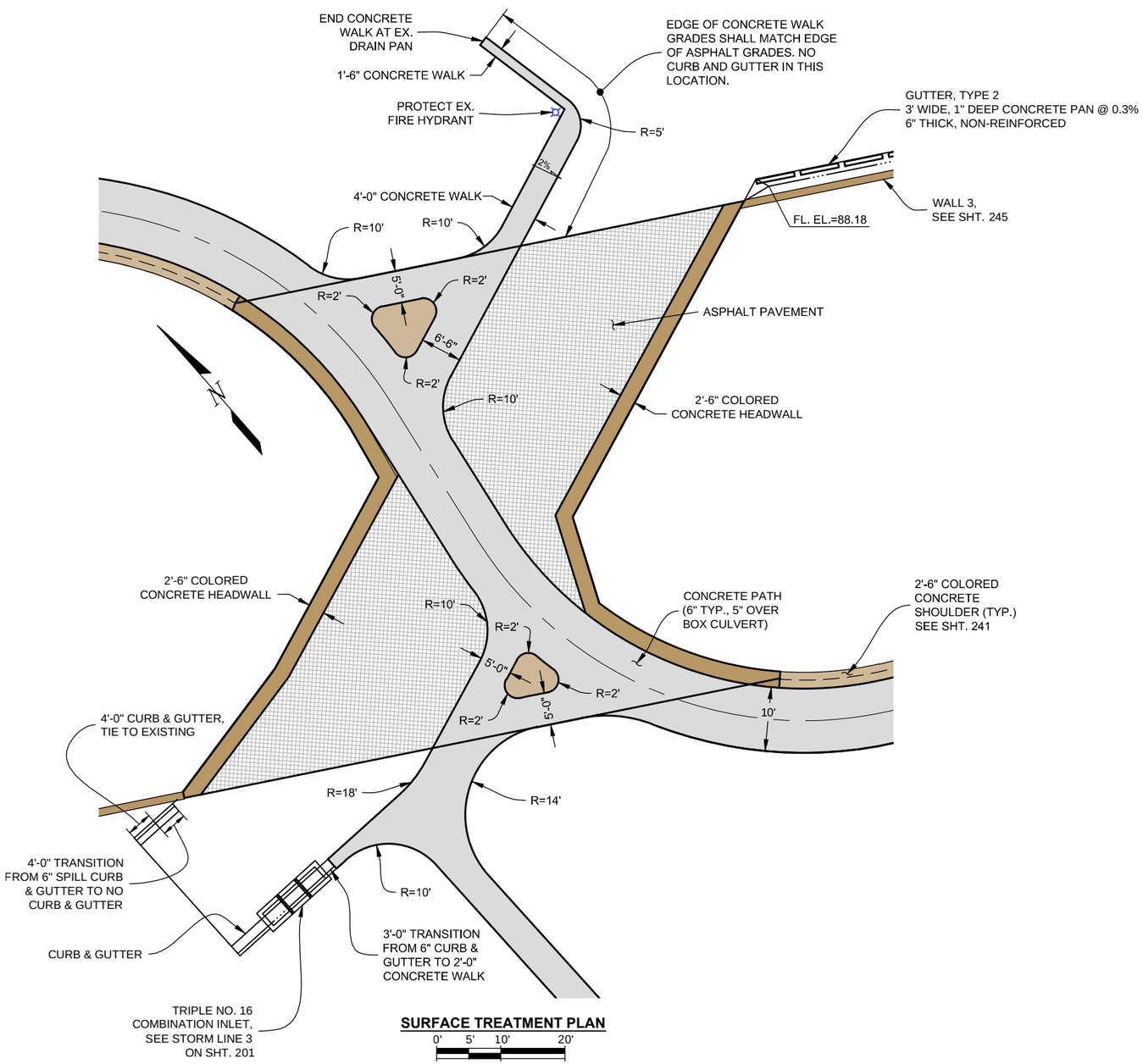

SURFACE TREATMENT PLAN

0' 5' 10' 20'

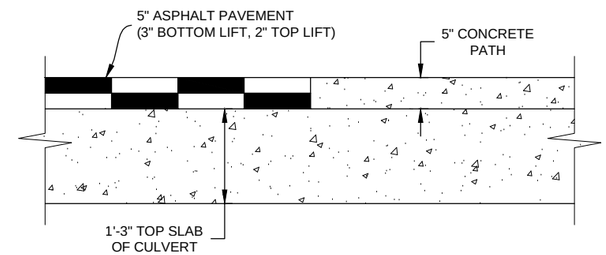

SURFACE TREATMENT /BOX CULVERT INTERFACE DETAIL

0' 6" 1' 2'

SCALE: 1/2" = 1'-0"

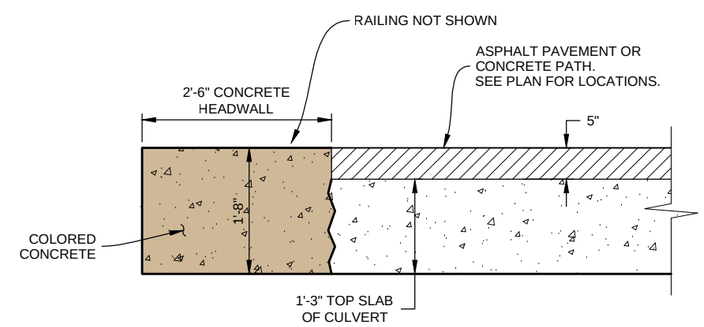

SURFACE TREATMENT / HEADWALL INTERFACE DETAIL

0' 6" 1' 2'

SCALE: 1/2" = 1'-0"

NOTES:

1. ASPHALT PAVEMENT SHALL MEET THE SAME SPECIFICATIONS AS THE IRIS AVE./34TH STREET PAVEMENT DESIGN LISTED ON SHT. 290

Computer File Information		
Creation Date: 10/07/14	Initials: JHK	
Last Modification Date: 06/18/15	Initials: JHK	
Full Path: P:\11-039.03\CAD		
Drawing File Name: 11-039.03_SURFACE TREATMENT DETAILS.dwg		
AutoCAD 2014	Scale: AS SHOWN	

MULLER ENGINEERING CO., INC.
MULLER
CONSULTING ENGINEERS
777 S. WADSWORTH BLVD. 4-100
LAKEWOOD, COLORADO 80226
(303) 988-4939
MEC PROJECT NO. 11039.03

COLORADO REGISTERED PROFESSIONAL ENGINEER CHRISTOPHER L. KRIEGER 37254 6/18/15

Sheet Revisions		
Date:	Comments	Init.

As Constructed
No Revisions:
Revised:
Void:

Region 4 RDM

CITY OF BOULDER

WONDERLAND CREEK - GREENWAYS IMPROVEMENT PROJECT

SPRING CREEK PLACE CULVERT
SURFACE TREATMENT PLAN & DETAILS

Designer:	JW3	Structure Numbers	
Detailer:	JHK		
Sheet Subset:	DRAINAGE	Subset Sheets:	SPC-8

Project No./Code
STM 110-081
18405
Sheet Number: 146

PLOTTED: 6/19/2015 10:52:40 AM
NAME: P:\11-039.03 WONDERLAND CREEK LOWER REACH -FINAL DESIGN\CAD\11-039.03_SURFACE TREATMENT DETAILS.DWG

STRUCTURE GENERAL NOTES

1. ALL WORK SHALL BE DONE IN ACCORDANCE WITH THE COLORADO DEPARTMENT OF TRANSPORTATION (CDOT) STANDARD SPECIFICATIONS FOR ROAD AND BRIDGE CONSTRUCTION, 2011 EDITION, AS APPLICABLE TO THE PROJECT.
2. STRUCTURE EXCAVATION AND BACKFILL SHALL BE IN ACCORDANCE WITH CDOT STANDARD PLANS, M&S STANDARDS M-206-1, UNLESS OTHERWISE NOTED ON PLANS.
3. STRUCTURE BACKFILL FOR THE BOX CULVERT AND WINGWALLS SHALL CONFORM TO STRUCTURE BACKFILL (CLASS 1) SPECIFICATIONS, AND SHALL BE PLACED IN ACCORDANCE WITH CDOT SPECIFICATIONS, SECTION 206.
4. THE SOILS AND FOUNDATION INVESTIGATION FOR THE CONCRETE BOX CULVERT AND WINGWALLS WAS PERFORMED BY CTL THOMPSON, INC. THE SUB SURFACE CONDITIONS AND RECOMMENDATIONS FOR THE STRUCTURE ARE CONTAINED IN A REPORT DATED JULY 3, 2013, PROJ NO. DN46,599-125. REFER TO THE PROJECT SPECIFICATIONS FOR COPIES OF THESE REPORTS.
5. THE BOTTOM SLAB OF THE BOX CULVERT, AND THE WINGWALL FOOTINGS SHALL NOT BE PLACED UNTIL SUBGRADE IS OBSERVED AND APPROVED IN WRITING BY THE ENGINEER.
6. EXPANSION JOINT MATERIAL SHALL MEET AASHTO SPECIFICATION M-213.
7. THE COST FOR EXPANSION JOINT MATERIAL SHALL NOT BE PAID FOR SEPARATELY BUT SHALL BE INCLUDED IN THE WORK.
8. WATER STOPS SHALL MEET THE REQUIREMENTS OF CDOT SPECIFICATIONS, SECTION 518.
9. STRUCTURAL CONCRETE EXPOSED TO SOIL SHALL CONFORM TO CEMENTITIOUS MATERIALS REQUIREMENTS CLASS 0 CORRESPONDING TO SULFATE EXPOSURE CLASS 0.
10. ALL CONCRETE SHALL BE CLASS D (BOX CULVERT)
11. ALL CONSTRUCTION JOINTS SHALL BE THOROUGHLY CLEANED AND ROUGHENED BEFORE FRESH CONCRETE IS PLACED.
12. ALL CONSTRUCTION JOINTS NOT SHOWN ON THE PLANS SHALL BE APPROVED BY THE ENGINEER.
13. WINGWALL FOOTINGS AND BOTTOM SLAB OF BOX CULVERT SHALL BE PLACED MONOLITHICALLY.
14. THE CONTRACTOR SHALL BE RESPONSIBLE FOR THE STABILITY OF THE STRUCTURE DURING CONSTRUCTION.
15. THE CONTRACTOR SHALL NOT BACKFILL STRUCTURES UNTIL TOP SLAB AND WALLS HAVE REACHED 80% OF DESIGN STRENGTH.
16. ALL EXPOSED CONCRETE CORNERS SHALL BE CHAMFERED 3/4", UNLESS SHOWN OR OTHERWISE NOTED.
17. GRADE 60 REINFORCING STEEL IS REQUIRED.
18. ALL REINFORCING STEEL SHALL BE BLACK REINFORCING BARS UNLESS OTHERWISE NOTED.
19. THE FOLLOWING TABLE GIVES THE MINIMUM CLASS B LAP SPLICE LENGTH FOR BLACK (NON-EPOXY COATED) REINFORCING BARS PLACED IN ACCORDANCE WITH SUBSECTION 602.06, THESE SPLICE LENGTH SHALL INCREASE BY 25% FOR BARS SPACED LESS THAN 6" ON CENTER.

BAR SIZE:	#4	#5	#6	#7	#8	#9	#10	#11
SPLICE LENGTH FOR CLASS D CONCRETE:	1'-0"	1'-4"	1'-7"	1'-11"	2'-6"	3'-1"	3'-11"	4'-10"

20. ALL REINFORCEMENT SHALL HAVE A CLEAR COVERAGE OF 2", EXCEPT AS SHOWN ON THE PLANS. CLEAR COVERAGE SHALL BE MEASURED FROM THE SURFACE OF THE CONCRETE TO THE OUTSIDE OF THE REINFORCEMENT.
21. THE STOCK LENGTH USED FOR ALL REINFORCING IS 60 FEET.
22. ALL TRANSVERSE REINFORCING SHAIL BE NORMAL TO THE CENTERLINE OF THE BOX.
23. FILTER MATERIAL AND CLOTH FOR WINGWALL DRAIN HOLES SHALL BE INCLUDED IN WORK.
24. THE CONTRACTOR SHALL BE RESPONSIBLE FOR THE STABILITY OF THE STRUCTURE DURING CONSTRUCTION.
25. ALL DIMENSIONS ARE PERPENDICULAR TO THE CENTERLINE OF THE BOX.
26. STATIONS, ELEVATIONS, AND DIMENSIONS CONTAINED IN THESE PLANS ARE CALCULATED FROM A RECENT FIELD SURVEY. THE CONTRACTOR SHALL VERIFY ALL DEPENDENT DIMENSIONS IN THE FIELD BEFORE ORDERING OR FABRICATING ANY MATERIAL
27. THE INFORMATION SHOWN ON THESE PLANS CONCERNING-THE TYPE AND LOCATION OF UNDERGROUND UTILITIES IS NOT GUARANTEED TO BE ACCURATE OR ALL INCLUSIVE. THE CONTRACTOR IS RESPONSIBLE FOR MAKING HIS OWN DETERMINATION AS TO THE TYPE AND LOCATION OF UNDERGROUND UTILITIES AS MAY BE NECESSARY TO AVOID DAMAGE THERETO. THE CONTRACTOR SHALL CONTACT THE UTILITY NOTIFICATION CENTER OF COLORADO AT 1-800-922-1987 AT LEAST 2 DAYS (NOT INCLUDING THE DAY OF NOTIFICATION) PRIOR TO ANY EXCAVATION OR OTHER EARTHWORK
28. A STRUCTURAL CONCRETE COATING SHALL BE APPLIED TO ALL GRAY CONCRETE (NO INTEGRAL COLOR) EXPOSED SURFACES TO 1'-0" BELOW FINAL GRADE UNLESS OTHERWISE NOTED. THE COLOR SHALL BE EQUIVALENT TO FEDERAL STANDARD 595B, COLOR NO. 33522 (LIGHT TAN). TEST PANELS SHALL BE SUBMITTED IN ACCORDANCE WITH CDOT STANDARD SPECIFICATION 601.14(B) 4 .

DESIGN DATA

AASHTO LRFD 6TH EDITION, 2012

DESIGN METHOD: LOAD AND RESISTANCE FACTOR DESIGN

LOADING DATA:

LIVE LOAD = AASHTO LRFD, HL-93 TRUCK, HL-93 TANDEM, AND COLORADO PERMIT TRUCK

DEAD LOAD CASE 1: VERTICAL EARTH LOAD = 120 PCF
HORIZONTAL EARTH LOAD = 30 PCF

DEAD LOAD CASE 2: VERTICAL EARTH LOAD = 120 PCF
HORIZONTAL EARTH LOAD = 60 PCF

LIVE LOAD SURCHARGE ON EXTERIOR WALLS = 2'-0" OF EARTH

DESIGN LOADING (WINGWALLS):

ALLOWABLE BEARING PRESSURE = 3000 psf

UNIT SOIL WEIGHT = 135 PCF

ACTIVE LATERAL EARTH PRESSURE = 35 pcf

COEFFICIENT OF SLIDING FRICTION = 0.50

REINFORCED CONCRETE:

CLASS D CONCRETE: f' c = 4,500 psi

REINFORCING STEEL: f y = 60,000 psi

Know what's **below**
Call before you dig.

PLOTTED: 6/19/2015 10:52:54 AM
NAME: P:\11-039.03 WONDERLAND CREEK LOWER REACH - FINAL DESIGN\CAD\11-039.03_STR CBC IRIS INFO.DWG

Computer File Information	
Creation Date: 05/30/15	Initials: JHK
Last Modification Date: 06/18/15	Initials: JHK
Full Path: P:\11-039.03\CAD	
Drawing File Name: 11-039.03_STR CBC IRIS INFO.dwg	
AutoCAD 2014	Scale: AS SHOWN

MULLER ENGINEERING CO., INC.
CONSULTING ENGINEERS
777 S. WADSWORTH BLVD. 4-100
LAKEWOOD, COLORADO 80226
(303) 988-4939
MULLER
MEC PROJECT NO. 11039.03

REGISTERED PROFESSIONAL ENGINEER 32038 6-18-15

Sheet Revisions		
Date:	Comments	Init.

As Constructed
No Revisions:
Revised:
Void:

Region 4 RDM

CITY OF BOULDER

WONDERLAND CREEK - GREENWAYS IMPROVEMENT PROJECT
IRIS BOX CULVERT
GENERAL INFORMATION

Designer: KMA
Detailer: JHK
Structure Numbers
Sheet Subset: DRAINAGE
Subset Sheets: IBC-1

Project No./Code
STM 110-081
18405
Sheet Number: 147

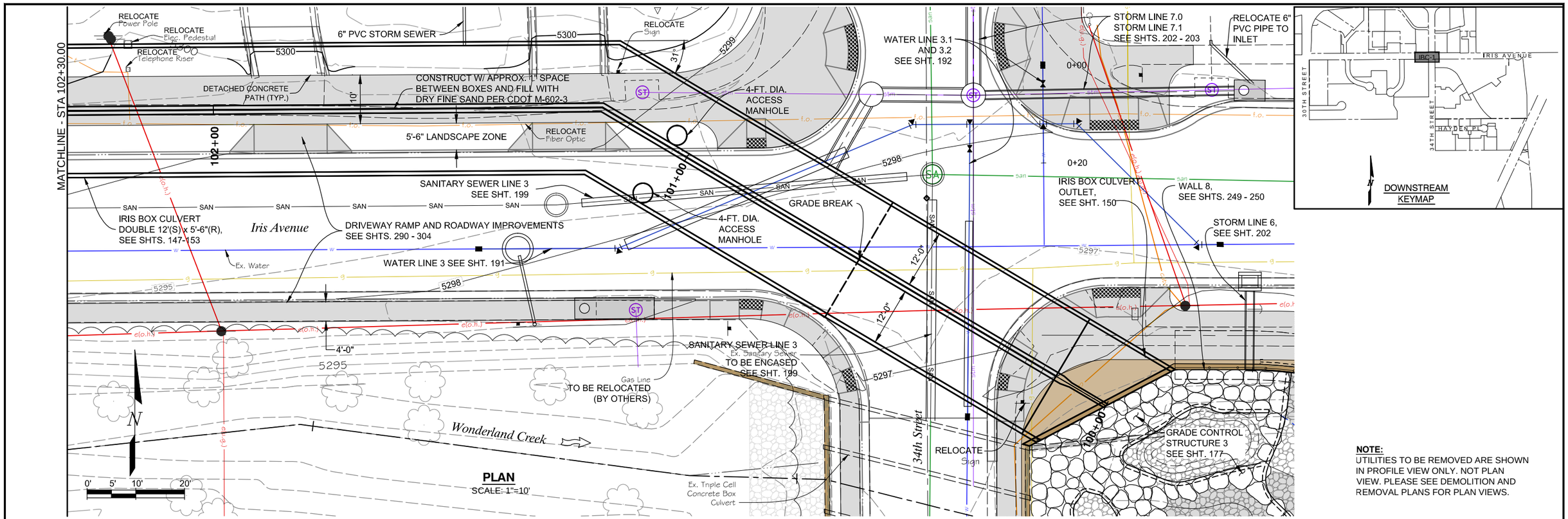

NOTE:
UTILITIES TO BE REMOVED ARE SHOWN IN PROFILE VIEW ONLY. NOT PLAN VIEW. PLEASE SEE DEMOLITION AND REMOVAL PLANS FOR PLAN VIEWS.

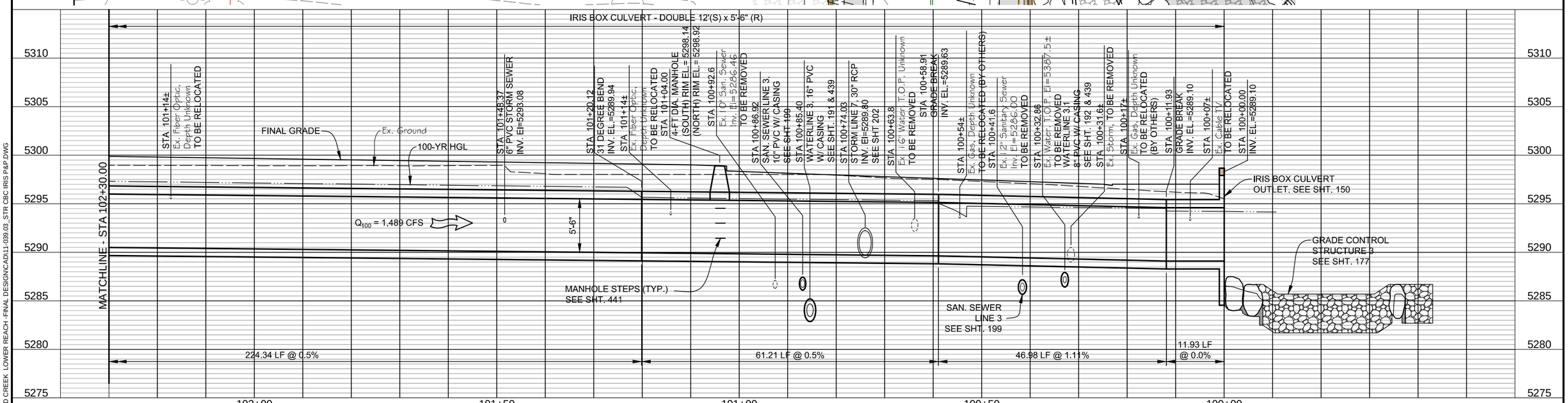

Computer File Information		
Creation Date: 07/23/14	Initials: JHK	
Last Modification Date: 06/18/15	Initials: JHK	
Full Path: P:\11-039.03\CAD		
Drawing File Name: 11-039.03_STR CBC IRIS P&P.dwg		
AutoCAD 2014	Scale: AS SHOWN	

MULLER ENGINEERING CO., INC.
CONSULTING ENGINEERS
777 S. WADSWORTH BLVD. 4-100
LAKEWOOD, COLORADO 80226
(303) 988-4939
MULLER
MEC PROJECT NO. 11039.03

COLORADO REGISTERED CHRISTOPHER L. KRAGENBRINK 37254 PROFESSIONAL ENGINEER 6/18/15

Sheet Revisions		
Date:	Comments	Init.

As Constructed
No Revisions:
Revised:
Void:

GREAT DRAINAGE AND FLOOD CONTROL DISTRICT
CDOT Region 4 RDM
CITY OF BOULDER

WONDERLAND CREEK - GREENWAYS IMPROVEMENT PROJECT
IRIS BOX CULVERT
PLAN AND PROFILE

Designer:	JW3	Structure Numbers	
Detailer:	JHK		
Sheet Subset:	DRAINAGE	Subset Sheets:	IBC-2

Project No./Code
STM 110-081
18405
Sheet Number: 148

PLOTTED: 6/19/2015 10:54:09 AM
NAME: P:\11-039.03 WONDERLAND CREEK LOWER REACH -FINAL DESIGN\CAD\11-039.03_STR CBC IRIS P&P.DWG

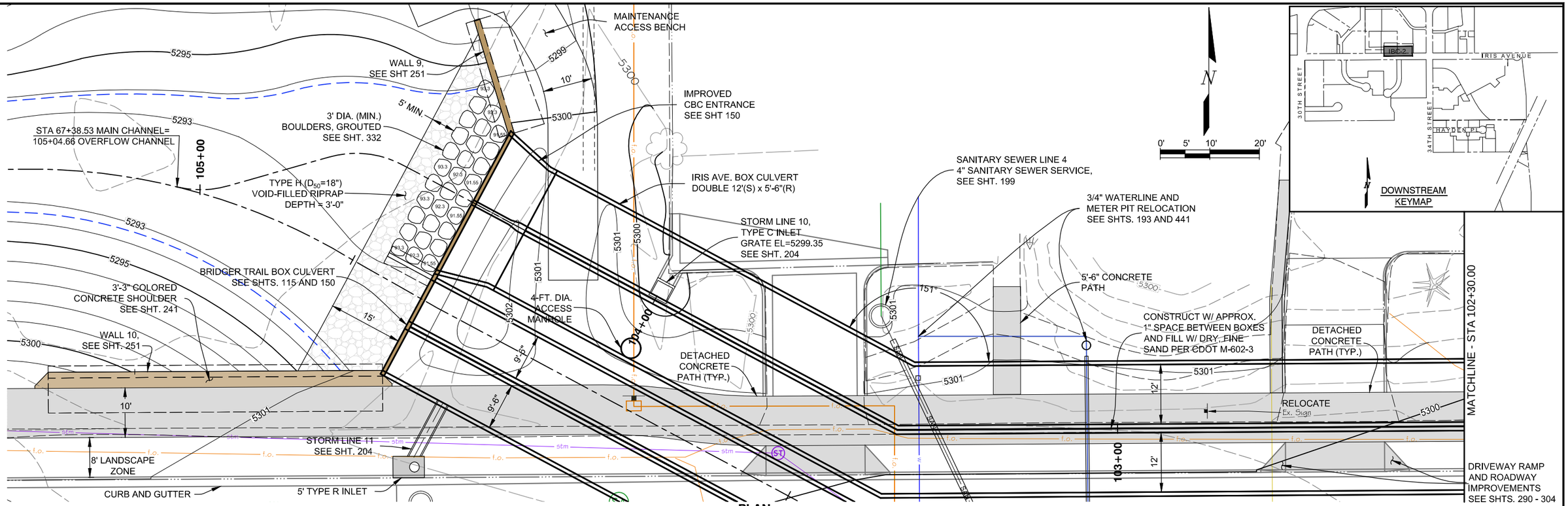

PLAN
SCALE: 1"=10'

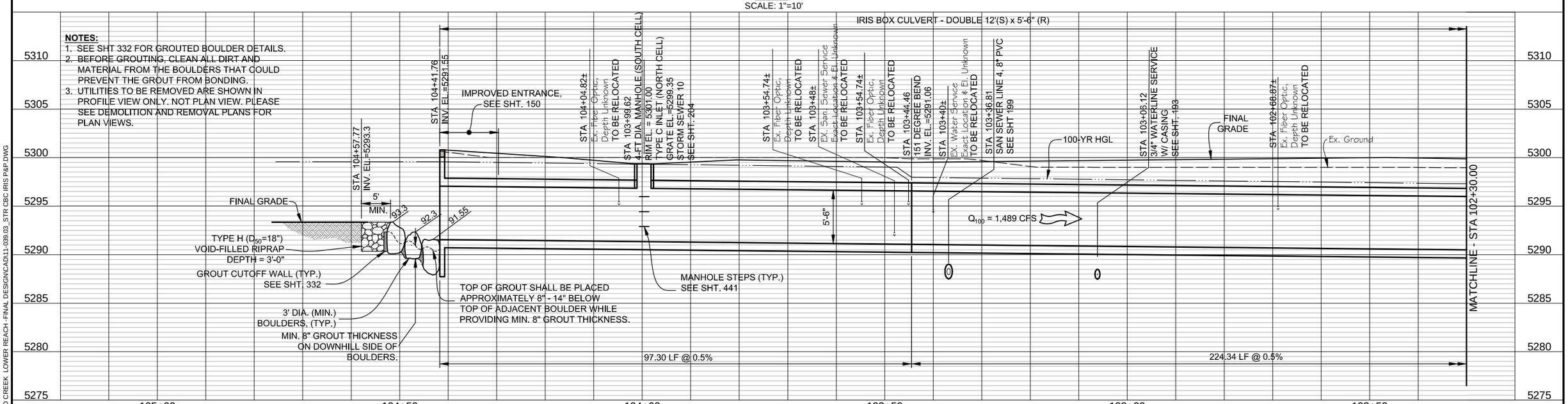

NOTES:

1. SEE SHT 332 FOR GROUTED BOULDER DETAILS.
2. BEFORE GROUTING, CLEAN ALL DIRT AND MATERIAL FROM THE BOULDERS THAT COULD PREVENT THE GROUT FROM BONDING.
3. UTILITIES TO BE REMOVED ARE SHOWN IN PROFILE VIEW ONLY. NOT PLAN VIEW. PLEASE SEE DEMOLITION AND REMOVAL PLANS FOR PLAN VIEWS.

Computer File Information		
Creation Date: 07/23/14	Initials: JHK	
Last Modification Date: 06/18/15	Initials: JHK	
Full Path: P:\11-039.03\CAD		
Drawing File Name: 11-039.03_STR CBC IRIS P&P.dwg		
AutoCAD 2014	Scale: AS SHOWN	

MULLER ENGINEERING CO., INC.
CONSULTING ENGINEERS
777 S. WADSWORTH BLVD. 4-100
LAKEWOOD, COLORADO 80226
(303) 988-4939

MEC PROJECT NO. 11039.03

COLORADO REGISTERED PROFESSIONAL ENGINEER CHRISTOPHER L. KREGER 37254 6/18/15

Sheet Revisions		
Date:	Comments	Init.

As Constructed
No Revisions:
Revised:
Void:

Region 4 RDM

CITY OF BOULDER

WONDERLAND CREEK - GREENWAYS IMPROVEMENT PROJECT
IRIS BOX CULVERT
PLAN AND PROFILE

Designer:	JW3	Structure Numbers	
Detailer:	JHK		
Sheet Subset:	DRAINAGE	Subset Sheets:	IBC-3

Project No./Code
STM 110-081
18405
Sheet Number: 149

PLOTTED: 6/19/2015 10:54:28 AM
NAME: P:\11-039.03 WONDERLAND CREEK LOWER REACH -FINAL DESIGN\CAD\11-039.03_STR CBC IRIS P&P.DWG

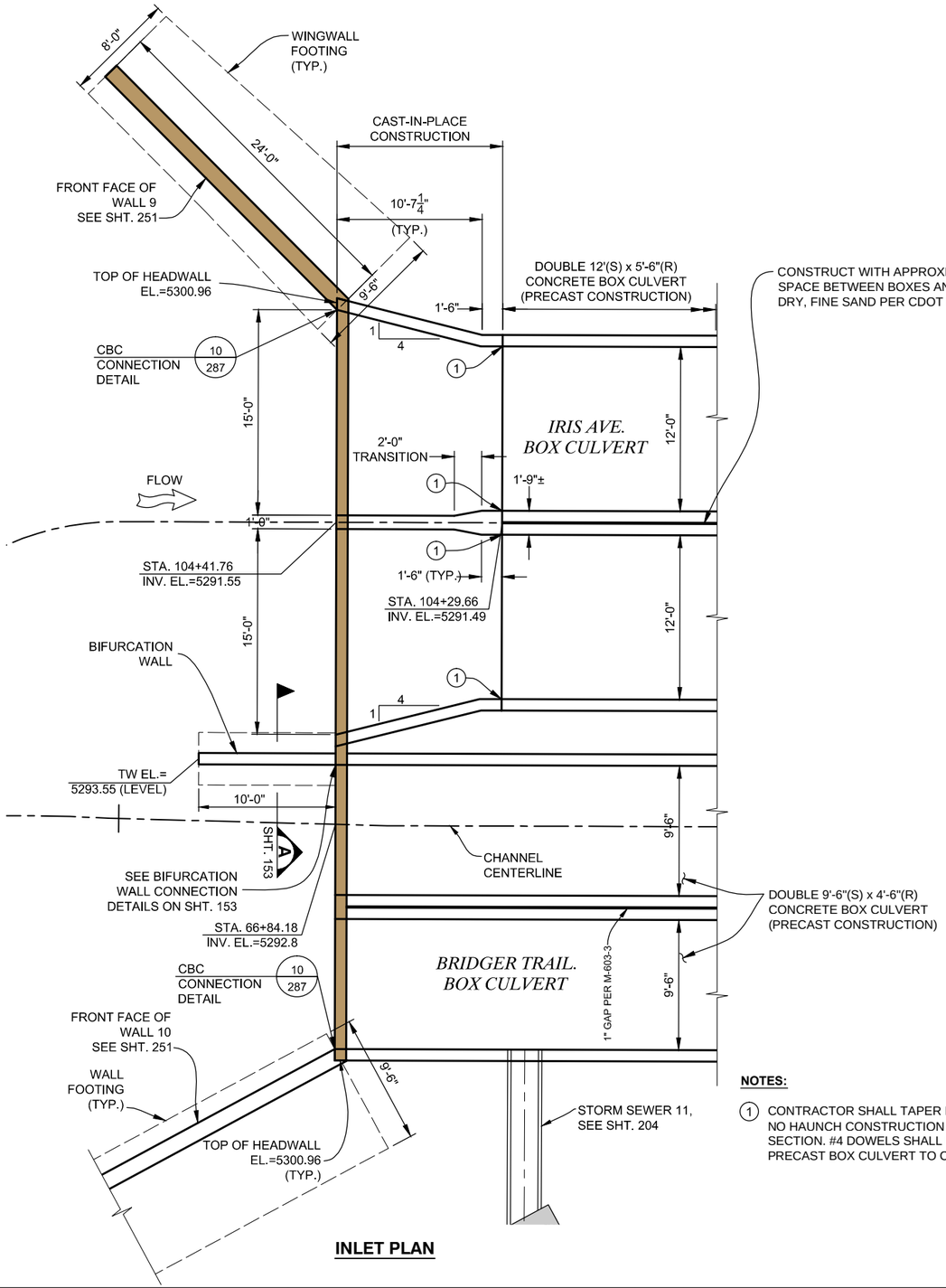

CONSTRUCT WITH APPROXIMATELY 1" SPACE BETWEEN BOXES AND FILL WITH DRY, FINE SAND PER CDOT M-602-3.

DOUBLE 9'-6"(S) x 4'-6"(R) CONCRETE BOX CULVERT (PRECAST CONSTRUCTION)

INLET PLAN

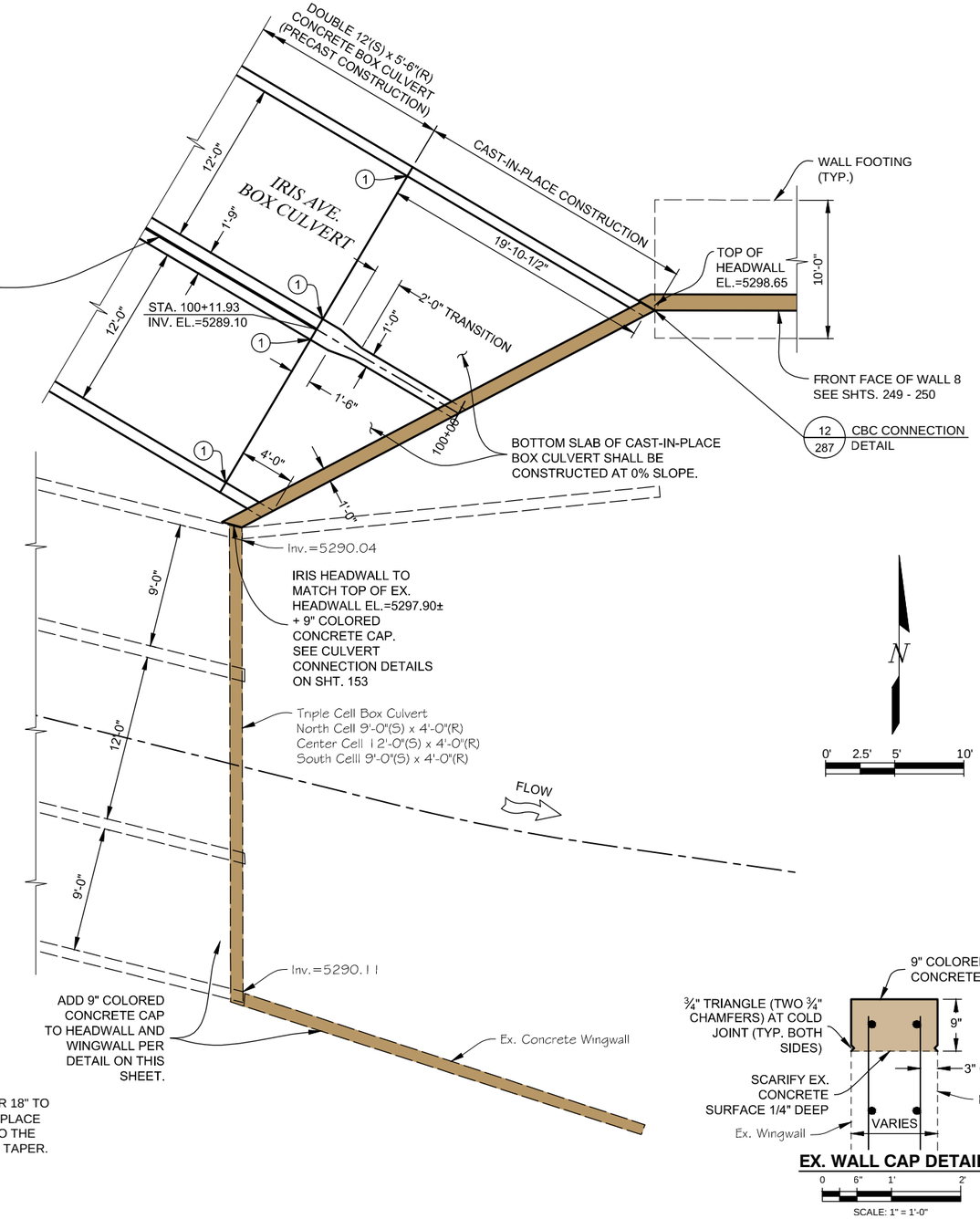

OUTLET PLAN

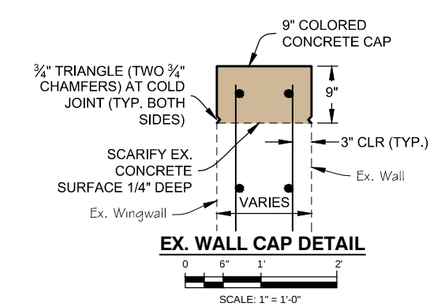

EX. WALL CAP DETAIL

NOTES:

1. CONTRACTOR SHALL TAPER HAUNCHES OVER 18" TO NO HAUNCH CONSTRUCTION IN THE CAST-IN-PLACE SECTION. #4 DOWELS SHALL BE ATTACHED TO THE PRECAST BOX CULVERT TO CONSTRUCT THE TAPER.

Computer File Information			
Creation Date: 07/18/14	Initials: JHK	MULLER ENGINEERING CO., INC.	
Last Modification Date: 06/18/15	Initials: JHK	CONSULTING ENGINEERS 777 S. WADSWORTH BLVD. 4-100 LAKEWOOD, COLORADO 80226 (303) 988-4939	
Full Path: P:\11-039.03\CAD			
Drawing File Name: 11-039.03_STR CBC IRIS.dwg			
AutoCAD 2014	Scale: AS SHOWN	MEC PROJECT NO. 11039.03	

COLORADO REGISTERED PROFESSIONAL ENGINEER 32038 6-18-15

Sheet Revisions		
Date:	Comments	Init.

As Constructed
No Revisions:
Revised:
Void:

Region 4 RDM

CITY OF BOULDER

WONDERLAND CREEK - GREENWAYS IMPROVEMENT PROJECT

IRIS BOX CULVERT INLET & OUTLET PLANS

Designer:	KMA/ASP	Structure Numbers	
Detailer:	JHK		
Sheet Subset:	DRAINAGE	Subset Sheets:	IBC-4

Project No./Code: STM 110-081

18405

Sheet Number: 150

PLOTTED: 6/19/2015 10:55:26 AM
NAME: P:\11-039.03 WONDERLAND CREEK LOWER REACH -FINAL DESIGN\CAD\11-039.03_STR CBC IRIS.DWG

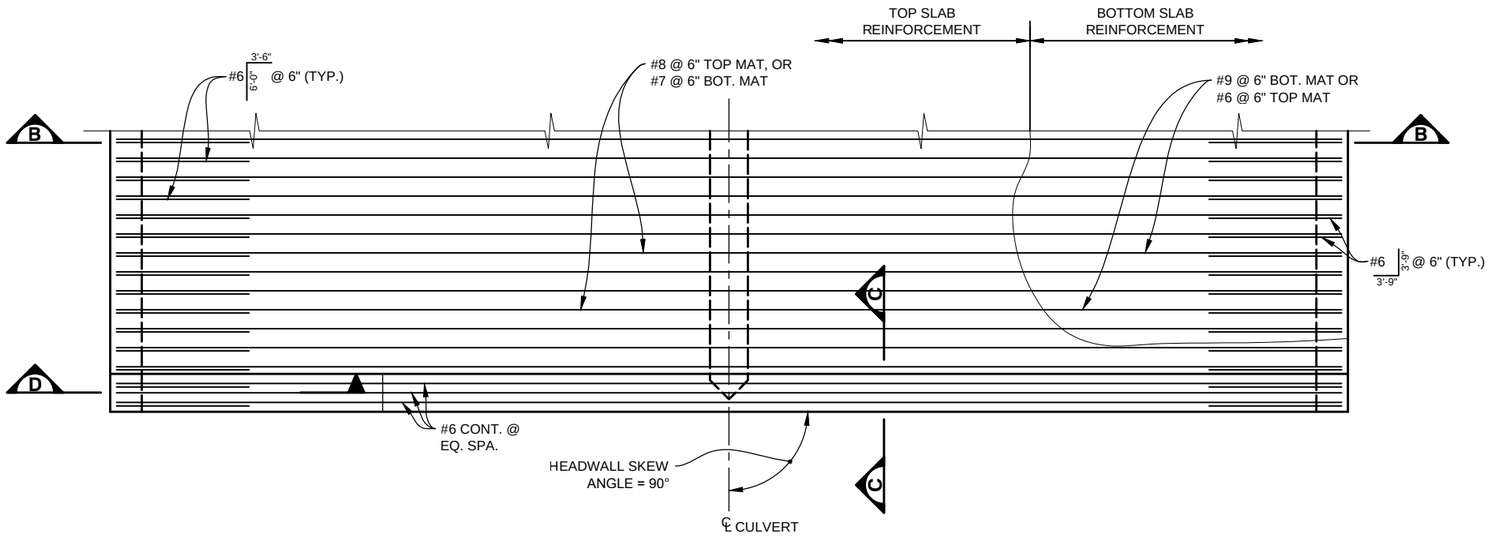

INLET REINFORCING - PLAN

0' 1' 2' 4'
SCALE: 1/4" = 1'-0"

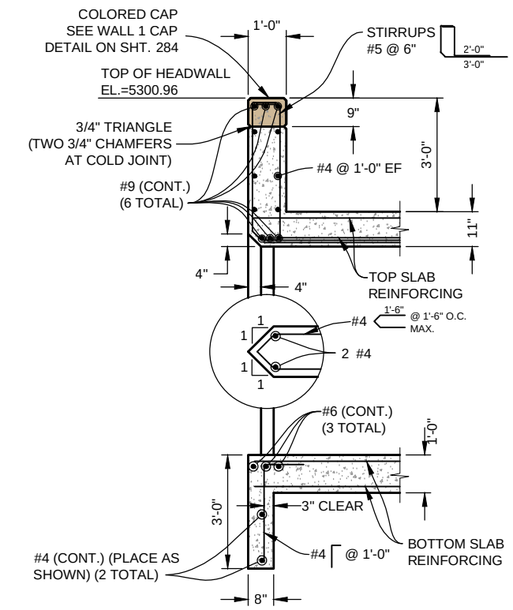

SECTION C

0' 1' 2' 4'
SCALE: 1/4" = 1'-0"

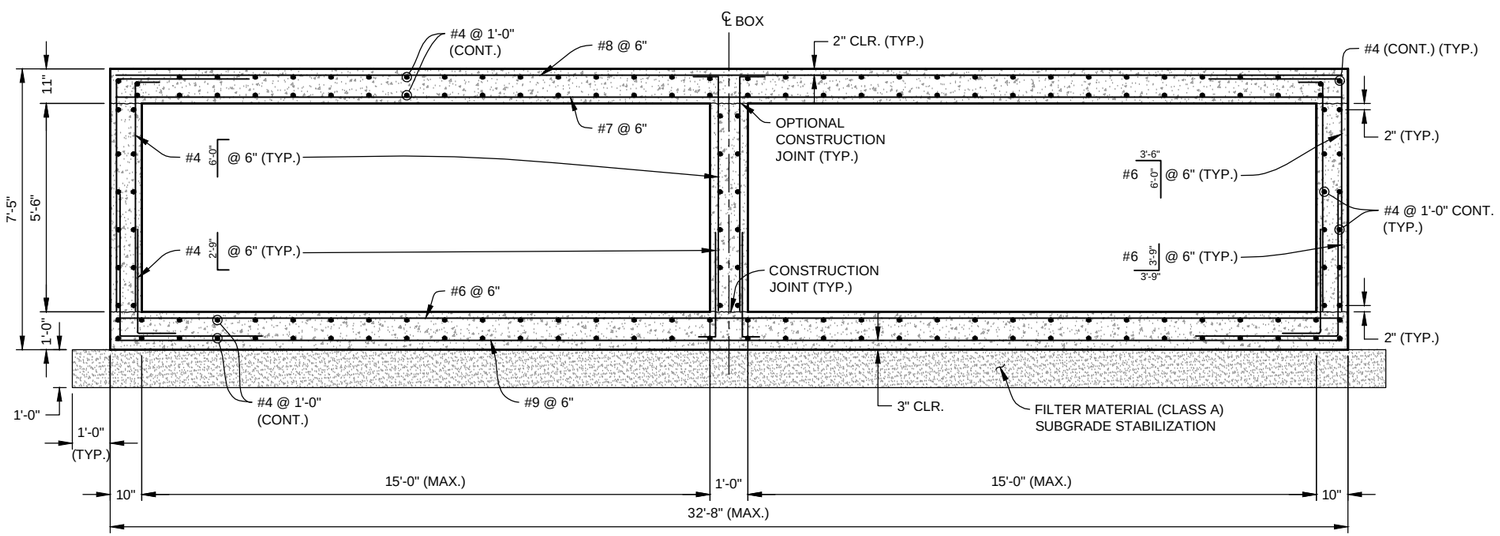

SECTION B

0' 1' 2' 4'
SCALE: 1/4" = 1'-0"

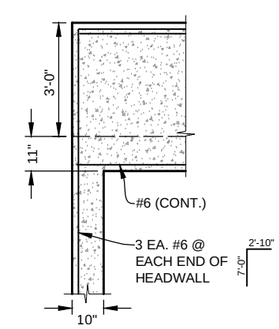

SECTION D

0' 1' 2' 4'
SCALE: 1/4" = 1'-0"

Computer File Information			
Creation Date: 09/15/14	Initials: JHK		
Last Modification Date: 06/18/15	Initials: JHK		
Full Path: P:\11-039.03\CAD			
Drawing File Name: 11-039.03_STR IRIS CBC DET.dwg			
AutoCAD 2014	Scale: AS SHOWN		

MULLER ENGINEERING CO., INC.
CONSULTING ENGINEERS
777 S. WADSWORTH BLVD. 4-100
LAKEWOOD, COLORADO 80226
(303) 988-4939
MULLER
MEC PROJECT NO. 11039.03

COLORADO REGISTERED 32038 PROFESSIONAL ENGINEER 6-18-15

Sheet Revisions		
Date:	Comments	Init.

As Constructed
No Revisions:
Revised:
Void:

Region 4 RDM
CITY OF BOULDER

WONDERLAND CREEK - GREENWAYS IMPROVEMENT PROJECT

IRIS BOX CULVERT INLET DETAILS

Designer:	KMA	Structure Numbers	
Detailer:	JHK		
Sheet Subset: DRAINAGE		Subset Sheets:	IBC-5

Project No./Code
STM 110-081
18405
Sheet Number: 151

PLOTTED: 6/19/2015 10:55:42 AM
NAME: P:\11-039.03 WONDERLAND CREEK LOWER REACH -FINAL DESIGN\CAD\11-039.03_STR IRIS CBC DET.DWG

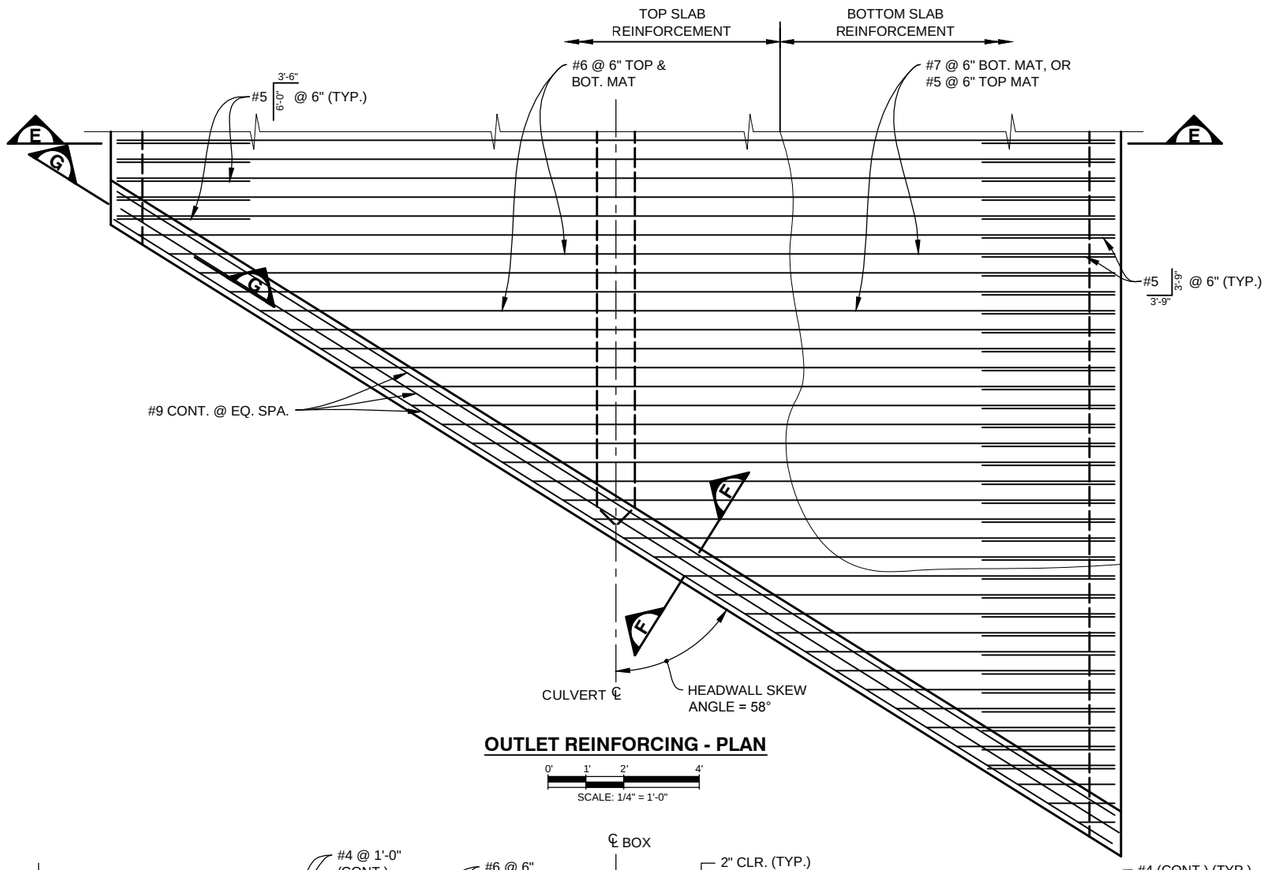

OUTLET REINFORCING - PLAN

0' 1' 2' 4'
SCALE: 1/4" = 1'-0"

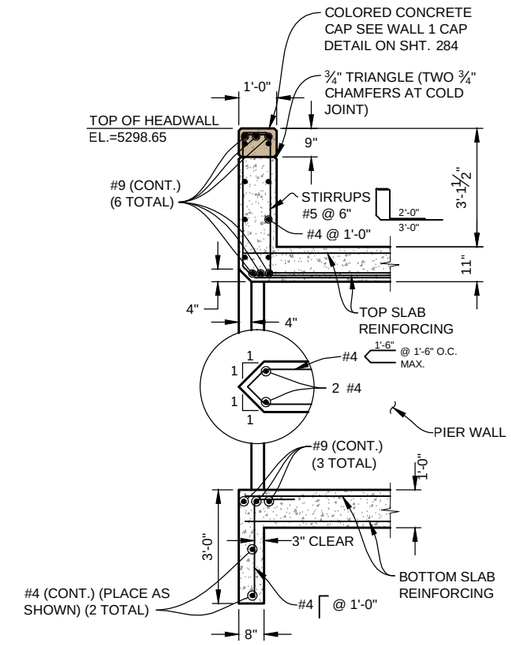

SECTION F

0' 1' 2' 4'
SCALE: 1/4" = 1'-0"

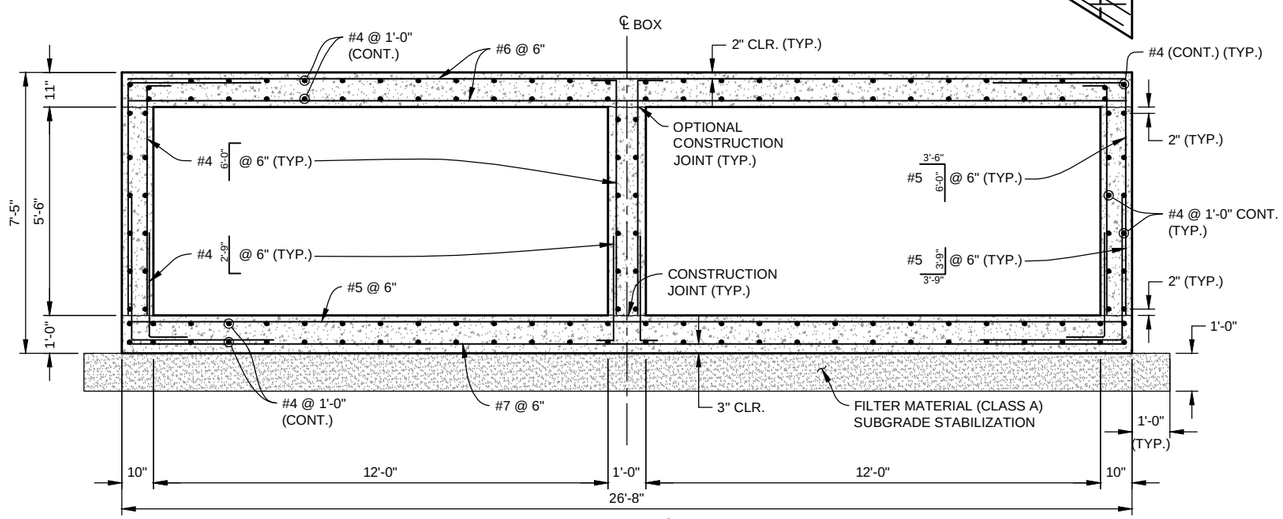

SECTION E

0' 1' 2' 4'
SCALE: 1/4" = 1'-0"

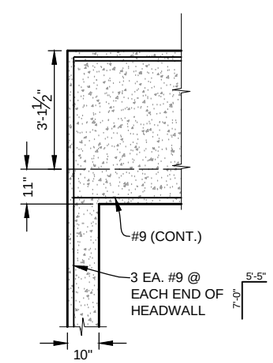

SECTION G

0' 1' 2' 4'
SCALE: 1/4" = 1'-0"

Computer File Information		
Creation Date: 09/15/14	Initials: JHK	
Last Modification Date: 06/18/15	Initials: JHK	
Full Path: P:\11-039.03\CAD		
Drawing File Name: 11-039.03_STR IRIS CBC DET.dwg		
AutoCAD 2014	Scale: AS SHOWN	

MULLER ENGINEERING CO., INC.
MULLER
CONSULTING ENGINEERS
777 S. WADSWORTH BLVD. 4-100
LAKEWOOD, COLORADO 80226
(303) 988-4939

MEC PROJECT NO. 11039.03

REGISTERED PROFESSIONAL ENGINEER 32038 6-18-15

Sheet Revisions		
Date:	Comments	Init.

As Constructed
No Revisions:
Revised:
Void:

Region 4 RDM

CITY OF BOULDER

WONDERLAND CREEK - GREENWAYS IMPROVEMENT PROJECT

IRIS BOX CULVERT OUTLET DETAILS

Designer:	KMA	Structure Numbers	
Detailer:	JHK		
Sheet Subset:	DRAINAGE	Subset Sheets:	IBC-6

Project No./Code
STM 110-081
18405
Sheet Number: 152

PLOTTED: 6/19/2015 10:55:47 AM
NAME: P:\11-039.03 WONDERLAND CREEK LOWER REACH -FINAL DESIGN\CAD\11-039.03_STR IRIS CBC DET.DWG

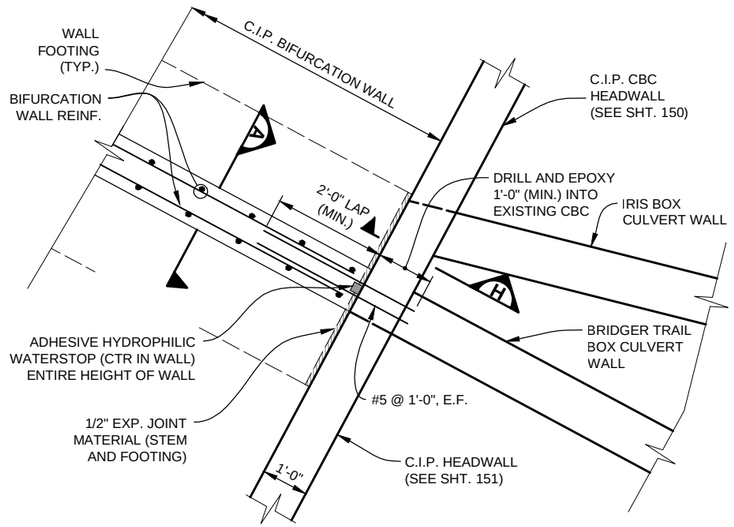

BIFURCATION WALL CONNECTION PLAN
(SEE SHEET 150 FOR LOCATION)
0' 6" 1' 2'
SCALE: 3/8" = 1'-0"

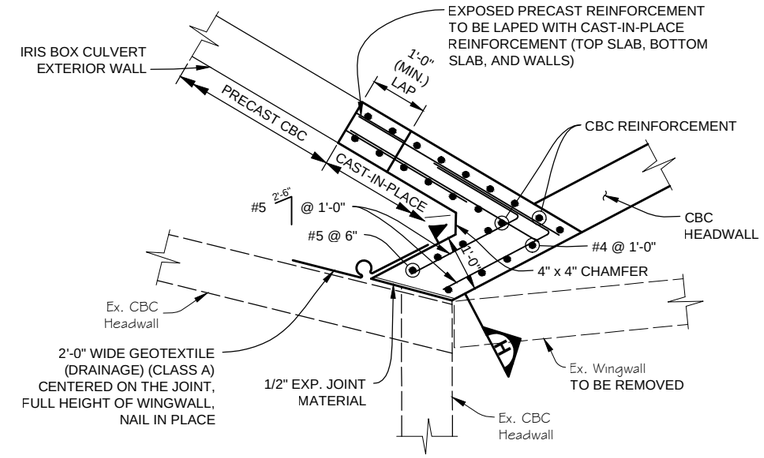

CULVERT CONNECTION PLAN
(SEE SHEET 150 FOR LOCATION)
0' 6" 1' 2'
SCALE: 3/8" = 1'-0"

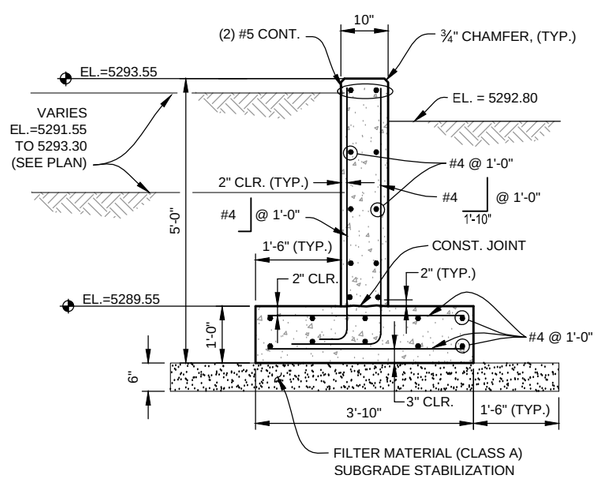

BIFURCATION WALL TYPICAL SECTION A
(LOOKING EAST) SHT. 150, 153
0' 6" 1' 2'
SCALE: 3/8" = 1'-0"

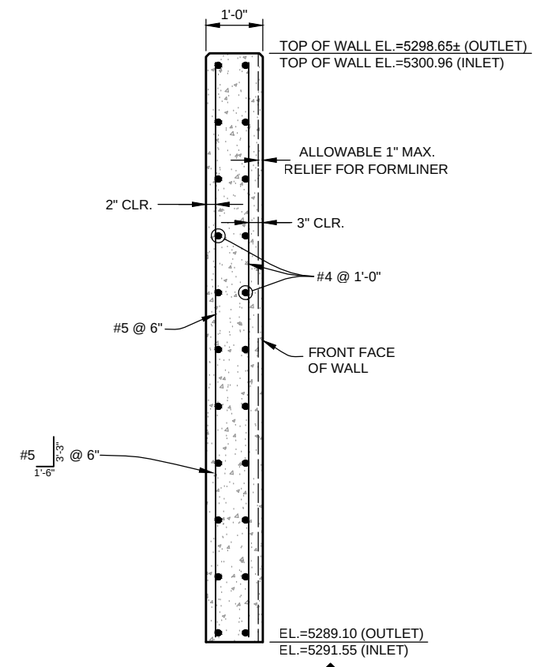

SECTION H-H H
0' 6" 1' 2'
SCALE: 3/8" = 1'-0"

Computer File Information			
Creation Date: 09/15/14	Initials: JHK	MULLER ENGINEERING CO., INC.	
Last Modification Date: 06/18/15	Initials: JHK	MULLER — CONSULTING ENGINEERS, 777 S. WADSWORTH BLVD. 4-100, LAKEWOOD, COLORADO 80226, (303) 988-4939	
Full Path: P:\11-039.03\CAD			
Drawing File Name: 11-039.03_STR IRIS CBC DET.dwg			
AutoCAD 2014	Scale: AS SHOWN	MEC PROJECT NO. 11039.03	

Sheet Revisions		
Date:	Comments	Init.

As Constructed
No Revisions:
Revised:
Void:

Region 4 RDM

CITY OF BOULDER

WONDERLAND CREEK - GREENWAYS IMPROVEMENT PROJECT

IRIS BOX CULVERT DETAILS

Designer:	KMA	Structure Numbers	
Detailer:	JHK		
Sheet Subset:	DRAINAGE	Subset Sheets:	IBC-7

Project No./Code
STM 110-081
18405
Sheet Number: 153

PLOTTED: 6/19/2015 10:55:51 AM
NAME: P:\11-039.03 WONDERLAND CREEK LOWER REACH -FINAL DESIGN\CAD\11-039.03_STR IRIS CBC DET.DWG

STRUCTURAL NOTES:

1. EXCEPT AS SHOWN IN THE PLANS, STRUCTURE EXCAVATION AND BACKFILL SHALL BE IN ACCORDANCE WITH M-206-1 FOR CAST-IN-PLACE RETAINING WALLS.
2. EXPANSION JOINT MATERIAL SHALL MEET AASHTO SPECIFICATION M213.
3. GRADE 60 REINFORCING STEEL IS REQUIRED.
4. ALL REINFORCING STEEL SHALL BE BLACK REINFORCING UNLESS OTHERWISE NOTED.
5. (E) DENOTES EPOXY COATED REINFORCING STEEL.
6. THE FOLLOWING TABLE GIVES THE MINIMUM CLASS B LAP SPLICE LENGTH FOR EPOXY COATED REINFORCING BARS PLACED IN ACCORDANCE WITH SUBSECTION 602.06. THESE SPLICE LENGTHS SHALL BE INCREASED BY 25% FOR BARS SPACED AT LESS THAN 6" ON CENTER.

BAR SIZE	#4	#5	#6	#7	#8	#9	#10	#11
SPLICE LENGTH FOR CLASS D CONCRETE	1'-3"	1'-7"	2'-5"	2'-10"	3'-8"	4'-8"	5'-11"	7'-3"

7. WHEN THE CONTRACTOR ELECTS TO SUBSTITUTE EPOXY COATED REINFORCEMENT FOR BLACK REINFORCING BARS, THE MINIMUM LAP SPLICE SHALL BE AS DESCRIBED ABOVE.
8. THE FOLLOWING TABLE GIVES THE MINIMUM CLASS B LAP SPLICE LENGTH FOR BLACK REINFORCING BARS PLACED IN ACCORDANCE WITH SUBSECTION 602.06. THESE SPLICE LENGTHS SHALL BE INCREASED BY 25% FOR BARS SPACED AT LESS THAN 6" ON CENTER.

BAR SIZE	#4	#5	#6	#7	#8	#9	#10	#11
SPLICE LENGTH FOR CLASS D CONCRETE	1'-1"	1'-4"	1'-7"	1'-11"	2'-6"	3'-1"	3'-11"	4'-10"

9. THE CONTRACTOR SHALL BE RESPONSIBLE FOR THE STABILITY OF THE STRUCTURE DURING CONSTRUCTION.

E.F. = EACH FACE	T.O. = TOP OF	T.O.W. = TOP OF WALL	B.F. = BACK FACE
B.O. = BOTTOM OF	BRG. = BEARING	F.F. = FRONT FACE	O.C. = ON CENTER

10. PERMANENT STEEL DECK FORMS ARE ALLOWED.
11. THE INFORMATION SHOWN ON THESE PLANS CONCERNING THE TYPE AND LOCATION OF UNDERGROUND UTILITIES IS NOT GUARANTEED TO BE ACCURATE OR ALL INCLUSIVE. THE CONTRACTOR IS RESPONSIBLE FOR MAKING HIS OWN DETERMINATION AS TO THE TYPE AND LOCATION OF UNDERGROUND UTILITIES AS MAY BE NECESSARY TO AVOID DAMAGE THERETO. THE CONTRACTOR SHALL CONTACT THE UTILITY NOTIFICATION CENTER OF COLORADO AT 1-800-922-1987 AT LEAST 2 DAYS (NOT INCLUDING THE DAY OF NOTIFICATION) PRIOR TO ANY EXCAVATION OR OTHER EARTHWORK.
12. STRUCTURAL STEEL: HSS SECTIONS: ASTM A847 Fy = 50,000 psi
    OTHER SHAPES: ASTM A588 Fy = 50,000 psi
    PLATES AND BARS: ASTM A588 Fy = 50,000 psi
13. DESIGN DATA

    LRFD GUIDE SPECIFICATIONS FOR THE DESIGN OF PEDESTRIAN BRIDGES (2009)

    AASHTO LRFD Bridge Design Specifications 2012 (6th Edition) 2013 INTERIMS

    DESIGN METHOD: LOAD AND RESISTANCE FACTOR DESIGN

    PEDESTRIAN LIVE LOAD: 90 PSF

    VEHICULAR LIVE LOAD: H10 TRUCK

    WIND LOAD: PER AASHTO LRFD

    DEAD LOAD: ASSUMES 1000 LBS PER LIN. FT. FOR CONCRETE BRIDGE DECK.

    REINFORCED CONCRETE:

    CLASS D CONCRETE: f'c = 4,500 psi
    REINFOCING STEEL: fy = 60,000 psi

    CAISSON CONCRETE:

    CLASS BZ CONCRETE: f'c = 4,000 psi
    REINFORCING STEEL: fy = 60,000 psi

14. THE USE OF TEMPORARY CASING AND DEWATERING DURING CAISSON CONSTRUCTION MAY BE REQUIRED.
15. THE SOILS AND FOUNDATION INVESTIGATION FOR THE CONCRETE BOX CULVERT AND WINGWALLS WAS PERFORMED BY CTL THOMPSON, INC. THE SUB SURFACE CONDITIONS AND RECOMMENDATIONS FOR THE STRUCTURE ARE CONTAINED IN A REPORT DATED JULY 3, 2013, PROJ NO DN46,599-125. REFER TO THE PROJECT SPECIFICATIONS FOR COPIES OF THE REPORT.
16. CONTRACTOR SHALL BE RESPONSIBLE IN COORDINATING WITH PREFABRICATED BRIDGE MANUFACTURER AND VERIFYING ALL DIMENSIONS SHOWN ON THE PLAN INCLUDING ABUTMENT SEATS, LOCATION AND DIMENSIONS OF ANCHOR BOLTS PRIOR TO THE CONSTRUCTION OF THE BRIDGE ABUTMENTS.
17. ALL STRUCTURAL STEEL ELEMENTS OF THE PREFABRICATED PEDESTRIAN BRIDGE SHALL BE POWDER COATED BLACK.

811 Know what's below Call before you dig.

PLOTTED: 7/2/2015 10:33:14 AM
NAME: P:\11-039.03 WONDERLAND CREEK LOWER REACH -FINAL DESIGN\CAD\11-039.03_PED BRG INFO.DWG

Computer File Information	
Creation Date: 05/30/15	Initials: JHK
Last Modification Date: 06/18/15	Initials: JHK
Full Path: P:\11-039.03\CAD	
Drawing File Name: 11-039.03_PED BRG INFO.dwg	
AutoCAD 2014	Scale: AS SHOWN

MULLER ENGINEERING CO., INC.
MULLER
CONSULTING ENGINEERS
777 S. WADSWORTH BLVD. 4-100
LAKEWOOD, COLORADO 80226
(303) 988-4939

MEC PROJECT NO. 11039.03

COLORADO REGISTERED KEVIN M. NAREGO 32038 6-18-15 PROFESSIONAL ENGINEER

Sheet Revisions		
Date:	Comments	Init.

As Constructed
No Revisions:
Revised:
Void:

GREAT DRAINAGE AND FLOOD CONTROL DISTRICT

CO CDOT Region 4 RDM

CITY OF BOULDER

WONDERLAND CREEK - GREENWAYS IMPROVEMENT PROJECT
KALIMIA PEDESTRIAN BRIDGE
GENERAL INFORMATION

Designer:	KMA	Structure Numbers	
Detailer:	JHK		
Sheet Subset:	DRAINAGE	Subset Sheets:	KP-1

Project No./Code
STM 110-081
18405
Sheet Number: 154

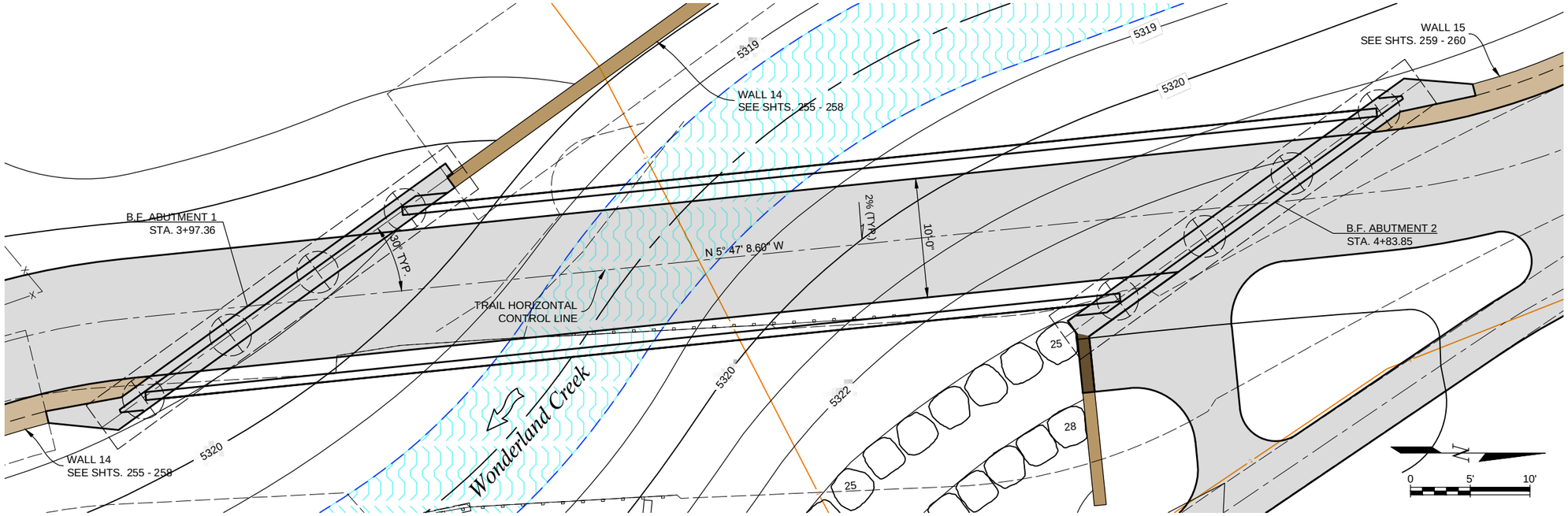

PLAN

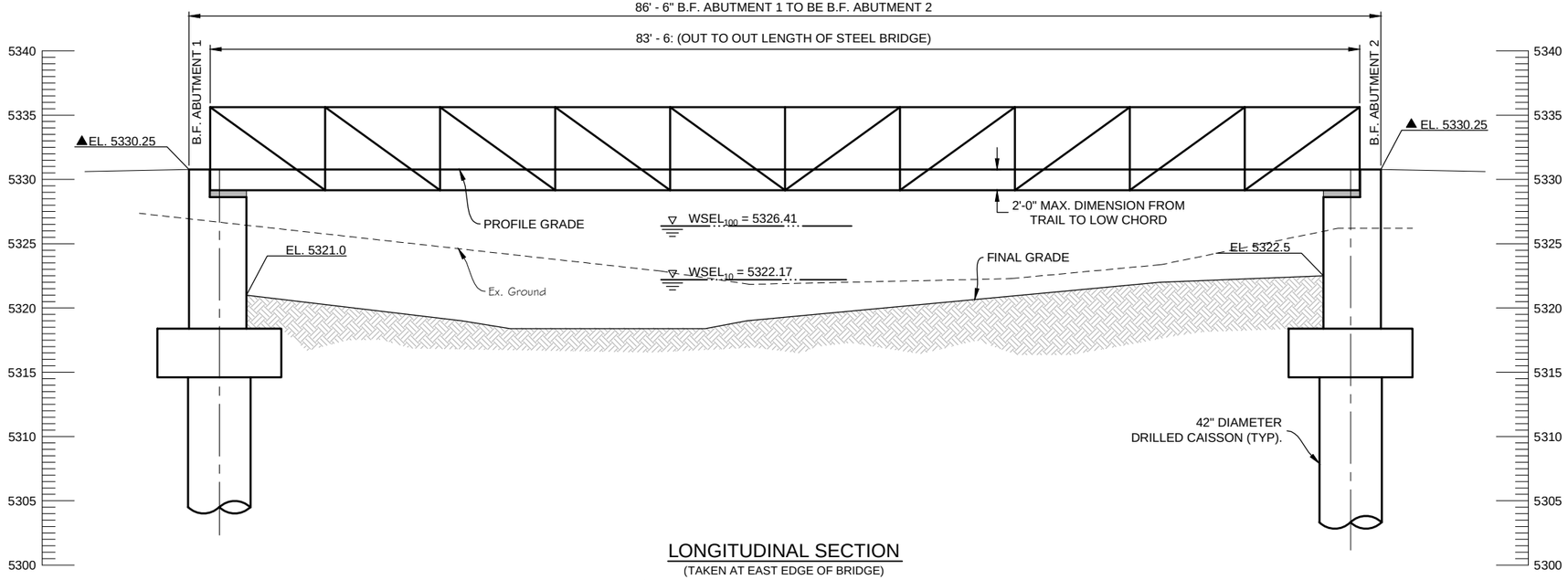

LONGITUDINAL SECTION

(TAKEN AT EAST EDGE OF BRIDGE)

▲ ELEVATION SHOWN AT PROFILE GRADE LINE

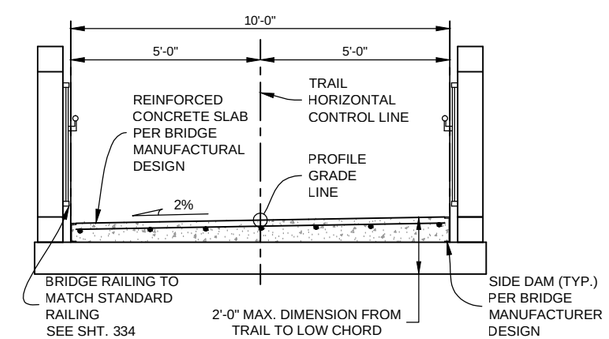

TYPICAL SECTION

Computer File Information		Sheet Revisions			As Constructed	WONDERLAND CREEK - GREENWAYS IMPROVEMENT PROJECT	Project No./Code
Creation Date: 11/14/14	Initials: JHK	Date:	Comments	Init.	No Revisions:	KALMIA PEDESTRIAN BRIDGE DETAILS	STM 110-081
Last Modification Date: 06/18/15	Initials: JHK				Revised:	Designer: KMA / Structure Numbers	18405
Full Path: P:\11-039.03\CAD					Void:	Detailer: JHK	
Drawing File Name: 11-039.03_PED BRG DET.dwg						Sheet Subset: DRAINAGE / Subset Sheets: KP-2	Sheet Number: 155
AutoCAD 2014	Scale: AS SHOWN						

MULLER ENGINEERING CO., INC.
CONSULTING ENGINEERS
777 S. WADSWORTH BLVD. 4-100
LAKEWOOD, COLORADO 80226
(303) 988-4939
MULLER
MEC PROJECT NO. 11039.03

COLORADO REGISTERED PROFESSIONAL ENGINEER 32038 6-18-15

Region 4 RDM

CITY OF BOULDER

PLOTTED: 7/2/2015 10:33:50 AM
NAME: P:\11-039.03 WONDERLAND CREEK LOWER REACH -FINAL DESIGN\CAD\11-039.03_PED BRG DET.DWG

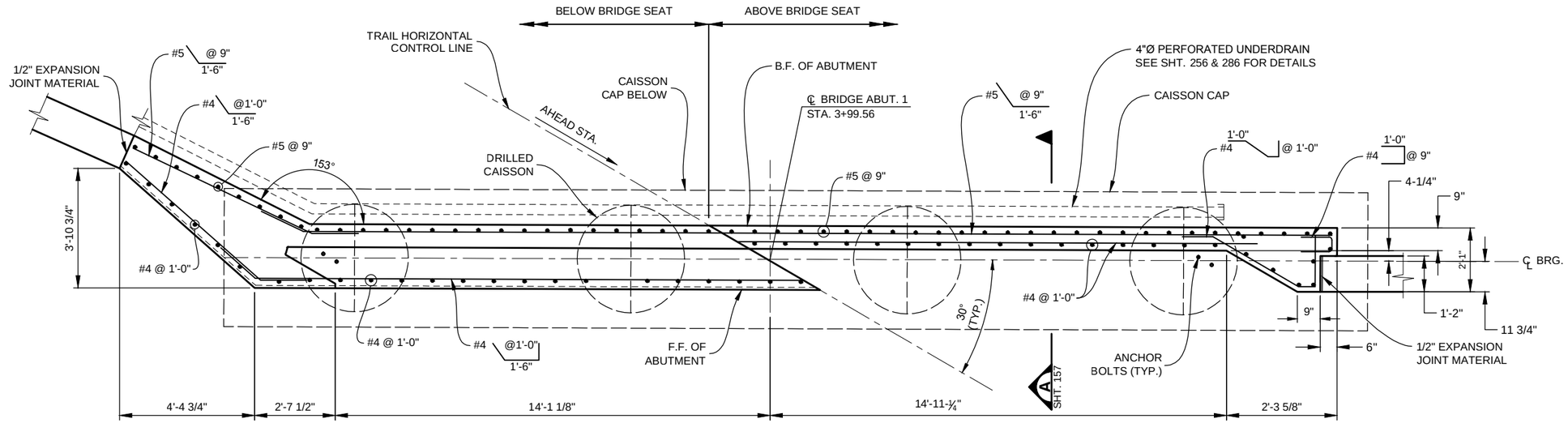

PLAN - ABUT. 1

0' 1' 2' 4'
SCALE: 1" = 2'-0"

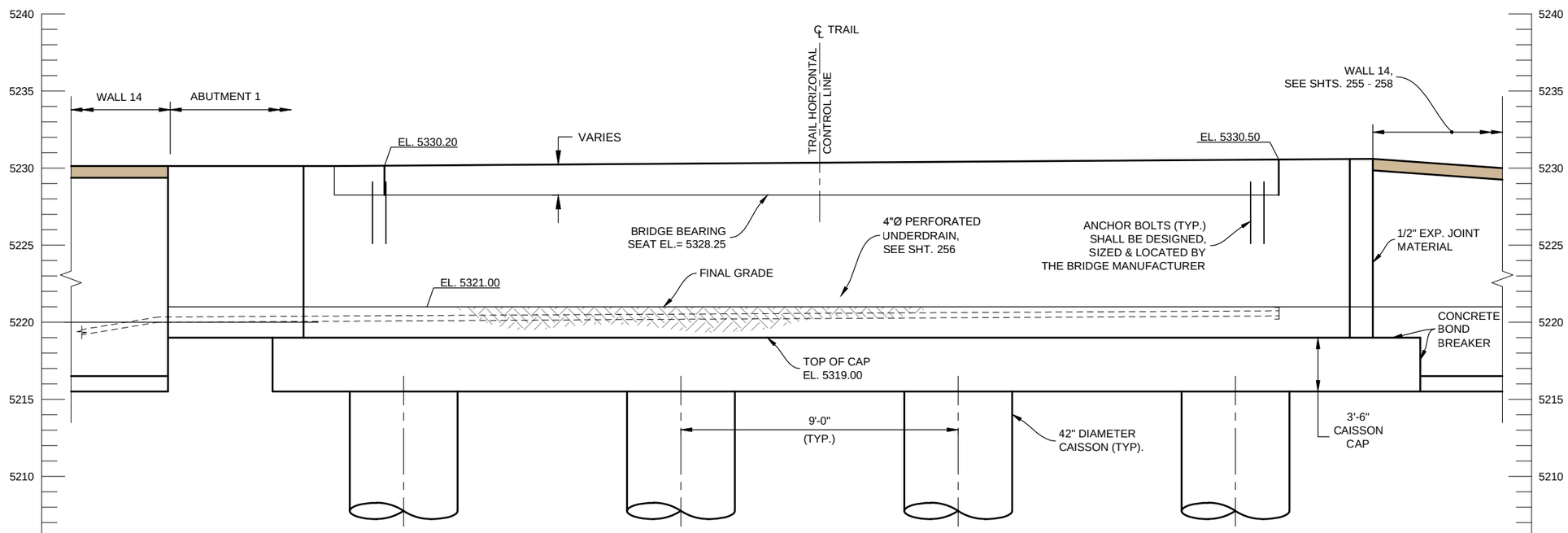

ELEVATION ABUT. 1

0' 1' 2' 4'
SCALE: 1" = 2'-0"

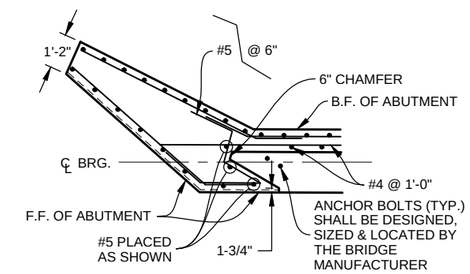

ABUTMENT 1 DETAIL WINGWALL DETAIL

0' 1' 2' 4'
SCALE: 1" = 2'-0"

NOTES:

1. FOR SECTION A-A SEE SHEET 157.
2. ALL CONCRETE SHALL BE CDOT CLASS D.
3. ALL REINFORCING STEEL SHALL BE GRADE 60 KSI.
4. FOR WINGWALL TYPICAL SECTION, SEE SHEET 158.

Computer File Information		
Creation Date: 11/14/14	Initials: JHK	
Last Modification Date: 06/18/15	Initials: JHK	
Full Path: P:\11-039.03\CAD		
Drawing File Name: 11-039.03_PED BRG DET.dwg		
AutoCAD 2014	Scale: AS SHOWN	

MULLER ENGINEERING CO., INC.
MULLER
CONSULTING ENGINEERS
777 S. WADSWORTH BLVD. 4-100
LAKEWOOD, COLORADO 80226
(303) 988-4939
MEC PROJECT NO. 11039.03

REGISTERED 32038 PROFESSIONAL ENGINEER 6-18-15

Sheet Revisions		
Date:	Comments	Init.

As Constructed
No Revisions:
Revised:
Void:

Region 4 RDM

CITY OF BOULDER

WONDERLAND CREEK - GREENWAYS IMPROVEMENT PROJECT

KALMIA PEDESTRIAN BRIDGE DETAILS

Designer:	KMA	Structure Numbers	
Detailer:	JHK		
Sheet Subset:	DRAINAGE	Subset Sheets:	KP-3

Project No./Code
STM 110-081
18405
Sheet Number: 156

PLOTTED: 6/19/2015 10:56:50 AM
NAME: P:\11-039.03 WONDERLAND CREEK LOWER REACH -FINAL DESIGN\CAD\11-039.03_PED BRG DET.DWG

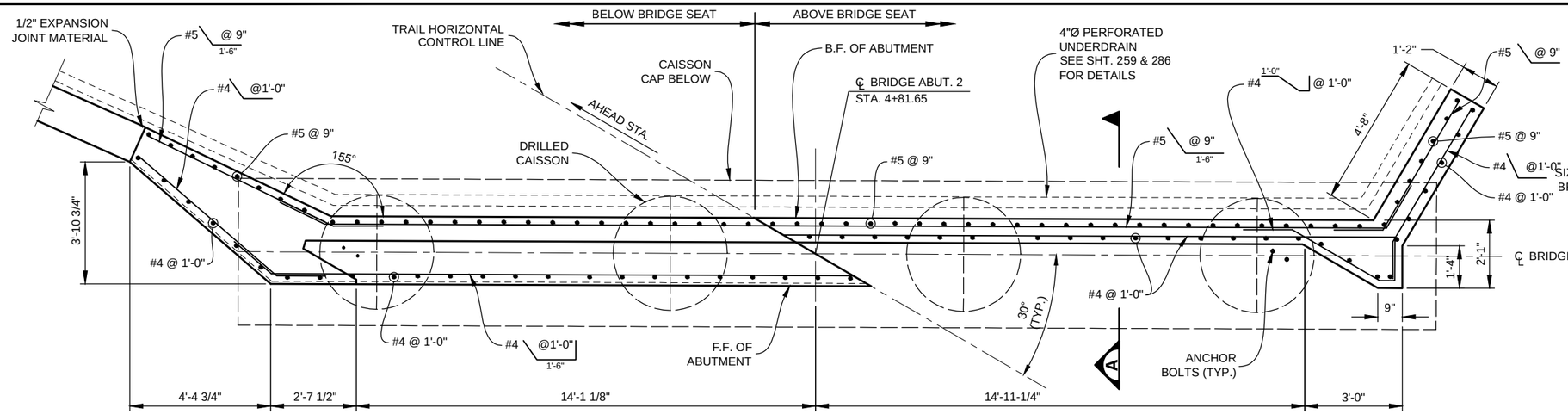

PLAN - ABUT. 2

0' 1' 2' 4'
SCALE: 1" = 2'-0"

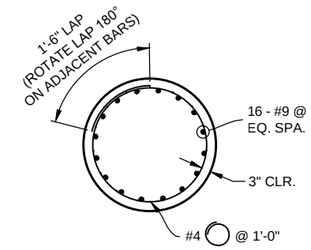

SECTION B

0 5' 10'
SCALE: 1" = 5'

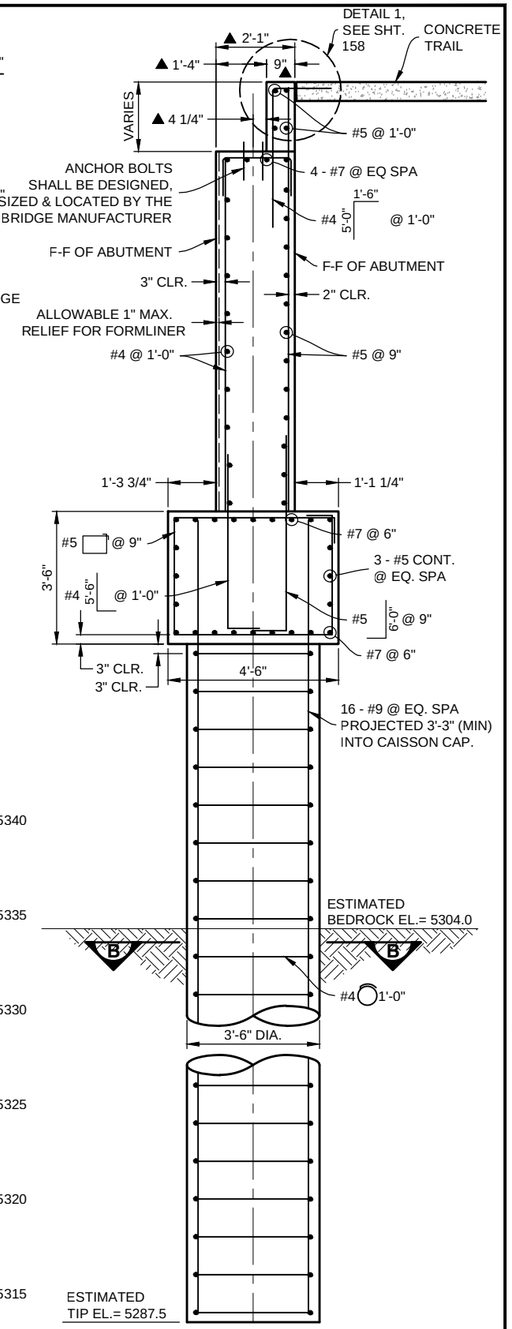

SECTION A

SHT. 156, 157
0 2' 4'
SCALE: 1" = 2'

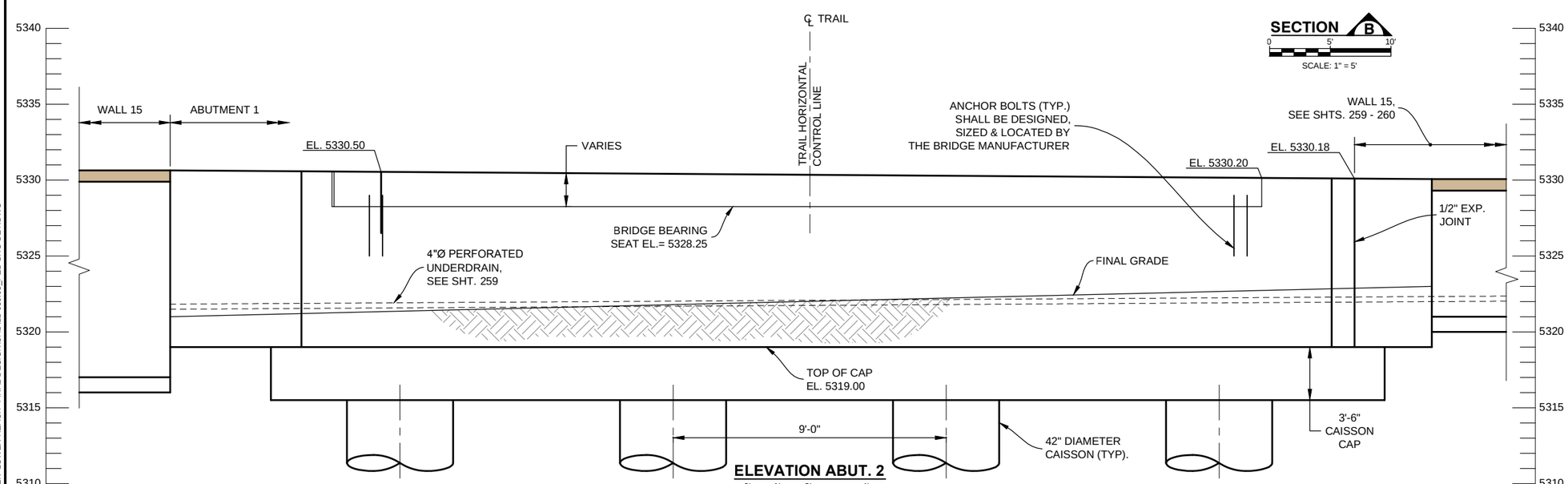

ELEVATION ABUT. 2

0' 1' 2' 4'
SCALE: 1" = 2'-0"

Computer File Information		
Creation Date: 11/14/14	Initials: JHK	
Last Modification Date: 06/18/15	Initials: JHK	
Full Path: P:\11-039.03\CAD		
Drawing File Name: 11-039.03_PED BRG DET.dwg		
AutoCAD 2014	Scale: AS SHOWN	

MULLER ENGINEERING CO., INC.
CONSULTING ENGINEERS
777 S. WADSWORTH BLVD. 4-100
LAKEWOOD, COLORADO 80226
(303) 988-4939
MULLER
MEC PROJECT NO. 11039.03

COLORADO REGISTERED 32038 PROFESSIONAL ENGINEER 6-18-15

Sheet Revisions		
Date:	Comments	Init.

As Constructed
No Revisions:
Revised:
Void:

DRAINAGE AND FLOOD CONTROL DISTRICT
CDOT Region 4 RDM
CITY OF BOULDER

WONDERLAND CREEK - GREENWAYS IMPROVEMENT PROJECT
KALMIA PEDESTRIAN BRIDGE DETAILS

Designer:	KMA	Structure Numbers	
Detailer:	JHK		
Sheet Subset:	DRAINAGE	Subset Sheets:	KP-4

Project No./Code
STM 110-081
18405
Sheet Number: 157

PLOTTED: 6/19/2015 10:56:58 AM
NAME: P:\11-039.03 WONDERLAND CREEK LOWER REACH -FINAL DESIGN\CAD\11-039.03_PED BRG DET.DWG

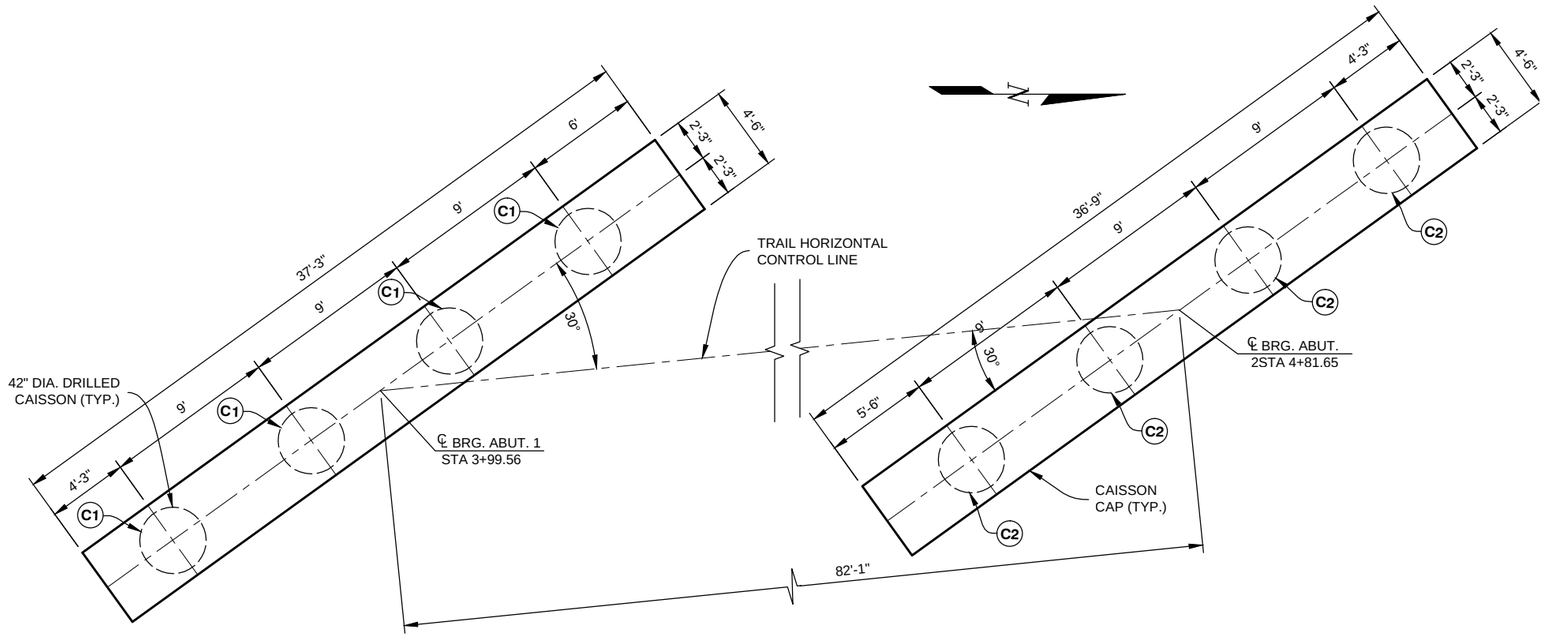

CAISSON LAYOUT

0' 2' 4' 8'

SCALE: 1/8" = 1'-0"

Caisson Schedule

Caisson No.	DIAMETER	TOP OF CAISSON ELEVATION	ESTIMATED TIP ELEVATION	CAISSON LENGTH	DESIGN SERVICE LOAD
C1	42"	5315.5	5287.5	28'	283 kip
C2	42"	5315.5	5287.5	28'	283 kip

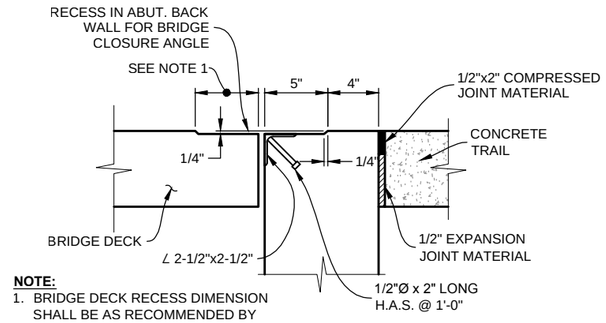

NOTE:

1. BRIDGE DECK RECESS DIMENSION SHALL BE AS RECOMMENDED BY THE BRIDGE MANUFACTURER.
2. ANGLE ASSEMBLY SHALL BE GALVANIZED AFTER FABRICATION.

DETAIL 1 (SEE SECTION A ON SHT. 157)

SCALE: N.T.S.

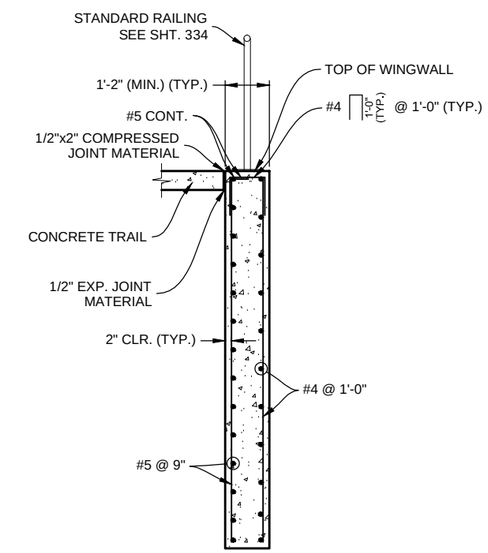

WINGWALL-TYPICAL SECTION

0' 1' 2' 4'

SCALE: 1" = 2'-0"

Computer File Information		
Creation Date: 11/14/14	Initials: JHK	
Last Modification Date: 06/18/15	Initials: JHK	
Full Path: P:\11-039.03\CAD		
Drawing File Name: 11-039.03_PED BRG DET.dwg		
AutoCAD 2014	Scale: AS SHOWN	

MULLER ENGINEERING CO., INC.
CONSULTING ENGINEERS
777 S. WADSWORTH BLVD. 4-100
LAKEWOOD, COLORADO 80226
(303) 988-4939
MULLER
MEC PROJECT NO. 11039.03

COLORADO REGISTERED PROFESSIONAL ENGINEER 32038 6-18-15

Sheet Revisions		
Date:	Comments	Init.

As Constructed
No Revisions:
Revised:
Void:

Region 4 RDM

CITY OF BOULDER

WONDERLAND CREEK - GREENWAYS IMPROVEMENT PROJECT

KALMIA PEDESTRIAN BRIDGE DETAILS

Designer:	KMA	Structure Numbers	
Detailer:	JHK		
Sheet Subset:	DRAINAGE	Subset Sheets:	KP-5

Project No./Code
STM 110-081
18405
Sheet Number: 158

PLOTTED: 6/19/2015 10:57:04 AM
NAME: P:\11-039.03 WONDERLAND CREEK LOWER REACH -FINAL DESIGN\CAD\11-039.03_PED BRG DET.DWG

STRUCTURE GENERAL NOTES

1. ALL WORK SHALL BE DONE IN ACCORDANCE WITH THE COLORADO DEPARTMENT OF TRANSPORTATION (CDOT) STANDARD SPECIFICATIONS FOR ROAD AND BRIDGE CONSTRUCTION, 2011 EDITION, AS APPLICABLE TO THE PROJECT.
2. STRUCTURE EXCAVATION AND BACKFILL SHALL BE IN ACCORDANCE WITH CDOT STANDARD PLANS, M&S STANDARDS M-206-1, UNLESS OTHERWISE NOTED ON PLANS.
3. STRUCTURE BACKFILL FOR THE BOX CULVERT AND WINGWALLS SHALL CONFORM TO STRUCTURE BACKFILL (CLASS 1) SPECIFICATIONS, AND SHALL BE PLACED IN ACCORDANCE WITH CDOT SPECIFICATIONS, SECTION 206.
4. THE SOILS AND FOUNDATION INVESTIGATION FOR THE CONCRETE BOX CULVERT AND WINGWALLS WAS PERFORMED BY CTL THOMPSON, INC. THE SUB SURFACE CONDITIONS AND RECOMMENDATIONS FOR THE STRUCTURE ARE CONTAINED IN A REPORT DATED JULY 3, 2013, PROJ NO. DN46,599-125. REFER TO THE SPECIFICATIONS FOR COPIES OF THESE REPORTS.
5. THE BOTTOM SLAB OF THE BOX CULVERT, AND THE WINGWALL FOOTINGS SHALL NOT BE PLACED UNTIL SUBGRADE IS OBSERVED AND APPROVED IN WRITING BY THE ENGINEER.
6. EXPANSION JOINT MATERIAL SHALL MEET AASHTO SPECIFICATION M-213.
7. THE COST FOR EXPANSION JOINT MATERIAL SHALL NOT BE PAID FOR SEPARATELY BUT SHALL BE INCLUDED IN THE WORK.
8. WATER STOPS SHALL MEET THE REQUIREMENTS OF CDOT SPECIFICATIONS, SECTION 518.
9. STRUCTURAL CONCRETE EXPOSED TO SOIL SHALL CONFORM TO CEMENTITIOUS MATERIALS REQUIREMENTS CLASS 0 CORRESPONDING TO SULFATE EXPOSURE CLASS 0.
10. ALL CONCRETE SHALL BE CLASS D (BOX CULVERT)
11. ALL CONSTRUCTION JOINTS SHALL BE THOROUGHLY CLEANED AND ROUGHENED BEFORE FRESH CONCRETE IS PLACED.
12. ALL CONSTRUCTION JOINTS NOT SHOWN ON THE PLANS SHALL BE APPROVED BY THE ENGINEER.
13. WINGWALL FOOTINGS AND BOTTOM SLAB OF BOX CULVERT SHALL BE PLACED MONOLITHICALLY.
14. THE CONTRACTOR SHALL BE RESPONSIBLE FOR THE STABILITY OF THE STRUCTURE DURING CONSTRUCTION.
15. THE CONTRACTOR SHALL NOT BACKFILL STRUCTURES UNTIL TOP SLAB AND WALLS HAVE REACHED 80% OF DESIGN STRENGTH.
16. ALL EXPOSED CONCRETE CORNERS SHALL BE CHAMFERED 3/4", UNLESS SHOWN OR OTHERWISE NOTED.
17. GRADE 60 REINFORCING STEEL IS REQUIRED.
18. ALL REINFORCING STEEL SHALL BE BLACK REINFORCING BARS UNLESS OTHERWISE NOTED.
19. THE FOLLOWING TABLE GIVES THE MINIMUM CLASS B LAP SPLICE LENGTH FOR BLACK (NON-EPOXY COATED) REINFORCING BARS PLACED IN ACCORDANCE WITH SUBSECTION 602.06, THESE SPLICE LENGTH SHALL INCREASE BY 25% FOR BARS SPACED LESS THAN 6" ON CENTER.

BAR SIZE:	#4	#5	#6	#7	#8	#9	#10	#11
SPLICE LENGTH FOR CLASS D CONCRETE:	1'-0"	1'-4"	1'-7"	1'-11"	2'-6"	3'-1"	3'-11"	4'-10"

20. ALL REINFORCEMENT SHALL HAVE A CLEAR COVERAGE OF 2", EXCEPT AS SHOWN ON THE PLANS. CLEAR COVERAGE SHALL BE MEASURED FROM THE SURFACE OF THE CONCRETE TO THE OUTSIDE OF THE REINFORCEMENT.
21. THE STOCK LENGTH USED FOR ALL REINFORCING IS 60 FEET.
22. ALL TRANSVERSE REINFORCING SHAIL BE NORMAL TO THE CENTERLINE OF THE BOX.
23. FILTER MATERIAL AND CLOTH FOR WINGWALL DRAIN HOLES SHALL BE INCLUDED IN WORK.
24. THE CONTRACTOR SHALL BE RESPONSIBLE FOR THE STABILITY OF THE STRUCTURE DURING CONSTRUCTION.
25. ALL DIMENSIONS ARE PERPENDICULAR TO THE CENTERLINE OF THE BOX.
26. STATIONS, ELEVATIONS, AND DIMENSIONS CONTAINED IN THESE PLANS ARE CALCULATED FROM A RECENT FIELD SURVEY. THE CONTRACTOR SHALL VERIFY ALL DEPENDENT DIMENSIONS IN THE FIELD BEFORE ORDERING OR FABRICATING ANY MATERIAL
27. THE INFORMATION SHOWN ON THESE PLANS CONCERNING-THE TYPE AND LOCATION OF UNDERGROUND UTILITIES IS NOT GUARANTEED TO BE ACCURATE OR ALL INCLUSIVE. THE CONTRACTOR IS RESPONSIBLE FOR MAKING HIS OWN DETERMINATION AS TO THE TYPE AND LOCATION OF UNDERGROUND UTILITIES AS MAY BE NECESSARY TO AVOID DAMAGE THERETO. THE CONTRACTOR SHALL CONTACT THE UTILITY NOTIFICATION CENTER OF COLORADO AT 1-800-922-1987 AT LEAST 2 DAYS (NOT INCLUDING THE DAY OF NOTIFICATION) PRIOR TO ANY EXCAVATION OR OTHER EARTHWORK.
28. A STRUCTURAL CONCRETE COATING SHALL BE APPLIED TO ALL GRAY CONCRETE (NO INTEGRAL COLOR) EXPOSED SURFACES TO 1'-0" BELOW FINAL GRADE UNLESS OTHERWISE NOTED. THE COLOR SHALL BE EQUIVALENT TO FEDERAL STANDARD 595B, COLOR NO. 33522 (LIGHT TAN). TEST PANELS SHALL BE SUBMITTED IN ACCORDANCE WITH CDOT STANDARD SPECIFICATION 601.14(B) 4.

DESIGN DATA

AASHTO LRFD 6TH EDITION, 2012

DESIGN METHOD: LOAD AND RESISTANCE FACTOR DESIGN

LOADING DATA:

LIVE LOAD = AASHTO LRFD, HL-93 TRUCK, HL-93 TANDEM, AND COLORADO PERMIT TRUCK

DEAD LOAD CASE 1: VERTICAL EARTH LOAD = 120 PCF
HORIZONTAL EARTH LOAD = 30 PCF

DEAD LOAD CASE 2: VERTICAL EARTH LOAD = 120 PCF
HORIZONTAL EARTH LOAD = 60 PCF

LIVE LOAD SURCHARGE ON EXTERIOR WALLS = 2'-0" OF EARTH

REINFORCED CONCRETE:

CLASS D CONCRETE: f' c = 4,500 psi

REINFORCING STEEL: f y = 60,000 psi

Know what's **below**
Call before you dig.

PLOTTED: 6/19/2015 10:57:18 AM
NAME: P:\11-039.03 WONDERLAND CREEK LOWER REACH - FINAL DESIGN\CAD\11-039.03_KAL UND INFO.DWG

Computer File Information	
Creation Date: 05/30/15	Initials: JHK
Last Modification Date: 06/18/15	Initials: JHK
Full Path: P:\11-039.03\CAD	
Drawing File Name: 11-039.03_KAL UND INFO.dwg	
AutoCAD 2014	Scale: AS SHOWN

MULLER ENGINEERING CO., INC.
CONSULTING ENGINEERS
777 S. WADSWORTH BLVD. 4-100
LAKEWOOD, COLORADO 80226
(303) 988-4939
MULLER
MEC PROJECT NO. 11039.03

COLORADO REGISTERED DEAN A. HARRIS 26719 PROFESSIONAL ENGINEER 6/18/15

Sheet Revisions		
Date:	Comments	Init.

As Constructed
No Revisions:
Revised:
Void:

Region 4 RDM

CITY OF BOULDER

WONDERLAND CREEK - GREENWAYS IMPROVEMENT PROJECT
KALMIA AVE. BOX CULVERT
GENERAL INFORMATION

Designer:	KMA	Structure Numbers	
Detailer:	JHK		
Sheet Subset:	DRAINAGE	Subset Sheets:	KA-1

Project No./Code
STM 110-081
18405
Sheet Number: 159

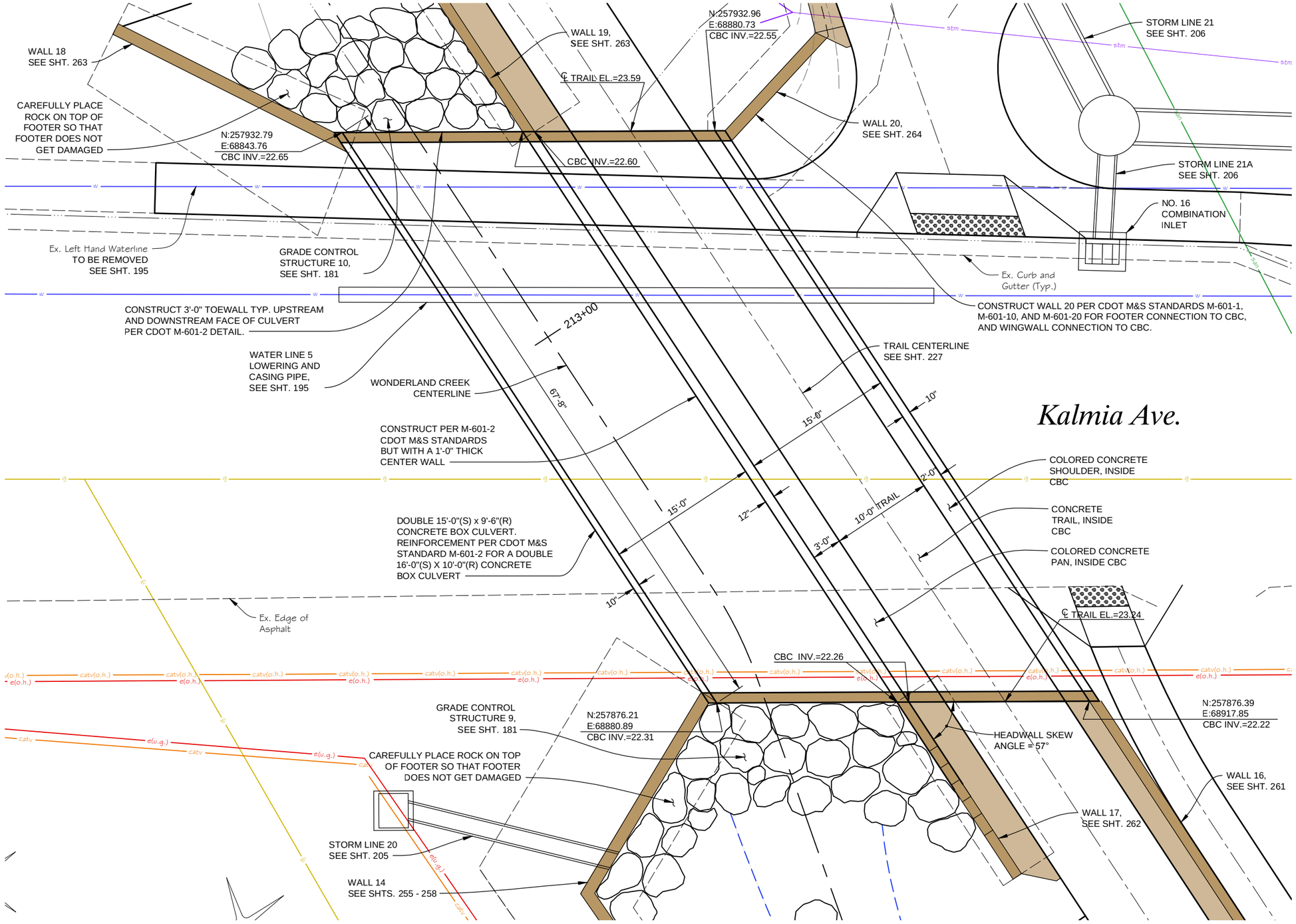

NOTES:

1. CONTRACTOR SHALL RESTORE KALMIA AVENUE TO THE EXISTING GRADES, EXISTING EDGE OF ASPHALT, EXISTING CURB AND GUTTER ALIGNMENT, AND PROPOSED SIDEWALK AND TRAIL ALIGNMENT.
2. THE CITY OF BOULDER SHALL PROVIDE ALL NECESSARY PERMANANT ROAD STRIPING. THIS WORK SHALL BE COORDINATED WITH THE CITY OF BOULDER PRIOR TO OPENING THE ROADWAY.
3. CONTRACTOR SHALL REFER TO THE LIGHTING IMPROVEMENT PLAN PRIOR TO CONSTRUCTION OF THE KALMIA AVE. BOX CULVERT. NECESSARY ADJUSTMENTS SHALL BE MADE TO THE CBC TO INCORPORATE LIGHTING.

PLOTTED: 6/19/2015 10:57:57 AM
NAME: P:\11-039.03 WONDERLAND CREEK LOWER REACH - FINAL DESIGN\CAD\11-039.03_KAL UND PLAN.DWG

Computer File Information	
Creation Date: 11/14/14	Initials: JHK
Last Modification Date: 06/18/15	Initials: JHK
Full Path: P:\11-039.03\CAD	
Drawing File Name: 11-039.03_KAL UND PLAN.dwg	
AutoCAD 2014	Scale: AS SHOWN

MULLER ENGINEERING CO., INC.
CONSULTING ENGINEERS
777 S. WADSWORTH BLVD. 4-100
LAKEWOOD, COLORADO 80226
(303) 988-4939
MULLER
MEC PROJECT NO. 11039.03

COLORADO REGISTERED PROFESSIONAL ENGINEER
DEAN A. HARRIS
26719
6/18/15

Sheet Revisions		
Date:	Comments	Init.

As Constructed
No Revisions:
Revised:
Void:

Region 4 RDM
CITY OF BOULDER

WONDERLAND CREEK - GREENWAYS IMPROVEMENT PROJECT
KALMIA AVE. BOX CULVERT PLAN

Designer:	KMA	Structure Numbers	
Detailer:	JHK		
Sheet Subset:	DRAINAGE	Subset Sheets:	KA-2

Project No./Code
STM 110-081
18405
Sheet Number: 160

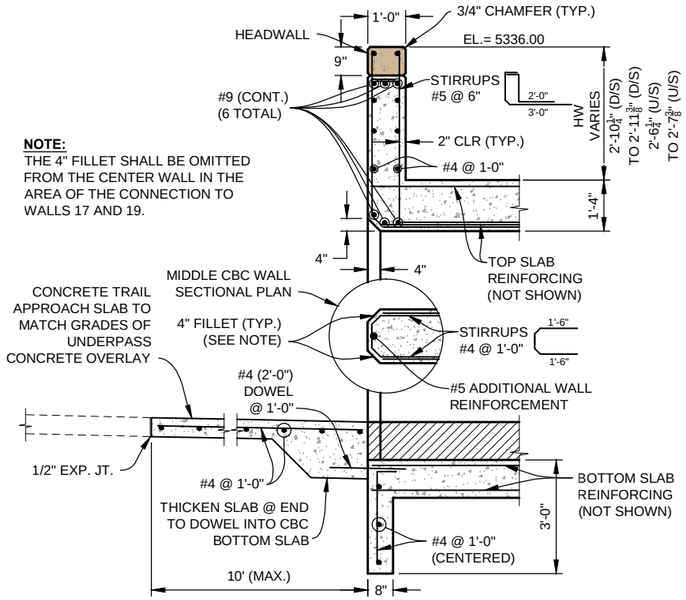

NOTE:
THE 4" FILLET SHALL BE OMITTED FROM THE CENTER WALL IN THE AREA OF THE CONNECTION TO WALLS 17 AND 19.

PEDESTRIAN UNDERPASS CBC CELL SECTION A

0' 1' 2' 4'
SCALE: 1/4" = 1'-0"

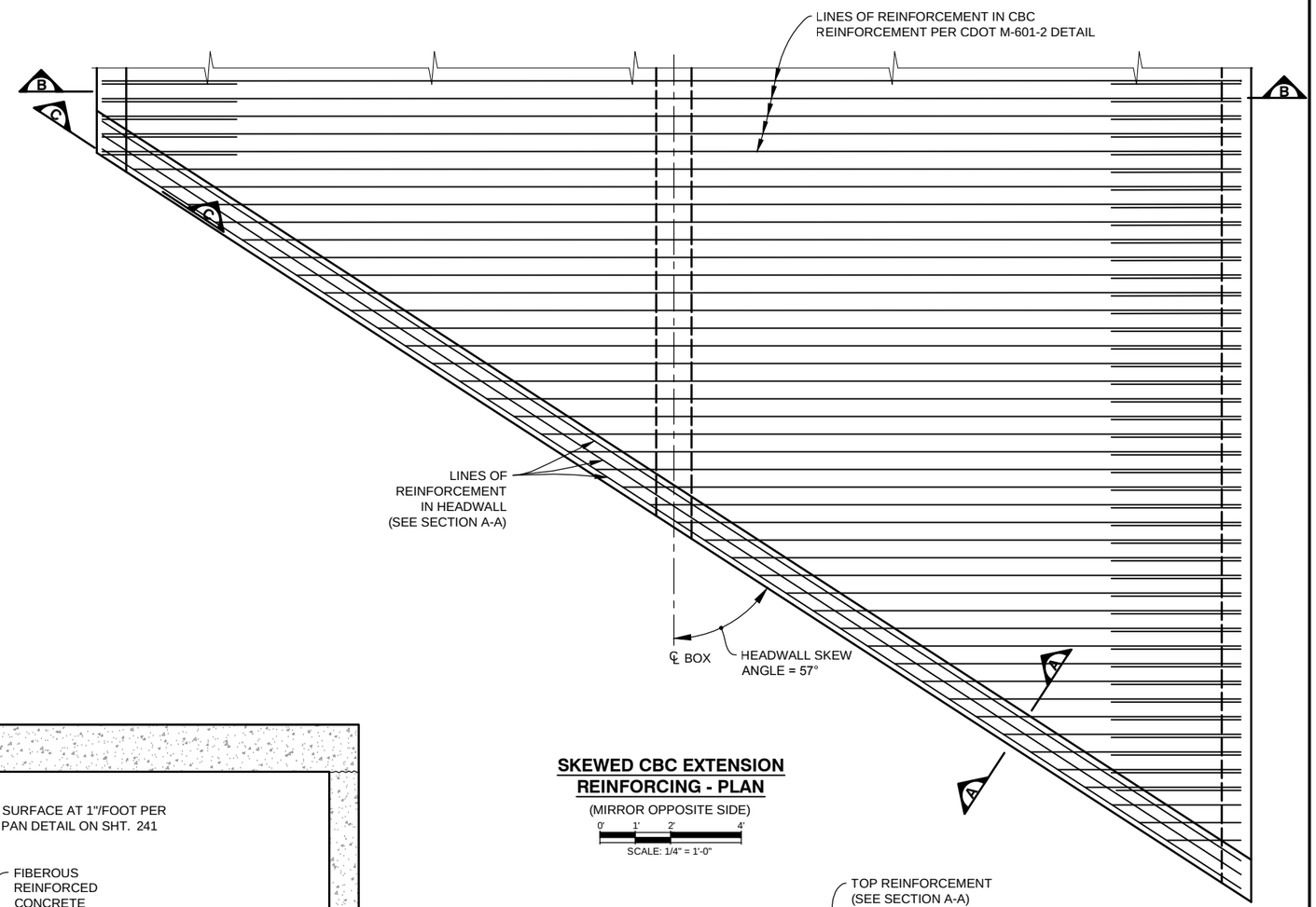

SKEWED CBC EXTENSION REINFORCING - PLAN

(MIRROR OPPOSITE SIDE)

0' 1' 2' 4'
SCALE: 1/4" = 1'-0"

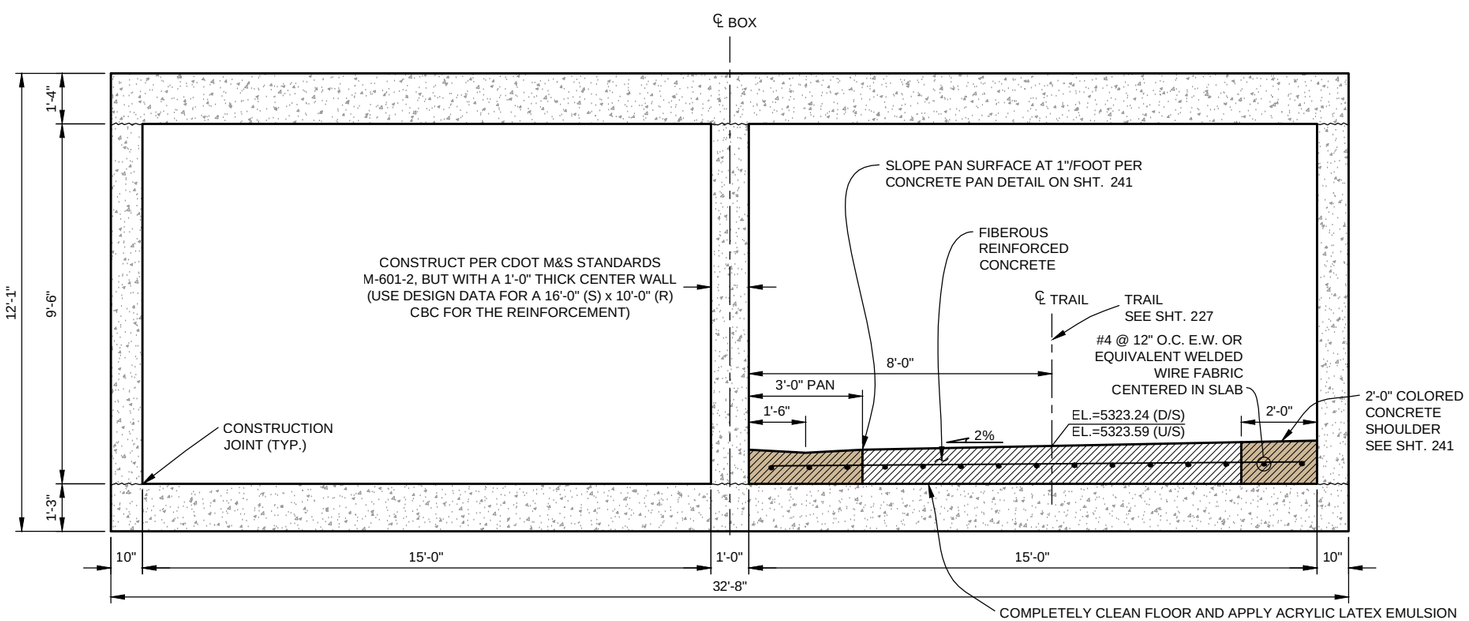

SECTION B

0' 1' 2' 4'
SCALE: 1/4" = 1'-0"

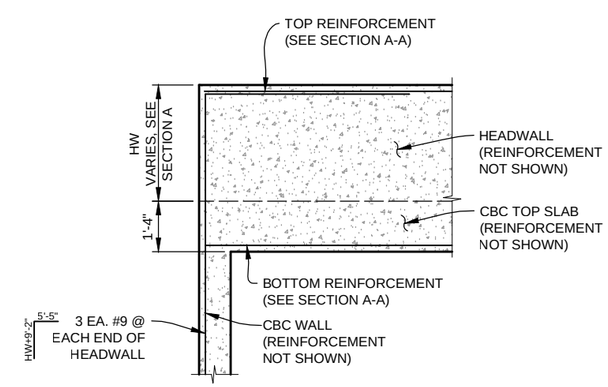

HEADWALL ADD'L REINFORCEMENT AT ENDS SECTION C

0' 1' 2' 4'
SCALE: 1/4" = 1'-0"

Computer File Information		
Creation Date: 11/14/14	Initials: JHK	
Last Modification Date: 06/18/15	Initials: JHK	
Full Path: P:\11-039.03\CAD		
Drawing File Name: 11-039.03_KAL UND DET.dwg		
AutoCAD 2014	Scale: AS SHOWN	

MULLER ENGINEERING CO., INC.
CONSULTING ENGINEERS
777 S. WADSWORTH BLVD. 4-100
LAKEWOOD, COLORADO 80226
(303) 988-4939
MULLER
MEC PROJECT NO. 11039.03

COLORADO REGISTERED PROFESSIONAL ENGINEER
JOSEPH A. HARRA
26719
6/18/15

Sheet Revisions		
Date:	Comments	Init.

As Constructed
No Revisions:
Revised:
Void:

Region 4 RDM

CITY OF BOULDER

WONDERLAND CREEK - GREENWAYS IMPROVEMENT PROJECT

KALMIA AVE. BOX CULVERT DETAILS

Designer:	KMA	Structure Numbers	
Detailer:	JHK		
Sheet Subset:	DRAINAGE	Subset Sheets:	KA-3

Project No./Code
STM 110-081
18405
Sheet Number: 161

PLOTTED: 6/19/2015 10:58:13 AM
NAME: P:\11-039.03 WONDERLAND CREEK LOWER REACH - FINAL DESIGN\CAD\11-039.03_KAL UND DET.DWG

STRUCTURE GENERAL NOTES

1. ALL WORK SHALL BE DONE IN ACCORDANCE WITH THE COLORADO DEPARTMENT OF TRANSPORTATION (CDOT) STANDARD SPECIFICATIONS FOR ROAD AND BRIDGE CONSTRUCTION, 2011 EDITION, AS APPLICABLE TO THE PROJECT.
2. STRUCTURE EXCAVATION AND BACKFILL SHALL BE IN ACCORDANCE WITH CDOT STANDARD PLANS, M&S STANDARDS M-206-1, UNLESS OTHERWISE NOTED ON PLANS.
3. STRUCTURE BACKFILL FOR THE BOX CULVERT AND WINGWALLS SHALL CONFORM TO STRUCTURE BACKFILL (CLASS 1) SPECIFICATIONS, AND SHALL BE PLACED IN ACCORDANCE WITH CDOT SPECIFICATIONS, SECTION 206.
4. THE SOILS AND FOUNDATION INVESTIGATION FOR THE CONCRETE BOX CULVERT AND WINGWALLS WAS PERFORMED BY CTL THOMPSON, INC. THE SUB SURFACE CONDITIONS AND RECOMMENDATIONS FOR THE STRUCTURE ARE CONTAINED IN A REPORT DATED JULY 3, 2013, PROJ NO. DN46,599-125. REFER TO THE PROJECT SPECIFICATIONS FOR COPIES OF THESE REPORTS.
5. THE BOTTOM SLAB OF THE BOX CULVERT, AND THE WINGWALL FOOTINGS SHALL NOT BE PLACED UNTIL SUBGRADE IS OBSERVED AND APPROVED IN WRITING BY THE ENGINEER.
6. EXPANSION JOINT MATERIAL SHALL MEET AASHTO SPECIFICATION M-213.
7. THE COST FOR EXPANSION JOINT MATERIAL SHALL NOT BE PAID FOR SEPARATELY BUT SHALL BE INCLUDED IN THE WORK.
8. WATER STOPS SHALL MEET THE REQUIREMENTS OF CDOT SPECIFICATIONS, SECTION 518.
9. STRUCTURAL CONCRETE EXPOSED TO SOIL SHALL CONFORM TO CEMENTITIOUS MATERIALS REQUIREMENTS CLASS 0 CORRESPONDING TO SULFATE EXPOSURE CLASS 0.
10. ALL CONCRETE SHALL BE CLASS D (BOX CULVERT)
11. ALL CONSTRUCTION JOINTS SHALL BE THOROUGHLY CLEANED AND ROUGHENED BEFORE FRESH CONCRETE IS PLACED.
12. ALL CONSTRUCTION JOINTS NOT SHOWN ON THE PLANS SHALL BE APPROVED BY THE ENGINEER.
13. WINGWALL FOOTINGS AND BOTTOM SLAB OF BOX CULVERT SHALL BE PLACED MONOLITHICALLY.
14. THE CONTRACTOR SHALL BE RESPONSIBLE FOR THE STABILITY OF THE STRUCTURE DURING CONSTRUCTION.
15. THE CONTRACTOR SHALL NOT BACKFILL STRUCTURES UNTIL TOP SLAB AND WALLS HAVE REACHED 80% OF DESIGN STRENGTH.
16. ALL EXPOSED CONCRETE CORNERS SHALL BE CHAMFERED 3/4", UNLESS SHOWN OR OTHERWISE NOTED.
17. GRADE 60 REINFORCING STEEL IS REQUIRED.
18. ALL REINFORCING STEEL SHALL BE BLACK REINFORCING BARS UNLESS OTHERWISE NOTED.
19. THE FOLLOWING TABLE GIVES THE MINIMUM CLASS B LAP SPLICE LENGTH FOR BLACK (NON-EPOXY COATED) REINFORCING BARS PLACED IN ACCORDANCE WITH SUBSECTION 602.06, THESE SPLICE LENGTH SHALL INCREASE BY 25% FOR BARS SPACED LESS THAN 6" ON CENTER.

BAR SIZE:	#4	#5	#6	#7	#8	#9	#10	#11
SPLICE LENGTH FOR CLASS D CONCRETE:	1'-0"	1'-4"	1'-7"	1'-11"	2'-6"	3'-1"	3'-11"	4'-10"

20. ALL REINFORCEMENT SHALL HAVE A CLEAR COVERAGE OF 2", EXCEPT AS SHOWN ON THE PLANS. CLEAR COVERAGE SHALL BE MEASURED FROM THE SURFACE OF THE CONCRETE TO THE OUTSIDE OF THE REINFORCEMENT.
21. THE STOCK LENGTH USED FOR ALL REINFORCING IS 60 FEET.
22. ALL TRANSVERSE REINFORCING SHAIL BE NORMAL TO THE CENTERLINE OF THE BOX.
23. FILTER MATERIAL AND CLOTH FOR WINGWALL DRAIN HOLES SHALL BE INCLUDED IN WORK.
24. THE CONTRACTOR SHALL BE RESPONSIBLE FOR THE STABILITY OF THE STRUCTURE DURING CONSTRUCTION.
25. ALL DIMENSIONS ARE PERPENDICULAR TO THE CENTERLINE OF THE BOX.
26. STATIONS, ELEVATIONS, AND DIMENSIONS CONTAINED IN THESE PLANS ARE CALCULATED FROM A RECENT FIELD SURVEY. THE CONTRACTOR SHALL VERIFY ALL DEPENDENT DIMENSIONS IN THE FIELD BEFORE ORDERING OR FABRICATING ANY MATERIAL
27. THE INFORMATION SHOWN ON THESE PLANS CONCERNING-THE TYPE AND LOCATION OF UNDERGROUND UTILITIES IS NOT GUARANTEED TO BE ACCURATE OR ALL INCLUSIVE. THE CONTRACTOR IS RESPONSIBLE FOR MAKING HIS OWN DETERMINATION AS TO THE TYPE AND LOCATION OF UNDERGROUND UTILITIES AS MAY BE NECESSARY TO AVOID DAMAGE THERETO. THE CONTRACTOR SHALL CONTACT THE UTILITY NOTIFICATION CENTER OF COLORADO AT 1-800-922-1987 AT LEAST 2 DAYS (NOT INCLUDING THE DAY OF NOTIFICATION) PRIOR TO ANY EXCAVATION OR OTHER EARTHWORK.
28. FOR STRUCTURE NUMBER INSTALLATION, SEE STANDARD S-614-12.
29. A STRUCTURAL CONCRETE COATING SHALL BE APPLIED TO ALL GRAY CONCRETE (NO INTEGRAL COLOR) EXPOSED SURFACES TO 1'-0" BELOW FINAL GRADE UNLESS OTHERWISE NOTED. THE COLOR SHALL BE EQUIVALENT TO FEDERAL STANDARD 595B, COLOR NO. 33522 (LIGHT TAN). TEST PANELS SHALL BE SUBMITTED IN ACCORDANCE WITH CDOT STANDARD SPECIFICATION 601.14(B) 4.

DESIGN DATA

AASHTO LRFD 6TH EDITION, 2012

DESIGN METHOD: LOAD AND RESISTANCE FACTOR DESIGN

LOADING DATA:

LIVE LOAD = AASHTO LRFD, HL-93 TRUCK, HL-93 TANDEM, AND COLORADO PERMIT TRUCK

DEAD LOAD CASE 1: VERTICAL EARTH LOAD = 135 PCF
HORIZONTAL EARTH LOAD = 30 PCF

DEAD LOAD CASE 2: VERTICAL EARTH LOAD = 135 PCF
HORIZONTAL EARTH LOAD = 60 PCF

LIVE LOAD SURCHARGE ON EXTERIOR WALLS = 2'-0" OF EARTH

DESIGN LOADING (WINGWALLS):

ALLOWABLE BEARING PRESSURE = 3000 psf
UNIT SOIL WEIGHT = 135 PCF
ACTIVE LATERAL EARTH PRESSURE = 35 (ACTIVE) pcf
COEFFICIENT OF SLIDING FRICTION = 0.50

DESIGN DATA (SOUNDWALL)

DESIGN METHOUD: LOAD AND RESISTANCE

LIVE LOAD: 2' SURCHARGE
WIND LOAD: 40 psf

UNIT WEIGHT OF SOIL = 135 pcf
EQUIVALENT FLUID PRESSURE = 35 pcf (ACTIVE)
COEFFICIENT OF SLIDING FRICTION = 0.50

REINFORCED CONCRETE:

CLASS D CONCRETE: f' c = 4,500 psi
REINFORCING STEEL: f y = 60,000 psi

Know what's **below**
Call before you dig.

PLOTTED: 6/19/2015 10:58:27 AM
NAME: P:\11-039.03 WONDERLAND CREEK LOWER REACH - FINAL DESIGN\CAD\11-039.03_STR CBC 28TH ST INFO.DWG

Computer File Information	
Creation Date: 05/30/15	Initials: JHK
Last Modification Date: 06/18/15	Initials: JHK
Full Path: P:\11-039.03\CAD	
Drawing File Name: 11-039.03_STR CBC 28TH St INFO.dwg	
AutoCAD 2014	Scale: AS SHOWN

MULLER ENGINEERING CO., INC.
CONSULTING ENGINEERS
777 S. WADSWORTH BLVD. 4-100
LAKEWOOD, COLORADO 80226
(303) 988-4939
MEC PROJECT NO. 11039.03

COLORADO REGISTERED PROFESSIONAL ENGINEER 32038 6-18-15

Sheet Revisions		
Date:	Comments	Init.

As Constructed
No Revisions:
Revised:
Void:

Region 4 RDM

CITY OF BOULDER

WONDERLAND CREEK - GREENWAYS IMPROVEMENT PROJECT
28TH STREET CULVERT
GENERAL INFORMATION

Designer:	KMA	Structure Numbers	D-15-BR
Detailer:	JHK		
Sheet Subset:	DRAINAGE	Subset Sheets:	28TH-1

Project No./Code
STM 110-081
18405
Sheet Number: 162

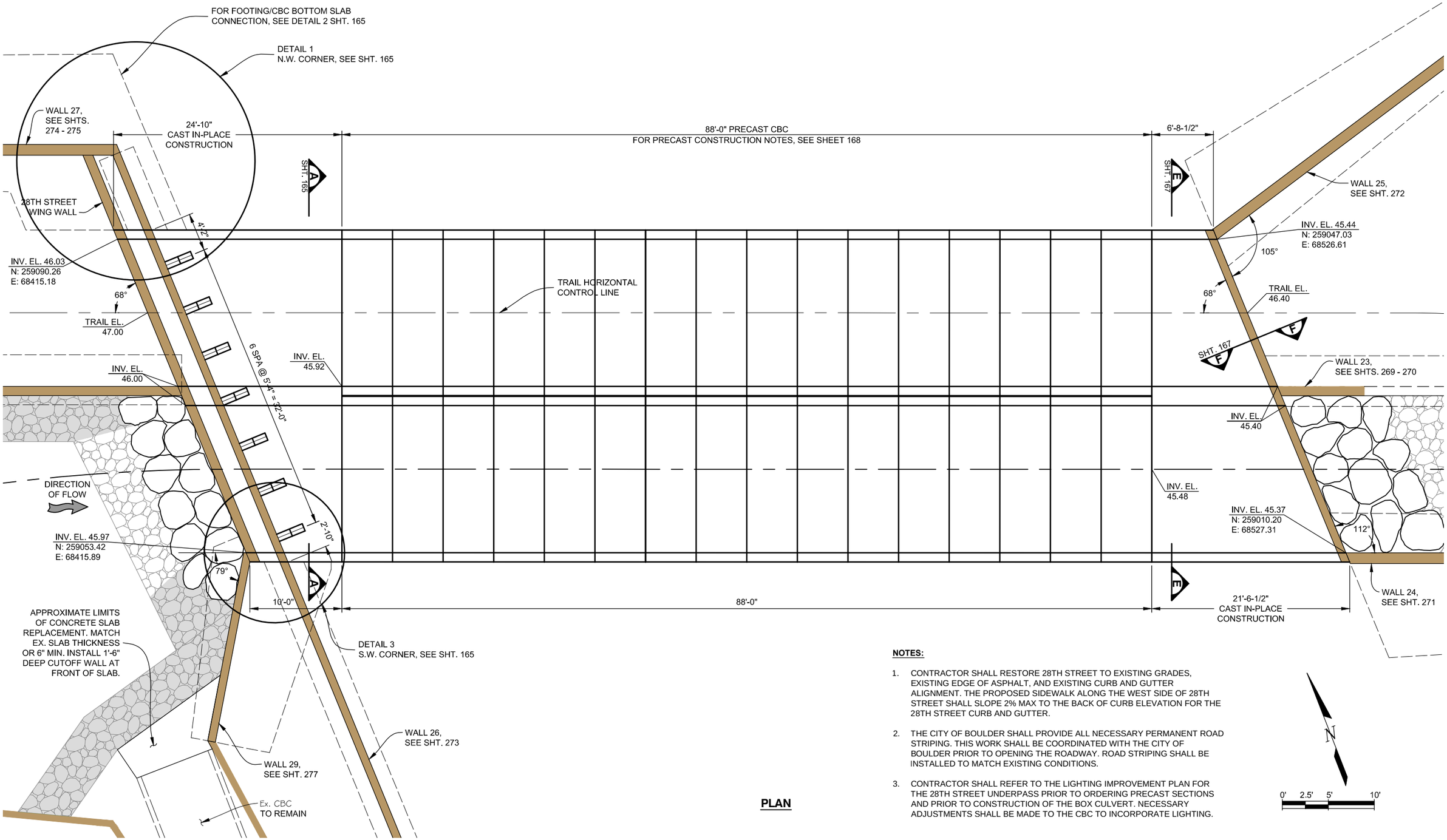

PLAN

NOTES:

1. CONTRACTOR SHALL RESTORE 28TH STREET TO EXISTING GRADES, EXISTING EDGE OF ASPHALT, AND EXISTING CURB AND GUTTER ALIGNMENT. THE PROPOSED SIDEWALK ALONG THE WEST SIDE OF 28TH STREET SHALL SLOPE 2% MAX TO THE BACK OF CURB ELEVATION FOR THE 28TH STREET CURB AND GUTTER.
2. THE CITY OF BOULDER SHALL PROVIDE ALL NECESSARY PERMANENT ROAD STRIPING. THIS WORK SHALL BE COORDINATED WITH THE CITY OF BOULDER PRIOR TO OPENING THE ROADWAY. ROAD STRIPING SHALL BE INSTALLED TO MATCH EXISTING CONDITIONS.
3. CONTRACTOR SHALL REFER TO THE LIGHTING IMPROVEMENT PLAN FOR THE 28TH STREET UNDERPASS PRIOR TO ORDERING PRECAST SECTIONS AND PRIOR TO CONSTRUCTION OF THE BOX CULVERT. NECESSARY ADJUSTMENTS SHALL BE MADE TO THE CBC TO INCORPORATE LIGHTING.

Computer File Information		
Creation Date: 04/08/15	Initials: JHK	
Last Modification Date: 06/18/15	Initials: JHK	
Full Path: P:\11-039.03\WONDERLAND\CAD		
Drawing File Name: 11-039.03_STR CBC 28TH St PLAN.dwg		
AutoCAD 2014	Scale: AS SHOWN	

MULLER ENGINEERING CO., INC.
CONSULTING ENGINEERS
777 S. WADSWORTH BLVD. 4-100
LAKEWOOD, COLORADO 80226
(303) 988-4939
MULLER
MEC PROJECT NO. 11039.03

REGISTERED PROFESSIONAL ENGINEER 32038 6-18-15

Sheet Revisions		
Date:	Comments	Init.

As Constructed
No Revisions:
Revised:
Void:

Region 4 RDM
CITY OF BOULDER

WONDERLAND CREEK - GREENWAYS IMPROVEMENT PROJECT
28TH STREET CULVERT PLAN

Designer:	KMA	Structure Numbers	D-15-BR
Detailer:	JHK		
Sheet Subset:	DRAINAGE	Subset Sheets:	28TH-2

Project No./Code
STM 110-081
18405
Sheet Number: 163

PLOTTED: 4/8/2015 1:55:11 PM
NAME: P:\11-039.03 WONDERLAND CREEK LOWER REACH -FINAL DESIGN\CAD\11-039.03_STR CBC 28TH ST PLAN.DWG

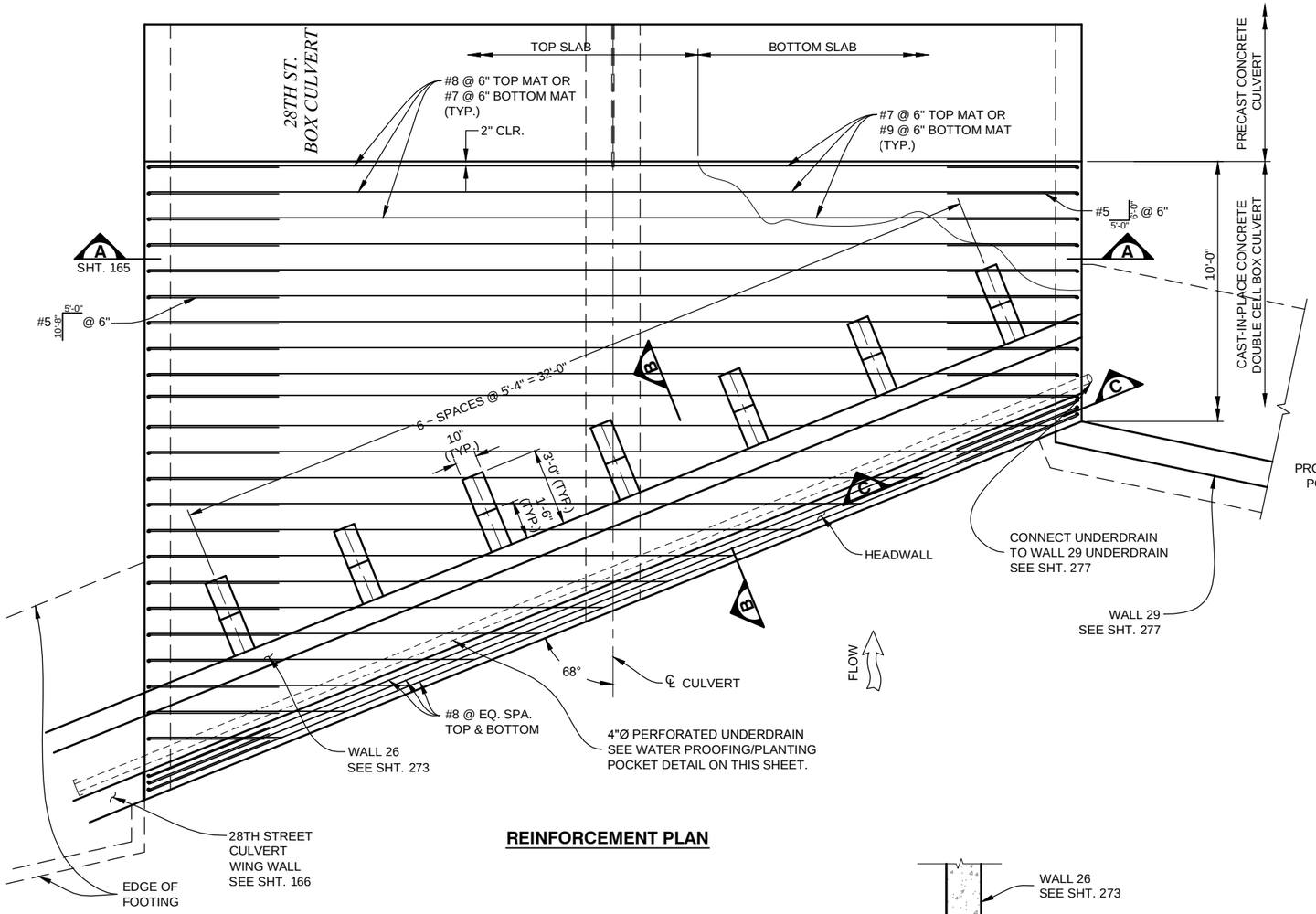

REINFORCEMENT PLAN

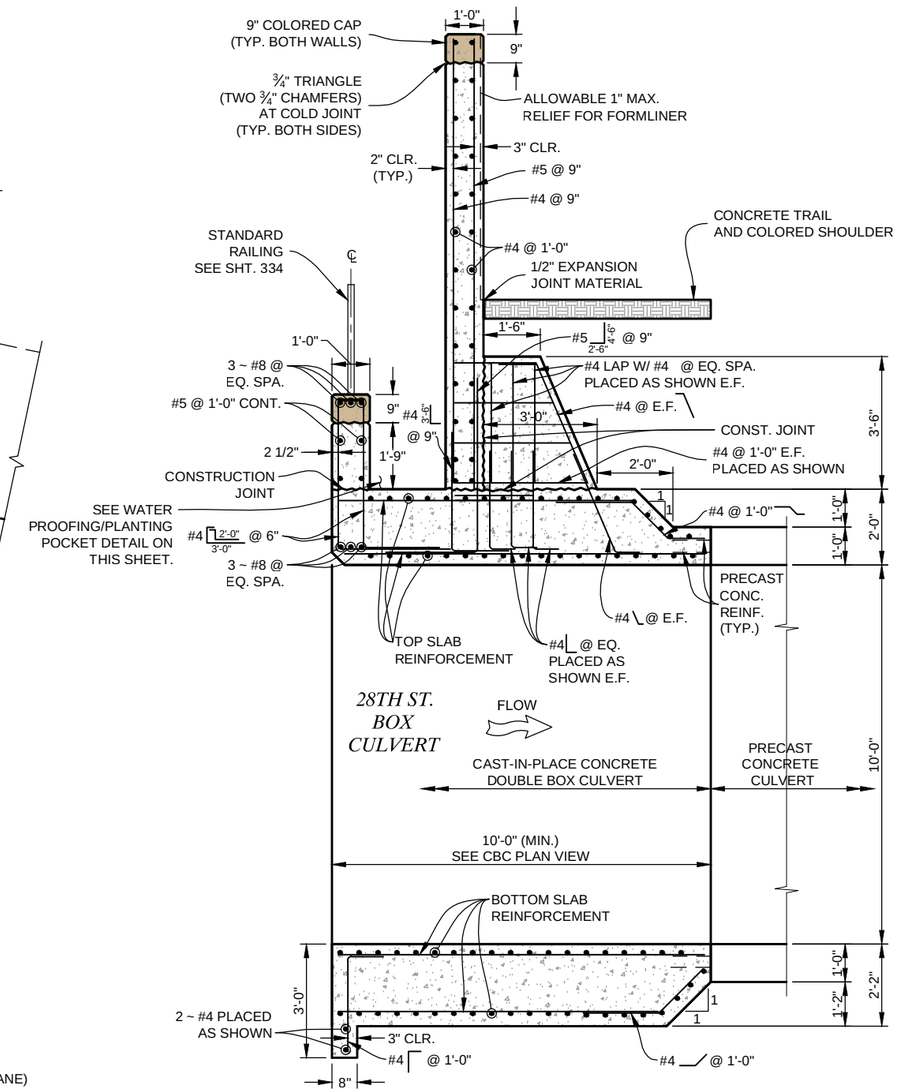

SECTION B

0' 1' 2' 4'

SCALE: 1/4" = 1'-0"

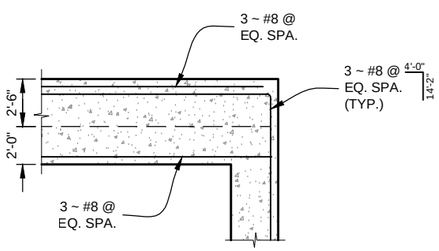

SECTION C

0' 2' 4' 8'

SCALE: 1/8" = 1'-0"

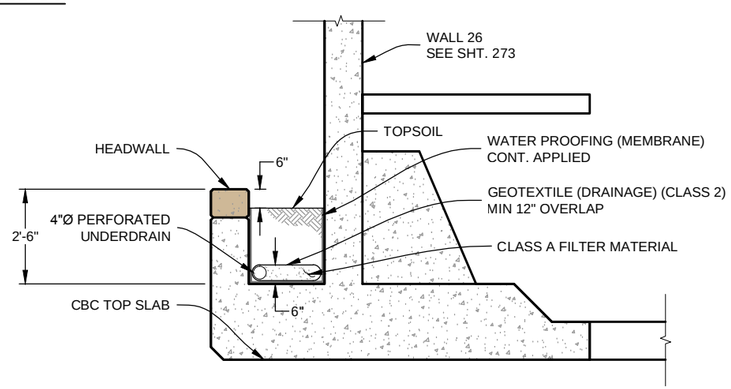

WATER PROOFING/PLANTING POCKET DETAIL

0' 1' 2' 4'

SCALE: 1/4" = 1'-0"

Computer File Information			
Creation Date: 03/03/15		Initials: JHK	
Last Modification Date: 06/18/15		Initials: JHK	
Full Path: P:\11-039.03\CAD			
Drawing File Name: 11-039.03_STR CBC 28TH St.dwg			
AutoCAD 2014	Scale: AS SHOWN		

MULLER ENGINEERING CO., INC.
CONSULTING ENGINEERS
777 S. WADSWORTH BLVD. 4-100
LAKEWOOD, COLORADO 80226
(303) 988-4939
MULLER
MEC PROJECT NO. 11039.03

REGISTERED PROFESSIONAL ENGINEER 32038 6-18-15

Sheet Revisions		
Date:	Comments	Init.

As Constructed
No Revisions:
Revised:
Void:

Region 4 RDM

CITY OF BOULDER

WONDERLAND CREEK - GREENWAYS IMPROVEMENT PROJECT

28TH STREET CULVERT DETAILS

Designer:	KMA	Structure Numbers	D-15-BR
Detailer:	JHK		
Sheet Subset:	DRAINAGE	Subset Sheets:	28TH-3

Project No./Code
STM 110-081
18405
Sheet Number: 164

PLOTTED: 6/19/2015 10:59:08 AM
NAME: P:\11-039.03 WONDERLAND CREEK LOWER REACH - FINAL DESIGN\CAD\11-039.03_STR CBC 28TH ST.DWG

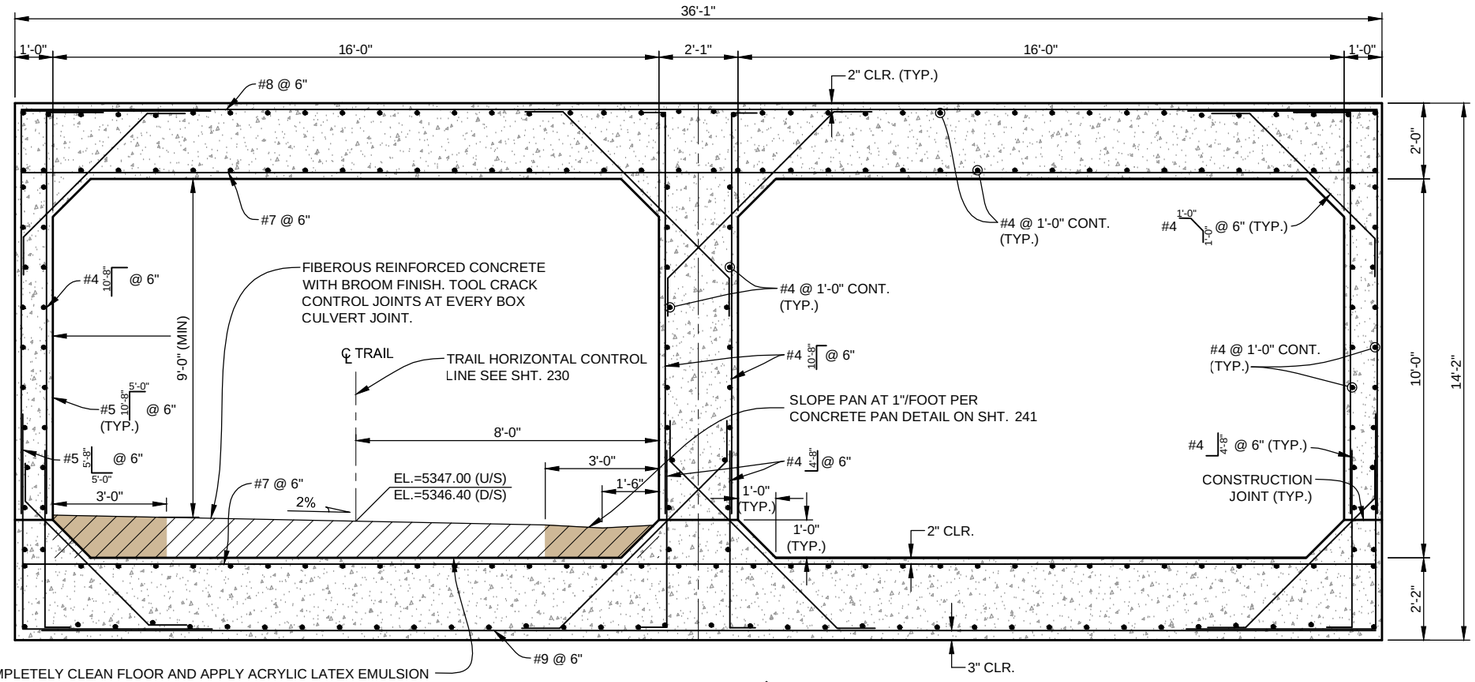

COMPLETELY CLEAN FLOOR AND APPLY ACRYLIC LATEX EMULSION CONCRETE BONDING AGENT PER MANUFACTURER'S INSTRUCTIONS PRIOR TO INSTALLING CONCRETE OVERLAY. BONDING AGENT MATERIAL SHALL BE APPROVED BY THE ENGINEER PRIOR TO USE. BONDING AGENT COST TO BE INCLUDED IN THE COST OF THE WORK.

SECTION A
SHT. 163, 164
0' 1' 2' 4'
SCALE: 1/4" = 1'-0"

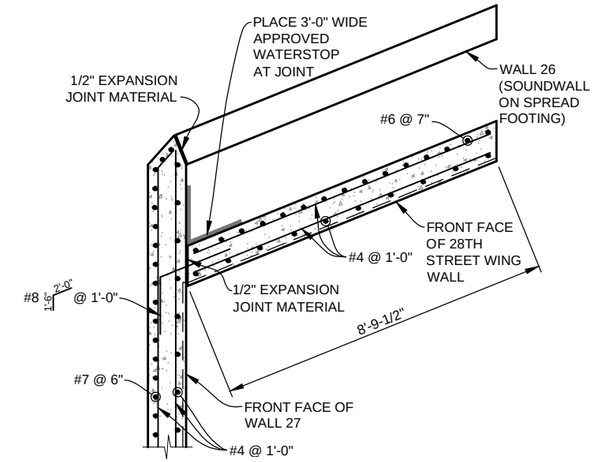

DETAIL 1, SHT. 163
0' 1' 2' 4'
SCALE: 1/4" = 1'-0"

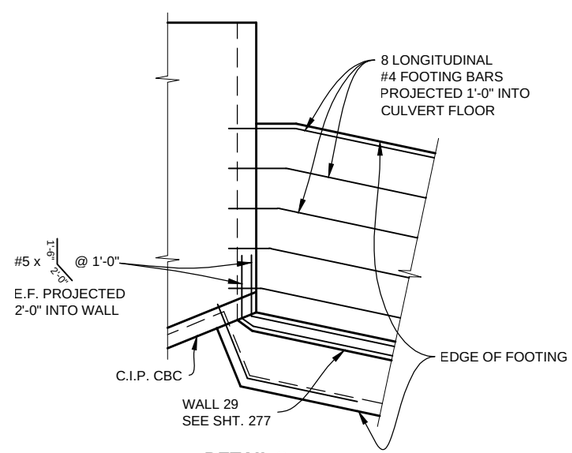

DETAIL 3
SW CORNER DETAIL, SHT. 163
0' 2' 4' 8'
SCALE: 1/8" = 1'-0"

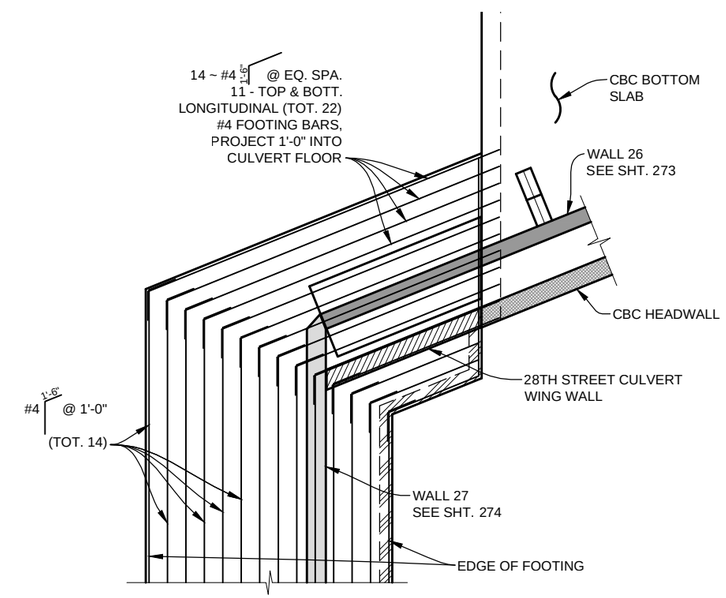

DETAIL 2
FOOTING/CBC BOTTOM SLAB CONNECTION DETAIL, SHT. 163
0' 2' 4' 8'
SCALE: 1/8" = 1'-0"

Computer File Information		
Creation Date: 03/03/15	Initials: JHK	
Last Modification Date: 06/18/15	Initials: JHK	
Full Path: P:\11-039.03\CAD		
Drawing File Name: 11-039.03_STR CBC 28TH St.dwg		
AutoCAD 2014	Scale: AS SHOWN	

MULLER ENGINEERING CO., INC.
CONSULTING ENGINEERS
777 S. WADSWORTH BLVD. 4-100
LAKEWOOD, COLORADO 80226
(303) 988-4939
MULLER
MEC PROJECT NO. 11039.03

COLORADO REGISTERED PROFESSIONAL ENGINEER 32038 6-18-15

Sheet Revisions		
Date:	Comments	Init.

As Constructed
No Revisions:
Revised:
Void:

Region 4 RDM
CITY OF BOULDER

WONDERLAND CREEK - GREENWAYS IMPROVEMENT PROJECT
28TH STREET CULVERT DETAILS

Designer:	KMA	Structure Numbers	D-15-BR
Detailer:	JHK		
Sheet Subset:	DRAINAGE	Subset Sheets:	28TH-4

Project No./Code
STM 110-081
18405
Sheet Number: 165

PLOTTED: 6/19/2015 10:59:16 AM
NAME: P:\11-039.03 WONDERLAND CREEK LOWER REACH -FINAL DESIGN\CAD\11-039.03_STR CBC 28TH ST.DWG

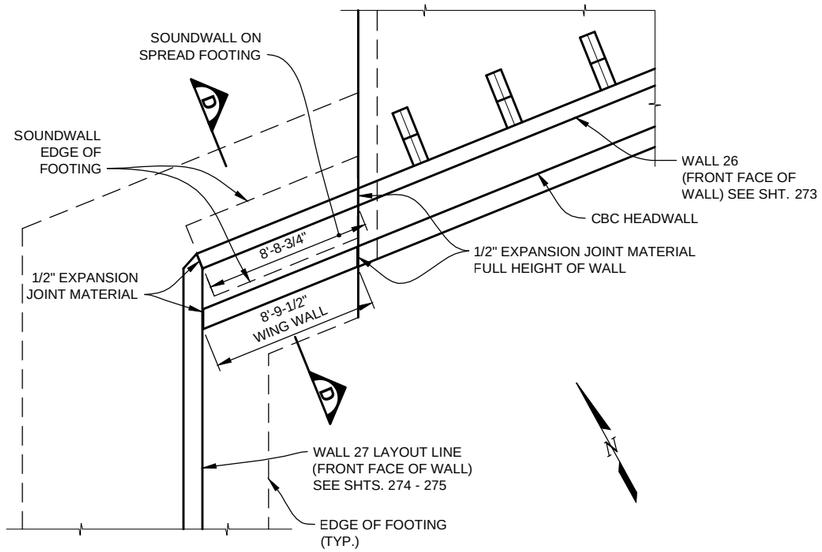

ENLARGED PLAN DETAIL (NW CORNER)

0' 2' 4' 8'
SCALE: 1/8" = 1'-0"

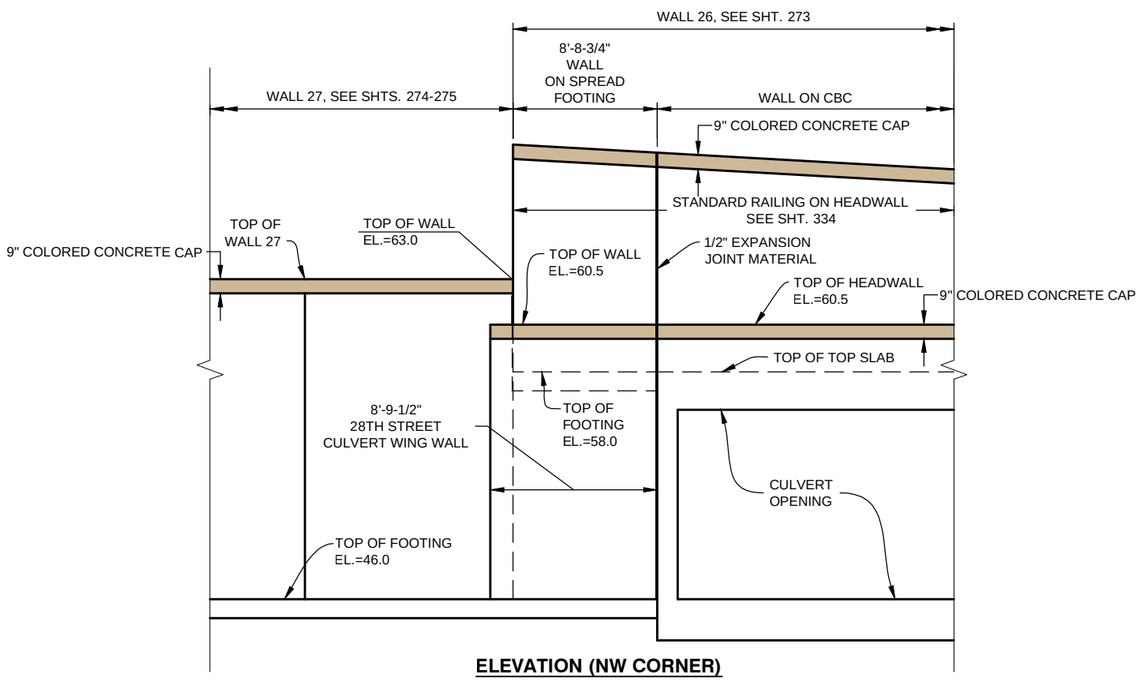

ELEVATION (NW CORNER)

0' 2' 4' 8'
SCALE: 1/8" = 1'-0"

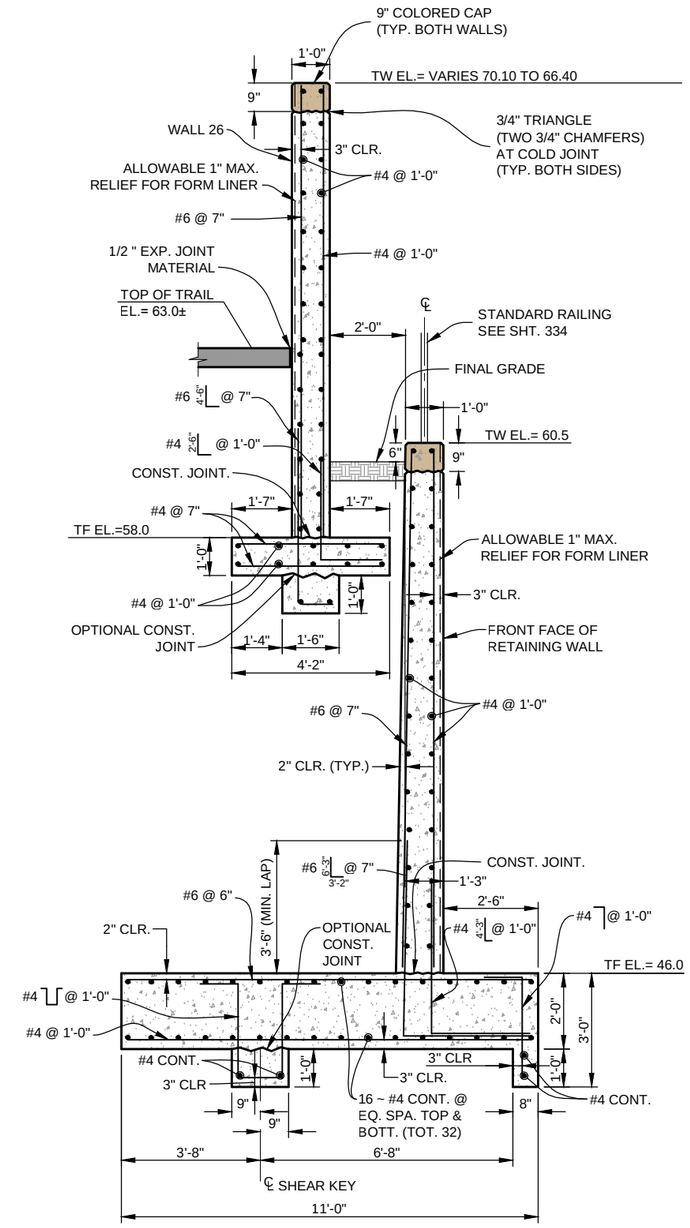

SECTION D

0' 1' 2' 4'
SCALE: 1/4" = 1'-0"

Computer File Information		
Creation Date: 03/03/15	Initials: JHK	
Last Modification Date: 06/18/15	Initials: JHK	
Full Path: P:\11-039.03\CAD		
Drawing File Name: 11-039.03_STR CBC 28TH St.dwg		
AutoCAD 2014	Scale: AS SHOWN	

MULLER ENGINEERING CO., INC.
CONSULTING ENGINEERS
777 S. WADSWORTH BLVD. 4-100
LAKEWOOD, COLORADO 80226
(303) 988-4939
MULLER
MEC PROJECT NO. 11039.03

Registered Professional Engineer 32038 6-18-15

Sheet Revisions		
Date:	Comments	Init.

As Constructed
No Revisions:
Revised:
Void:

Region 4 RDM
CITY OF BOULDER

WONDERLAND CREEK - GREENWAYS IMPROVEMENT PROJECT
28TH STREET CULVERT DETAILS

Designer:	KMA	Structure Numbers	D-15-BR
Detailer:	JHK		
Sheet Subset:	DRAINAGE	Subset Sheets:	28TH-5

Project No./Code
STM 110-081
18405
Sheet Number: 166

PLOTTED: 6/19/2015 10:59:22 AM
NAME: P:\11-039.03 WONDERLAND CREEK LOWER REACH -FINAL DESIGN\CAD\11-039.03_STR CBC 28TH ST.DWG

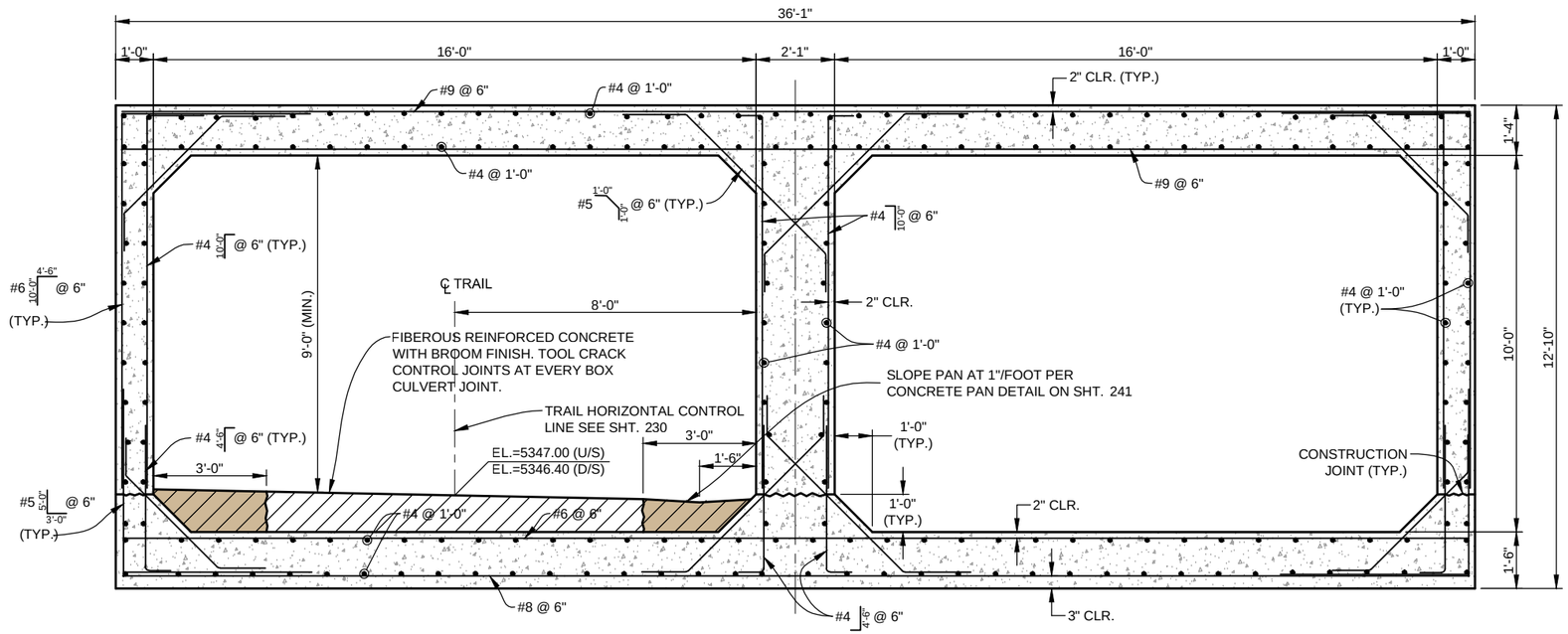

SECTION E SHT. 163

0' 1' 2' 4'

SCALE: 1/4" = 1'-0"

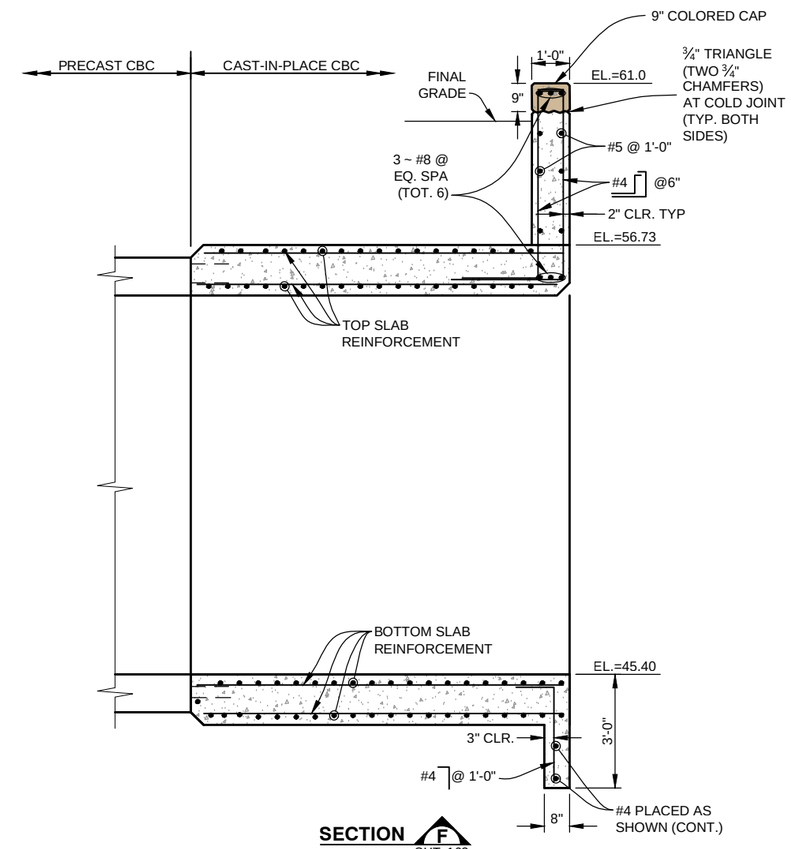

SECTION F SHT. 163

0' 1' 2' 4'

SCALE: 1/4" = 1'-0"

PLOTTED: 6/19/2015 10:59:28 AM
NAME: P:\11-039.03 WONDERLAND CREEK LOWER REACH -FINAL DESIGN\CAD\11-039.03_STR CBC 28TH ST.DWG

Computer File Information		
Creation Date: 03/03/15	Initials: JHK	
Last Modification Date: 06/18/15	Initials: JHK	
Full Path: P:\11-039.03\CAD		
Drawing File Name: 11-039.03_STR CBC 28TH St.dwg		
AutoCAD 2014	Scale: AS SHOWN	

MULLER ENGINEERING CO., INC.
MULLER
CONSULTING ENGINEERS
777 S. WADSWORTH BLVD. 4-100
LAKEWOOD, COLORADO 80226
(303) 988-4939

MEC PROJECT NO. 11039.03

COLORADO REGISTERED PROFESSIONAL ENGINEER 32038 6-18-15

Sheet Revisions		
Date:	Comments	Init.

As Constructed
No Revisions:
Revised:
Void:

Region 4 RDM

CITY OF BOULDER

WONDERLAND CREEK - GREENWAYS IMPROVEMENT PROJECT

28TH STREET CULVERT DETAILS

Designer:	KMA	Structure Numbers	D-15-BR
Detailer:	JHK		
Sheet Subset:	DRAINAGE	Subset Sheets:	28TH-6

Project No./Code
STM 110-081
18405
Sheet Number: 167

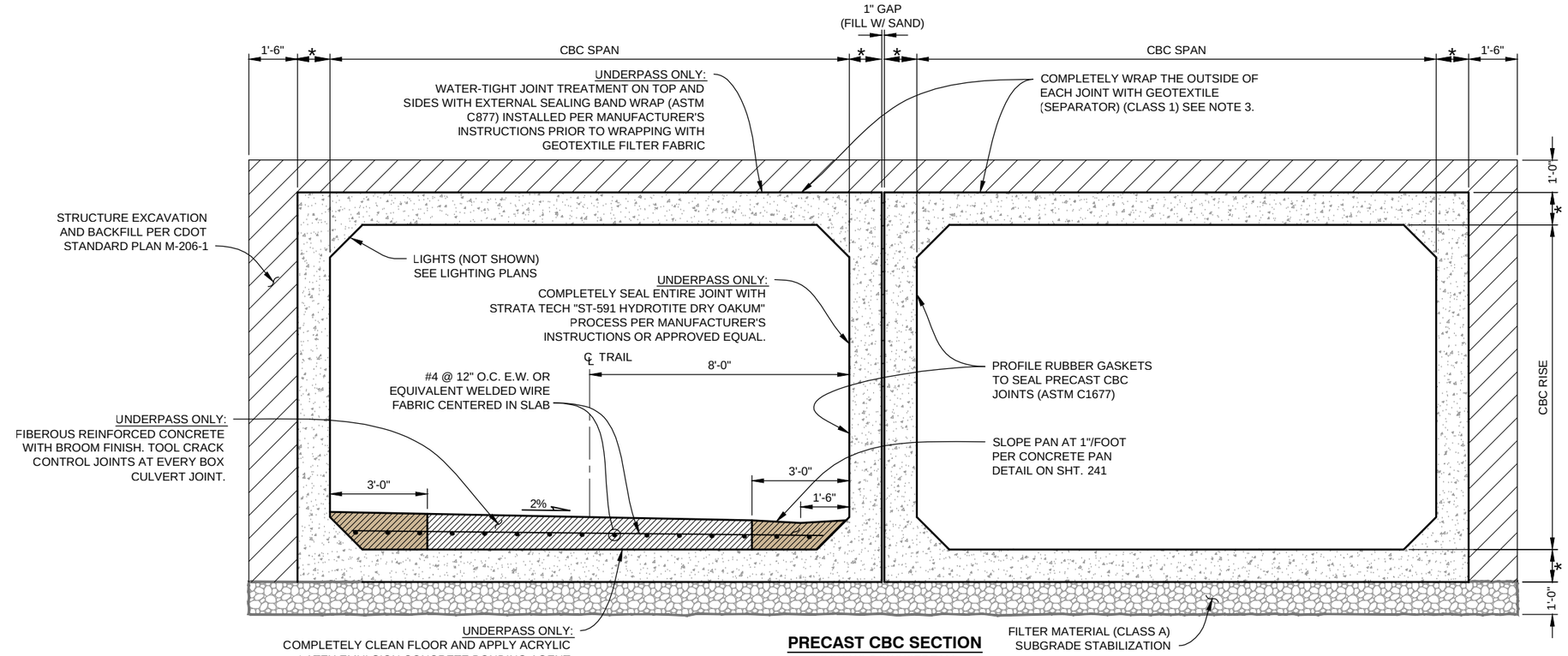

PRECAST CBC SECTION

(LOOKING DOWNSTREAM)

0' 1' 2' 4'

SCALE: 1/4" = 1'-0"

INSTALLATION NOTES:

1. USE MECHANICAL PULLER TO MAKE THE JOINT TIGHTER AND UNIFORM.
2. JOINT OPENINGS AT THE OUTSIDE FACE SHALL NOT EXCEED 1-1/2 INCHES AT ANY LOCATION ALONG THE JOINT PERIMETER.
3. PROVIDE FABRIC WITH A MINIMUM WIDTH OF 2 FEET AND A LENGTH SUFFICIENT THE ENSURE A MINIMUM OVERLAP OF 24 INCHES. THE GEOTEXTILE MUST EXTEND A MINIMUM OF 12 INCHES BEYOND EACH SIDE OF THE JOINT. SECURE THE FABRIC TIGHTLY AGAINST THE BOX SECTIONS WITH METAL OR PLASTIC STRAPPING. OTHER METHODS WHICH WILL HOLD THE GEOTEXTILE SECURELY AGAINST THE WALL OF THE CULVERT UNTIL THE BACKFILL IS PLACED AND COMPACTED MAY BE USED WHEN APPROVED BY THE ENGINEER.

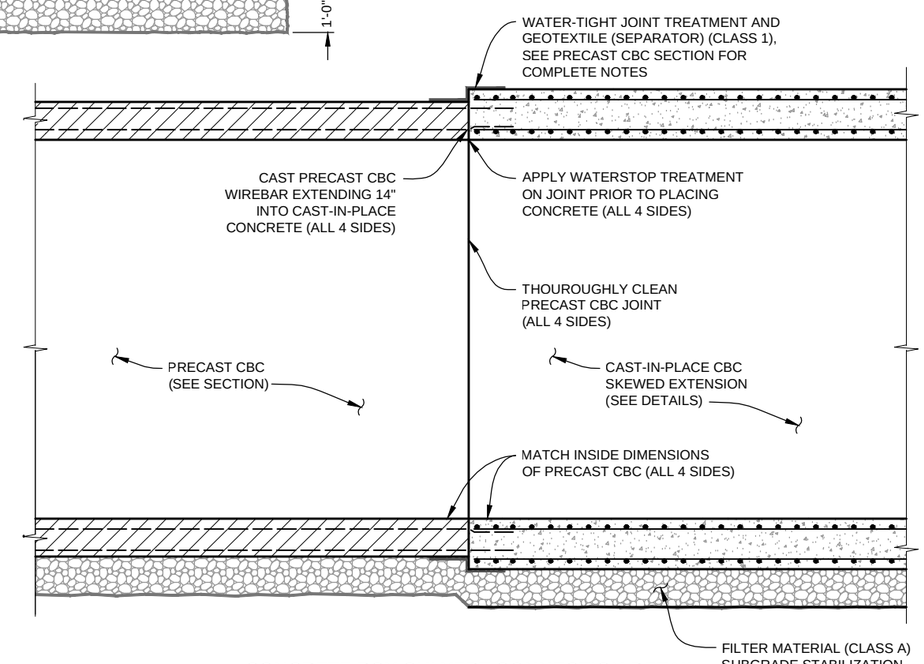

CONCRETE BOX CULVERT CONNECTION DETAIL

0' 1' 2' 4'

SCALE: 1/4" = 1'-0"

Computer File Information		
Creation Date: 06/02/15	Initials: JHK	
Last Modification Date: 06/18/15	Initials: JHK	
Full Path: P:\11-039.03\CAD		
Drawing File Name: 11-039.03_STR CBC 28TH St DET.dwg		
AutoCAD 2014	Scale: AS SHOWN	

MULLER ENGINEERING CO., INC.
CONSULTING ENGINEERS
777 S. WADSWORTH BLVD. 4-100
LAKEWOOD, COLORADO 80226
(303) 988-4939

MEC PROJECT NO. 11039.03

COLORADO REGISTERED PROFESSIONAL ENGINEER 32038 6-18-15

Sheet Revisions		
Date:	Comments	Init.

As Constructed

No Revisions:

Revised:

Void:

Region 4 RDM

CITY OF BOULDER

WONDERLAND CREEK - GREENWAYS IMPROVEMENT PROJECT

28TH STREET CULVERT DETAILS

Designer:	KMA	Structure Numbers	D-15-BR
Detailer:	JHK		
Sheet Subset:	DRAINAGE	Subset Sheets:	28TH-7

Project No./Code

STM 110-081

18405

Sheet Number: 168

PLOTTED: 6/19/2015 10:59:41 AM
NAME: P:\11-039.03 WONDERLAND CREEK LOWER REACH -FINAL DESIGN\CAD\11-039.03_STR CBC 28TH ST DET.DWG

STRUCTURE GENERAL NOTES

1. ALL WORK SHALL BE DONE IN ACCORDANCE WITH THE COLORADO DEPARTMENT OF TRANSPORTATION (CDOT) STANDARD SPECIFICATIONS FOR ROAD AND BRIDGE CONSTRUCTION, 2011 EDITION, AS APPLICABLE TO THE PROJECT.
2. STRUCTURE EXCAVATION AND BACKFILL SHALL BE IN ACCORDANCE WITH CDOT STANDARD PLANS, M&S STANDARDS M-206-1, UNLESS OTHERWISE NOTED ON PLANS.
3. STRUCTURE BACKFILL FOR THE BOX CULVERT AND WINGWALLS SHALL CONFORM TO STRUCTURE BACKFILL (CLASS 1) SPECIFICATIONS, AND SHALL BE PLACED IN ACCORDANCE WITH CDOT SPECIFICATIONS, SECTION 206.
4. THE SOILS AND FOUNDATION INVESTIGATION FOR THE CONCRETE BOX CULVERT AND WINGWALLS WAS PERFORMED BY CTL THOMPSON, INC. THE SUB SURFACE CONDITIONS AND RECOMMENDATIONS FOR THE STRUCTURE ARE CONTAINED IN A REPORT DATED JULY 3, 2013, PROJ NO. DN46,599-125. REFER TO THE PROJECT SPECIFICATIONS FOR COPIES OF THESE REPORTS.
5. THE BOTTOM SLAB OF THE BOX CULVERT, AND THE WINGWALL FOOTINGS SHALL NOT BE PLACED UNTIL SUBGRADE IS OBSERVED AND APPROVED IN WRITING BY THE ENGINEER.
6. EXPANSION JOINT MATERIAL SHALL MEET AASHTO SPECIFICATION M-213.
7. THE COST FOR EXPANSION JOINT MATERIAL SHALL NOT BE PAID FOR SEPARATELY BUT SHALL BE INCLUDED IN THE WORK.
8. WATER STOPS SHALL MEET THE REQUIREMENTS OF CDOT SPECIFICATIONS, SECTION 518.
9. STRUCTURAL CONCRETE EXPOSED TO SOIL SHALL CONFORM TO CEMENTITIOUS MATERIALS REQUIREMENTS CLASS 0 CORRESPONDING TO SULFATE EXPOSURE CLASS 0.
10. ALL CONCRETE SHALL BE CLASS D (BOX CULVERT)
11. ALL CONSTRUCTION JOINTS SHALL BE THOROUGHLY CLEANED AND ROUGHENED BEFORE FRESH CONCRETE IS PLACED.
12. ALL CONSTRUCTION JOINTS NOT SHOWN ON THE PLANS SHALL BE APPROVED BY THE ENGINEER.
13. WINGWALL FOOTINGS AND BOTTOM SLAB OF BOX CULVERT SHALL BE PLACED MONOLITHICALLY.
14. THE CONTRACTOR SHALL BE RESPONSIBLE FOR THE STABILITY OF THE STRUCTURE DURING CONSTRUCTION.
15. THE CONTRACTOR SHALL NOT BACKFILL STRUCTURES UNTIL TOP SLAB AND WALLS HAVE REACHED 80% OF DESIGN STRENGTH.
16. ALL EXPOSED CONCRETE CORNERS SHALL BE CHAMFERED 3/4", UNLESS SHOWN OR OTHERWISE NOTED.
17. GRADE 60 REINFORCING STEEL IS REQUIRED.
18. ALL REINFORCING STEEL SHALL BE BLACK REINFORCING BARS UNLESS OTHERWISE NOTED.
19. THE FOLLOWING TABLE GIVES THE MINIMUM CLASS B LAP SPLICE LENGTH FOR BLACK (NON-EPOXY COATED) REINFORCING BARS PLACED IN ACCORDANCE WITH SUBSECTION 602.06, THESE SPLICE LENGTH SHALL INCREASE BY 25% FOR BARS SPACED LESS THAN 6" ON CENTER.

BAR SIZE:	#4	#5	#6	#7	#8	#9	#10	#11
SPLICE LENGTH FOR CLASS D CONCRETE:	1'-0"	1'-4"	1'-7"	1'-11"	2'-6"	3'-1"	3'-11"	4'-10"

20. ALL REINFORCEMENT SHALL HAVE A CLEAR COVERAGE OF 2", EXCEPT AS SHOWN ON THE PLANS. CLEAR COVERAGE SHALL BE MEASURED FROM THE SURFACE OF THE CONCRETE TO THE OUTSIDE OF THE REINFORCEMENT.
21. THE STOCK LENGTH USED FOR ALL REINFORCING IS 60 FEET.
22. ALL TRANSVERSE REINFORCING SHAIL BE NORMAL TO THE CENTERLINE OF THE BOX.
23. FILTER MATERIAL AND CLOTH FOR WINGWALL DRAIN HOLES SHALL BE INCLUDED IN WORK.
24. THE CONTRACTOR SHALL BE RESPONSIBLE FOR THE STABILITY OF THE STRUCTURE DURING CONSTRUCTION.
25. ALL DIMENSIONS ARE PERPENDICULAR TO THE CENTERLINE OF THE BOX.
26. STATIONS, ELEVATIONS, AND DIMENSIONS CONTAINED IN THESE PLANS ARE CALCULATED FROM A RECENT FIELD SURVEY. THE CONTRACTOR SHALL VERIFY ALL DEPENDENT DIMENSIONS IN THE FIELD BEFORE ORDERING OR FABRICATING ANY MATERIAL
27. THE INFORMATION SHOWN ON THESE PLANS CONCERNING-THE TYPE AND LOCATION OF UNDERGROUND UTILITIES IS NOT GUARANTEED TO BE ACCURATE OR ALL INCLUSIVE. THE CONTRACTOR IS RESPONSIBLE FOR MAKING HIS OWN DETERMINATION AS TO THE TYPE AND LOCATION OF UNDERGROUND UTILITIES AS MAY BE NECESSARY TO AVOID DAMAGE THERETO. THE CONTRACTOR SHALL CONTACT THE UTILITY NOTIFICATION CENTER OF COLORADO AT 1-800-922-1987 AT LEAST 2 DAYS (NOT INCLUDING THE DAY OF NOTIFICATION) PRIOR TO ANY EXCAVATION OR OTHER EARTHWORK.
28. A STRUCTURAL CONCRETE COATING SHALL BE APPLIED TO ALL GRAY CONCRETE (NO INTEGRAL COLOR) EXPOSED SURFACES TO 1'-0" BELOW FINAL GRADE UNLESS OTHERWISE NOTED. THE COLOR SHALL BE EQUIVALENT TO FEDERAL STANDARD 595B, COLOR NO. 33522 (LIGHT TAN). TEST PANELS SHALL BE SUBMITTED IN ACCORDANCE WITH CDOT STANDARD SPECIFICATION 601.14(B) 4.

DESIGN DATA

AASHTO LRFD 6TH EDITION, 2012

DESIGN METHOD: LOAD AND RESISTANCE FACTOR DESIGN

LOADING DATA:

LIVE LOAD = AASHTO, H10 TRUCK

DEAD LOAD CASE 1: VERTICAL EARTH LOAD = 135 PCF
HORIZONTAL EARTH LOAD = 30 PCF

DEAD LOAD CASE 2: VERTICAL EARTH LOAD = 135 PCF
HORIZONTAL EARTH LOAD = 60 PCF

LIVE LOAD SURCHARGE ON EXTERIOR WALLS = 2'-0" OF EARTH

DESIGN LOADING (WINGWALLS):

ALLOWABLE BEARING PRESSURE = 2000 psf

UNIT SOIL WEIGHT = 135 PCF

ACTIVE LATERAL EARTH PRESSURE = 35 pcf

COEFFICIENT OF SLIDING FRICTION = 0.50

REINFORCED CONCRETE:

CLASS D CONCRETE: f' c = 4,500 psi

REINFORCING STEEL: f y = 60,000 psi

Know what's **below**
Call before you dig.

PLOTTED: 6/19/2015 10:59:53 AM
NAME: P:\11-039.03 WONDERLAND CREEK LOWER REACH - FINAL DESIGN\CAD\11-039.03_WINDING PED INFO.DWG

Computer File Information	
Creation Date: 05/30/15	Initials: JHK
Last Modification Date: 06/18/15	Initials: JHK
Full Path: P:\11-039.03\CAD	
Drawing File Name: 11-039.03_WINDING PED INFO.dwg	
AutoCAD 2014	Scale: AS SHOWN

MULLER ENGINEERING CO., INC.
CONSULTING ENGINEERS
777 S. WADSWORTH BLVD. 4-100
LAKEWOOD, COLORADO 80226
(303) 988-4939
MULLER
MEC PROJECT NO. 11039.03

REGISTERED PROFESSIONAL ENGINEER 32038 6-18-15

Sheet Revisions		
Date:	Comments	Init.

As Constructed
No Revisions:
Revised:
Void:

Region 4 RDM

CITY OF BOULDER

WONDERLAND CREEK - GREENWAYS IMPROVEMENT PROJECT
WINDING TRAIL PEDESTRIAN CROSSING GENERAL INFORMATION

Designer:	KMA	Structure Numbers	
Detailer:	JHK		
Sheet Subset:	DRAINAGE	Subset Sheets:	WT-1

Project No./Code
STM 110-081
18405
Sheet Number: 169

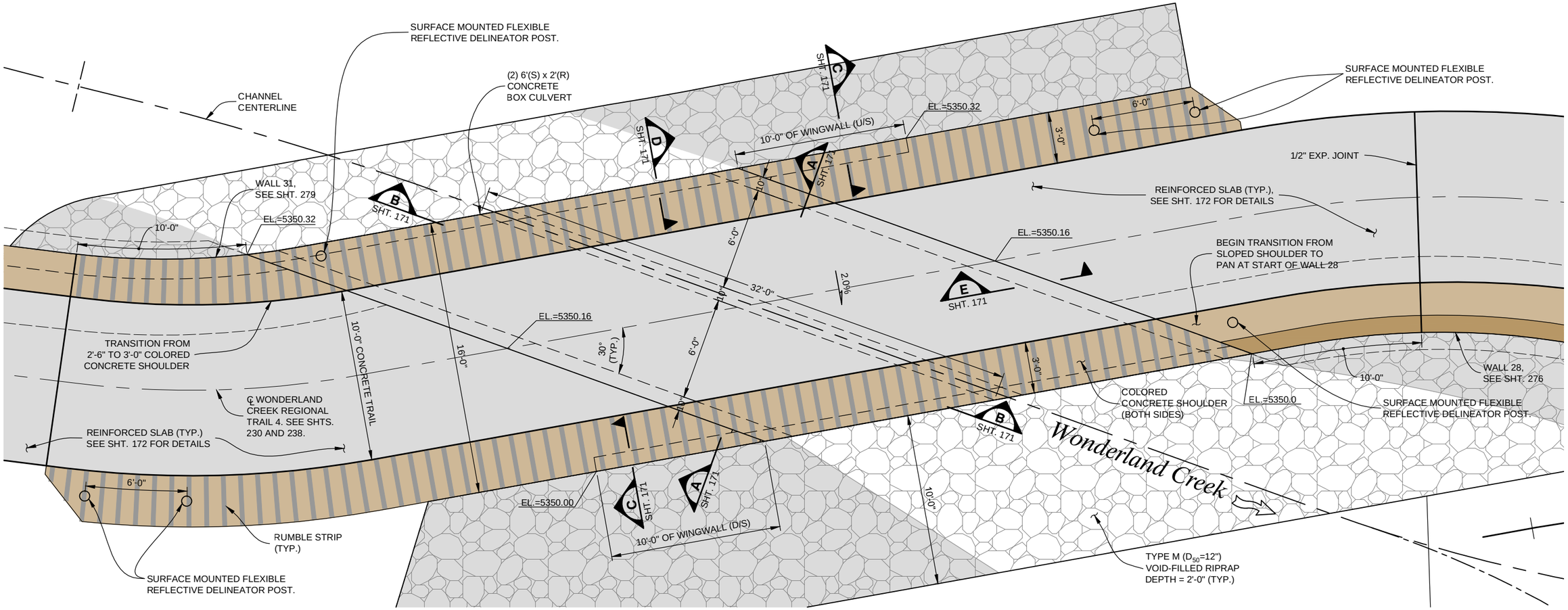

TRAIL CROSSING PLAN

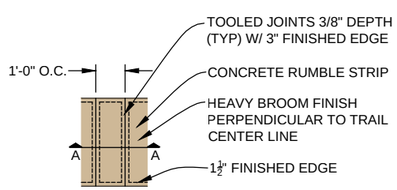

TYPICAL RUMBLE STRIP SCORING PLAN

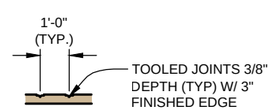

SECTION A-A

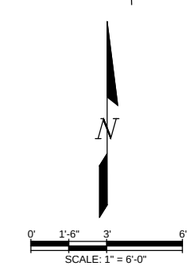

NOTES:

1. ALL CONCRETE SHALL BE CDOT CLASS D.
2. ALL REINFORCING STEEL SHALL BE GRADE 60 KSI.

Computer File Information		
Creation Date: 01/23/15	Initials: JHK	
Last Modification Date: 06/18/15	Initials: JHK	
Full Path: P:\11-039.03\WONDERLAND\CAD		
Drawing File Name: 11-039.03_WINDING PEDESTRIAN CROSSING.dwg		
AutoCAD 2014	Scale: AS SHOWN	

MULLER ENGINEERING CO., INC.
CONSULTING ENGINEERS
777 S. WADSWORTH BLVD. 4-100
LAKEWOOD, COLORADO 80226
(303) 988-4939

MEC PROJECT NO. 11039.03

COLORADO REGISTERED PROFESSIONAL ENGINEER CHRISTOPHER L. KREGER 37254 6/18/15

Sheet Revisions		
Date:	Comments	Init.

As Constructed
No Revisions:
Revised:
Void:

Region 4 RDM

CITY OF BOULDER

WONDERLAND CREEK - GREENWAYS IMPROVEMENT PROJECT

WINDING TRAIL PEDESTRIAN CROSSING PLAN

Designer:	JW3	Structure Numbers	
Detailer:	JHK		
Sheet Subset:	DRAINAGE	Subset Sheets:	WT-2

Project No./Code
STM 110-081
18405
Sheet Number: 170

PLOTTED: 6/19/2015 11:00:18 AM
NAME: P:\11-039.03 WONDERLAND CREEK LOWER REACH -FINAL DESIGN\CAD\11-039.03_WINDING PEDESTRIAN CROSSING.DWG

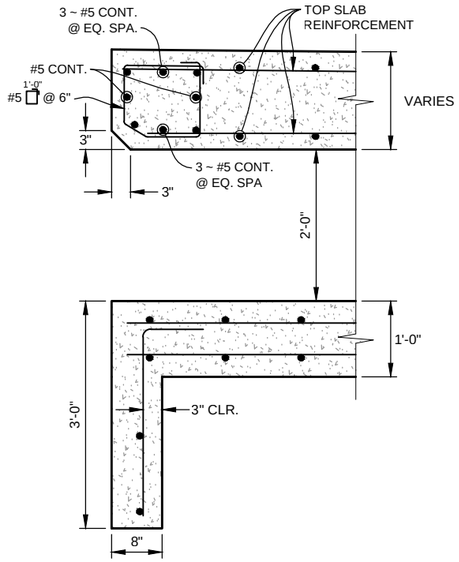

SECTION D SHT. 170

SCALE: 1/2" = 1'-0"

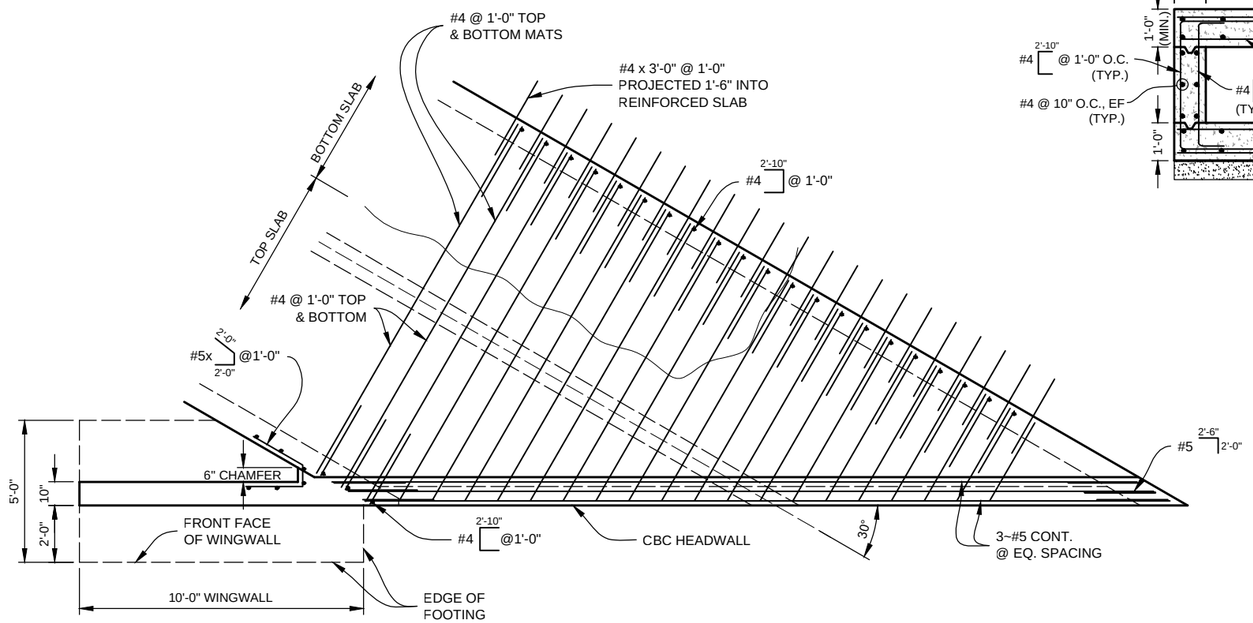

REINFORCING PLAN

0 1' 2' 4' 6'

SCALE: 3/8" = 1'-0"

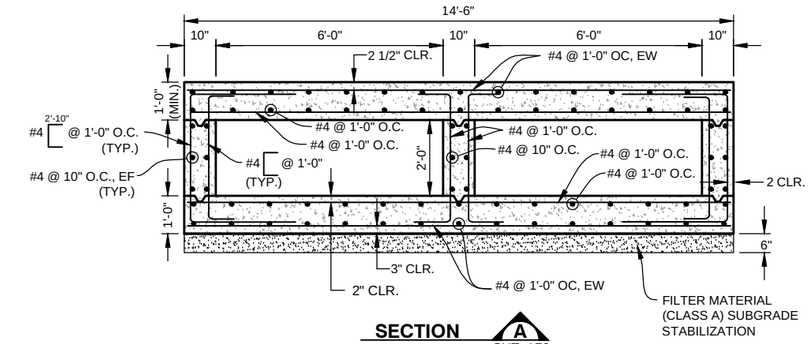

SECTION A SHT. 170

0' 1' 2' 4'

SCALE: 1/4" = 1'-0"

NOTE:
SECTION B IS SKEWED TO THE TRAIL ALIGNMENT
SO TRAIL DIMENSIONS ARE NOT TYPICAL.

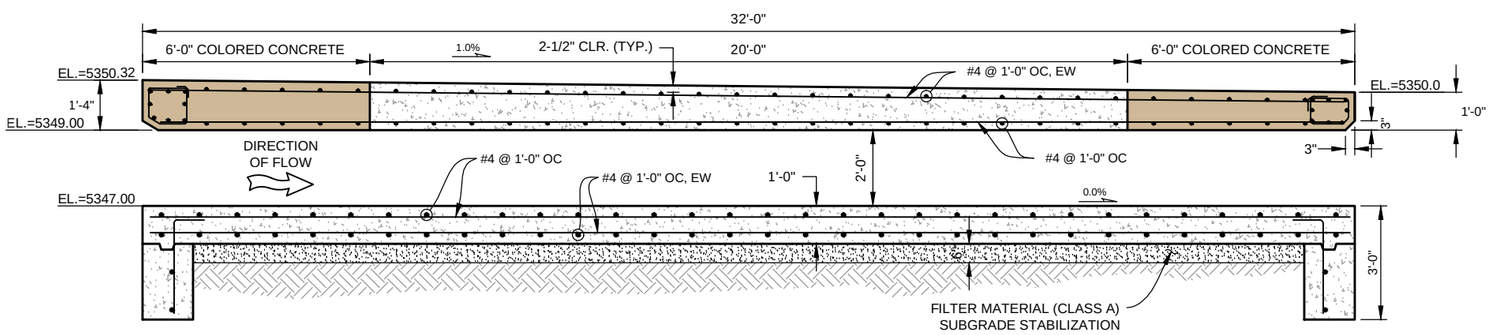

TRAIL CROSSING PROFILE B SHT. 170

0' 1' 2' 4'

SCALE: 1/4" = 1'-0"

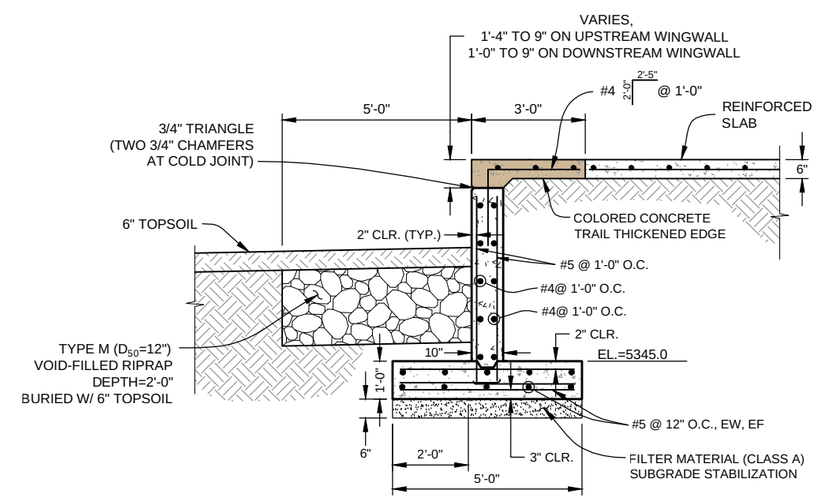

WINGWALL SECTION C SHT. 170

0' 1' 2' 4'

SCALE: 1/4" = 1'-0"

Computer File Information		
Creation Date: 01/23/15	Initials: JHK	
Last Modification Date: 06/18/15	Initials: JHK	
Full Path: P:\11-039.03\WONDERLAND\CAD		
Drawing File Name: 11-039.03_WINDING PEDESTRIAN CROSSING.dwg		
AutoCAD 2014	Scale: AS SHOWN	

MULLER ENGINEERING CO., INC.
CONSULTING ENGINEERS
777 S. WADSWORTH BLVD. 4-100
LAKEWOOD, COLORADO 80226
(303) 988-4939

MULLER

MEC PROJECT NO. 11039.03

LAKEWOOD REGISTERED PROFESSIONAL ENGINEER 32038 6-18-15

Sheet Revisions		
Date:	Comments	Init.

As Constructed

No Revisions:

Revised:

Void:

Region 4 RDM

CITY OF BOULDER

WONDERLAND CREEK - GREENWAYS IMPROVEMENT PROJECT

WINDING TRAIL PEDESTRIAN
CROSSING DETAILS

Designer:	KMA	Structure Numbers	
Detailer:	JHK		
Sheet Subset:	DRAINAGE	Subset Sheets:	WT-3

Project No./Code

STM 110-081

18405

Sheet Number: 171

PLOTTED: 6/19/2015 11:00:23 AM
NAME: P:\11-039.03 WONDERLAND CREEK LOWER REACH -FINAL DESIGN\CAD\11-039.03_WINDING PEDESTRIAN CROSSING.DWG

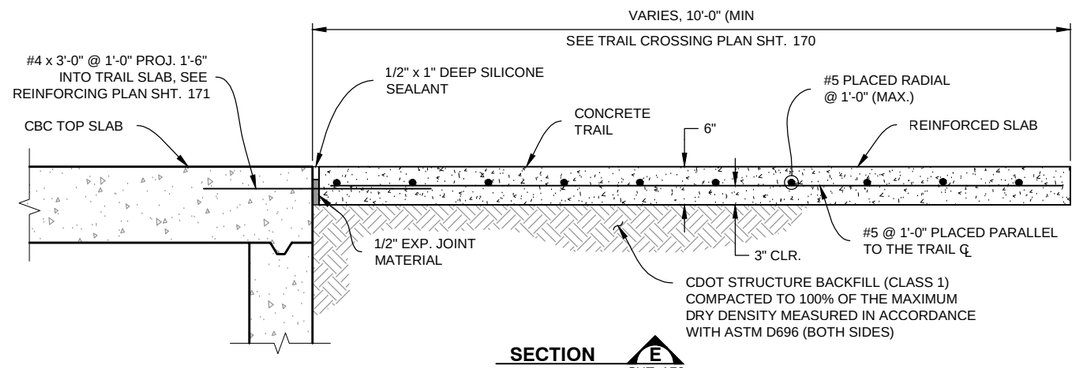

SECTION E
SHT. 170

0' 6" 1' 2'
SCALE: 1/2" = 1'-0"

PLOTTED: 6/19/2015 11:00:27 AM
NAME: P:\11-039.03 WONDERLAND CREEK LOWER REACH -FINAL DESIGN\CAD\11-039.03_WINDING PEDESTRIAN CROSSING.DWG

Computer File Information		
Creation Date: 01/23/15	Initials: JHK	
Last Modification Date: 06/18/15	Initials: JHK	
Full Path: P:\11-039.03\WONDERLAND\CAD		
Drawing File Name: 11-039.03_WINDING PEDESTRIAN CROSSING.dwg		
AutoCAD 2014	Scale: AS SHOWN	

MULLER ENGINEERING CO., INC.
CONSULTING ENGINEERS
777 S. WADSWORTH BLVD. 4-100
LAKEWOOD, COLORADO 80226
(303) 988-4939
MULLER
MEC PROJECT NO. 11039.03

COLORADO REGISTERED PROFESSIONAL ENGINEER 32038 6-18-15

Sheet Revisions		
Date:	Comments	Init.

As Constructed
No Revisions:
Revised:
Void:

Region 4 RDM
CITY OF BOULDER

WONDERLAND CREEK - GREENWAYS IMPROVEMENT PROJECT
WINDING TRAIL PEDESTRIAN CROSSING DETAILS

Designer:	KMA	Structure Numbers	
Detailer:	JHK		
Sheet Subset: DRAINAGE		Subset Sheets:	WT-4

Project No./Code
STM 110-081
18405
Sheet Number: 172

STRUCTURE GENERAL NOTES

1. ALL WORK SHALL BE DONE IN ACCORDANCE WITH THE COLORADO DEPARTMENT OF TRANSPORTATION (CDOT) STANDARD SPECIFICATIONS FOR ROAD AND BRIDGE CONSTRUCTION, 2011 EDITION, AS APPLICABLE TO THE PROJECT.
2. STRUCTURE EXCAVATION AND BACKFILL SHALL BE IN ACCORDANCE WITH CDOT STANDARD PLANS, M&S STANDARDS M-206-1, UNLESS OTHERWISE NOTED ON PLANS.
3. STRUCTURE BACKFILL FOR THE BOX CULVERT AND WINGWALLS SHALL CONFORM TO STRUCTURE BACKFILL (CLASS 1) SPECIFICATIONS, AND SHALL BE PLACED IN ACCORDANCE WITH CDOT SPECIFICATIONS, SECTION 206.
4. THE SOILS AND FOUNDATION INVESTIGATION FOR THE CONCRETE BOX CULVERT AND WINGWALLS WAS PERFORMED BY CTL THOMPSON, INC. THE SUB SURFACE CONDITIONS AND RECOMMENDATIONS FOR THE STRUCTURE ARE CONTAINED IN A REPORT DATED JULY 3, 2013, PROJ NO. DN46,599-125. REFER TO THE PROJECT SPECIFICATIONS FOR COPIES OF THESE REPORTS.
5. THE BOTTOM SLAB OF THE BOX CULVERT, AND THE WINGWALL FOOTINGS SHALL NOT BE PLACED UNTIL SUBGRADE IS OBSERVED AND APPROVED IN WRITING BY THE ENGINEER.
6. EXPANSION JOINT MATERIAL SHALL MEET AASHTO SPECIFICATION M-213.
7. THE COST FOR EXPANSION JOINT MATERIAL SHALL NOT BE PAID FOR SEPARATELY BUT SHALL BE INCLUDED IN THE WORK.
8. WATER STOPS SHALL MEET THE REQUIREMENTS OF CDOT SPECIFICATIONS, SECTION 518.
9. STRUCTURAL CONCRETE EXPOSED TO SOIL SHALL CONFORM TO CEMENTITIOUS MATERIALS REQUIREMENTS CLASS 0 CORRESPONDING TO SULFATE EXPOSURE CLASS 0.
10. ALL CONCRETE SHALL BE CLASS D (BOX CULVERT)
11. ALL CONSTRUCTION JOINTS SHALL BE THOROUGHLY CLEANED AND ROUGHENED BEFORE FRESH CONCRETE IS PLACED.
12. ALL CONSTRUCTION JOINTS NOT SHOWN ON THE PLANS SHALL BE APPROVED BY THE ENGINEER.
13. WINGWALL FOOTINGS AND BOTTOM SLAB OF BOX CULVERT SHALL BE PLACED MONOLITHICALLY.
14. THE CONTRACTOR SHALL BE RESPONSIBLE FOR THE STABILITY OF THE STRUCTURE DURING CONSTRUCTION.
15. THE CONTRACTOR SHALL NOT BACKFILL STRUCTURES UNTIL TOP SLAB AND WALLS HAVE REACHED 80% OF DESIGN STRENGTH.
16. ALL EXPOSED CONCRETE CORNERS SHALL BE CHAMFERED 3/4", UNLESS SHOWN OR OTHERWISE NOTED.
17. GRADE 60 REINFORCING STEEL IS REQUIRED.
18. ALL REINFORCING STEEL SHALL BE BLACK REINFORCING BARS UNLESS OTHERWISE NOTED.
19. THE FOLLOWING TABLE GIVES THE MINIMUM CLASS B LAP SPLICE LENGTH FOR BLACK (NON-EPOXY COATED) REINFORCING BARS PLACED IN ACCORDANCE WITH SUBSECTION 602.06, THESE SPLICE LENGTH SHALL INCREASE BY 25% FOR BARS SPACED LESS THAN 6" ON CENTER.

BAR SIZE:	#4	#5	#6	#7	#8	#9	#10	#11
SPLICE LENGTH FOR CLASS D CONCRETE:	1'-0"	1'-4"	1'-7"	1'-11"	2'-6"	3'-1"	3'-11"	4'-10"

20. ALL REINFORCEMENT SHALL HAVE A CLEAR COVERAGE OF 2", EXCEPT AS SHOWN ON THE PLANS. CLEAR COVERAGE SHALL BE MEASURED FROM THE SURFACE OF THE CONCRETE TO THE OUTSIDE OF THE REINFORCEMENT.
21. THE STOCK LENGTH USED FOR ALL REINFORCING IS 60 FEET.
22. ALL TRANSVERSE REINFORCING SHAIL BE NORMAL TO THE CENTERLINE OF THE BOX.
23. FILTER MATERIAL AND CLOTH FOR WINGWALL DRAIN HOLES SHALL BE INCLUDED IN WORK.
24. THE CONTRACTOR SHALL BE RESPONSIBLE FOR THE STABILITY OF THE STRUCTURE DURING CONSTRUCTION.
25. ALL DIMENSIONS ARE PERPENDICULAR TO THE CENTERLINE OF THE BOX.
26. STATIONS, ELEVATIONS, AND DIMENSIONS CONTAINED IN THESE PLANS ARE CALCULATED FROM A RECENT FIELD SURVEY. THE CONTRACTOR SHALL VERIFY ALL DEPENDENT DIMENSIONS IN THE FIELD BEFORE ORDERING OR FABRICATING ANY MATERIAL
27. THE INFORMATION SHOWN ON THESE PLANS CONCERNING-THE TYPE AND LOCATION OF UNDERGROUND UTILITIES IS NOT GUARANTEED TO BE ACCURATE OR ALL INCLUSIVE. THE CONTRACTOR IS RESPONSIBLE FOR MAKING HIS OWN DETERMINATION AS TO THE TYPE AND LOCATION OF UNDERGROUND UTILITIES AS MAY BE NECESSARY TO AVOID DAMAGE THERETO. THE CONTRACTOR SHALL CONTACT THE UTILITY NOTIFICATION CENTER OF COLORADO AT 1-800-922-1987 AT LEAST 2 DAYS (NOT INCLUDING THE DAY OF NOTIFICATION) PRIOR TO ANY EXCAVATION OR OTHER EARTHWORK.
28. A STRUCTURAL CONCRETE COATING SHALL BE APPLIED TO ALL GRAY CONCRETE (NO INTEGRAL COLOR) EXPOSED SURFACES TO 1'-0" BELOW FINAL GRADE UNLESS OTHERWISE NOTED. THE COLOR SHALL BE EQUIVALENT TO FEDERAL STANDARD 595B, COLOR NO. 33522 (LIGHT TAN). TEST PANELS SHALL BE SUBMITTED IN ACCORDANCE WITH CDOT STANDARD SPECIFICATION 601.14(B) 4

DESIGN DATA

REINFORCEMENT PER CDOT M&S STANDARDS FOR
TRIPLE 16'(S) x 6'(R) CONCRETE BOX CULVERT

Know what's **below**
Call before you dig.

PLOTTED: 6/19/2015 11:00:40 AM
NAME: P:\11-039.03 WONDERLAND CREEK LOWER REACH - FINAL DESIGN\CAD\11-039.03_WT INFO.DWG

Computer File Information	
Creation Date: 05/30/15	Initials: JHK
Last Modification Date: 06/18/15	Initials: JHK
Full Path: P:\11-039.03\CAD	
Drawing File Name: 11-039.03_WT INFO.dwg	
AutoCAD 2014	Scale: AS SHOWN

MULLER ENGINEERING CO., INC.
MULLER
CONSULTING ENGINEERS
777 S. WADSWORTH BLVD. 4-100
LAKEWOOD, COLORADO 80226
(303) 988-4939
MEC PROJECT NO. 11039.03

COLORADO LICENSED JONATHON L. KNAPP 49227 6/18/15 PROFESSIONAL ENGINEER

Sheet Revisions		
Date:	Comments	Init.

As Constructed
No Revisions:
Revised:
Void:

Region 4 RDM

CITY OF BOULDER

WONDERLAND CREEK - GREENWAYS IMPROVEMENT PROJECT
WINDING TRAIL CULVERT
GENERAL INFORMATION

Designer:	KMA	Structure Numbers	
Detailer:	JHK		
Sheet Subset:	DRAINAGE	Subset Sheets:	WTC-1

Project No./Code
STM 110-081
18405
Sheet Number: 173

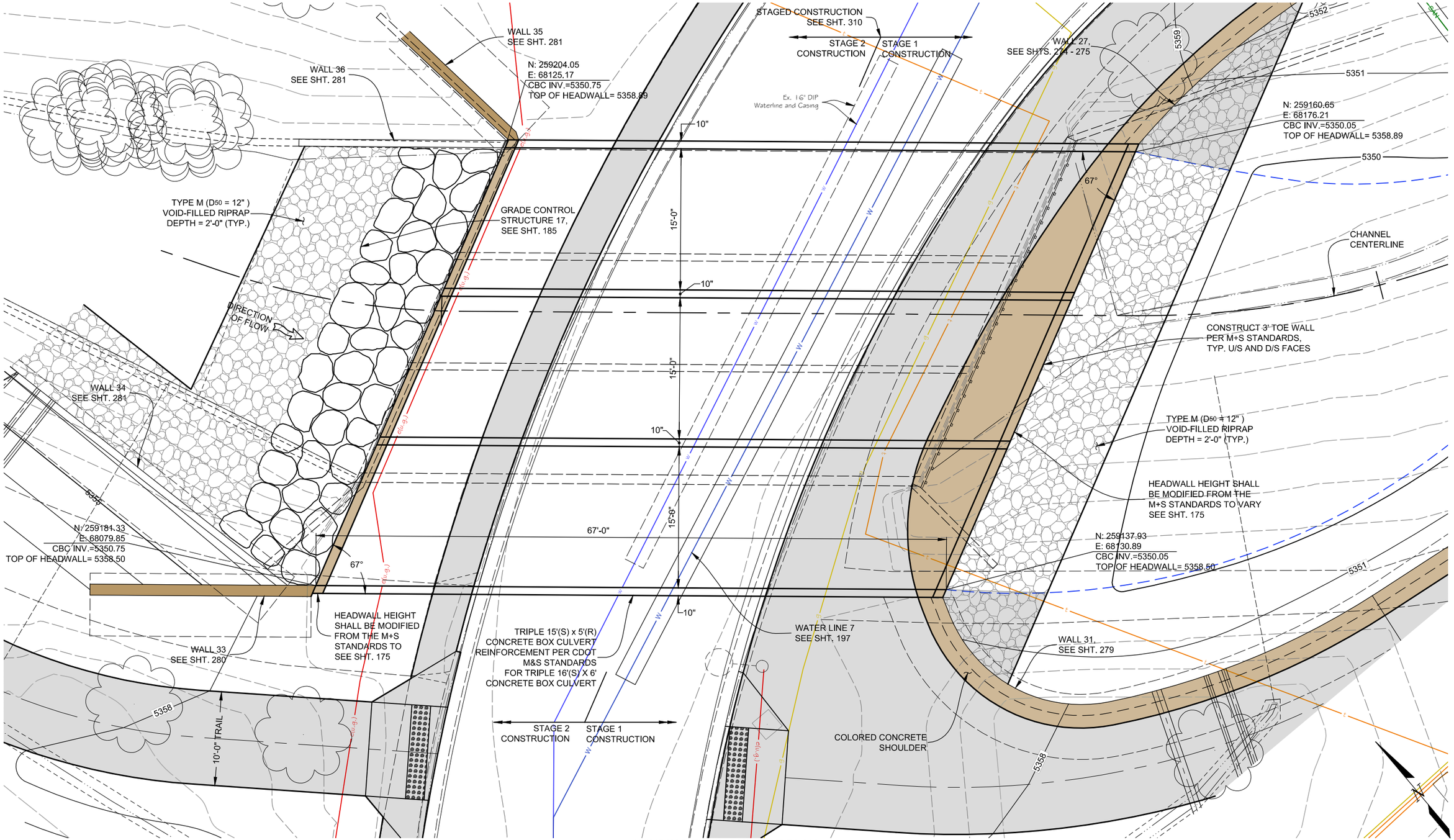

WINDING TRAIL CULVERT PLAN

PLOTTED: 6/19/2015 11:01:21 AM
NAME: P:\11-039.03 WONDERLAND CREEK LOWER REACH -FINAL DESIGN\CAD\11-039.03_STR WINDING TRAIL CBC.DWG

Computer File Information	
Creation Date: 03/06/15	Initials: JHK
Last Modification Date: 06/18/15	Initials: JHK
Full Path: P:\11-039.03\CAD	
Drawing File Name: 11-039.03_STR WINDING TRAIL CBC.dwg	
AutoCAD 2014	Scale: AS SHOWN

MULLER ENGINEERING CO., INC.
CONSULTING ENGINEERS
777 S. WADSWORTH BLVD. 4-100
LAKEWOOD, COLORADO 80226
(303) 988-4939
MULLER
MEC PROJECT NO. 11039.03

COLORADO REGISTERED PROFESSIONAL ENGINEER CHRISTOPHER L. KREGER 37254 6/18/15

Sheet Revisions		
Date:	Comments	Init.

As Constructed
No Revisions:
Revised:
Void:

Region 4 RDM
CITY OF BOULDER

WONDERLAND CREEK - GREENWAYS IMPROVEMENT PROJECT
WINDING TRAIL CULVERT PLAN

Designer:	JW3	Structure Numbers	
Detailer:	JHK		
Sheet Subset:	DRAINAGE	Subset Sheets:	WTC-2

Project No./Code
STM 110-081
18405
Sheet Number: 174

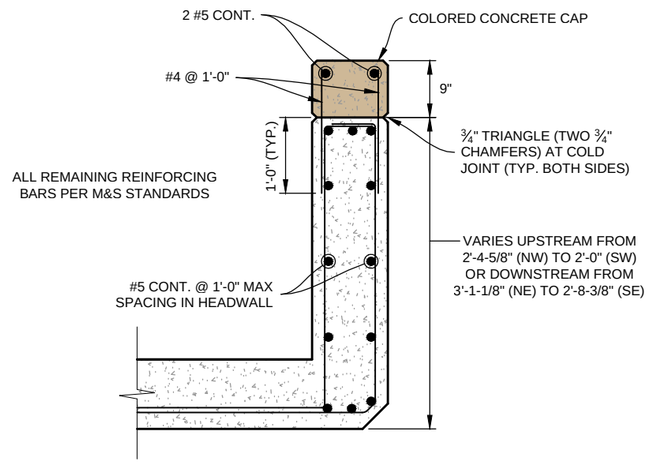

HEADWALL AND CAP DETAIL

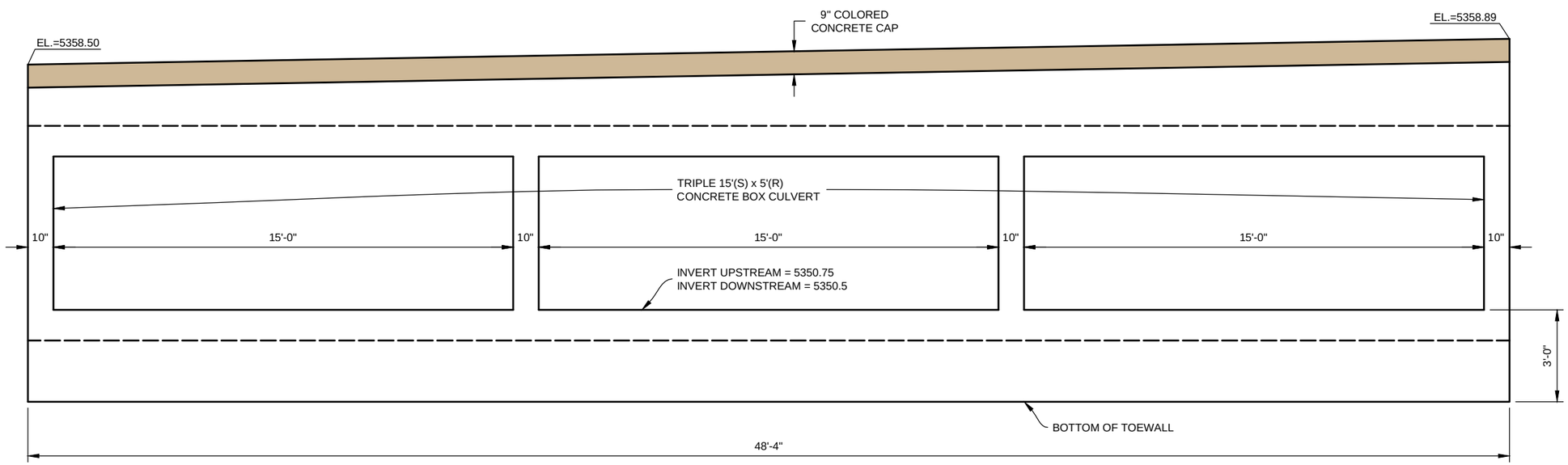

ELEVATION

Computer File Information		
Creation Date: 03/06/15	Initials: JHK	
Last Modification Date: 06/18/15	Initials: JHK	
Full Path: P:\11-039.03\CAD		
Drawing File Name: 11-039.03_STR WINDING TRAIL CBC.dwg		
AutoCAD 2014	Scale: AS SHOWN	

MULLER ENGINEERING CO., INC.
CONSULTING ENGINEERS
777 S. WADSWORTH BLVD. 4-100
LAKEWOOD, COLORADO 80226
(303) 988-4939

MEC PROJECT NO. 11039.03

COLORADO LICENSED JONATHON L. KNAPP 49227 6/18/15 PROFESSIONAL ENGINEER

Sheet Revisions		
Date:	Comments	Init.

As Constructed
No Revisions:
Revised:
Void:

Region 4 RDM

CITY OF BOULDER

WONDERLAND CREEK - GREENWAYS IMPROVEMENT PROJECT

WINDING TRAIL CULVERT DETAILS

Designer:	JW3	Structure Numbers	
Detailer:	JHK		
Sheet Subset:	DRAINAGE	Subset Sheets:	WCT-3

Project No./Code
STM 110-081
18405
Sheet Number: 175

PLOTTED: 6/19/2015 11:01:26 AM
NAME: P:\11-039.03 WONDERLAND CREEK LOWER REACH -FINAL DESIGN\CAD\11-039.03_STR WINDING TRAIL CBC.DWG

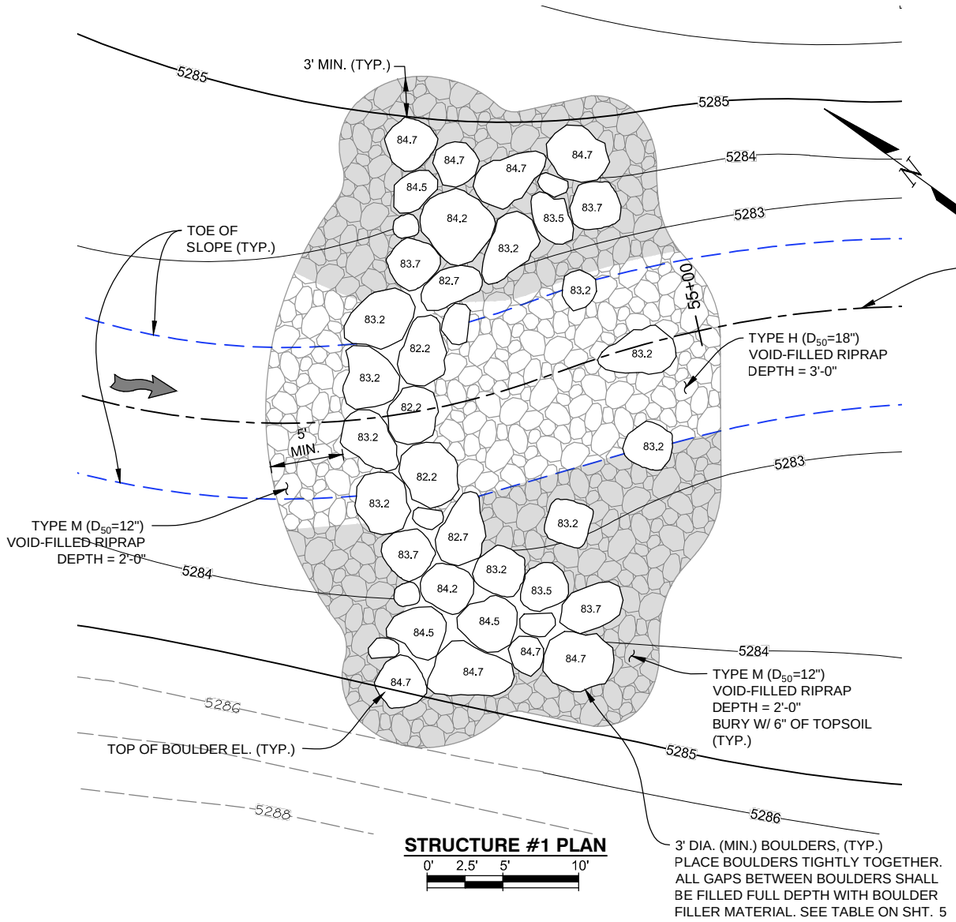

STRUCTURE #1 PLAN

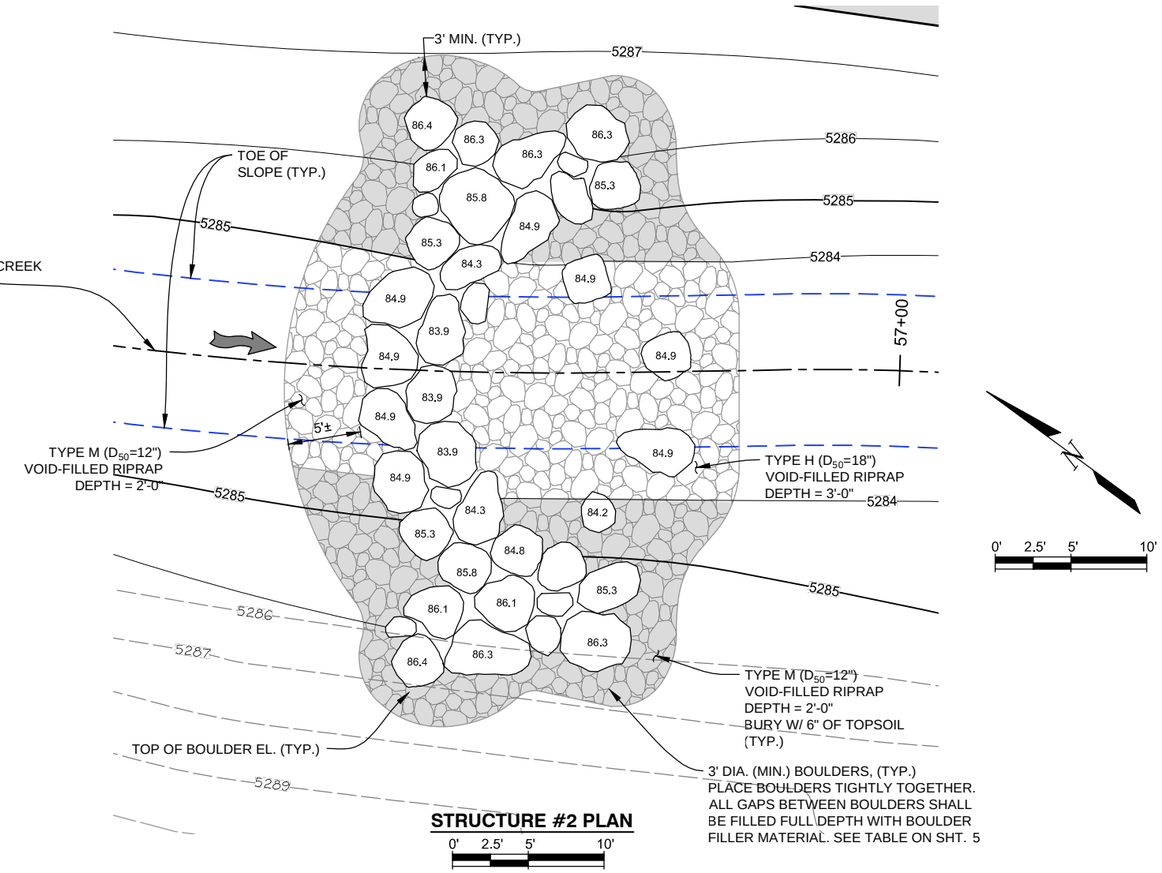

STRUCTURE #2 PLAN

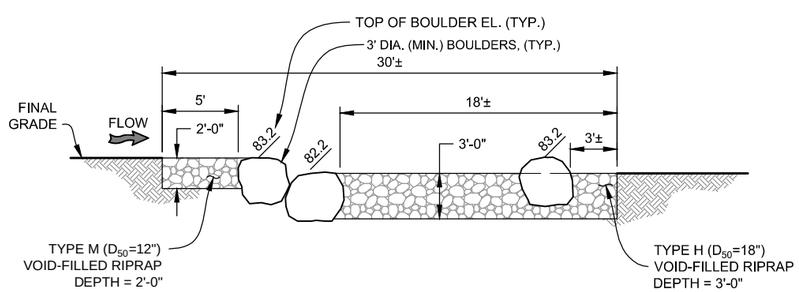

STRUCTURE #1 PROFILE

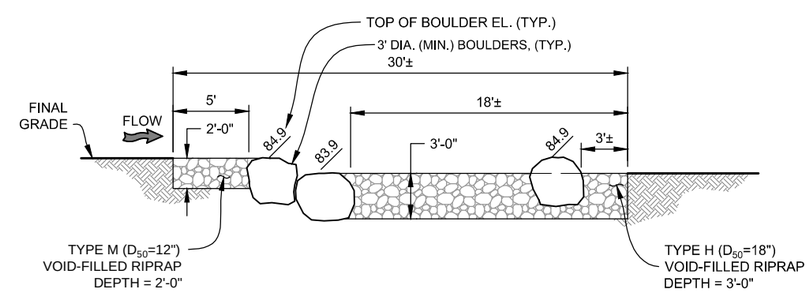

STRUCTURE #2 PROFILE

PLOTTED: 6/19/2015 11:02:51 AM
NAME: P:\11-039.03 WONDERLAND CREEK LOWER REACH - FINAL DESIGN\CAD\11-039.03_GRADE CONTROL PLAN.DWG

Computer File Information	
Creation Date: 06/10/14	Initials: JHK
Last Modification Date: 06/18/15	Initials: JHK
Full Path: P:\11-039.03\CAD	
Drawing File Name: 11-039.03_GRADE CONTROL PLAN.dwg	
AutoCAD 2014	Scale: AS SHOWN

MULLER ENGINEERING CO., INC.
CONSULTING ENGINEERS
777 S. WADSWORTH BLVD. 4-100
LAKEWOOD, COLORADO 80226
(303) 988-4939
MULLER
MEC PROJECT NO. 11039.03

COLORADO REGISTERED PROFESSIONAL ENGINEER CHRISTOPHER L. KRIEGER 37254 6/18/15

Sheet Revisions		
Date:	Comments	Init.

As Constructed
No Revisions:
Revised:
Void:

Region 4 RDM
CITY OF BOULDER

WONDERLAND CREEK - GREENWAYS IMPROVEMENT PROJECT
GRADE CONTROL STRUCTURES
#1 AND #2 DETAILS

Designer:	JW3	Structure Numbers	
Detailer:	JHK		
Sheet Subset:	DRAINAGE	Subset Sheets:	GSC-1

Project No./Code
STM 110-081
18405
Sheet Number: 176

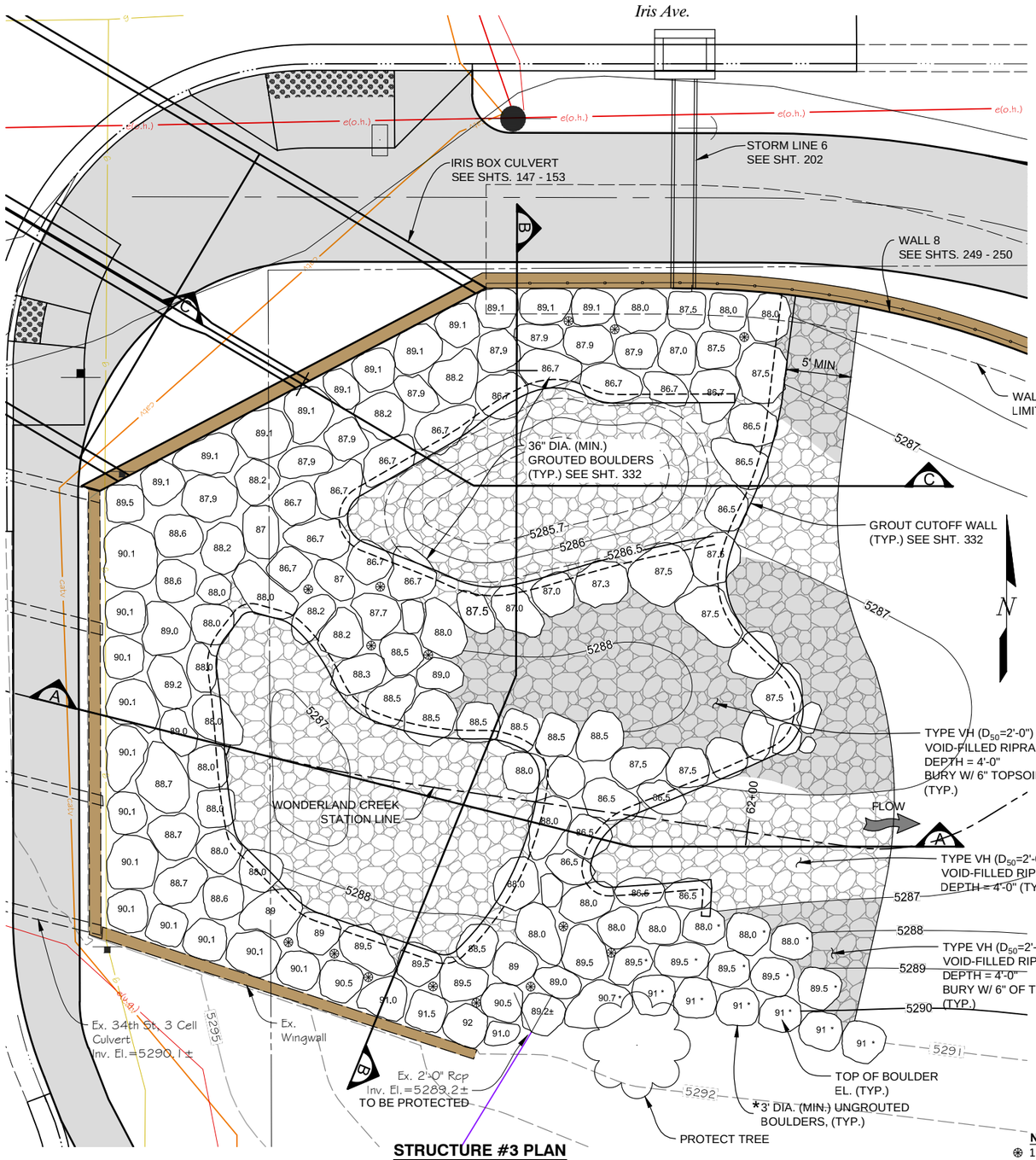

STRUCTURE #3 PLAN

0' 2.5' 5' 10'

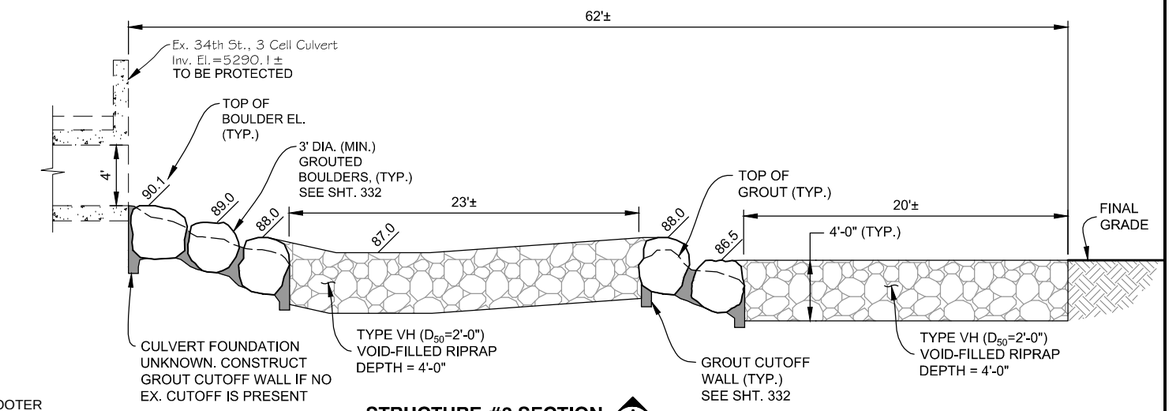

STRUCTURE #3 SECTION A

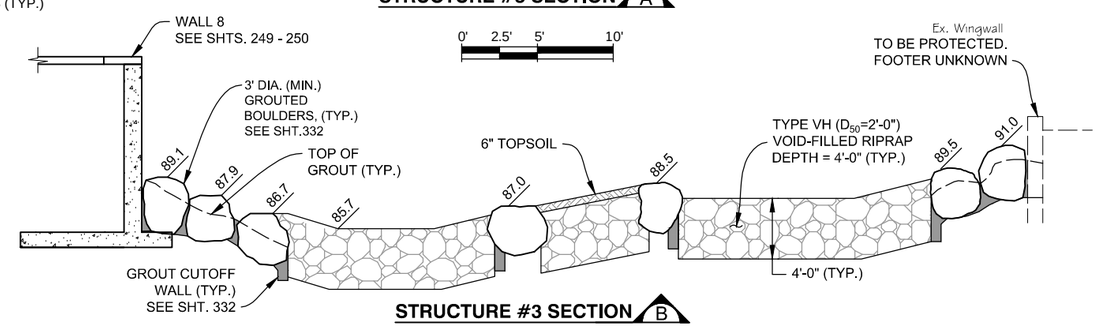

STRUCTURE #3 SECTION B

0' 2.5' 5' 10'

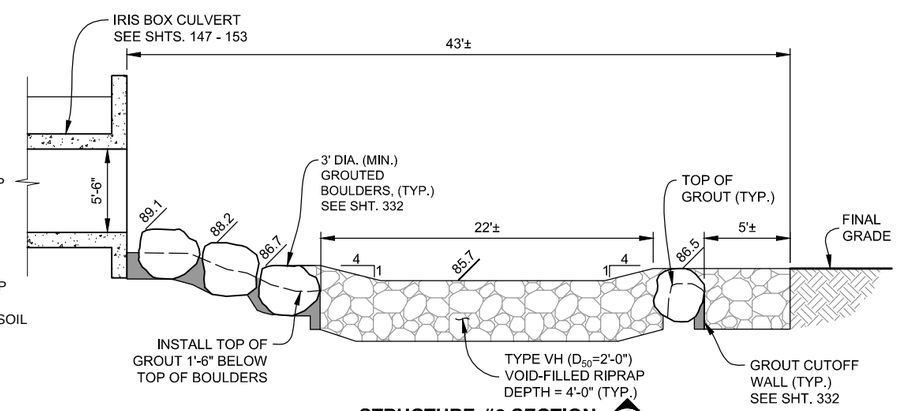

STRUCTURE #3 SECTION C

0' 2.5' 5' 10'

NOTE:

⊛ 15 PLANTING POCKETS SHALL BE CONSTRUCTED WITHIN THE LIMITS OF THE GROUTED BOULDERS. PLANTING POCKETS SHALL CONSIST OF 6" TO 12" DIAMETER HOLES CONSTRUCTED THROUGH GROUT, BETWEEN BOULDERS AS DIRECTED BY ENGINEER.

Computer File Information	
Creation Date: 06/10/14	Initials: JHK
Last Modification Date: 06/18/15	Initials: JHK
Full Path: P:\11-039.03\CAD	
Drawing File Name: 11-039.03_GRADE CONTROL PLAN.dwg	
AutoCAD 2014	Scale: AS SHOWN

MULLER ENGINEERING CO., INC.
CONSULTING ENGINEERS
777 S. WADSWORTH BLVD. 4-100
LAKEWOOD, COLORADO 80226
(303) 988-4939
MULLER
MEC PROJECT NO. 11039.03

COLORADO REGISTERED PROFESSIONAL ENGINEER CHRISTOPHER L. KRAGEBEIN 37254 6/18/15

Sheet Revisions		
Date:	Comments	Init.

As Constructed
No Revisions:
Revised:
Void:

Region 4 RDM
CITY OF BOULDER

WONDERLAND CREEK - GREENWAYS IMPROVEMENT PROJECT

GRADE CONTROL STRUCTURE #3 DETAILS

Designer:	JW3	Structure Numbers	
Detailer:	JHK		
Sheet Subset:	DRAINAGE	Subset Sheets:	GSC-2

Project No./Code
STM 110-081
18405
Sheet Number: 177

PLOTTED: 6/19/2015 11:03:07 AM
NAME: P:\11-039.03 WONDERLAND CREEK LOWER REACH -FINAL DESIGN\CAD\11-039.03_GRADE CONTROL PLAN.DWG

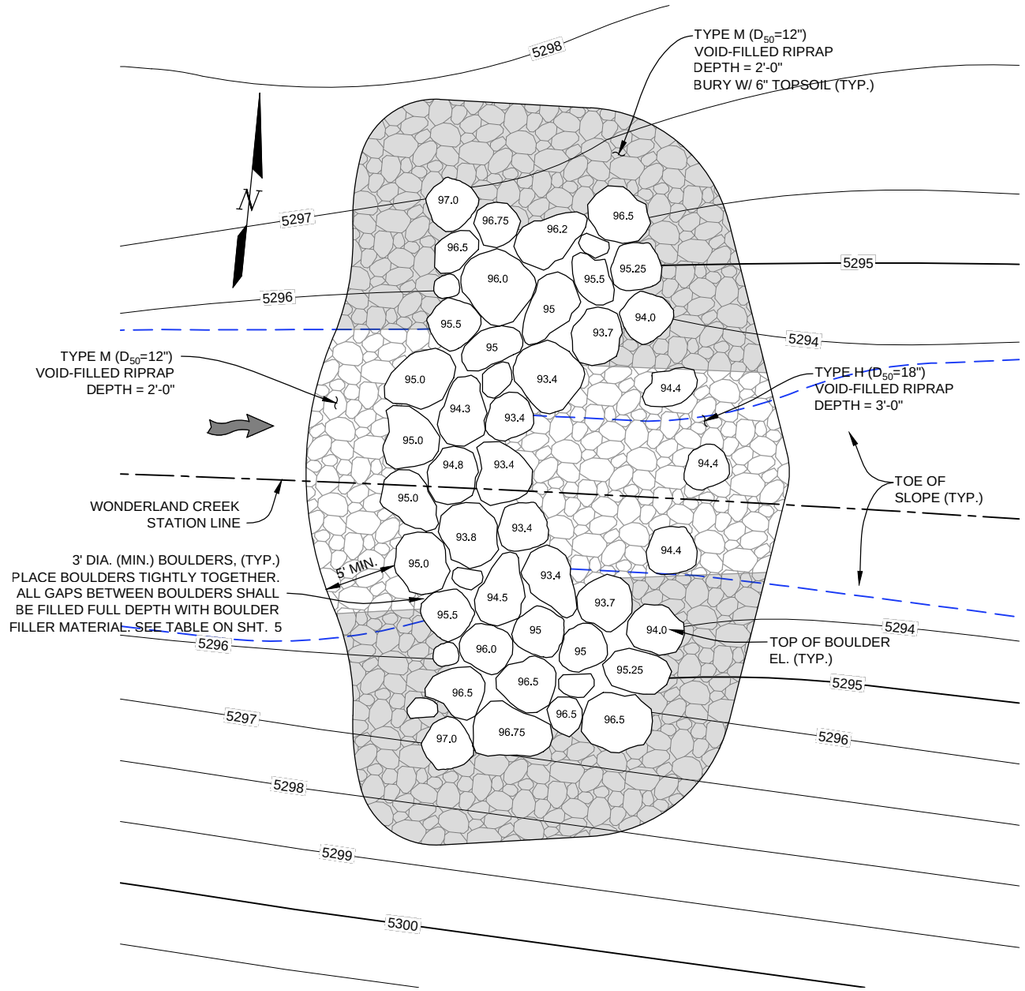

STRUCTURE #4 PLAN

0' 2.5' 5' 10'

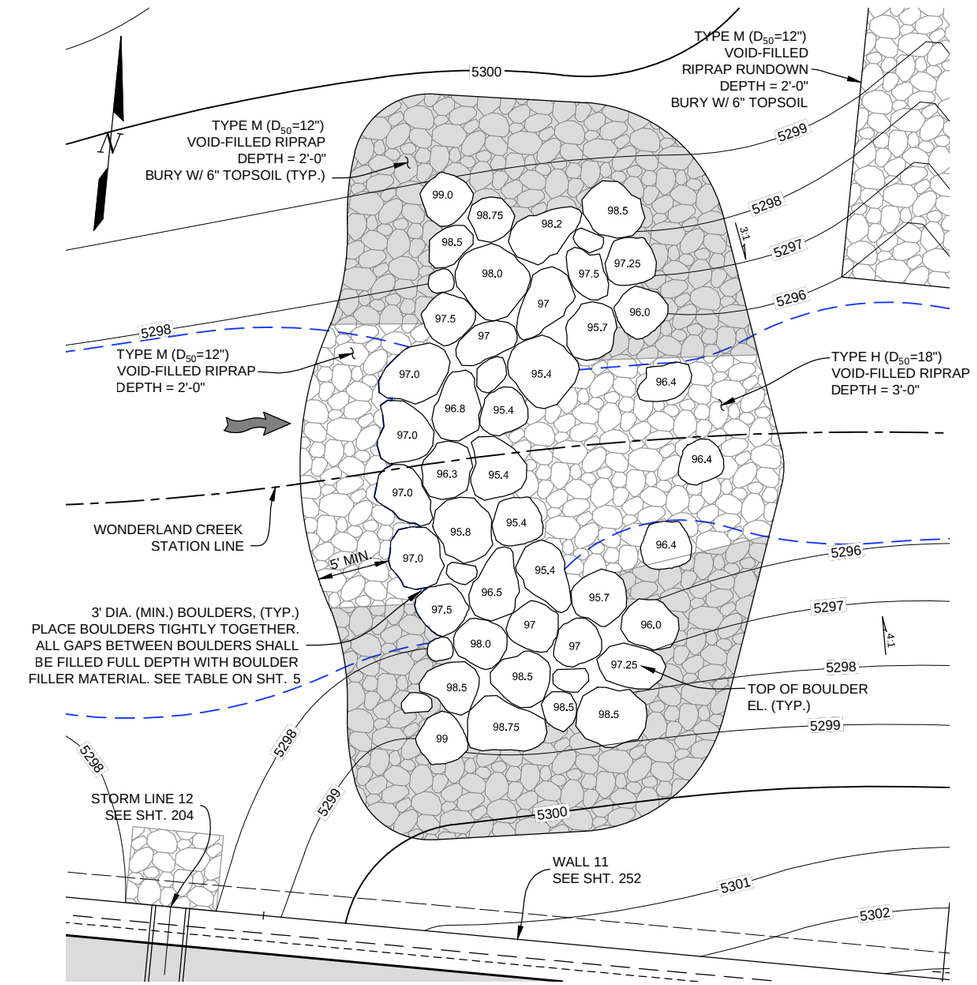

STRUCTURE #5 PLAN

0' 2.5' 5' 10'

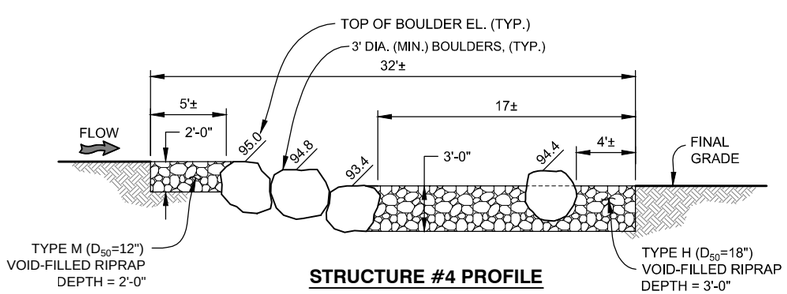

STRUCTURE #4 PROFILE

0' 2.5' 5' 10'

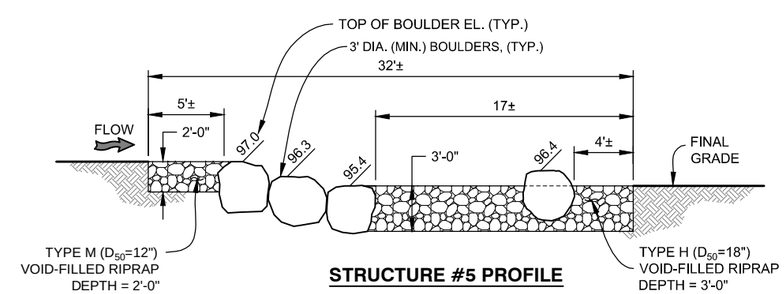

STRUCTURE #5 PROFILE

0' 2.5' 5' 10'

Computer File Information			
Creation Date: 06/10/14	Initials: JHK	MULLER ENGINEERING CO., INC. CONSULTING ENGINEERS 777 S. WADSWORTH BLVD. 4-100 LAKEWOOD, COLORADO 80226 (303) 988-4939	COLORADO REGISTERED CHRISTOPHER L. KRAGER 37254 6/18/15 PROFESSIONAL ENGINEER
Last Modification Date: 06/18/15	Initials: JHK		
Full Path: P:\11-039.03\CAD			
Drawing File Name: 11-039.03_GRADE CONTROL PLAN.dwg			
AutoCAD 2014	Scale: AS SHOWN	MEC PROJECT NO. 11039.03	

Sheet Revisions		
Date:	Comments	Init.

As Constructed

No Revisions:

Revised:

Void:

Region 4 RDM

CITY OF BOULDER

WONDERLAND CREEK - GREENWAYS IMPROVEMENT PROJECT

GRADE CONTROL STRUCTURES
#4 AND #5 DETAILS

Designer:	JW3	Structure Numbers	
Detailer:	JHK		
Sheet Subset:	DRAINAGE	Subset Sheets:	GSC-3

Project No./Code

STM 110-081

18405

Sheet Number: 178

PLOTTED: 6/19/2015 11:03:35 AM
NAME: P:\11-039.03 WONDERLAND CREEK LOWER REACH -FINAL DESIGN\CAD\11-039.03_GRADE CONTROL PLAN.DWG

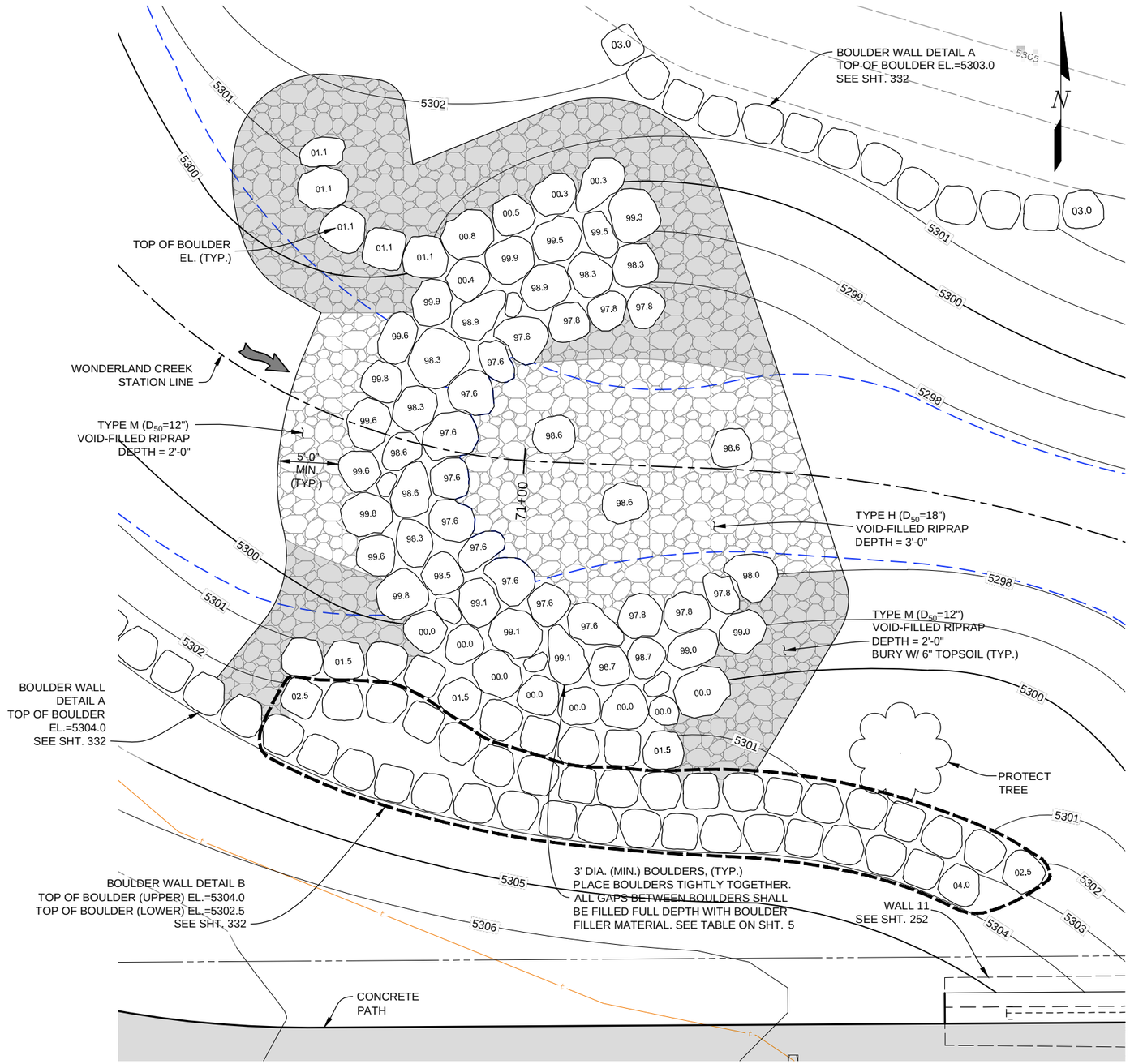

STRUCTURE #6 PLAN

0' 2.5' 5' 10'

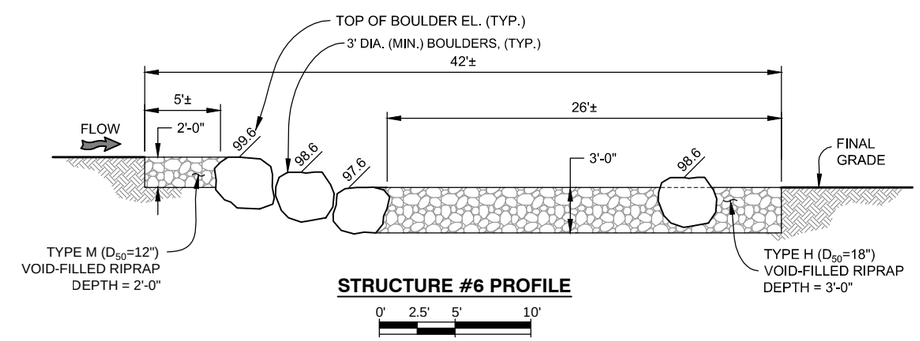

STRUCTURE #6 PROFILE

0' 2.5' 5' 10'

Computer File Information		
Creation Date: 06/10/14	Initials: JHK	
Last Modification Date: 06/18/15	Initials: JHK	
Full Path: P:\11-039.03\CAD		
Drawing File Name: 11-039.03_GRADE CONTROL PLAN.dwg		
AutoCAD 2014	Scale: AS SHOWN	

MULLER ENGINEERING CO., INC.
CONSULTING ENGINEERS
777 S. WADSWORTH BLVD. 4-100
LAKEWOOD, COLORADO 80226
(303) 988-4939
MULLER
MEC PROJECT NO. 11039.03

COLORADO REGISTERED PROFESSIONAL ENGINEER 37254 CHRISTOPHER L. KRAMER 6/18/15

Sheet Revisions		
Date:	Comments	Init.

As Constructed
No Revisions:
Revised:
Void:

Region 4 RDM

CITY OF BOULDER

WONDERLAND CREEK - GREENWAYS IMPROVEMENT PROJECT
GRADE CONTROL STRUCTURE #6
DETAILS

Designer:	JW3	Structure Numbers	
Detailer:	JHK		
Sheet Subset:	DRAINAGE	Subset Sheets:	GSC-4

Project No./Code
STM 110-081
18405
Sheet Number: 179

PLOTTED: 6/19/2015 11:03:52 AM
NAME: P:\11-039.03 WONDERLAND CREEK LOWER REACH FINAL DESIGN\CAD\11-039.03_GRADE CONTROL PLAN.DWG

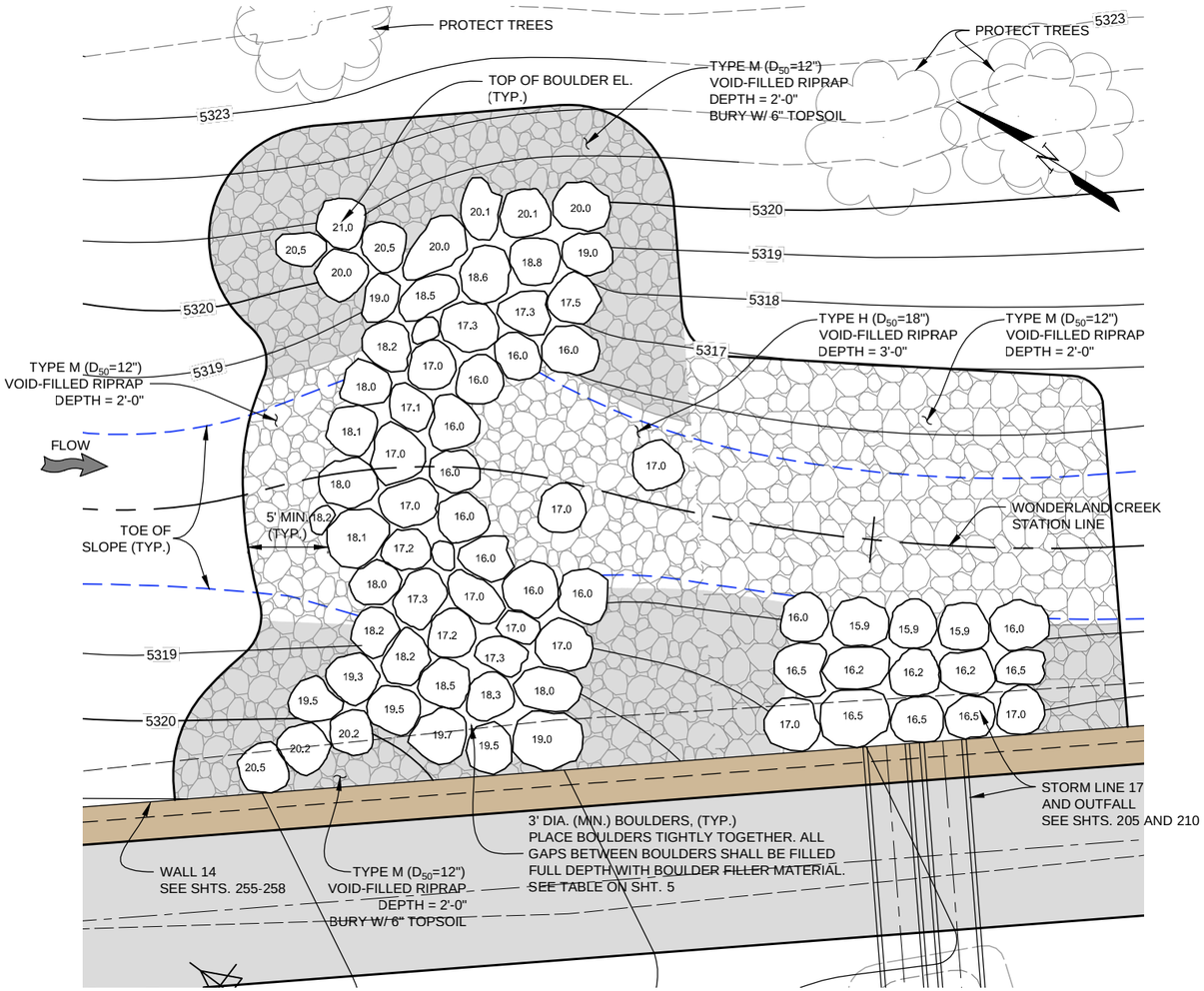

STRUCTURE #7 PLAN

0' 2.5' 5' 10'

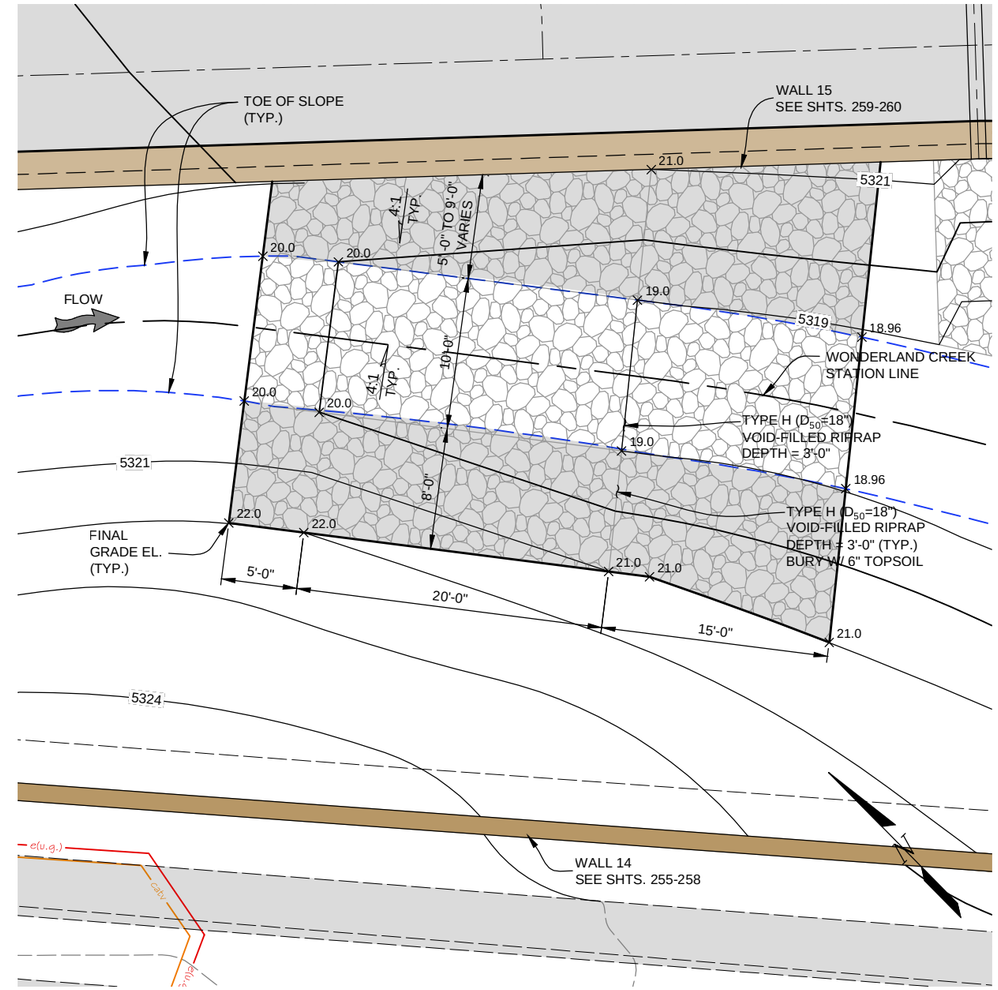

STRUCTURE #8 PLAN

0' 2.5' 5' 10'

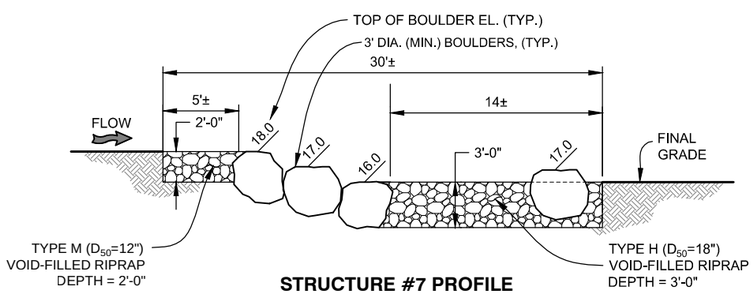

STRUCTURE #7 PROFILE

0' 2.5' 5' 10'

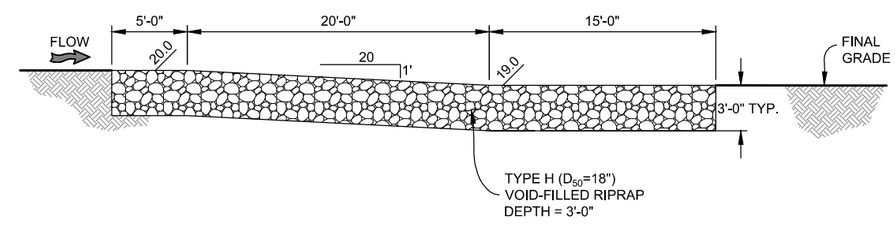

STRUCTURE #8 PROFILE

0' 2.5' 5' 10'

Computer File Information		
Creation Date: 06/10/14		Initials: JHK
Last Modification Date: 06/18/15		Initials: JHK
Full Path: P:\11-039.03\CAD		
Drawing File Name: 11-039.03_GRADE CONTROL PLAN.dwg		
AutoCAD 2014	Scale: AS SHOWN	

MULLER ENGINEERING CO., INC.
CONSULTING ENGINEERS
777 S. WADSWORTH BLVD. 4-100
LAKEWOOD, COLORADO 80226
(303) 988-4939
MULLER
MEC PROJECT NO. 11039.03

COLORADO REGISTERED PROFESSIONAL ENGINEER CHRISTOPHER L. KRIEGER 37254 6/18/15

Sheet Revisions		
Date:	Comments	Init.

As Constructed
No Revisions:
Revised:
Void:

Region 4 RDM

CITY OF BOULDER

WONDERLAND CREEK - GREENWAYS IMPROVEMENT PROJECT

GRADE CONTROL STRUCTURES #7 AND #8 DETAILS

Designer:	JW3	Structure Numbers	
Detailer:	JHK		
Sheet Subset:	DRAINAGE	Subset Sheets:	GSC-5

Project No./Code
STM 110-081
18405
Sheet Number: 180

PLOTTED: 6/19/2015 11:04:14 AM
NAME: P:\11-039.03 WONDERLAND CREEK LOWER REACH - FINAL DESIGN\CAD\11-039.03_GRADE CONTROL PLAN.DWG

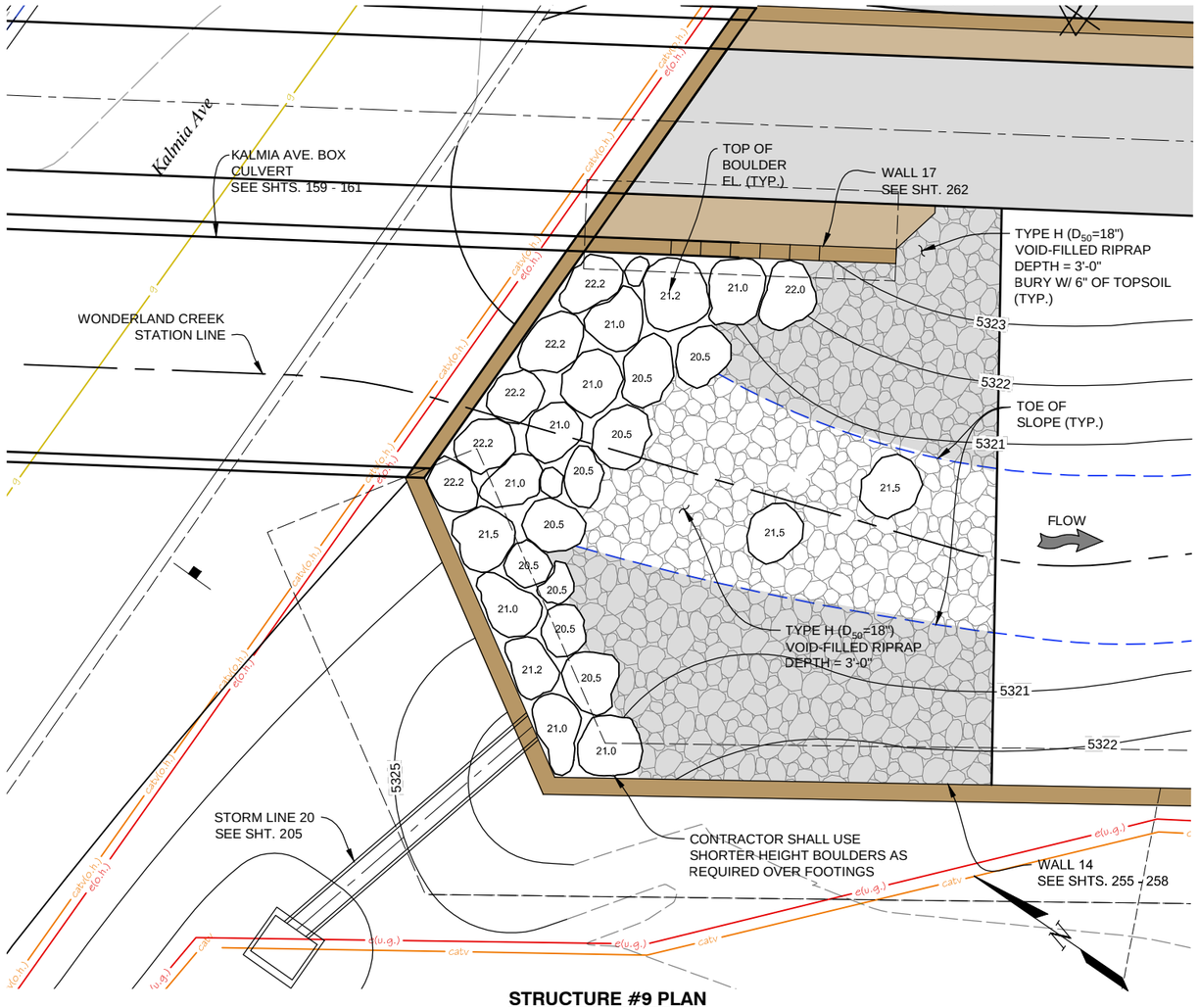

STRUCTURE #9 PLAN

0' 2.5' 5' 10'

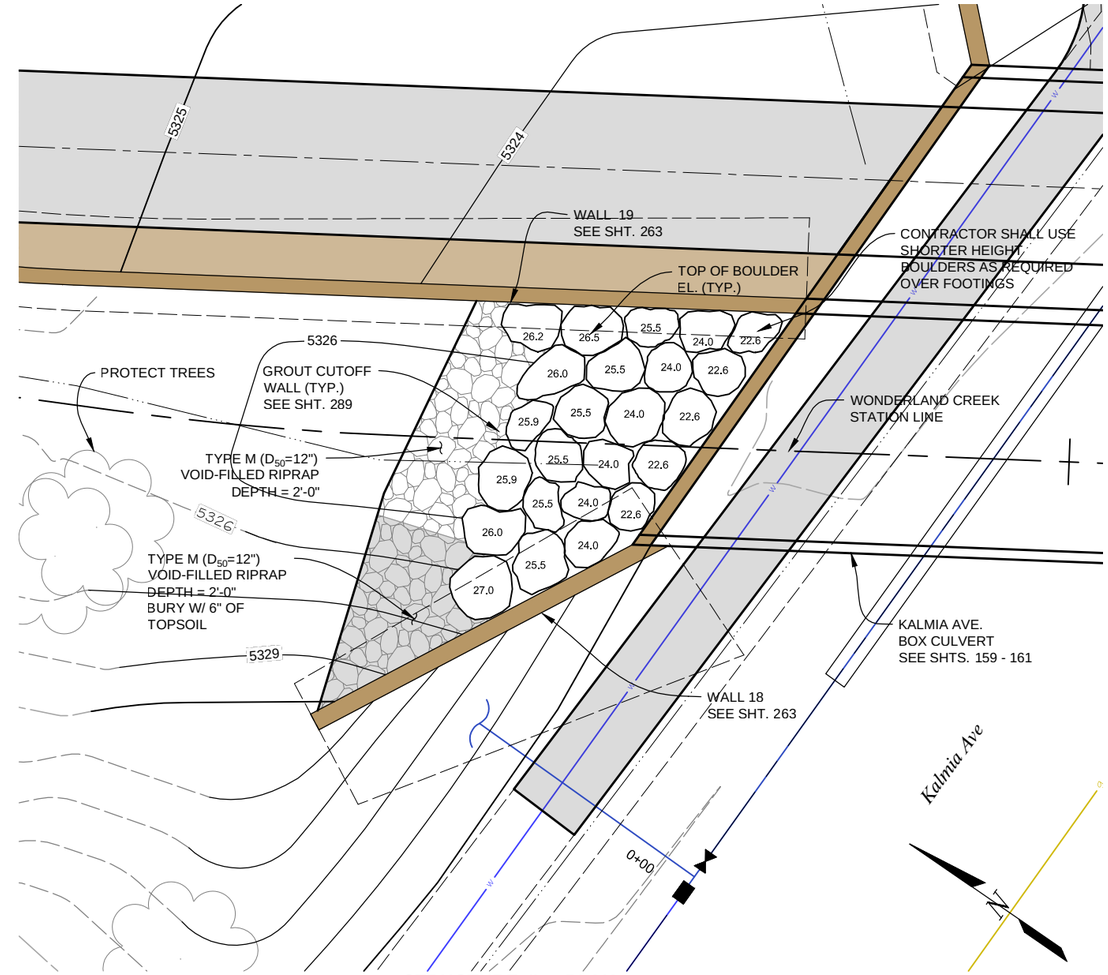

STRUCTURE #10 PLAN

0' 2.5' 5' 10'

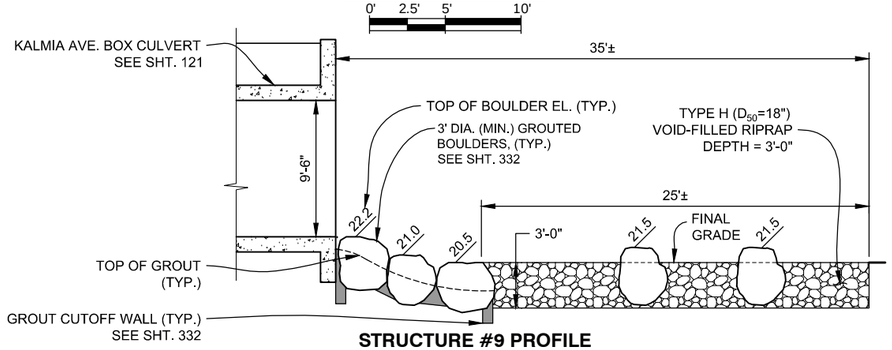

STRUCTURE #9 PROFILE

0' 2.5' 5' 10'

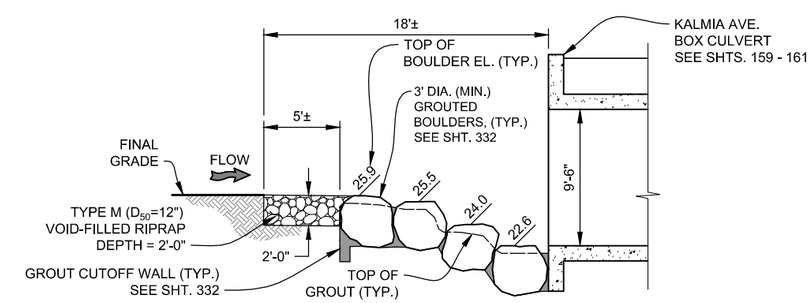

STRUCTURE #10 PROFILE

0' 2.5' 5' 10'

Computer File Information	
Creation Date: 06/10/14	Initials: JHK
Last Modification Date: 06/18/15	Initials: JHK
Full Path: P:\11-039.03\CAD	
Drawing File Name: 11-039.03_GRADE CONTROL PLAN.dwg	
AutoCAD 2014	Scale: AS SHOWN

MULLER ENGINEERING CO., INC.
CONSULTING ENGINEERS
777 S. WADSWORTH BLVD. 4-100
LAKEWOOD, COLORADO 80226
(303) 988-4939
MULLER
MEC PROJECT NO. 11039.03

COLORADO REGISTERED CHRISTOPHER L. KRIEGER 37254 6/18/15 PROFESSIONAL ENGINEER

Sheet Revisions		
Date:	Comments	Init.

As Constructed
No Revisions:
Revised:
Void:

GREENWAY AND FLOOD CONTROL DISTRICT
CDOT CO Region 4 RDM
CITY OF BOULDER

WONDERLAND CREEK - GREENWAYS IMPROVEMENT PROJECT
GRADE CONTROL STRUCTURES
#9 AND #10 DETAILS

Designer: JW3
Detailer: JHK
Sheet Subset: DRAINAGE
Structure Numbers
Subset Sheets: GSC-6

Project No./Code
STM 110-081
18405
Sheet Number: 181

PLOTTED: 6/19/2015 11:04:33 AM
NAME: P:\11-039.03 WONDERLAND CREEK LOWER REACH - FINAL DESIGN\CAD\11-039.03_GRADE CONTROL PLAN.DWG

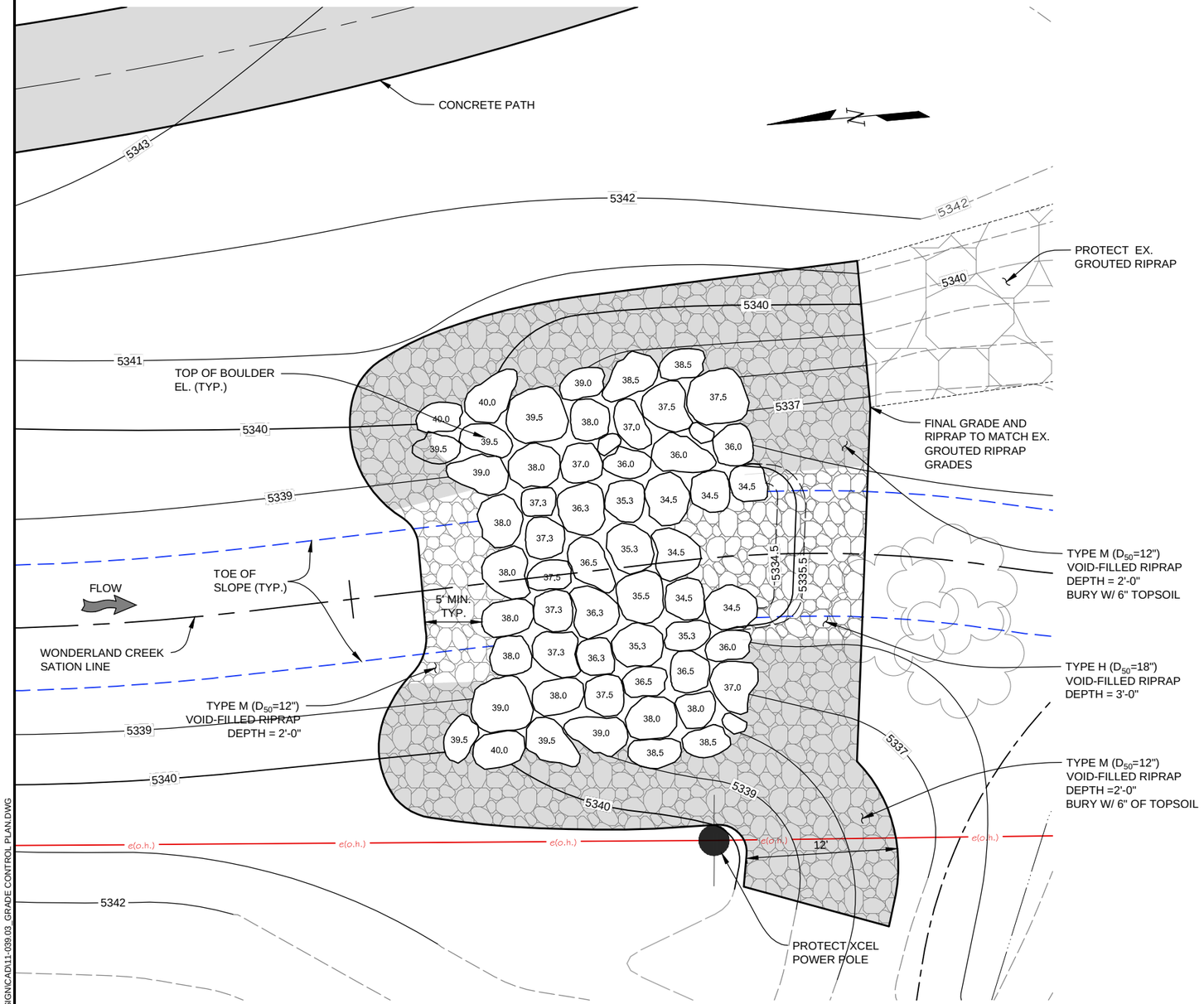

STRUCTURE #11 PLAN

0' 2.5' 5' 10'

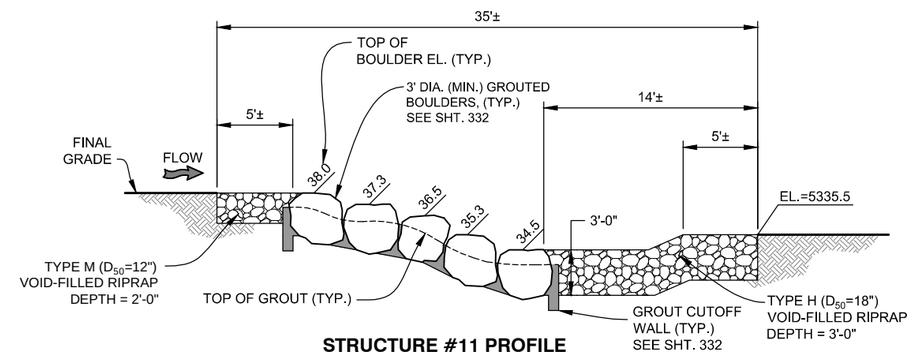

STRUCTURE #11 PROFILE

0' 2.5' 5' 10'

PLOTTED: 6/19/2015 11:04:45 AM
NAME: P:\11-039.03 WONDERLAND CREEK LOWER REACH - FINAL DESIGN\CAD\11-039.03_GRADE CONTROL PLAN.DWG

Computer File Information	
Creation Date: 06/10/14	Initials: JHK
Last Modification Date: 06/18/15	Initials: JHK
Full Path: P:\11-039.03\CAD	
Drawing File Name: 11-039.03_GRADE CONTROL PLAN.dwg	
AutoCAD 2014	Scale: AS SHOWN

MULLER ENGINEERING CO., INC.
CONSULTING ENGINEERS
777 S. WADSWORTH BLVD. 4-100
LAKEWOOD, COLORADO 80226
(303) 988-4939
MULLER
MEC PROJECT NO. 11039.03

COLORADO REGISTERED CHRISTOPHER L. KRIEGER 37254 PROFESSIONAL ENGINEER 6/18/15

Sheet Revisions		
Date:	Comments	Init.

As Constructed
No Revisions:
Revised:
Void:

Region 4 RDM
CITY OF BOULDER

WONDERLAND CREEK - GREENWAYS IMPROVEMENT PROJECT
GRADE CONTROL STRUCTURE
#11 DETAILS

Designer:	JW3	Structure Numbers	
Detailer:	JHK		
Sheet Subset:	DRAINAGE	Subset Sheets:	GSC-7

Project No./Code
STM 110-081
18405
Sheet Number: 182

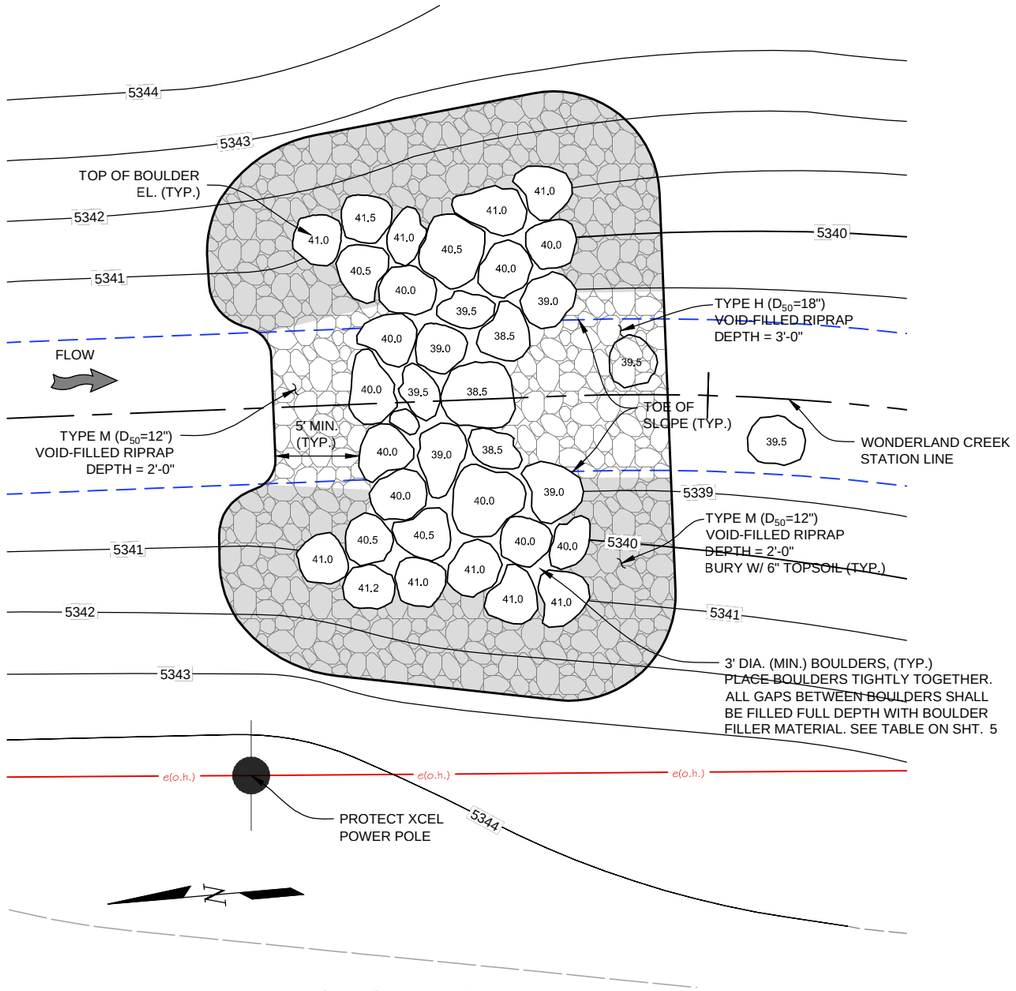

STRUCTURE #12 PLAN

0' 2.5' 5' 10'

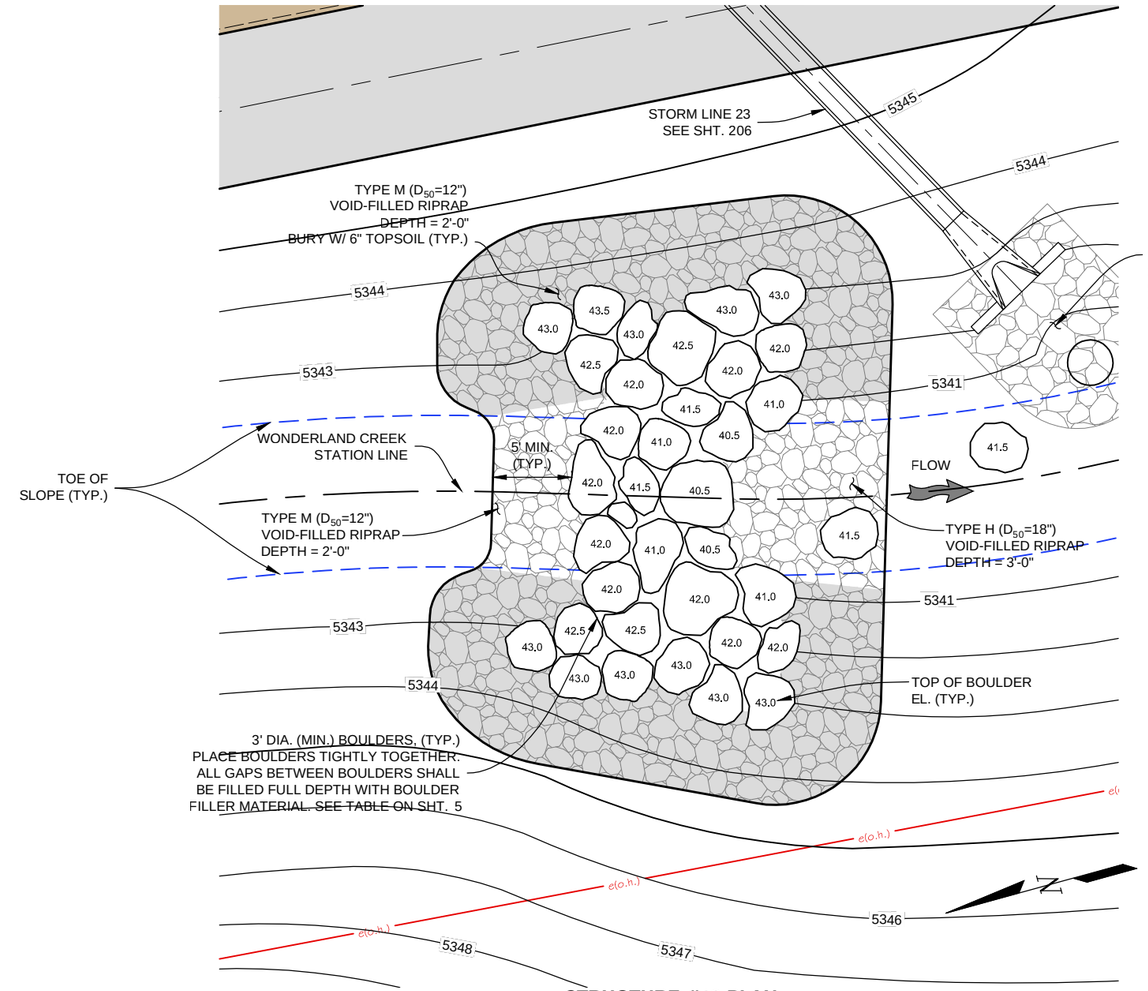

STRUCTURE #13 PLAN

0' 2.5' 5' 10'

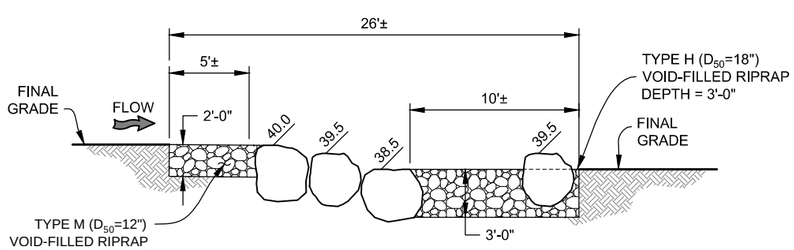

STRUCTURE #12 PROFILE

0' 2.5' 5' 10'

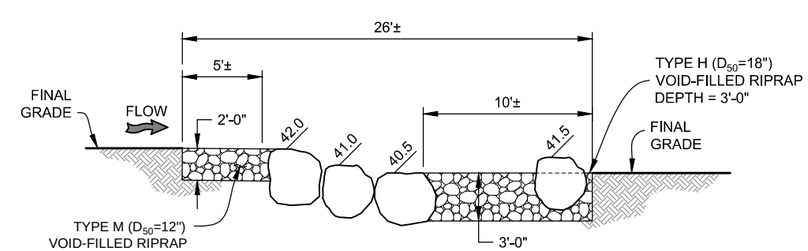

STRUCTURE #13 PROFILE

0' 2.5' 5' 10'

Computer File Information		
Creation Date: 06/10/14	Initials: JHK	
Last Modification Date: 06/18/15	Initials: JHK	
Full Path: P:\11-039.03\CAD		
Drawing File Name: 11-039.03_GRADE CONTROL PLAN.dwg		
AutoCAD 2014	Scale: AS SHOWN	

MULLER ENGINEERING CO., INC.
CONSULTING ENGINEERS
777 S. WADSWORTH BLVD. 4-100
LAKEWOOD, COLORADO 80226
(303) 988-4939
MULLER
MEC PROJECT NO. 11039.03

COLORADO REGISTERED PROFESSIONAL ENGINEER CHRISTOPHER L. KREBER 37254 6/18/15

Sheet Revisions		
Date:	Comments	Init.

As Constructed
No Revisions:
Revised:
Void:

Region 4 RDM

CITY OF BOULDER

WONDERLAND CREEK - GREENWAYS IMPROVEMENT PROJECT
GRADE CONTROL STRUCTURES
#12 & #13 DETAILS

Designer:	JW3	Structure Numbers	
Detailer:	JHK		
Sheet Subset:	DRAINAGE	Subset Sheets:	GSC-8

Project No./Code
STM 110-081
18405
Sheet Number: 183

PLOTTED: 6/19/2015 11:05:02 AM
NAME: P:\11-039.03 WONDERLAND CREEK LOWER REACH -FINAL DESIGN\CAD\11-039.03_GRADE CONTROL PLAN.DWG

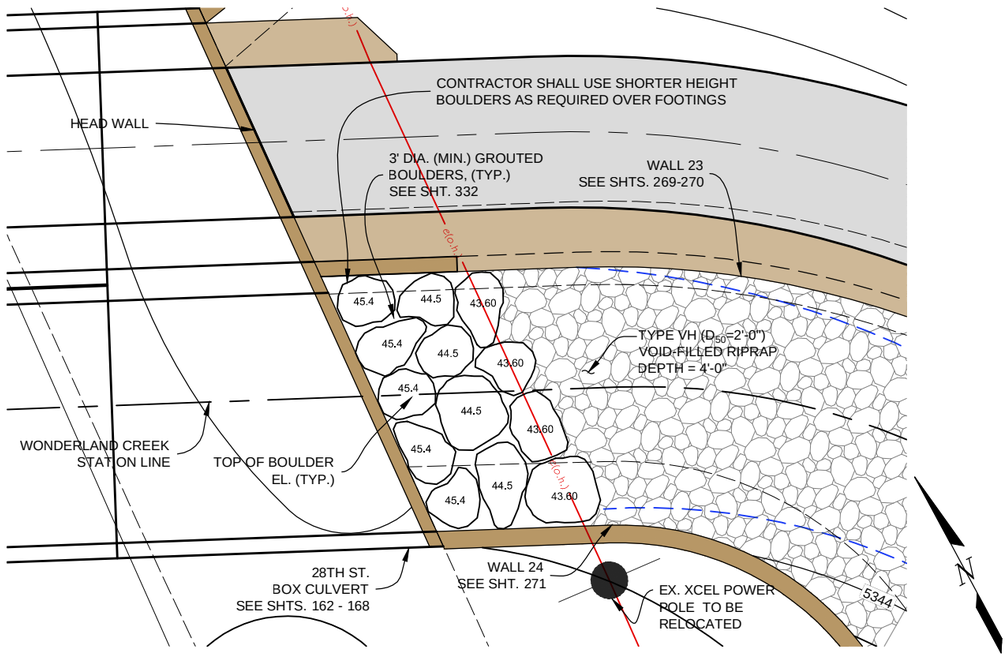

STRUCTURE #14 PLAN

0' 2.5' 5' 10'

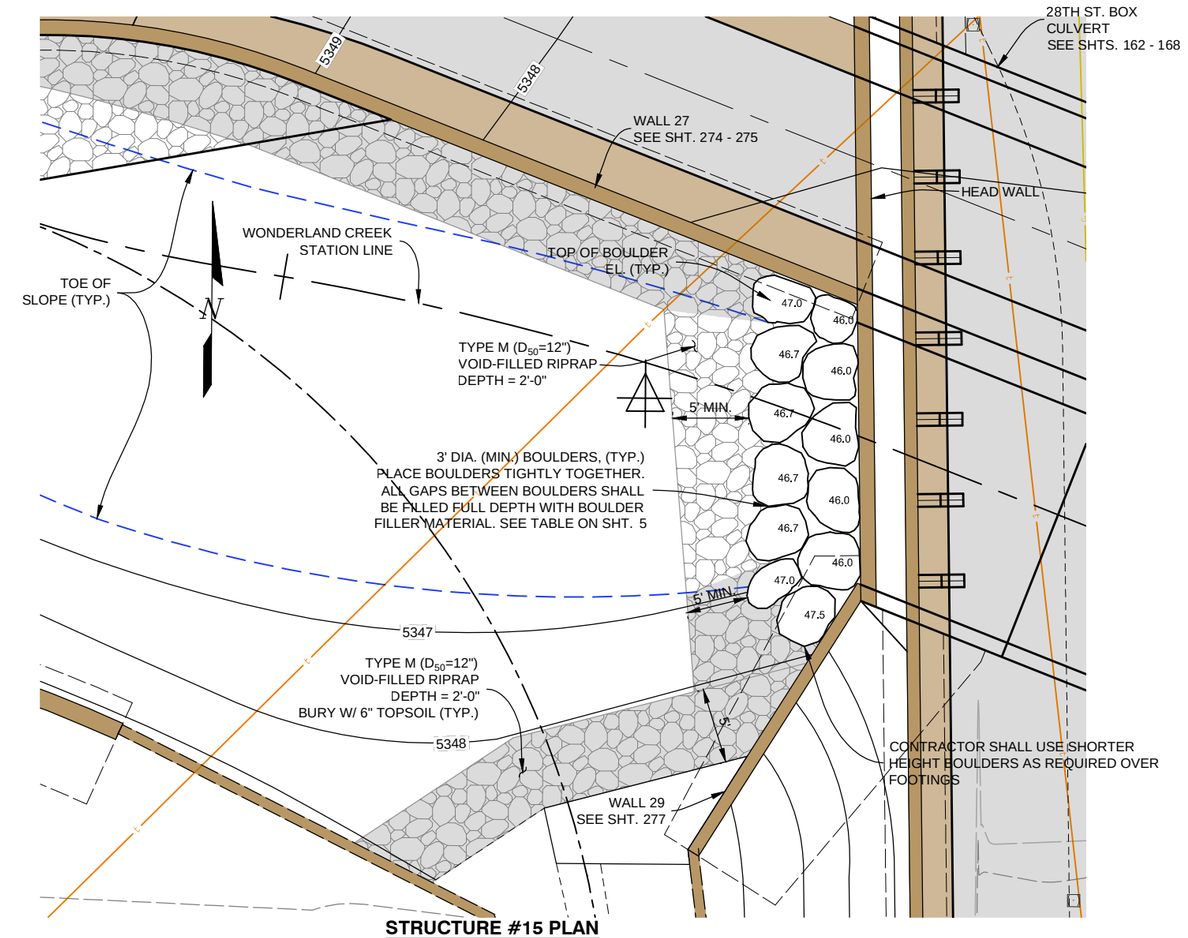

STRUCTURE #15 PLAN

0' 2.5' 5' 10'

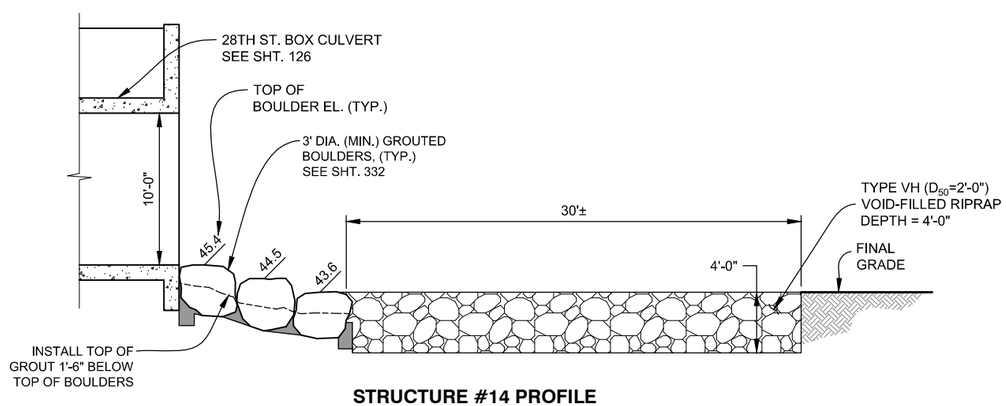

STRUCTURE #14 PROFILE

0' 2.5' 5' 10'

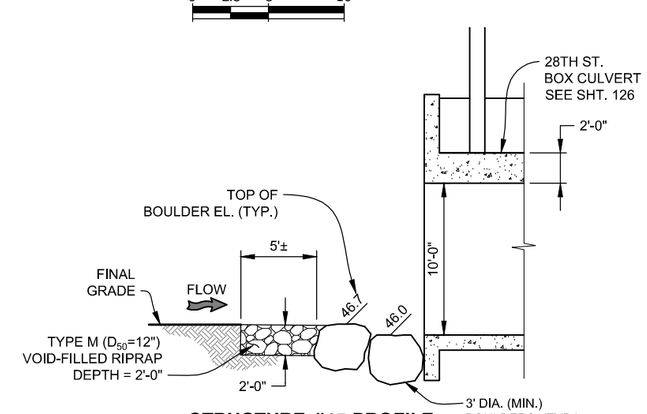

STRUCTURE #15 PROFILE

0' 2.5' 5' 10'

Computer File Information			
Creation Date: 06/10/14	Initials: JHK		
Last Modification Date: 06/18/15	Initials: JHK		
Full Path: P:\11-039.03\CAD			
Drawing File Name: 11-039.03_GRADE CONTROL PLAN.dwg			
AutoCAD 2014	Scale: AS SHOWN		

MULLER ENGINEERING CO., INC.
CONSULTING ENGINEERS
777 S. WADSWORTH BLVD. 4-100
LAKEWOOD, COLORADO 80226
(303) 988-4939
MULLER
MEC PROJECT NO. 11039.03

COLORADO REGISTERED PROFESSIONAL ENGINEER CHRISTOPHER L. KRIEGER 37254 6/18/15

Sheet Revisions		
Date:	Comments	Init.

As Constructed
No Revisions:
Revised:
Void:

URBAN DRAINAGE AND FLOOD CONTROL DISTRICT
CO CDOT Region 4 RDM
CITY OF BOULDER

WONDERLAND CREEK - GREENWAYS IMPROVEMENT PROJECT
GRADE CONTROL STRUCTURES
#14 & #15 DETAILS

Designer:	JW3	Structure Numbers	
Detailer:	JHK		
Sheet Subset:	DRAINAGE	Subset Sheets:	GSC-9

Project No./Code
STM 110-081
18405
Sheet Number: 184

PLOTTED: 6/19/2015 11:05:23 AM
NAME: P:\11-039.03 WONDERLAND CREEK LOWER REACH -FINAL DESIGN\CAD\11-039.03_GRADE CONTROL PLAN.DWG

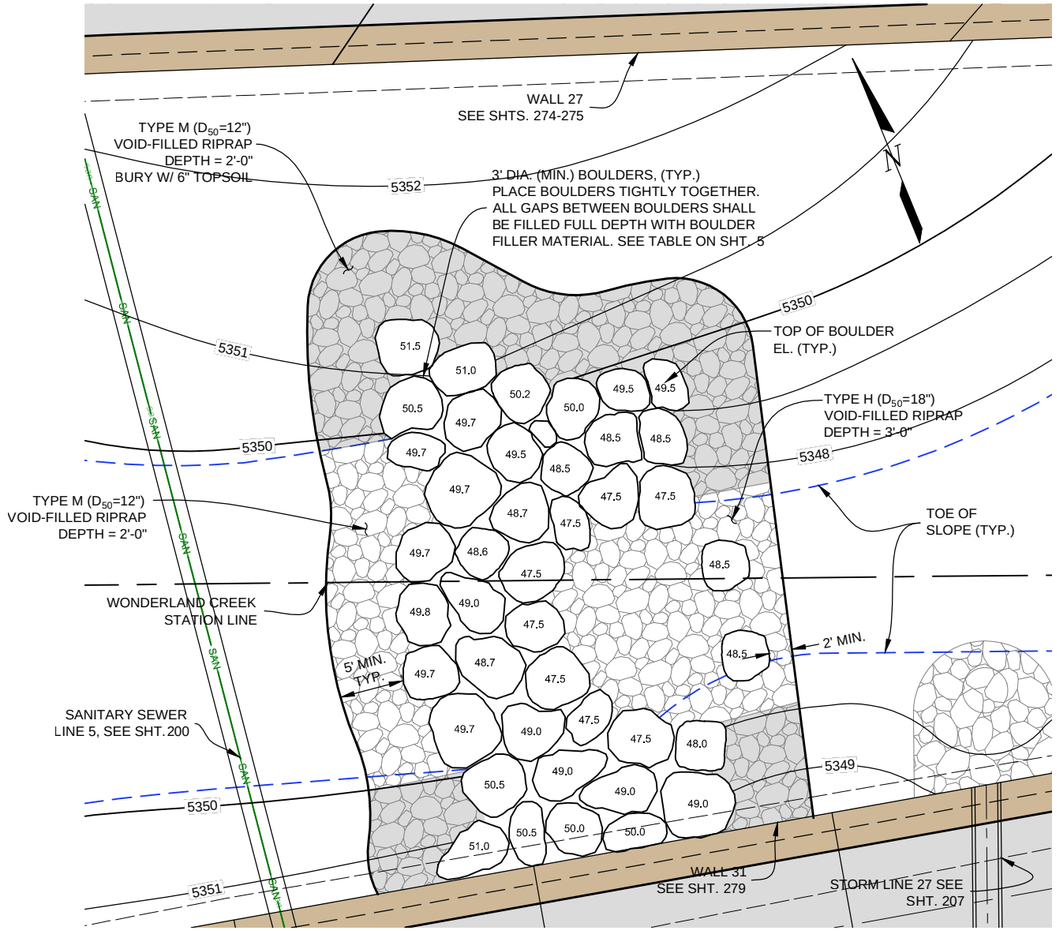

STRUCTURE #16 PLAN

0' 2.5' 5' 10'

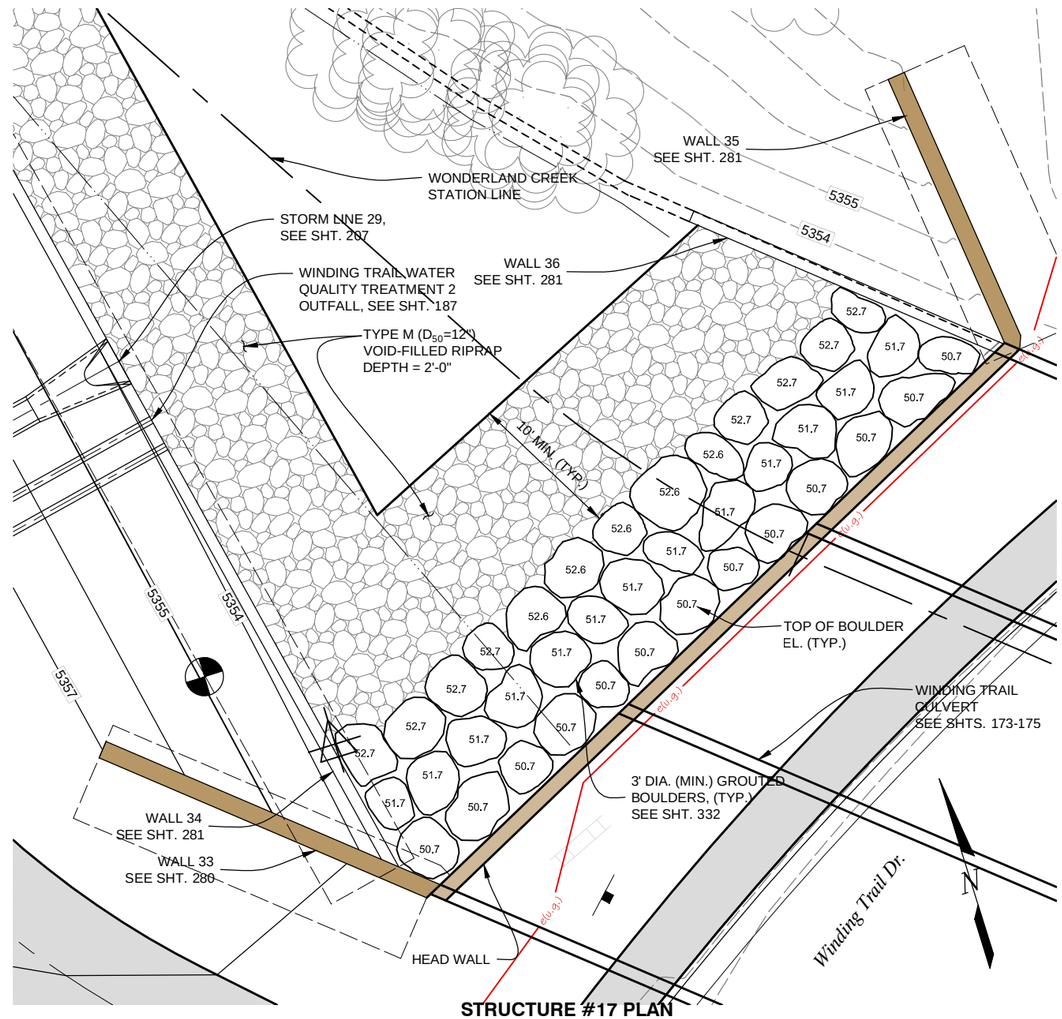

STRUCTURE #17 PLAN

0' 2.5' 5' 10'

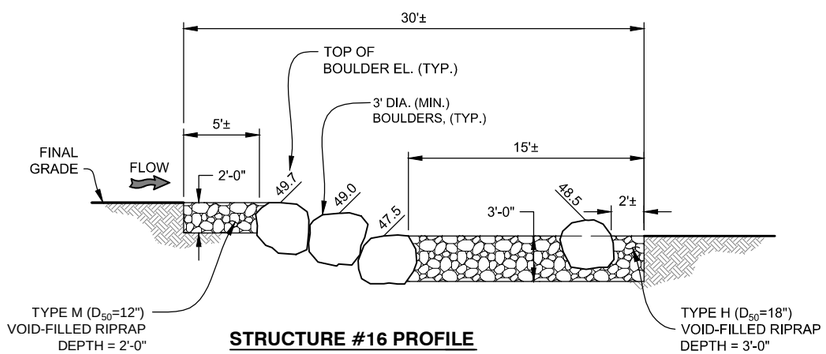

STRUCTURE #16 PROFILE

0' 2.5' 5' 10'

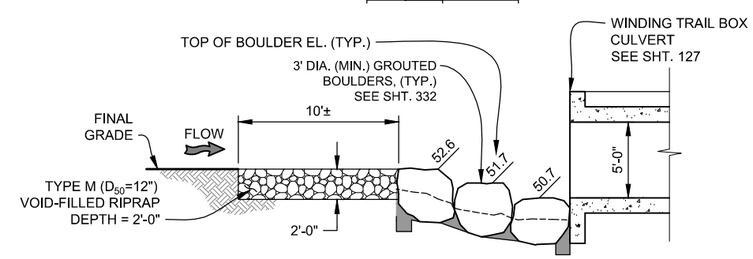

STRUCTURE #17 PROFILE

0' 2.5' 5' 10'

Computer File Information		
Creation Date: 06/10/14		Initials: JHK
Last Modification Date: 06/18/15		Initials: JHK
Full Path: P:\11-039.03\CAD		
Drawing File Name: 11-039.03_GRADE CONTROL PLAN.dwg		
AutoCAD 2014	Scale: AS SHOWN	

MULLER ENGINEERING CO., INC.
CONSULTING ENGINEERS
777 S. WADSWORTH BLVD. 4-100
LAKEWOOD, COLORADO 80226
(303) 988-4939
MULLER
MEC PROJECT NO. 11039.03

COLORADO REGISTERED PROFESSIONAL ENGINEER CHRISTOPHER L. KRIEBER 37254 6/18/15

Sheet Revisions		
Date:	Comments	Init.

As Constructed
No Revisions:
Revised:
Void:

Region 4 RDM
CITY OF BOULDER

WONDERLAND CREEK - GREENWAYS IMPROVEMENT PROJECT
GRADE CONTROL STRUCTURES
#16 & #17 DETAILS

Designer:	JW3	Structure Numbers	
Detailer:	JHK		
Sheet Subset:	DRAINAGE	Subset Sheets:	GSC-10

Project No./Code
STM 110-081
18405
Sheet Number: 185

PLOTTED: 6/19/2015 11:05:47 AM
NAME: P:\11-039.03 WONDERLAND CREEK LOWER REACH -FINAL DESIGN\CAD\11-039.03_GRADE CONTROL PLAN.DWG

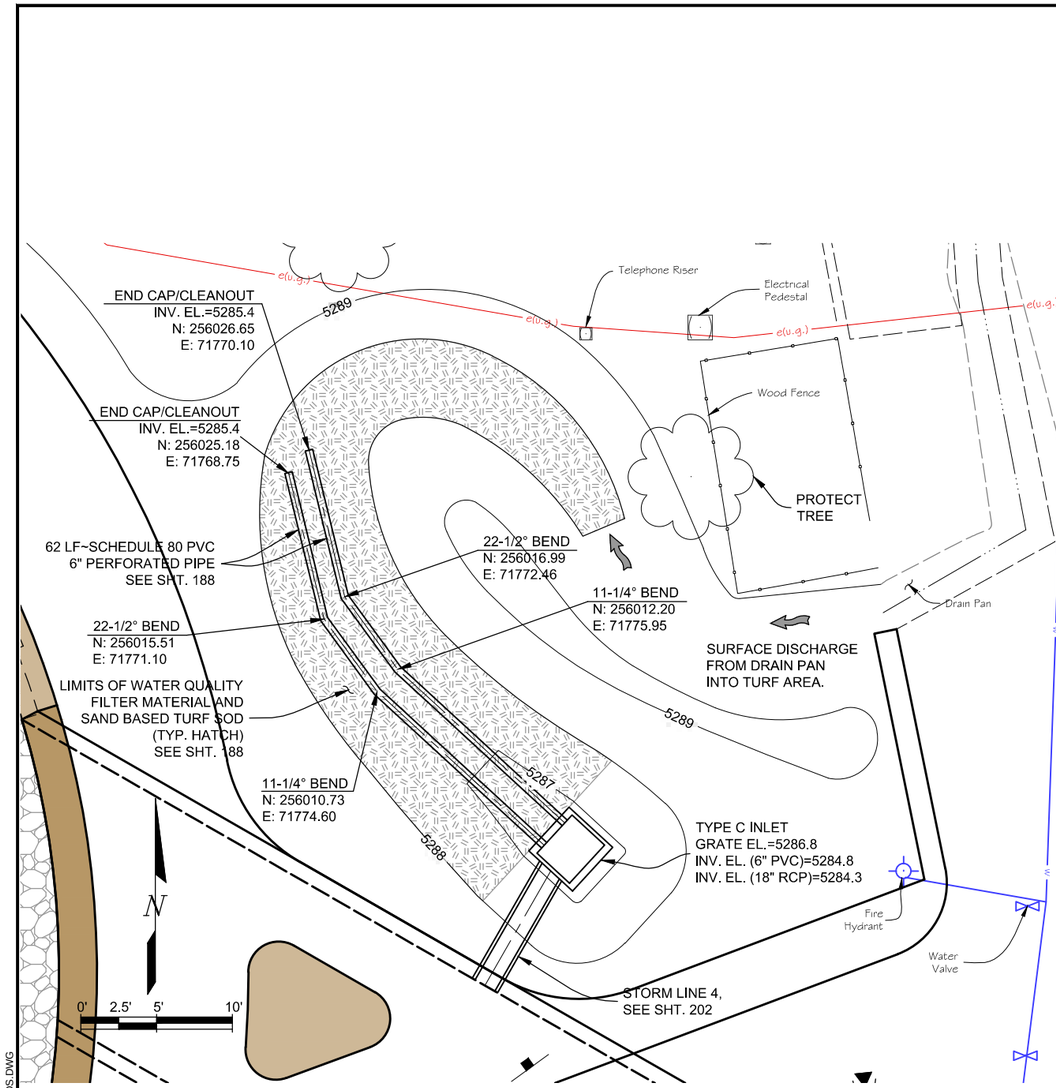

SPRING CREEK TREATMENT PLAN

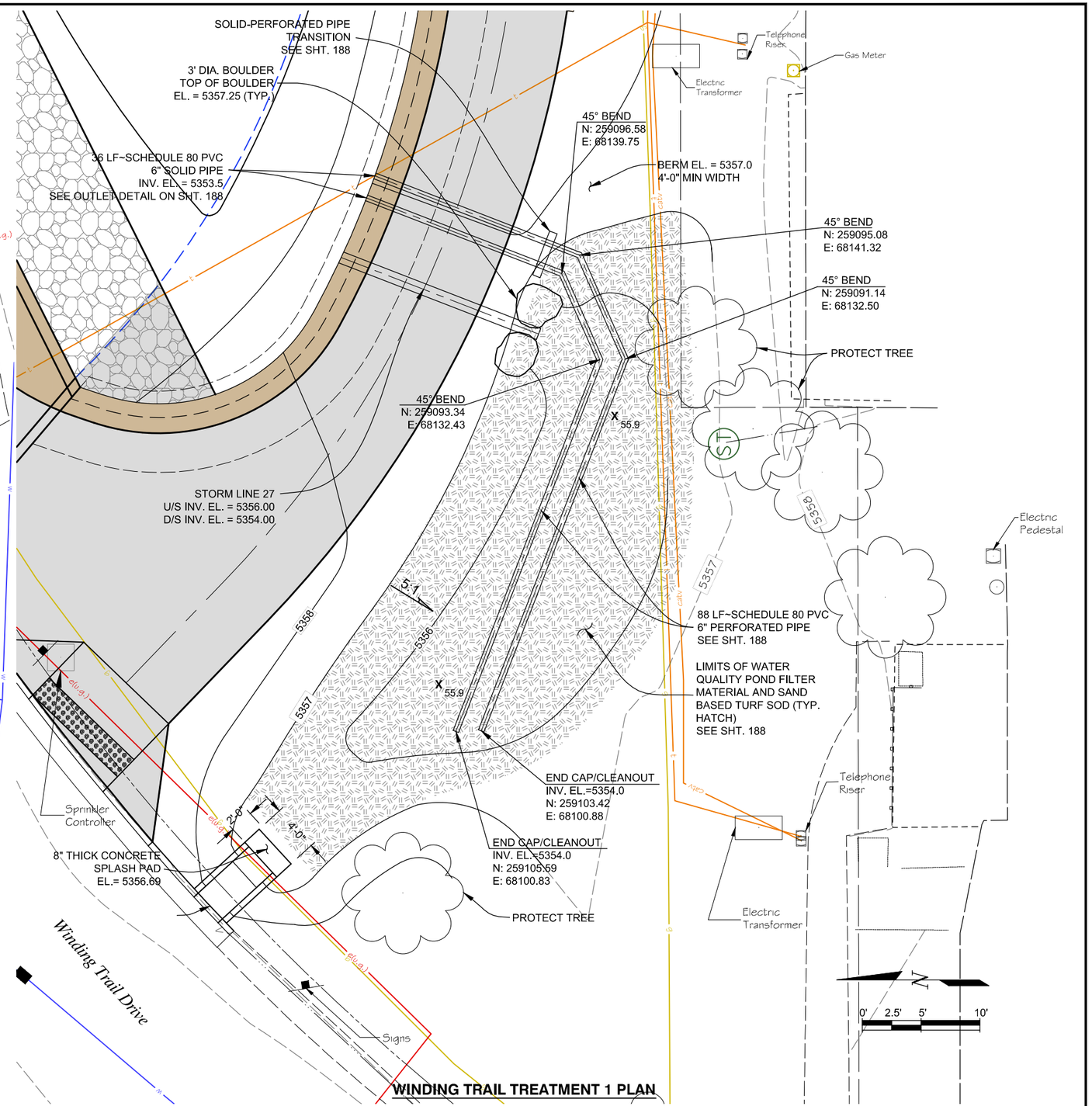

WINDING TRAIL TREATMENT 1 PLAN

Computer File Information		
Creation Date: 02/03/15	Initials: JHK	
Last Modification Date: 06/18/15	Initials: JHK	
Full Path: P:\11-039.03\CAD		
Drawing File Name: 11-039.03_WQ PONDS.dwg		
AutoCAD 2010	Scale: AS SHOWN	

MULLER ENGINEERING CO., INC.
CONSULTING ENGINEERS
777 S. WADSWORTH BLVD. 4-100
LAKEWOOD, COLORADO 80226
(303) 988-4939
MULLER
MEC PROJECT NO. 11039.03

COLORADO REGISTERED CHRISTOPHER L. KRIEGER 37254 PROFESSIONAL ENGINEER 6/18/15

Sheet Revisions		
Date:	Comments	Init.

As Constructed
No Revisions:
Revised:
Void:

Region 4 RDM
CITY OF BOULDER

WONDERLAND CREEK - GREENWAYS IMPROVEMENT PROJECT
WATER QUALITY TREATMENT PLAN

Designer:	CLK	Structure Numbers	
Detailer:	JHK		
Sheet Subset:	DRAINAGE	Subset Sheets:	WQ-1

Project No./Code
STM 110-081
18405
Sheet Number: 186

PLOTTED: 2/9/2015 2:44:44 PM
NAME: P:\11-039.03 WONDERLAND CREEK LOWER REACH - FINAL DESIGN\CAD\11-039.03_WQ PONDS.DWG

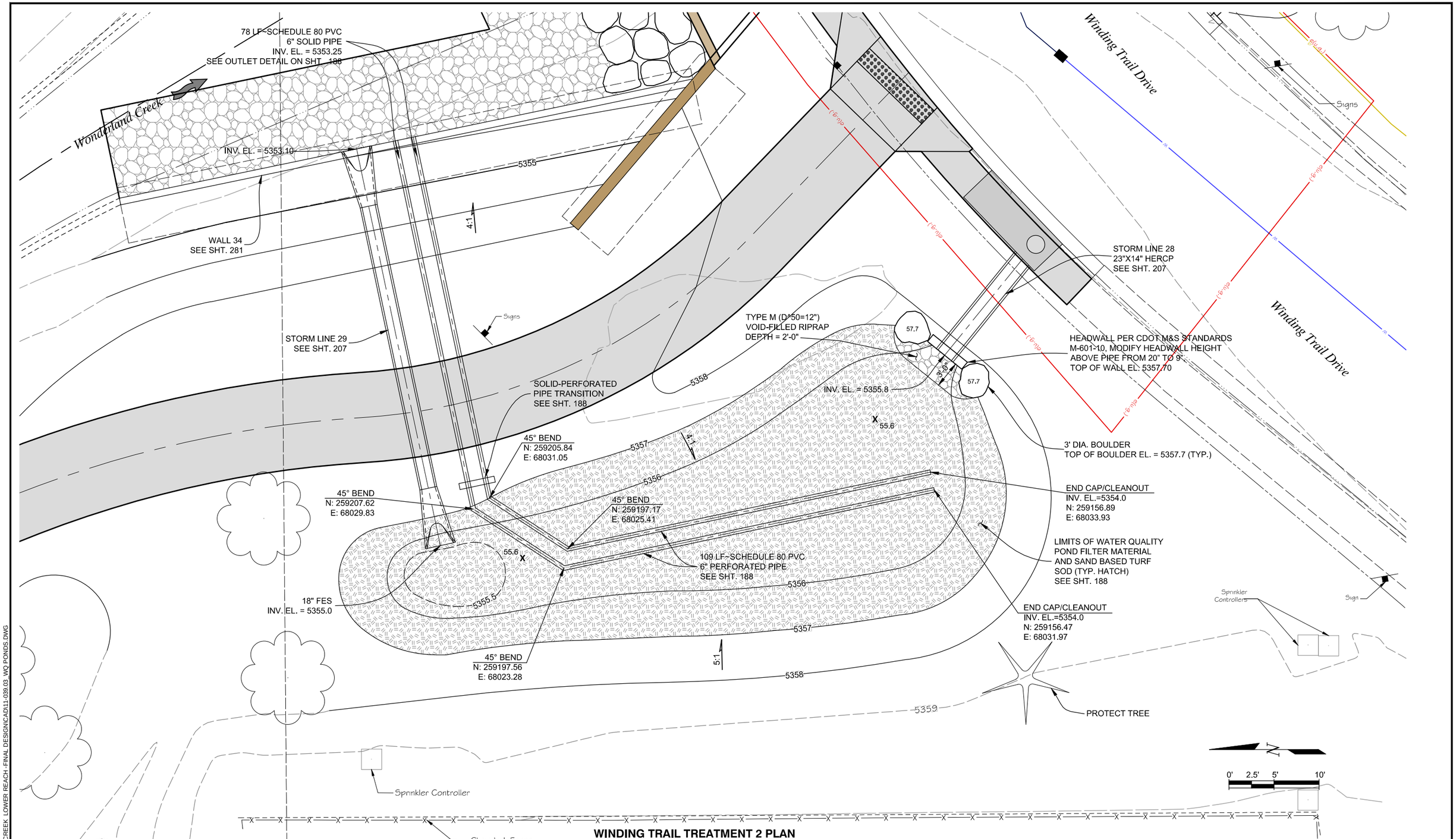

WINDING TRAIL TREATMENT 2 PLAN

Computer File Information			
Creation Date: 02/03/15	Initials: JHK		
Last Modification Date: 06/18/15	Initials: JHK		
Full Path: P:\11-039.03\CAD			
Drawing File Name: 11-039.03_WQ PONDS.dwg			
AutoCAD 2010	Scale: AS SHOWN		

MULLER ENGINEERING CO., INC.
CONSULTING ENGINEERS
777 S. WADSWORTH BLVD. 4-100
LAKEWOOD, COLORADO 80226
(303) 988-4939
MULLER
MEC PROJECT NO. 11039.03

COLORADO REGISTERED PROFESSIONAL ENGINEER CHRISTOPHER L. KRIEGER 37254 6/18/15

Sheet Revisions		
Date:	Comments	Init.

As Constructed
No Revisions:
Revised:
Void:

Region 4 RDM
CITY OF BOULDER

WONDERLAND CREEK - GREENWAYS IMPROVEMENT PROJECT
WATER QUALITY TREATMENT PLAN

Designer:	CLK	Structure Numbers	
Detailer:	JHK		
Sheet Subset: DRAINAGE		Subset Sheets:	WQ-2

Project No./Code
STM 110-081
18405
Sheet Number: 187

PLOTTED: 2/3/2015 2:44:44 PM
NAME: P:\11-039.03 WONDERLAND CREEK LOWER REACH - FINAL DESIGN\CAD\11-039.03_WQ PONDS.DWG

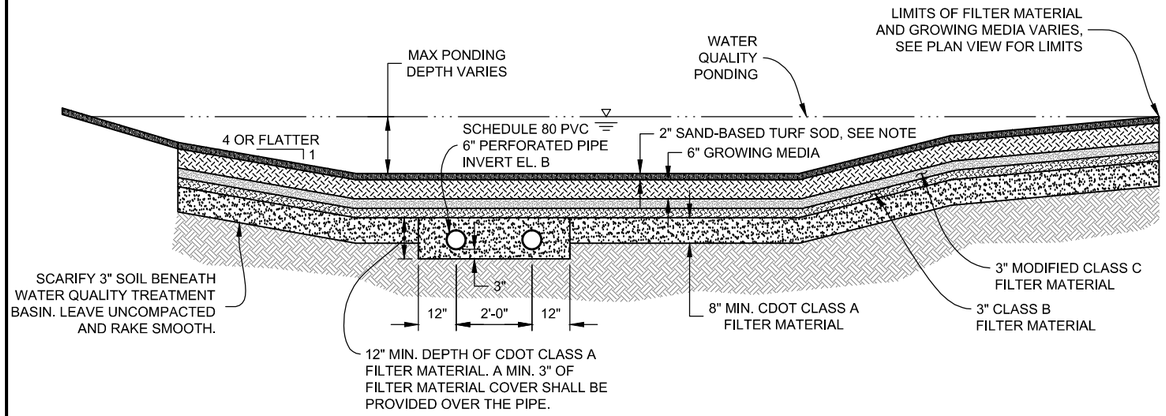

TREATMENT AREA TYPICAL SECTION

0' 1' 2' 4'
SCALE: 1/4" = 1'-0"

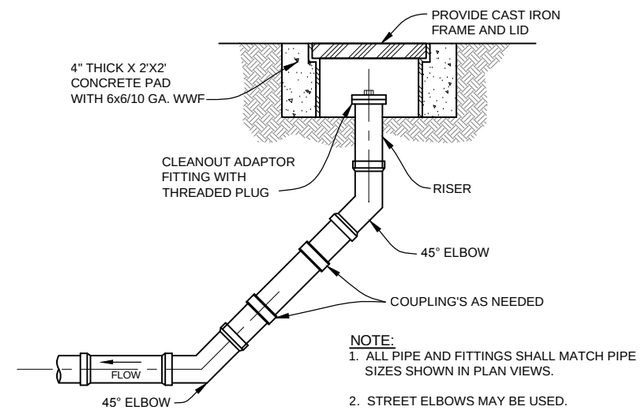

NOTE:
1. ALL PIPE AND FITTINGS SHALL MATCH PIPE SIZES SHOWN IN PLAN VIEWS.
2. STREET ELBOWS MAY BE USED.

UNDERDRAIN CLEANOUT DETAIL

N.T.S.

INFILTRATION MEDIA MATERIAL SPECIFICATIONS

1. CDOT CLASS C FILTER MATERIAL, SHALL HAVE A MODIFIED GRADATION PER THE TABLE SHOWN BELOW. CONTRACTOR SHALL COORDINATE WITH SUPPLIER TO OBTAIN GRADATION ANALYSIS WITH THE SIEVE SIZES LISTED.
2. GROWING MEDIA SHALL CONSIST OF 90:10 MIX (BY VOLUME) OF ATHLETIC GRADE SAND (SCREENED TO 2 MM MINUS) AND FINE SHREDDED CEDAR MULCH MIXED 70:30 (BY VOLUME) WITH SCREENED TOPSOIL. FINAL MIX PROPORTIONS BY VOLUME SHALL BE 63% SAND, 7% MULCH, AND 30% SANDY LOAM TOPSOIL. GROWING MEDIA SHALL BE SUPPLIED BY GOLF AND SPORT SOLUTIONS, LASALLE COLORADO (CONTACT: ERIC POLLOCK, 303-961-0092) OR APPROVED EQUIVALENT.
3. SAND-BASED TURF SOD SHALL BE GTF BLUEGRASS. SOD GROWN IN SAND BASED SOIL, AS SUPPLIED BY GRAFF'S TURF FARMS, FORT MORGAN, COLORADO, OR APPROVED EQUIVALENT.
4. CARE SHALL BE TAKEN TO AVOID MIXING OF THE 3 FILTER LAYERS AND GROWING MEDIA. CONTRACTOR SHALL PLATE COMPACT EACH LAYER.
5. CONTRACTOR SHALL AVOID DRIVING HEAVY EQUIPMENT OVER THE PIPE DURING CONSTRUCTION.

MODIFIED CDOT CLASS C FILTER MATERIAL

U.S. STANDARD SIEVE SIZE	% BY WEIGHT PASSING
3/4 INCH	100
3/8 INCH	80-100
NO. 4	60-100
NO. 8	50-90
NO. 16	35-70
NO. 30	25-40
NO. 50	10-25
NO. 100	2-10
NO. 200	0-3

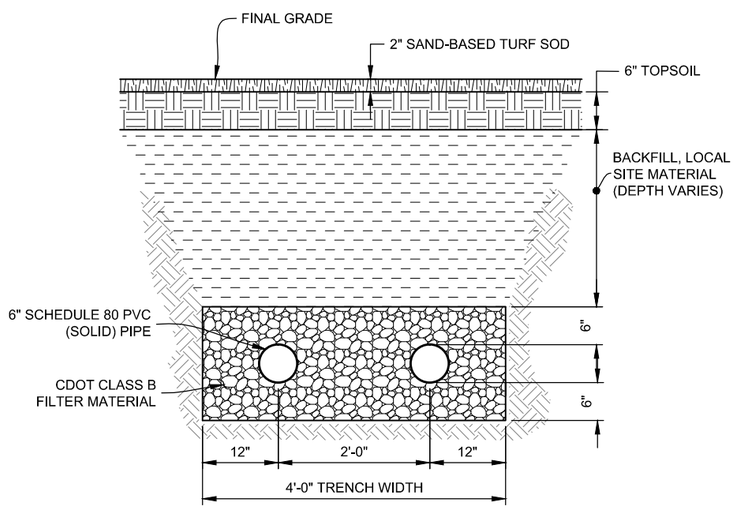

6" (SOLID) PIPE TRENCH DETAIL

0' 6" 1' 2'
SCALE: 1/2" = 1'-0"

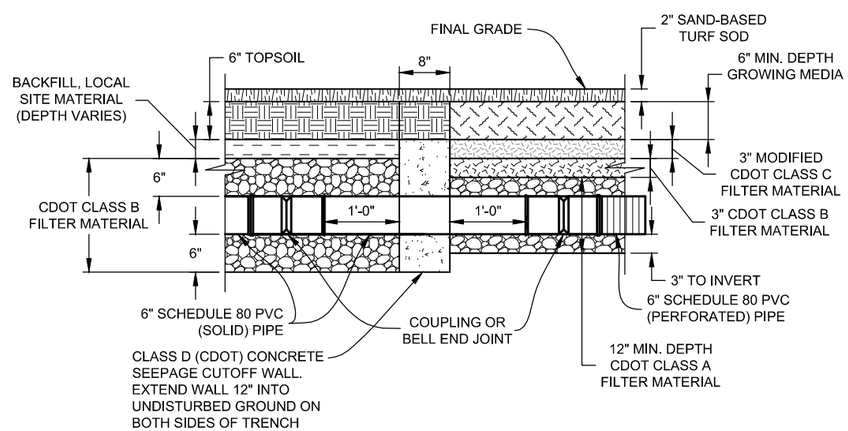

SOLID - PERFORATED PIPE TRANSITION DETAIL

0' 6" 1' 2'
SCALE: 1/2" = 1'-0"

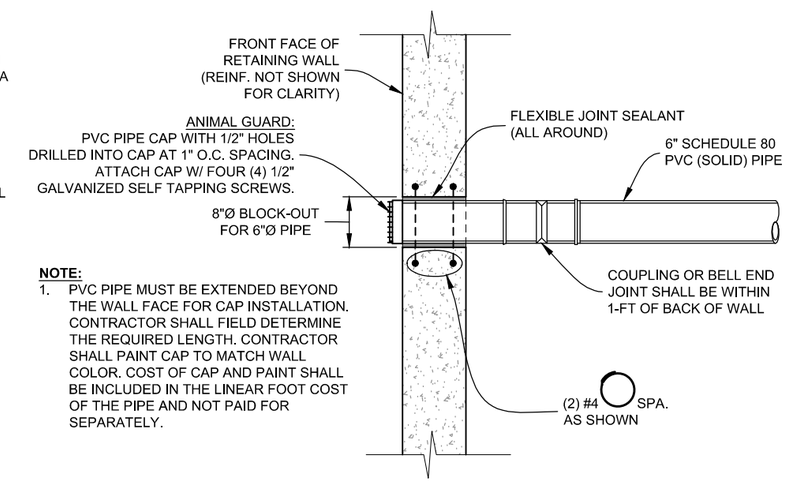

ANIMAL GUARD:
PVC PIPE CAP WITH 1/2" HOLES DRILLED INTO CAP AT 1" O.C. SPACING. ATTACH CAP W/ FOUR (4) 1/2" GALVANIZED SELF TAPPING SCREWS.

NOTE:
1. PVC PIPE MUST BE EXTENDED BEYOND THE WALL FACE FOR CAP INSTALLATION. CONTRACTOR SHALL FIELD DETERMINE THE REQUIRED LENGTH. CONTRACTOR SHALL PAINT CAP TO MATCH WALL COLOR. COST OF CAP AND PAINT SHALL BE INCLUDED IN THE LINEAR FOOT COST OF THE PIPE AND NOT PAID FOR SEPARATELY.

UNDERDRAIN PIPE OUTLET DETAIL

0' 6" 1' 2'
SCALE: 1/2" = 1'-0"

NOTES:

1. ALL SOLID AND PERFORATED PIPE SHALL BE 6" SCHEDULE 80 PVC.
2. ALL PIPE SHALL BE LAID WITH 0% SLOPE.

Computer File Information		
Creation Date: 02/03/15	Initials: JHK	
Last Modification Date: 06/18/15	Initials: JHK	
Full Path: P:\11-039.03\CAD		
Drawing File Name: 11-039.03_WQ PONDS.dwg		
AutoCAD 2010	Scale: AS SHOWN	

MULLER ENGINEERING CO., INC.
CONSULTING ENGINEERS
777 S. WADSWORTH BLVD. 4-100
LAKEWOOD, COLORADO 80226
(303) 988-4939
MULLER
MEC PROJECT NO. 11039.03

COLORADO REGISTERED CHRISTOPHER L. KRIEGER 37254 6/18/15 PROFESSIONAL ENGINEER

Sheet Revisions		
Date:	Comments	Init.

As Constructed
No Revisions:
Revised:
Void:

Region 4 RDM

CITY OF BOULDER

WONDERLAND CREEK - GREENWAYS IMPROVEMENT PROJECT

WATER QUALITY TREATMENT DETAILS

Designer:	CLK	Structure Numbers	
Detailer:	JHK		
Sheet Subset:	DRAINAGE	Subset Sheets:	WQ-3

Project No./Code
STM 110-081
18405
Sheet Number: 188

PLOTTED: 2/9/2015 2:44:44 PM
NAME: P:\11-039.03 WONDERLAND CREEK LOWER REACH - FINAL DESIGN\CAD\11-039.03_WQ PONDS.DWG

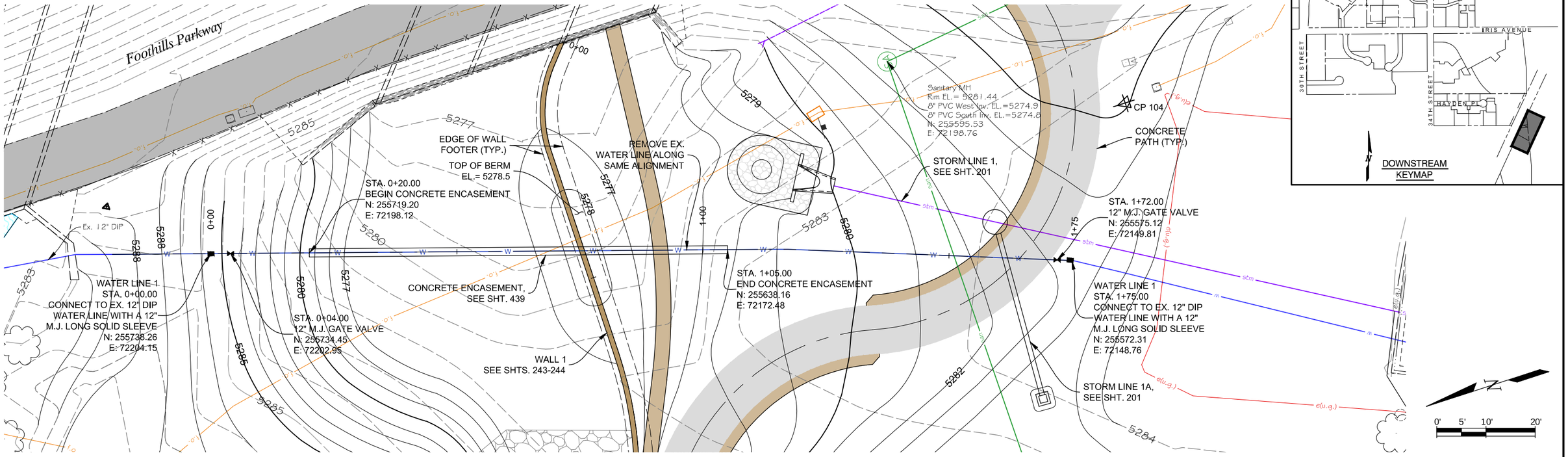

WATER LINE 1 PLAN

NOTES:

1. NO POTHOLE INFORMATION WAS OBTAINED IN THE AREA OF WATER LINE 1. CONTRACTOR SHALL POTHOLE WATER LINE PRIOR TO CONSTRUCTION. POTHOLE SHALL BE COMPLETED PRIOR TO ORDERING STORM SEWER 1 MANHOLE.
2. ALL BENDS AND FITTINGS SHALL BE RESTRAINED IN ACCORDANCE WITH THE CITY OF BOULDER STANDARDS AND DETAILS.
3. ABBREVIATIONS:
   - -DIP = DUCTILE IRON PIPE
   - -M.J. = MECHANICAL JOINT
   - -T.O.P. = TOP OF PIPE
   - -EL. = ELEVATION
4. ALL PROPOSED PIPE SHALL BE PVC CLASS C900.

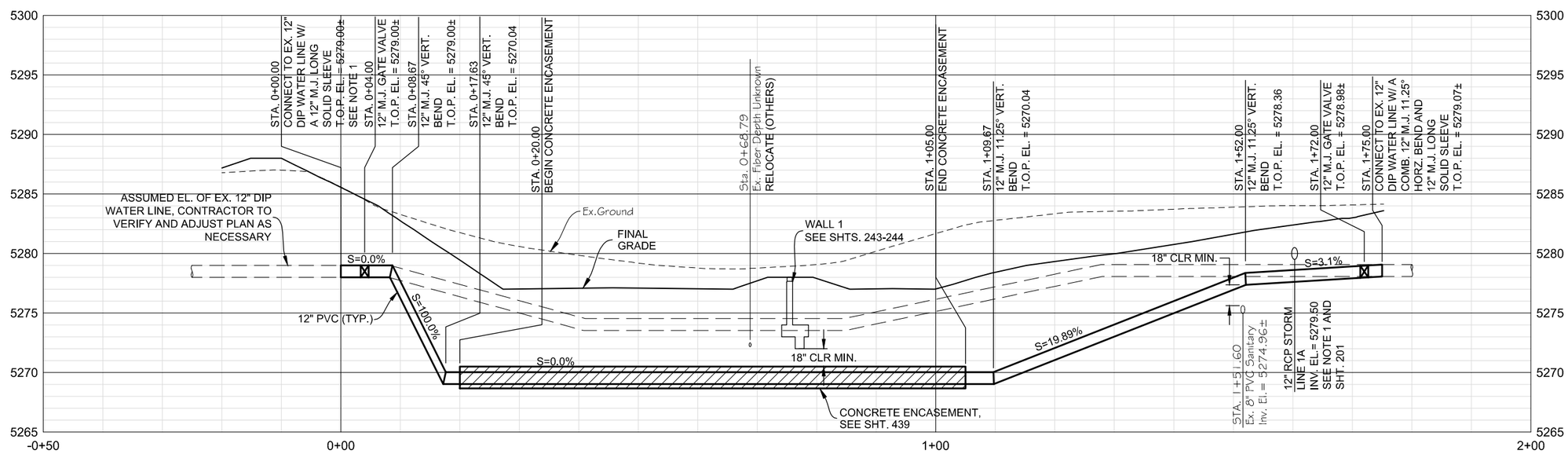

WATER LINE 1 PROFILE

SCALE: HORIZ. 1"=20'
VERT. 1"=10'

Computer File Information			
Creation Date: 10/06/14		Initials: JHK	
Last Modification Date: 06/18/15		Initials: JHK	
Full Path: P:\11-039.03\WONDERLAND\CAD			
Drawing File Name: 11-039.03_UTIL-WATER P&P.dwg			
AutoCAD 2010	Scale: AS SHOWN		

MULLER ENGINEERING CO., INC.
CONSULTING ENGINEERS
777 S. WADSWORTH BLVD. 4-100
LAKEWOOD, COLORADO 80226
(303) 988-4939
MULLER
MEC PROJECT NO. 11039.03

COLORADO REGISTERED CHRISTOPHER L. KREGER 37254 6/18/15 PROFESSIONAL ENGINEER

Sheet Revisions		
Date:	Comments	Init.

As Constructed
No Revisions:
Revised:
Void:

URBAN DRAINAGE AND FLOOD CONTROL DISTRICT
CO CDOT Region 4 RDM
CITY OF BOULDER

WONDERLAND CREEK - GREENWAYS IMPROVEMENT PROJECT
WATER LINE 1 PLAN & PROFILE

Designer:	JW3	Structure Numbers	
Detailer:	JHK		
Sheet Subset:	UTILITY	Subset Sheets:	WL-1

Project No./Code
STM 110-081
18405
Sheet Number: 189

PLOTTED: 10/6/2014 1:26:26 PM
NAME: P:\11-039.03 WONDERLAND CREEK LOWER REACH -FINAL DESIGN\CAD\11-039.03_UTIL-WATER P&P.DWG

NOTES:

1. CONTRACTOR SHALL VERIFY LOCATIONS OF ALL UTILITIES AT TIE-IN LOCATIONS PRIOR TO CONSTRUCTION. THESE LOCATIONS SHALL BE REVIEWED WITH ENGINEER PRIOR TO CONSTRUCTION.
2. ALL BENDS AND FITTINGS SHALL BE RESTRAINED IN ACCORDANCE WITH THE CITY OF BOULDER NOTES AND DETAILS.
3. ABBREVIATIONS:
   - -DIP = DUCTILE IRON PIPE
   - -M.J. = MECHANICAL JOINT
   - -T.O.P. = TOP OF PIPE
   - -EL. = ELEVATION
4. ALL PROPOSED PIPE SHALL BE PVC CLASS C900.
5. THE 8" M.J. 22.5° BENDS AT STA. 0+11.69 AND STA. 1+26.38 CAN BE OMITTED FROM WATERLINE CONSTRUCTION. THE 45° BENDS ADJACENT TO THESE BENDS CAN BE ROTATED AS NEEDED TO ACHIEVE THE DESIRED BEND AND ALIGNMENT. CONTRACTOR SHALL PROVIDE DETAILS TO AND RECEIVE APPROVAL FROM ENGINEER PRIOR TO CONSTRUCTION.

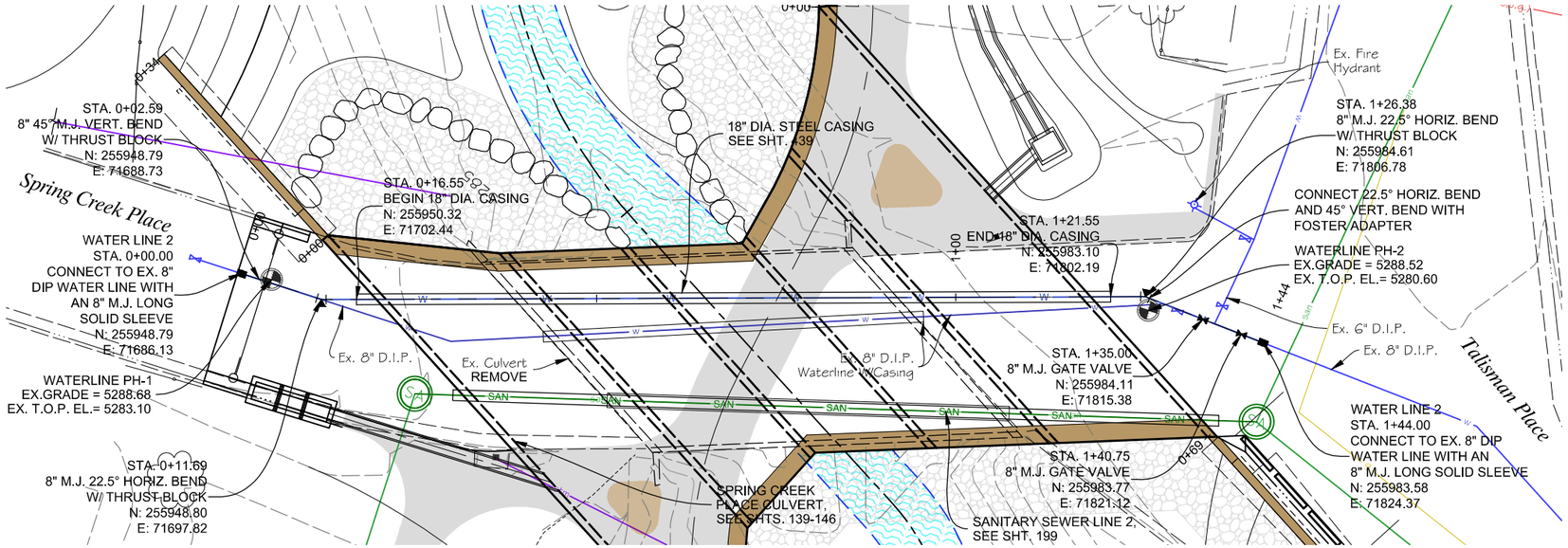

WATER LINE 2 PLAN

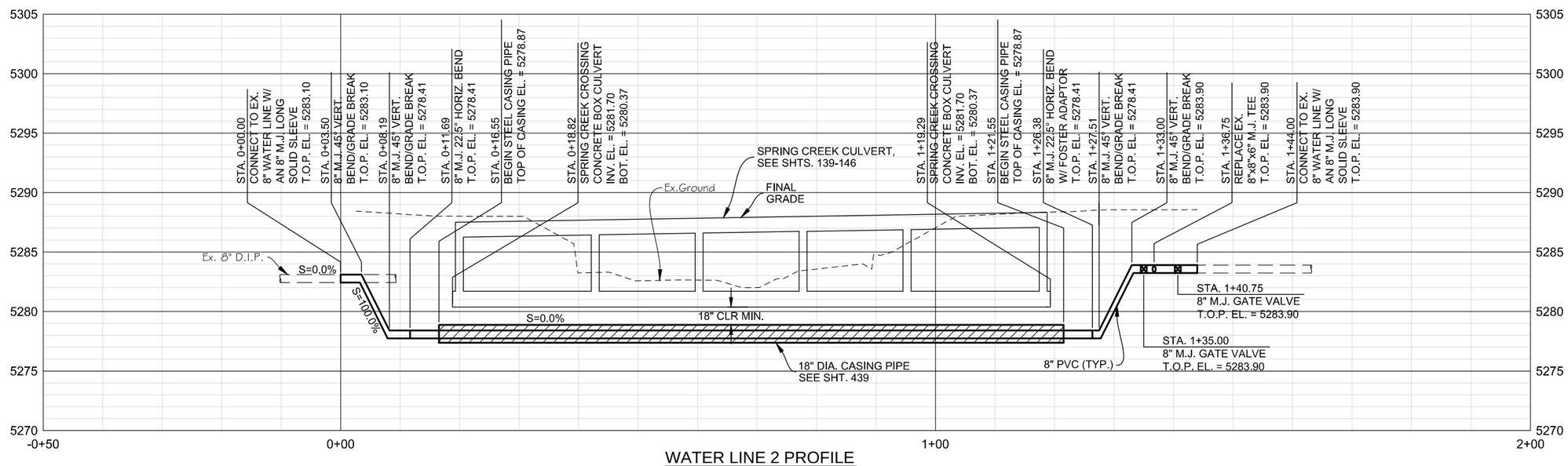

WATER LINE 2 PROFILE

SCALE: HORIZ. 1"=20'
VERT. 1"=10'

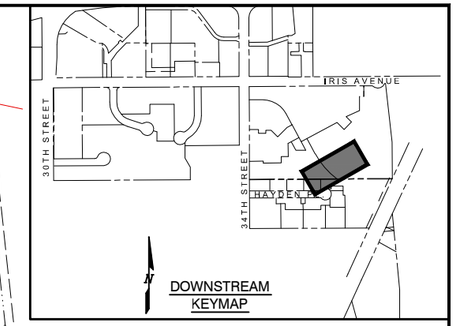

Computer File Information		
Creation Date: 10/06/14	Initials: JHK	
Last Modification Date: 06/18/15	Initials: JHK	
Full Path: P:\11-039.03\WONDERLAND\CAD		
Drawing File Name: 11-039.03_UTIL-WATER P&P.dwg		
AutoCAD 2010	Scale: AS SHOWN	

MULLER ENGINEERING CO., INC.
CONSULTING ENGINEERS
777 S. WADSWORTH BLVD. 4-100
LAKEWOOD, COLORADO 80226
(303) 988-4939

MEC PROJECT NO. 11039.03

COLORADO REGISTERED PROFESSIONAL ENGINEER CHRISTOPHER L. KREGER 37254 6/18/15

Sheet Revisions		
Date:	Comments	Init.

As Constructed
No Revisions:
Revised:
Void:

Region 4 RDM

CITY OF BOULDER

WONDERLAND CREEK - GREENWAYS IMPROVEMENT PROJECT

WATER LINE 2 PLAN & PROFILE

Designer:	JW3	Structure Numbers	
Detailer:	JHK		
Sheet Subset:	UTILITY	Subset Sheets:	WL-2

Project No./Code
STM 110-081
18405
Sheet Number: 190

PLOTTED: 10/6/2014 1:26:26 PM
NAME: P:\11-039.03 WONDERLAND CREEK LOWER REACH -FINAL DESIGN\CAD\11-039.03_UTIL-WATER P&P.DWG

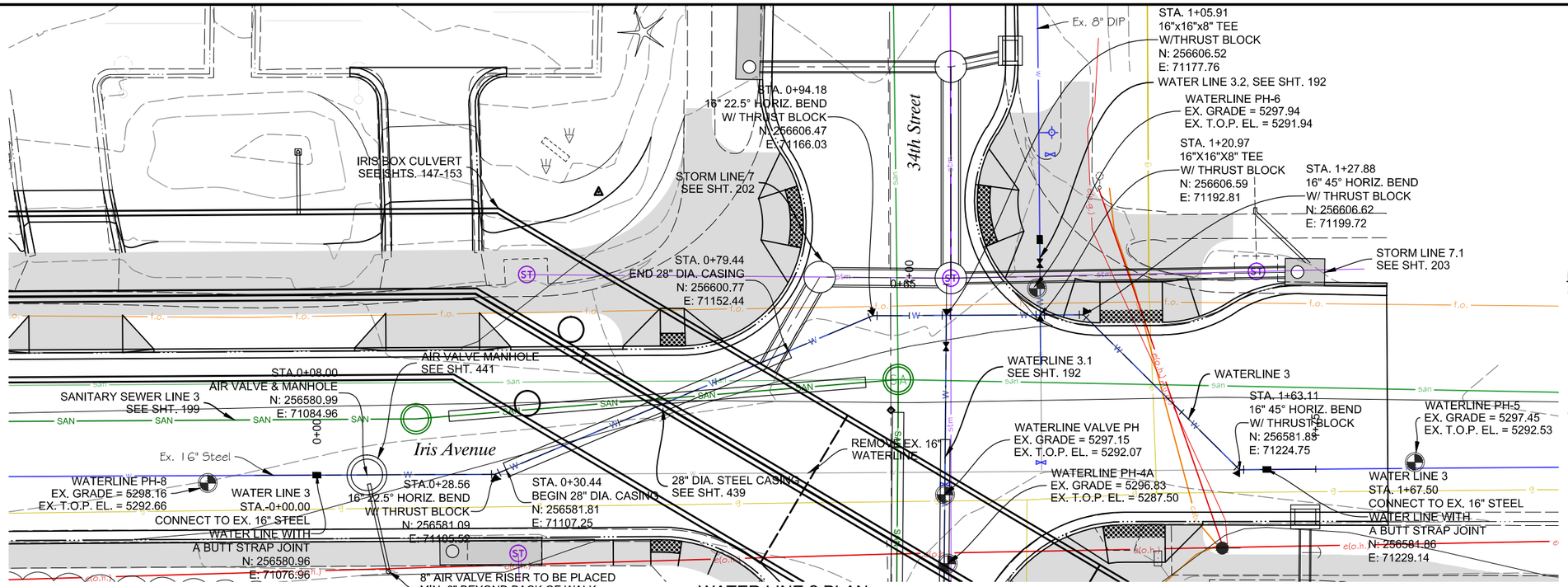

WATER LINE 3 PLAN

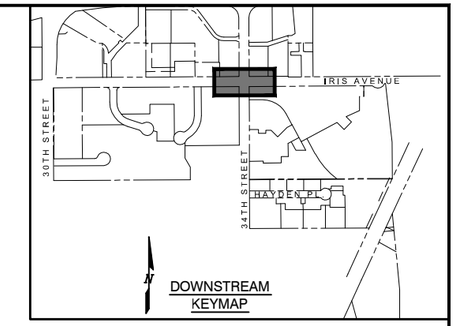

NOTES:

1. WORK ON THE IRIS AVENUE 16" STEEL WATER LINE MAY ONLY BE COMPLETED BETWEEN OCTOBER 15TH AND APRIL 15TH.
2. CONTRACTOR SHALL VERIFY LOCATIONS OF ALL UTILITIES AT TIE-IN LOCATIONS PRIOR TO CONSTRUCTION. THESE LOCATIONS SHALL BE REVIEWED WITH ENGINEER PRIOR TO CONSTRUCTION.
3. ALL BENDS AND FITTINGS SHALL BE RESTRAINED IN ACCORDANCE WITH THE CITY OF BOULDER NOTES AND DETAILS.
4. ABBREVIATIONS:
   -T.O.P. = TOP OF PIPE
   -EL. = ELEVATION
5. THE 45° VERTICAL BEND AT STA. 0+23.33 CAN BE OMITTED FROM THE WATERLINE CONSTRUCTION. THE 22.5° BEND AT STATION 0+30.44 CAN BE A 45° BEND ROLLED TO ACHIEVE DESIRED VERTICAL AND HORIZONTAL BENDS AND ALIGNMENT. CONTRACTOR SHALL PROVIDE DETAILS TO AND RECEIVE APPROVAL FROM ENGINEER PRIOR TO CONSTRUCTION.
6. EXISTING STEEL WATER LINE IS A CLASS "H" PIPE WITH A PIPE THICKNESS OF 0.219".
7. THE 8" LEG OF THE 16"x16"x8" TEE SHALL HAVE THE OUTER DIAMETER OF AN 8" CAST IRON PIPE.

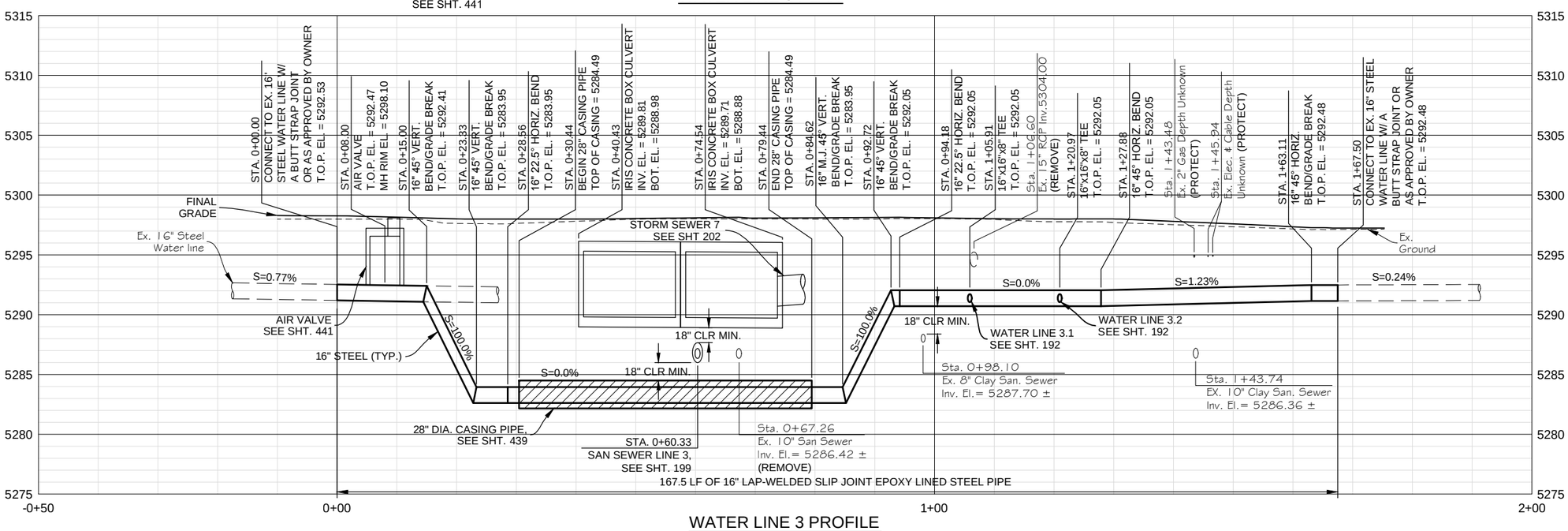

WATER LINE 3 PROFILE

SCALE: HORIZ. 1"=20'
VERT. 1"=10'

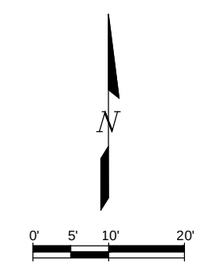

Computer File Information		
Creation Date: 10/06/14	Initials: JHK	
Last Modification Date: 06/18/15	Initials: JHK	
Full Path: P:\11-039.03\WONDERLAND\CAD		
Drawing File Name: 11-039.03_UTIL-WATER P&P.dwg		
AutoCAD 2010	Scale: AS SHOWN	

MULLER ENGINEERING CO., INC.
CONSULTING ENGINEERS
777 S. WADSWORTH BLVD. 4-100
LAKEWOOD, COLORADO 80226
(303) 988-4939
MULLER
MEC PROJECT NO. 11039.03

COLORADO REGISTERED PROFESSIONAL ENGINEER CHRISTOPHER L. KRAGER 37254 6/18/15

Sheet Revisions		
Date:	Comments	Init.

As Constructed
No Revisions:
Revised:
Void:

GREAT DENVER DRAINAGE AND FLOOD CONTROL DISTRICT
CO CDOT Region 4 RDM
CITY OF BOULDER

WONDERLAND CREEK - GREENWAYS IMPROVEMENT PROJECT
WATER LINE 3 PLAN & PROFILE

Designer:	JW3	Structure Numbers	
Detailer:	JHK		
Sheet Subset:	UTILITY	Subset Sheets:	WL-3

Project No./Code
STM 110-081
18405
Sheet Number: 191

PLOTTED: 10/6/2014 1:26:26 PM
NAME: P:\11-039.03 WONDERLAND CREEK LOWER REACH -FINAL DESIGN\CAD\11-039.03_UTIL-WATER P&P.DWG

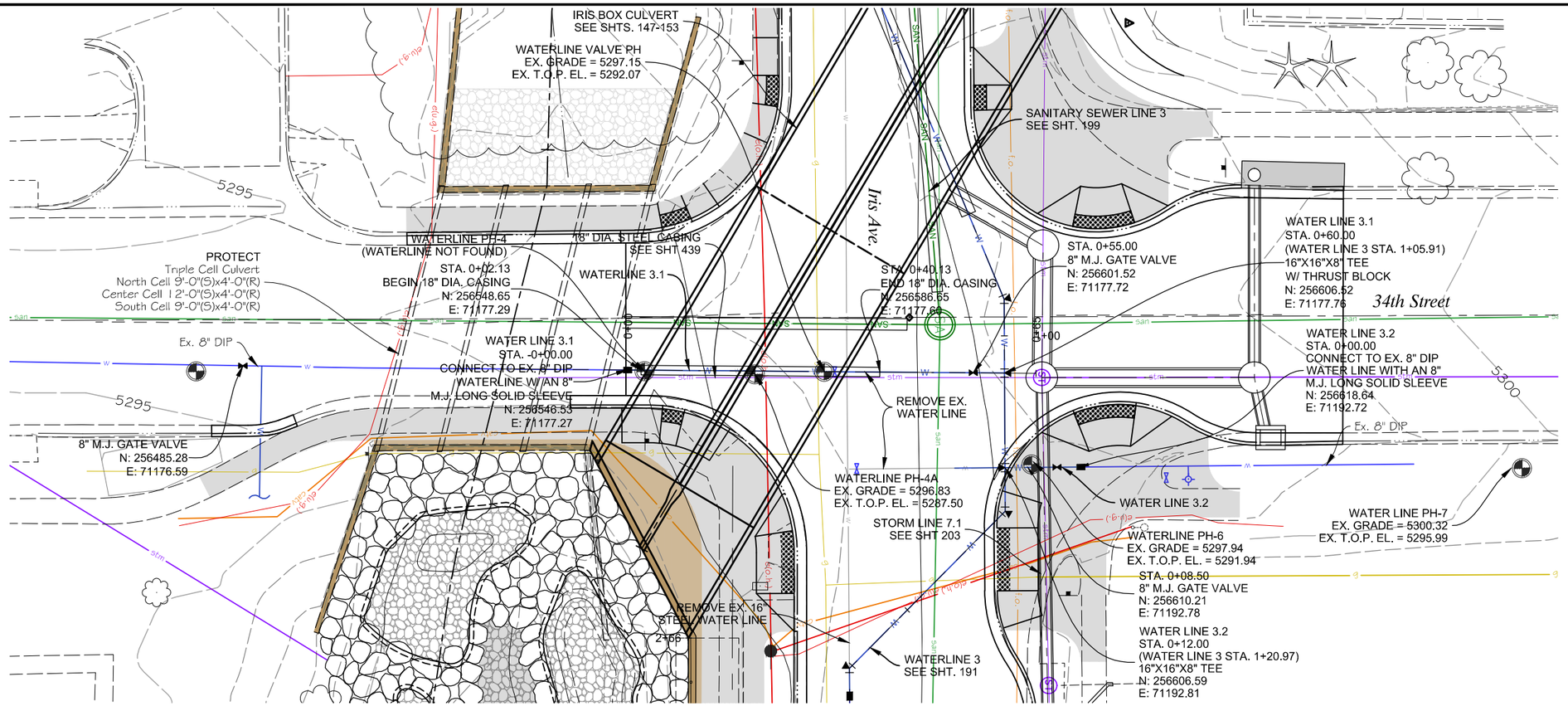

WATER LINES 3.1 & 3.2 PLAN

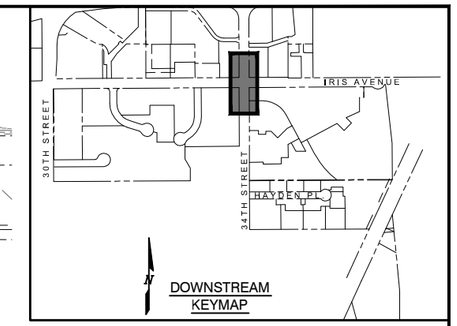

NOTES:

1. WORK ON THE IRIS AVENUE 16" STEEL WATER LINE MAY ONLY BE COMPLETED BETWEEN OCTOBER 15TH AND APRIL 15TH.
2. CONTRACTOR SHALL VERIFY LOCATIONS OF ALL UTILITIES AT TIE-IN LOCATIONS PRIOR TO CONSTRUCTION. THESE LOCATIONS SHALL BE REVIEWED WITH ENGINEER PRIOR TO CONSTRUCTION.
3. ALL BENDS AND FITTINGS SHALL BE RESTRAINED IN ACCORDANCE WITH THE CITY OF BOULDER NOTES AND DETAILS.
4. ABBREVIATIONS:
   -DIP = DUCTILE IRON PIPE
   -M.J. = MECHANICAL JOINT
   -T.O.P. = TOP OF PIPE
   -EL. = ELEVATION
5. ALL PROPOSED PIPE SHALL BE PVC CLASS C900.
6. THE 8" LEG OF THE 16"x16"x8" TEE SHALL HAVE THE OUTER DIAMETER OF AN 8" CAST IRON PIPE.

N
0' 5' 10' 20'

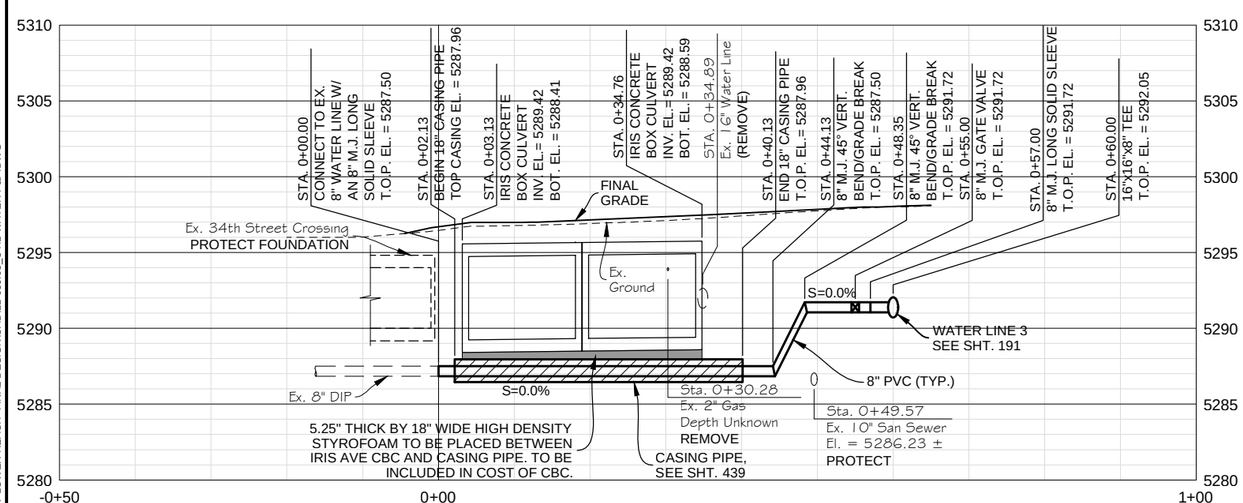

WATER LINE 3.1 PROFILE

SCALE: HORIZ. 1"=20'
VERT. 1"=10'

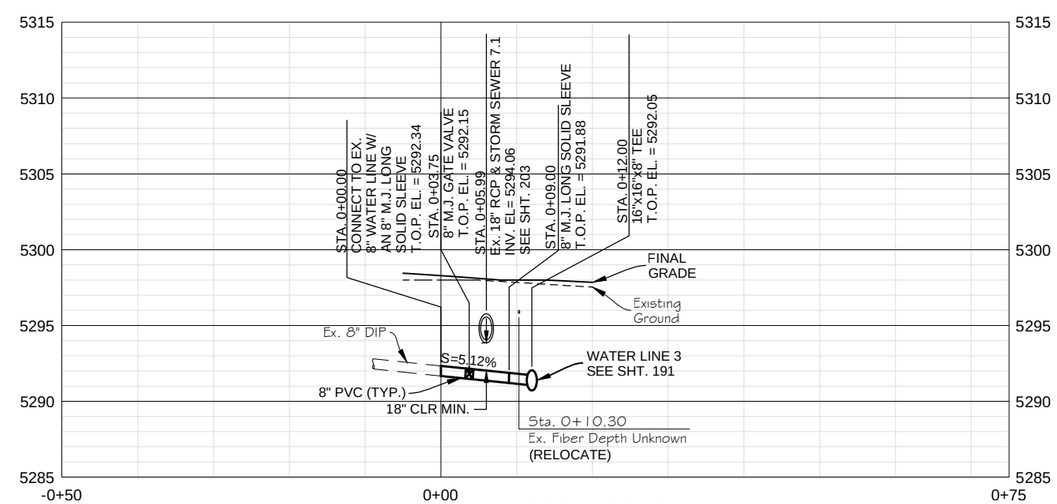

WATER LINE 3.2 PROFILE

SCALE: HORIZ. 1"=20'
VERT. 1"=10'

Computer File Information		
Creation Date: 10/06/14	Initials: JHK	
Last Modification Date: 06/18/15	Initials: JHK	
Full Path: P:\11-039.03\WONDERLAND\CAD		
Drawing File Name: 11-039.03_UTIL-WATER P&P.dwg		
AutoCAD 2010	Scale: AS SHOWN	

MULLER ENGINEERING CO., INC.
CONSULTING ENGINEERS
777 S. WADSWORTH BLVD. 4-100
LAKEWOOD, COLORADO 80226
(303) 988-4939
MULLER
MEC PROJECT NO. 11039.03

COLORADO REGISTERED PROFESSIONAL ENGINEER CHRISTOPHER L. KABELER 37254 6/18/15

Sheet Revisions		
Date:	Comments	Init.

As Constructed
No Revisions:
Revised:
Void:

GREATER DENVER AREA DRAINAGE AND FLOOD CONTROL DISTRICT
CO CDOT Region 4 RDM
CITY OF BOULDER

WONDERLAND CREEK - GREENWAYS IMPROVEMENT PROJECT
WATER LINES 3.1 & 3.2 PLAN & PROFILE

Designer:	JW3	Structure Numbers	
Detailer:	JHK		
Sheet Subset:	UTILITY	Subset Sheets:	WL-4

Project No./Code
STM 110-081
18405
Sheet Number: 192

PLOTTED: 10/6/2014 1:26:26 PM
NAME: P:\11-039.03 WONDERLAND CREEK - LOWER REACH - FINAL DESIGN\CAD\11-039.03_UTIL-WATER P&P.DWG

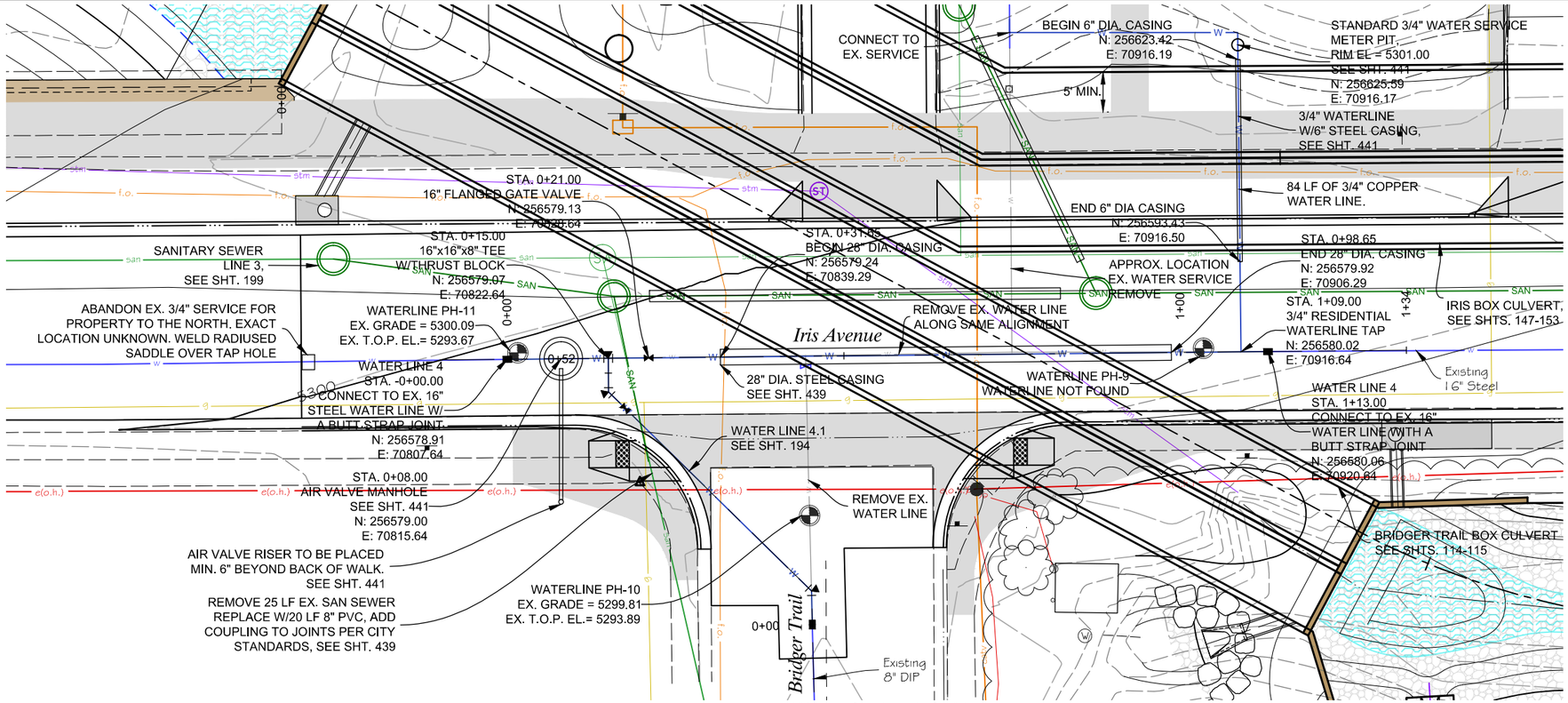

WATER LINE 4 PLAN

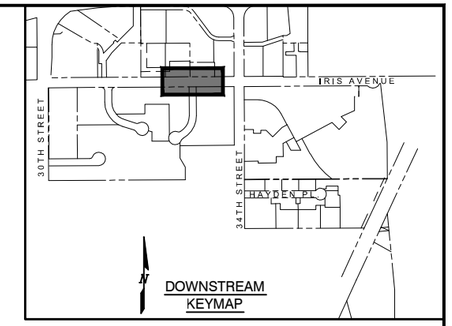

NOTES:

1. WORK ON THE IRIS AVENUE 16" STEEL WATER LINE MAY ONLY BE COMPLETED BETWEEN OCTOBER 15TH AND APRIL 15TH.
2. CONTRACTOR SHALL VERIFY LOCATIONS OF ALL UTILITIES AT TIE-IN LOCATIONS PRIOR TO CONSTRUCTION. THESE LOCATIONS SHALL BE REVIEWED WITH ENGINEER PRIOR TO CONSTRUCTION.
3. ALL BENDS AND FITTINGS SHALL BE RESTRAINED IN ACCORDANCE WITH THE CITY OF BOULDER NOTES AND DETAILS.
4. ABBREVIATIONS:
   -T.O.P. = TOP OF PIPE
   -EL. = ELEVATION
5. EXISTING STEEL WATER LINE IS A CLASS "H" PIPE WITH A PIPE THICKNESS OF 0.219".
6. THE 8" LEG OF THE 16"x16"x8" TEE SHALL HAVE THE OUTER DIAMETER OF AN 8" CAST IRON PIPE.

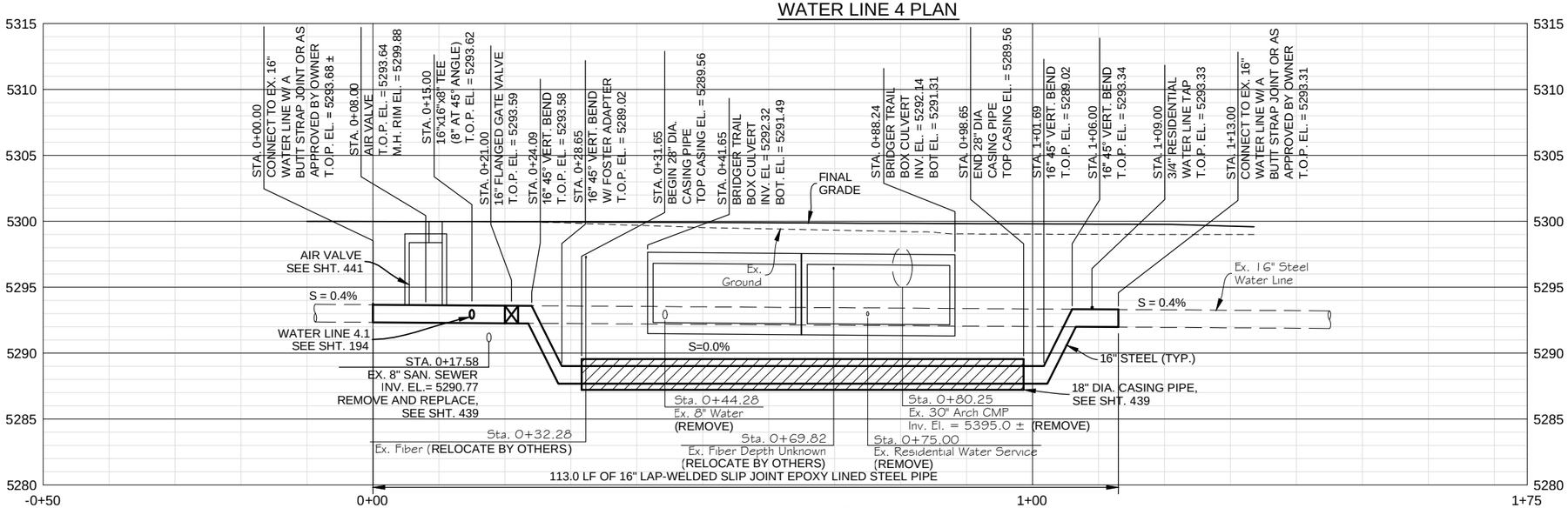

WATER LINE 4 PROFILE

SCALE: HORIZ. 1"=20'
VERT. 1"=10'

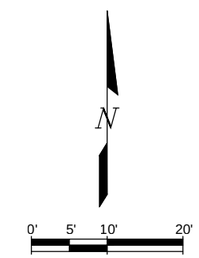

Computer File Information		
Creation Date: 10/06/14	Initials: JHK	
Last Modification Date: 06/18/15	Initials: JHK	
Full Path: P:\11-039.03\WONDERLAND\CAD		
Drawing File Name: 11-039.03_UTIL-WATER P&P.dwg		
AutoCAD 2010	Scale: AS SHOWN	

MULLER ENGINEERING CO., INC.
CONSULTING ENGINEERS
777 S. WADSWORTH BLVD. 4-100
LAKEWOOD, COLORADO 80226
(303) 988-4939
MULLER
MEC PROJECT NO. 11039.03

COLORADO REGISTERED PROFESSIONAL ENGINEER CHRISTOPHER L. KRAGENBRINK 37254 6/18/15

Sheet Revisions		
Date:	Comments	Init.

As Constructed
No Revisions:
Revised:
Void:

Region 4 RDM
CITY OF BOULDER

WONDERLAND CREEK - GREENWAYS IMPROVEMENT PROJECT
WATER LINE 4 PLAN & PROFILE

Designer:	JW3	Structure Numbers	
Detailer:	JHK		
Sheet Subset:	UTILITY	Subset Sheets:	WL-5

Project No./Code
STM 110-081
18405
Sheet Number: 193

PLOTTED: 10/6/2014 1:26:26 PM
NAME: P:\11-039.03 WONDERLAND CREEK LOWER REACH -FINAL DESIGN\CAD\11-039.03_UTIL-WATER P&P.DWG

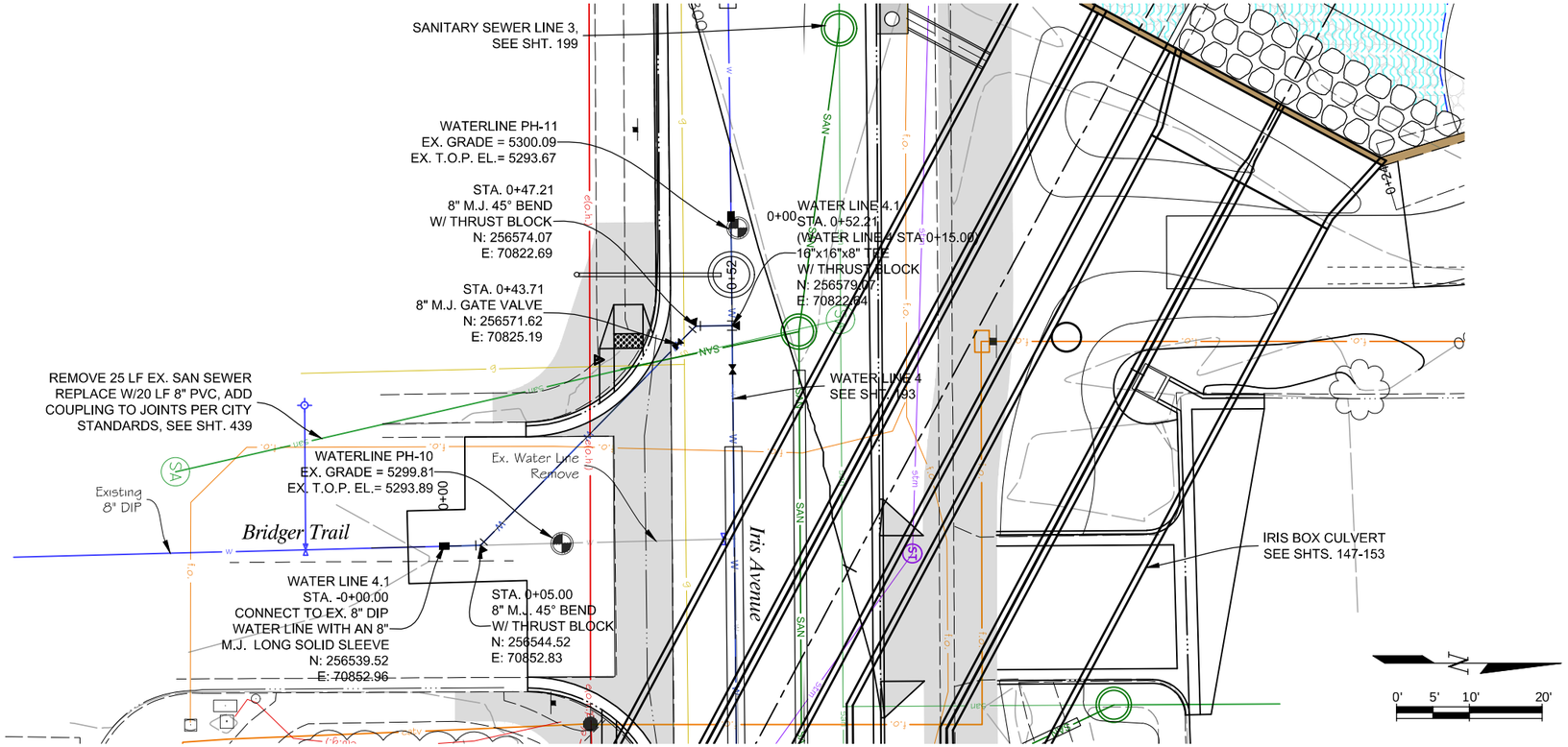

WATER LINE 4.1 PLAN

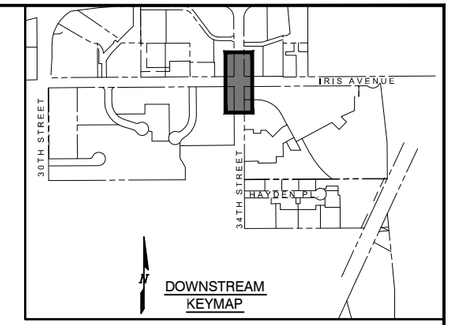

NOTES:

1. WORK ON THE IRIS AVENUE 16" STEEL WATER LINE MAY ONLY BE COMPLETED BETWEEN OCTOBER 15TH AND APRIL 15TH.
2. CONTRACTOR SHALL VERIFY LOCATIONS OF ALL UTILITIES AT TIE-IN LOCATIONS PRIOR TO CONSTRUCTION. THESE LOCATIONS SHALL BE REVIEWED WITH ENGINEER PRIOR TO CONSTRUCTION.
3. ALL BENDS AND FITTINGS SHALL BE RESTRAINED IN ACCORDANCE WITH THE CITY OF BOULDER NOTES AND DETAILS.
4. ABBREVIATIONS:
   -DIP = DUCTILE IRON PIPE
   -M.J. = MECHANICAL JOINT
   -T.O.P. = TOP OF PIPE
   -EL. = ELEVATION
5. ALL PROPOSED PIPE SHALL BE PVC CLASS C900.
6. THE 8" LEG OF THE 16"x16"x8" TEE SHALL HAVE THE OUTER DIAMETER OF AN 8" CAST IRON PIPE.

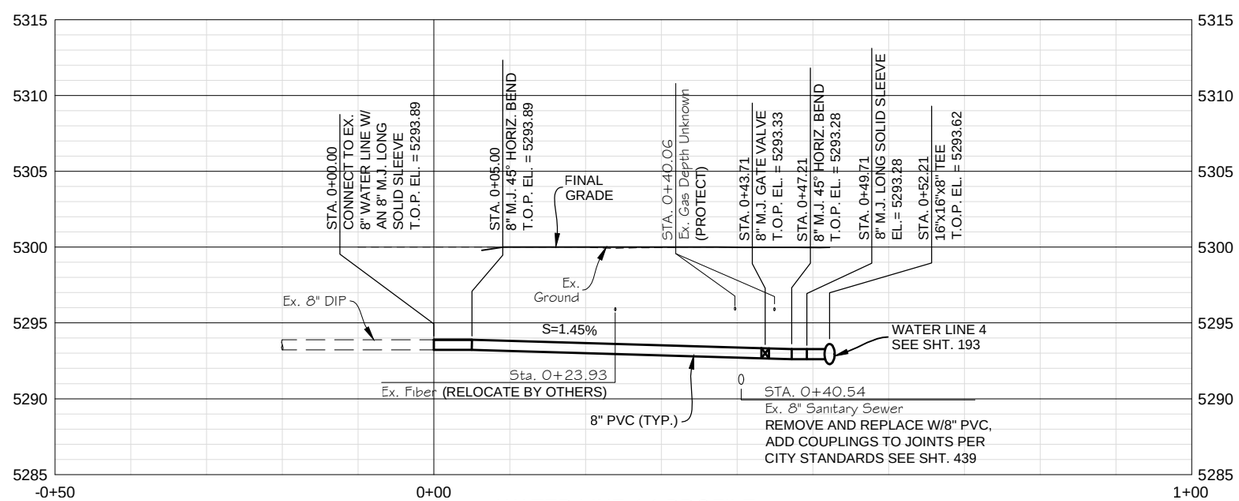

WATER LINE 4.1 PROFILE

SCALE: HORIZ. 1"=20'
VERT. 1"=10'

Computer File Information			
Creation Date: 10/06/14		Initials: JHK	
Last Modification Date: 06/18/15		Initials: JHK	
Full Path: P:\11-039.03\WONDERLAND\CAD			
Drawing File Name: 11-039.03_UTIL-WATER P&P.dwg			
AutoCAD 2010	Scale: AS SHOWN		

MULLER ENGINEERING CO., INC.
CONSULTING ENGINEERS
777 S. WADSWORTH BLVD. 4-100
LAKEWOOD, COLORADO 80226
(303) 988-4939
MULLER
MEC PROJECT NO. 11039.03

COLORADO REGISTERED PROFESSIONAL ENGINEER CHRISTOPHER L. KRIEGER 37254 6/18/15

Sheet Revisions		
Date:	Comments	Init.

As Constructed
No Revisions:
Revised:
Void:

Region 4 RDM

CITY OF BOULDER

WONDERLAND CREEK - GREENWAYS IMPROVEMENT PROJECT

WATER LINE 4.1 PLAN & PROFILE

Designer:	JW3	Structure Numbers	
Detailer:	JHK		
Sheet Subset:	UTILITY	Subset Sheets:	WL-6

Project No./Code
STM 110-081
18405
Sheet Number: 194

PLOTTED: 10/6/2014 1:26:26 PM
NAME: P:\11-039.03 WONDERLAND CREEK LOWER REACH -FINAL DESIGN\CAD\11-039.03_UTIL-WATER P&P.DWG

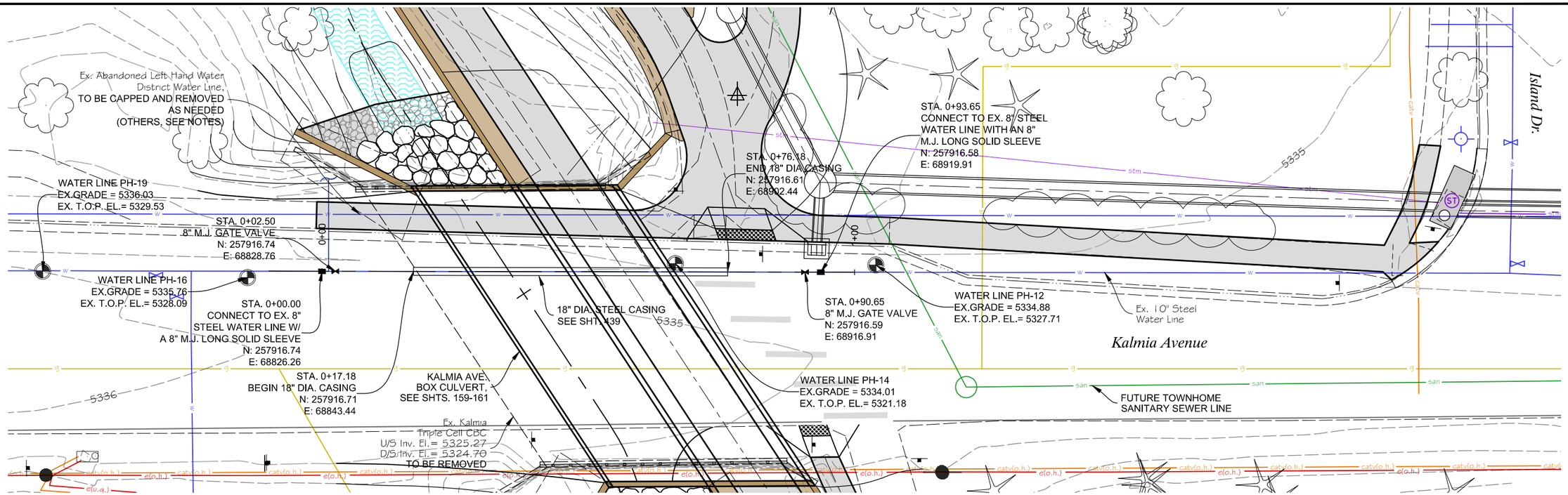

WATER LINE 5 PLAN

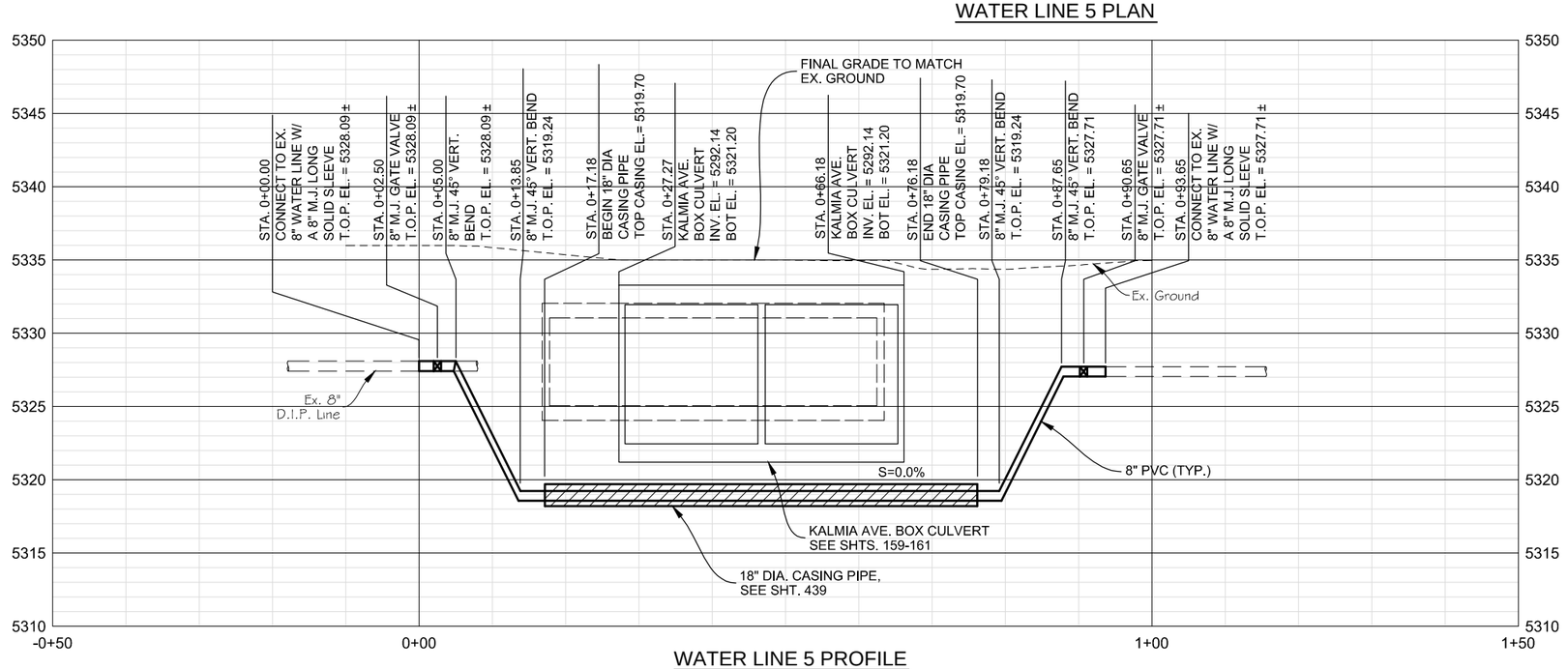

WATER LINE 5 PROFILE

SCALE: HORIZ. 1"=20'
VERT. 1"=10'

NOTES:

1. CONTRACTOR SHALL VERIFY LOCATIONS OF ALL UTILITIES AT TIE-IN LOCATIONS PRIOR TO CONSTRUCTION. THESE LOCATIONS SHALL BE REVIEWED WITH ENGINEER PRIOR TO CONSTRUCTION.
2. ALL BENDS AND FITTINGS SHALL BE RESTRAINED IN ACCORDANCE WITH THE CITY OF BOULDER NOTES AND DETAILS.
3. ABBREVIATIONS:
   -DIP = DUCTILE IRON PIPE
   -M.J. = MECHANICAL JOINT
   -T.O.P. = TOP OF PIPE
   -EL. = ELEVATION
4. ALL PROPOSED PIPE SHALL BE PVC CLASS C900.
5. IF IN CONFLICT THE EXISTING LEFT HAND WATER 1" WATER LINE SHALL BE EXCAVATED AND EXPOSED BY THE CONTRACTOR. LEFT HAND SHALL BE RESPONSIBLE FOR OPERATING ALL VALVES, CUTTING AND REMOVING THE WATER LINE AS NEEDED, INSTALLING A PLUG AND CONSTRUCTING THE THRUST BLOCK. THE CONTRACTOR SHALL BACKFILL THE WATERLINE.

N

0' 5' 10' 20'

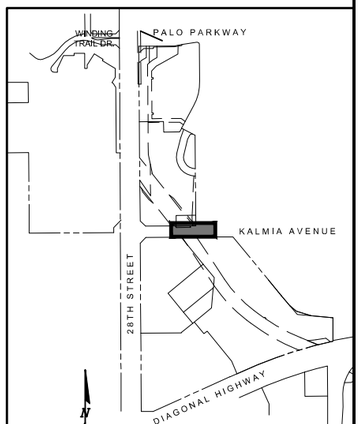

UPSTREAM KEYMAP

Computer File Information			
Creation Date: 10/06/14	Initials: JHK		
Last Modification Date: 06/18/15	Initials: JHK		
Full Path: P:\11-039.03\WONDERLAND\CAD			
Drawing File Name: 11-039.03_UTIL-WATER P&P.dwg			
AutoCAD 2010	Scale: AS SHOWN		

MULLER ENGINEERING CO., INC.
CONSULTING ENGINEERS
777 S. WADSWORTH BLVD. 4-100
LAKEWOOD, COLORADO 80226
(303) 988-4939
MULLER
MEC PROJECT NO. 11039.03

COLORADO REGISTERED CHRISTOPHER L. KREBERS 37254 6/18/15 PROFESSIONAL ENGINEER

Sheet Revisions		
Date:	Comments	Init.

As Constructed
No Revisions:
Revised:
Void:

GREATER DENVER AREA MS4 STORMWATER & FLOOD CONTROL COMMUNITY

CO CDOT Region 4 RDM

CITY OF BOULDER

WONDERLAND CREEK - GREENWAYS IMPROVEMENT PROJECT

WATER LINE 5 PLAN & PROFILE

Designer:	JW3	Structure Numbers	
Detailer:	JHK		
Sheet Subset:	UTILITY	Subset Sheets:	WL-7

Project No./Code
STM 110-081
18405
Sheet Number: 195

PLOTTED: 10/6/2014 1:26:26 PM
NAME: P:\11-039.03 WONDERLAND CREEK LOWER REACH -FINAL DESIGN\CAD\11-039.03_UTIL-WATER P&P.DWG

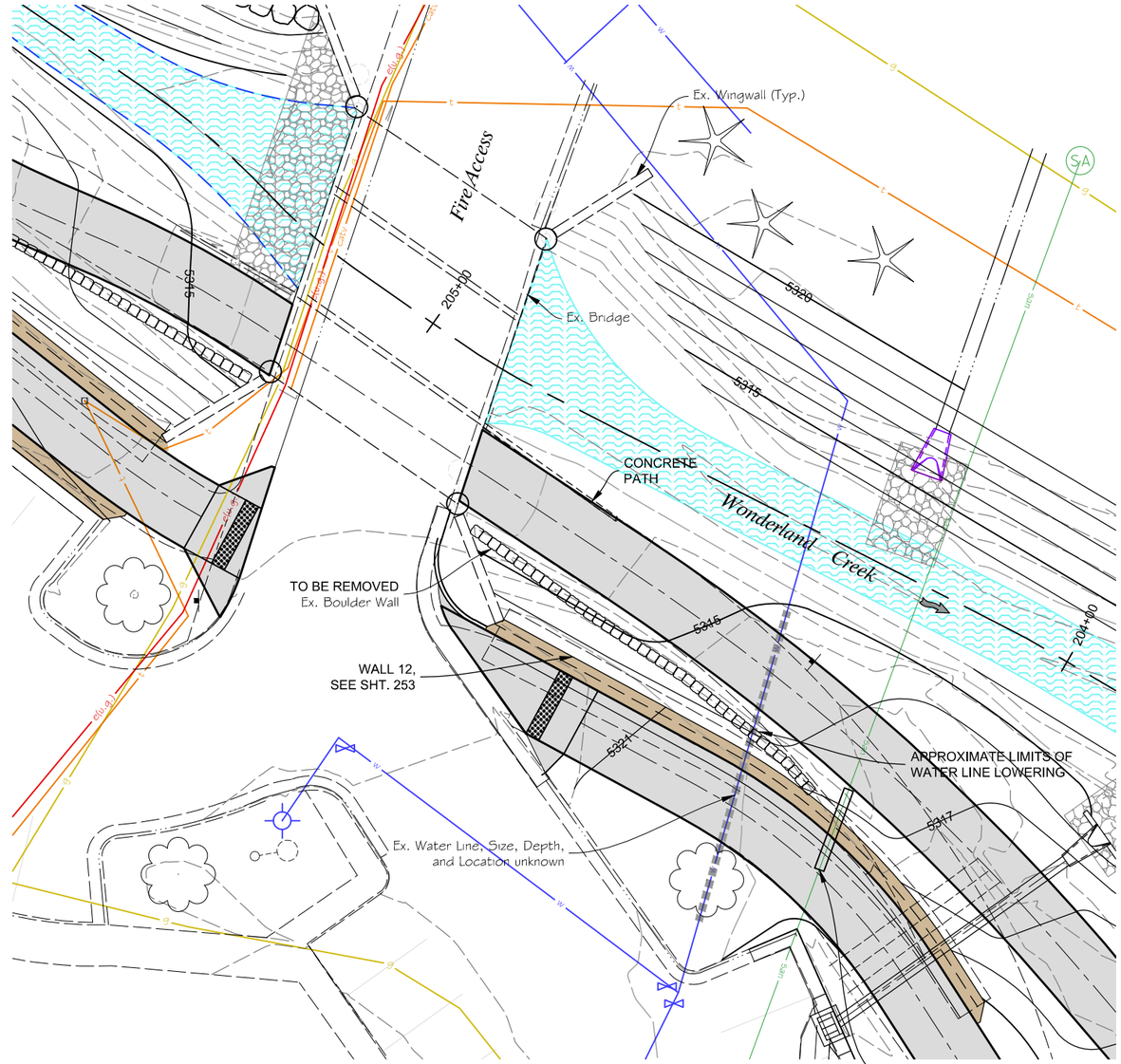

WATER LINE 6 PLAN

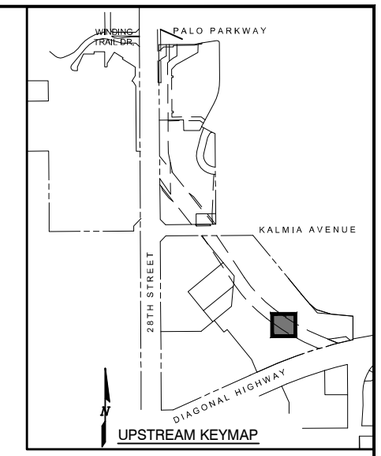

UPSTREAM KEYMAP

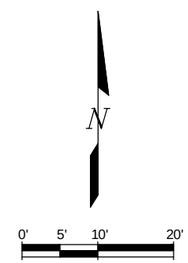

NOTE:
CONTRACTOR SHALL POTHOLE AND SURVEY LOCATION OF WATER LINE AND PROVIDE INFORMATION TO THE CITY OF BOULDER. IF WATER LINE IS IN CONFLICT WITH THE PROPOSED IMPROVEMENTS, THE CITY WILL COORDINATE THE PREPARATION OF DESIGN IMPROVEMENTS AND PROVIDE TO THE CONTRACTOR FOR PRICING.

SANITARY SEWER LINE 6 ENCASE IN CONCRETE MIN. OF 3' ON EITHER SIDE OF WALL FOOTER. CONTRACTOR TO VERIFY THE EXISTENCE OF A CONCRETE ENCASEMENT ACROSS WONDERLAND CREEK CHANNEL. IF NO ENCASEMENT EXISTS CONTRACTOR SHALL COORDINATE WITH ENGINEER TO DETERMINE WHETHER ADDITIONAL LINE PROTECTION IS REQUIRED. SEE SHTS. 253 AND 439

Computer File Information		
Creation Date: 10/06/14	Initials: JHK	
Last Modification Date: 06/18/15	Initials: JHK	
Full Path: P:\11-039.03\WONDERLAND\CAD		
Drawing File Name: 11-039.03_UTIL-WATER P&P.dwg		
AutoCAD 2010	Scale: AS SHOWN	

MULLER ENGINEERING CO., INC.
CONSULTING ENGINEERS
777 S. WADSWORTH BLVD. 4-100
LAKEWOOD, COLORADO 80226
(303) 988-4939
MULLER
MEC PROJECT NO. 11039.03

COLORADO REGISTERED PROFESSIONAL ENGINEER CHRISTOPHER L. KRAEBER 37254 6/18/15

Sheet Revisions		
Date:	Comments	Init.

As Constructed
No Revisions:
Revised:
Void:

Region 4 RDM

CITY OF BOULDER

WONDERLAND CREEK - GREENWAYS IMPROVEMENT PROJECT
WATER LINE 6 PLAN

Designer:	JW3	Structure Numbers	
Detailer:	JHK		
Sheet Subset:	UTILITY	Subset Sheets:	WL-8

Project No./Code
STM 110-081
18405
Sheet Number: 196

PLOTTED: 10/6/2014 1:26:26 PM
NAME: P:\11-039.03 WONDERLAND CREEK LOWER REACH -FINAL DESIGN\CAD\11-039.03_UTIL-WATER P&P.DWG

NOTE:
EXISTING WATER LINE HAS BEEN SHOWN ACCORDING TO ASBUILT INFORMATION. ASBUILTS INDICATE THE WATER LINE IS 10-FT BELOW GRADE IN A 60-FT LONG SLEEVE IN THE VICINITY OF THE EXISTING CULVERT. CONTRACTOR TO CONFIRM DEPTH, CASING, AND ALIGNMENT.

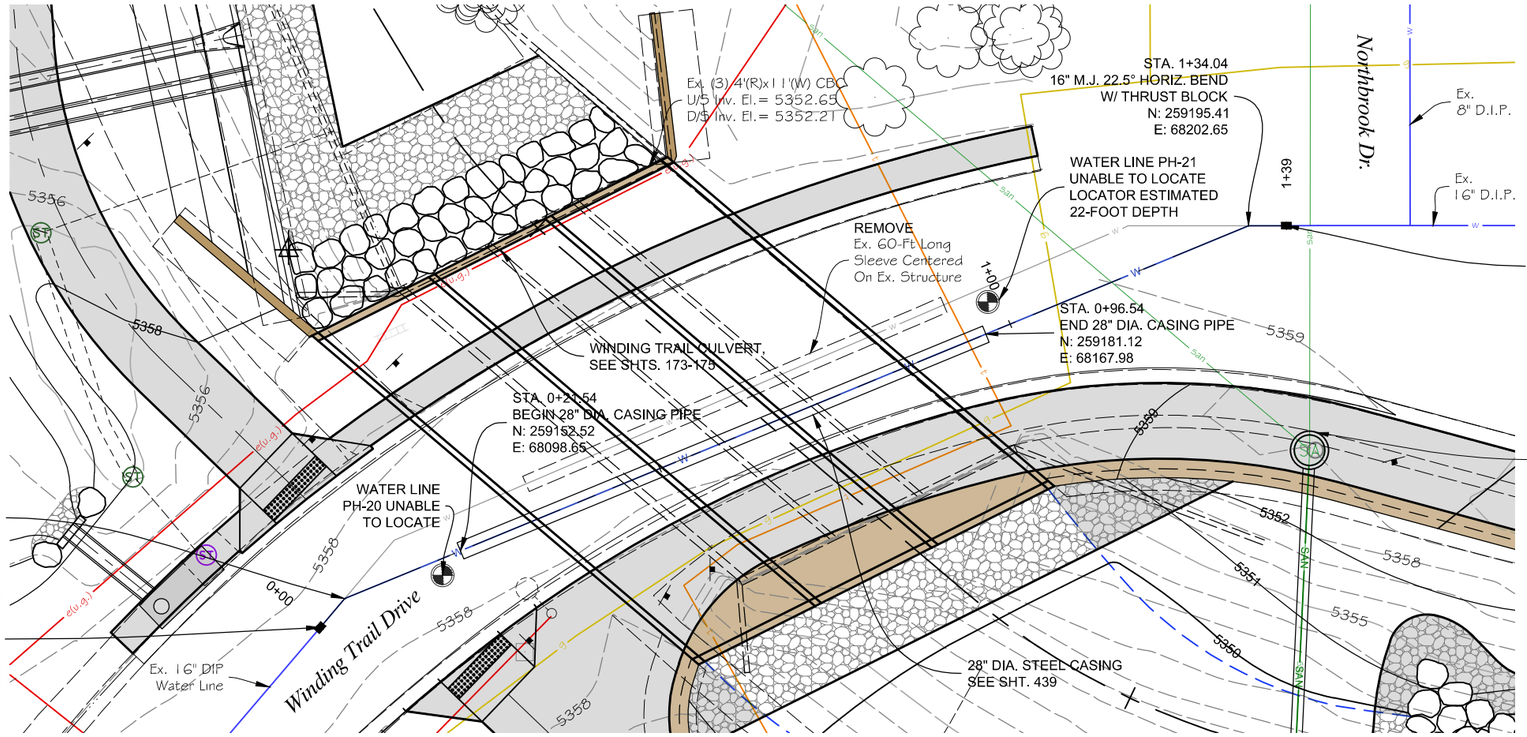

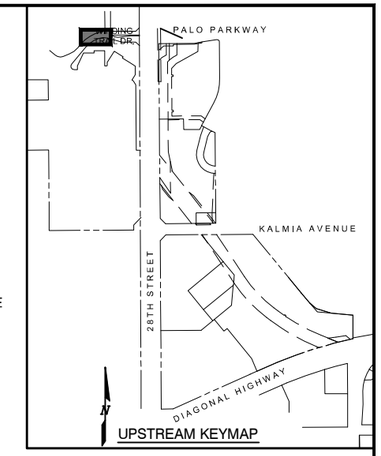

N

0' 5' 10' 20'

WATER LINE 7 PLAN

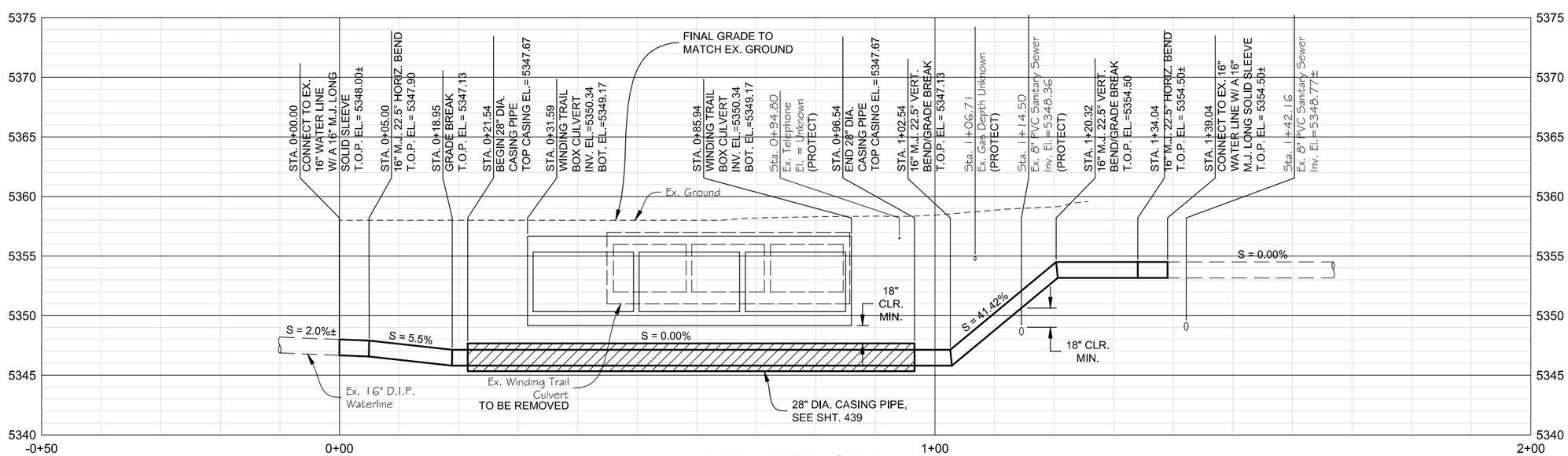

WATER LINE 7 PROFILE

SCALE: HORIZ. 1"=20'
VERT. 1"=10'

Computer File Information		
Creation Date: 10/06/14	Initials: JHK	
Last Modification Date: 06/18/15	Initials: JHK	
Full Path: P:\11-039.03\WONDERLAND\CAD		
Drawing File Name: 11-039.03_UTIL-WATER P&P.dwg		
AutoCAD 2010	Scale: AS SHOWN	

MULLER ENGINEERING CO., INC.
CONSULTING ENGINEERS
777 S. WADSWORTH BLVD. 4-100
LAKEWOOD, COLORADO 80226
(303) 988-4939
MULLER
MEC PROJECT NO. 11039.03

COLORADO REGISTERED PROFESSIONAL ENGINEER CHRISTOPHER L. KRUEGER 37254 6/18/15

Sheet Revisions		
Date:	Comments	Init.

As Constructed
No Revisions:
Revised:
Void:

GREENBELT FLOOD CONTROL DISTRICT
CDOT CO Region 4 RDM
CITY OF BOULDER

WONDERLAND CREEK - GREENWAYS IMPROVEMENT PROJECT
WATER LINE 7 PLAN & PROFILE

Designer:	JW3	Structure Numbers	
Detailer:	JHK		
Sheet Subset:	UTILITY	Subset Sheets:	WL-9

Project No./Code
STM 110-081
18405
Sheet Number: 197

PLOTTED: 10/6/2014 1:26:26 PM
NAME: P:\11-039.03 WONDERLAND CREEK LOWER REACH -FINAL DESIGN\CAD\11-039.03_UTIL-WATER P&P.DWG

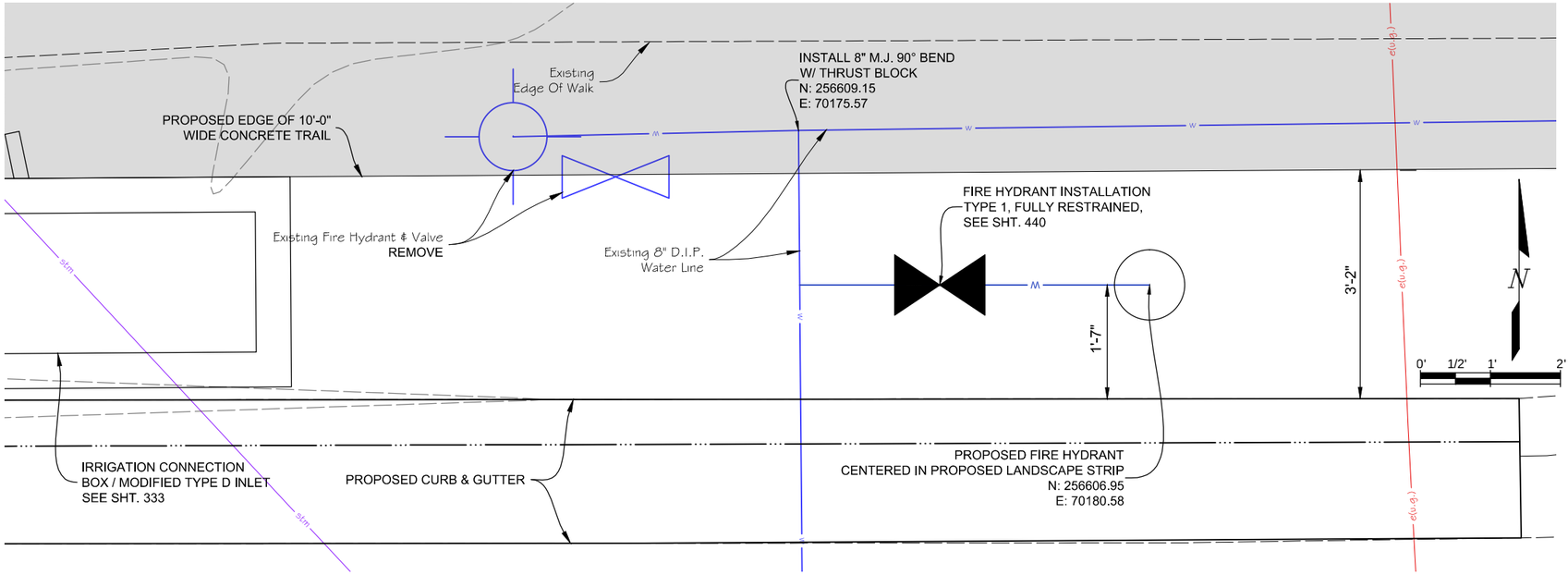

BANK ACCESS FIRE HYDRANT PLAN

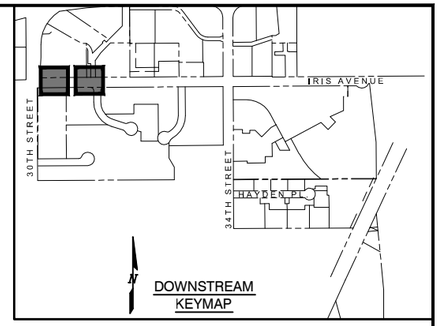

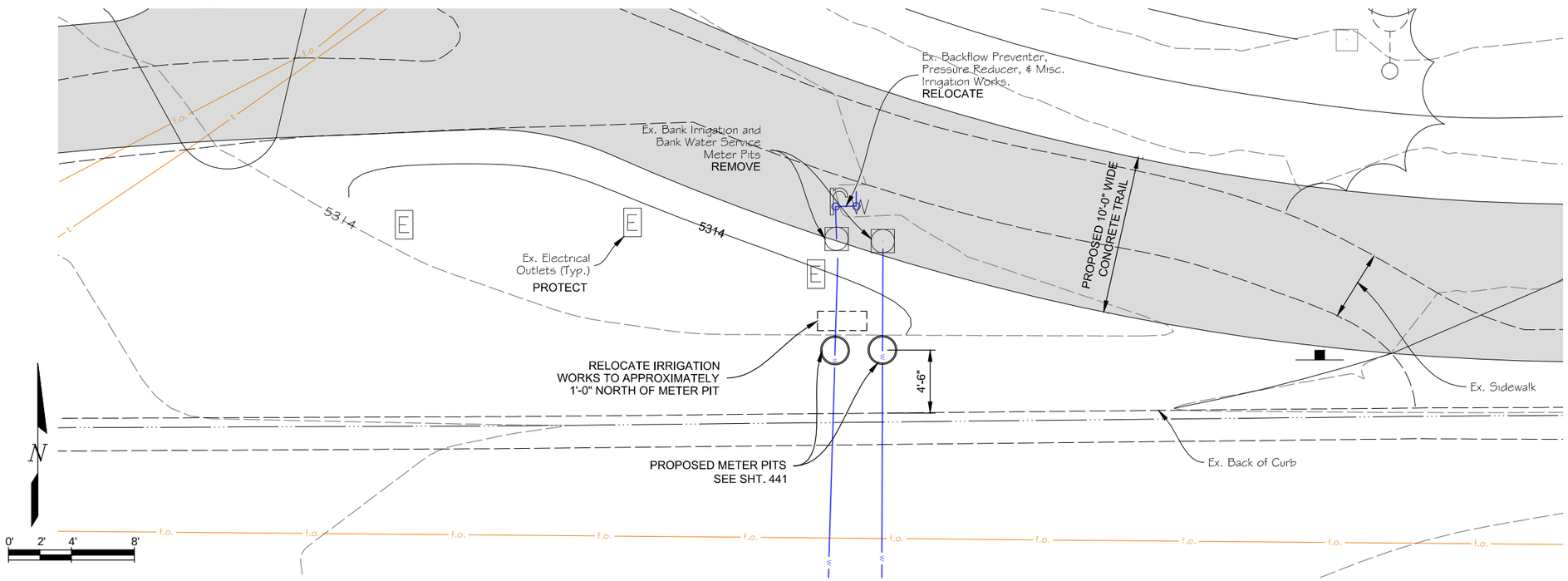

30th AND IRIS WATER METER RESET PLAN

Computer File Information			
Creation Date: 10/06/14		Initials: JHK	
Last Modification Date: 06/18/15		Initials: JHK	
Full Path: P:\11-039.03\WONDERLAND\CAD			
Drawing File Name: 11-039.03_UTIL-WATER P&P.dwg			
AutoCAD 2010	Scale: AS SHOWN		

MULLER ENGINEERING CO., INC.
CONSULTING ENGINEERS
777 S. WADSWORTH BLVD. 4-100
LAKEWOOD, COLORADO 80226
(303) 988-4939
MULLER
MEC PROJECT NO. 11039.03

COLORADO REGISTERED CHRISTOPHER L. KRIEGER 37254 6/18/15 PROFESSIONAL ENGINEER

Sheet Revisions		
Date:	Comments	Init.

As Constructed
No Revisions:
Revised:
Void:

Region 4 RDM

CITY OF BOULDER

WONDERLAND CREEK - GREENWAYS IMPROVEMENT PROJECT

WATER LINE MISCELLANEOUS

Designer:	JW3	Structure Numbers	
Detailer:	JHK		
Sheet Subset:	UTILITY	Subset Sheets:	WL-10

Project No./Code
STM 110-081
18405
Sheet Number: 198

PLOTTED: 10/6/2014 1:26:26 PM
NAME: P:\11-039.03 WONDERLAND CREEK LOWER REACH -FINAL DESIGN\CAD\11-039.03_UTIL-WATER P&P.DWG

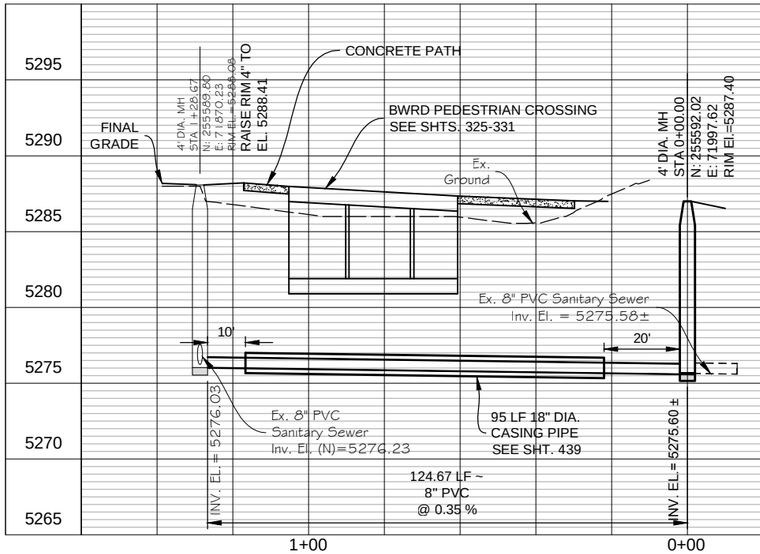

SANITARY SEWER LINE 1

SCALE: HORIZ. 1" = 40'
VERT. 1" = 10'

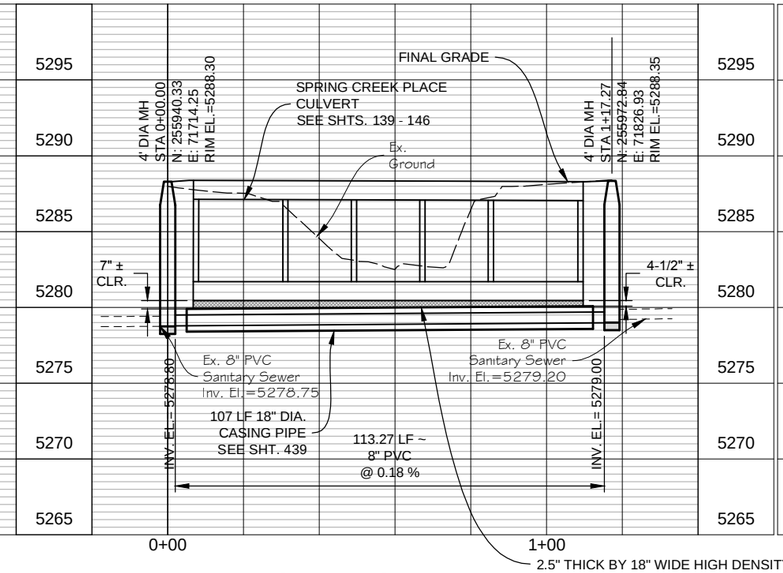

2.5" THICK BY 18" WIDE HIGH DENSITY STYROFOAM TO BE PLACED BETWEEN SPRING CREEK PLACE CROSSING AND CASING PIPE. TO BE INCLUDED IN COST OF SPRING CREEK PLACE STRUCTURE.

SANITARY SEWER LINE 2

SCALE: HORIZ. 1" = 40'
VERT. 1" = 10'

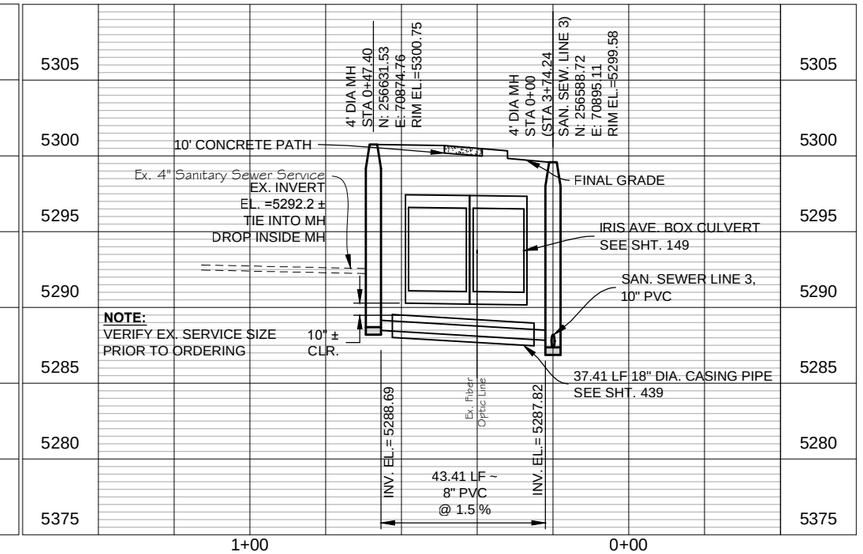

SANITARY SEWER LINE 4

SCALE: HORIZ. 1" = 40'
VERT. 1" = 10'

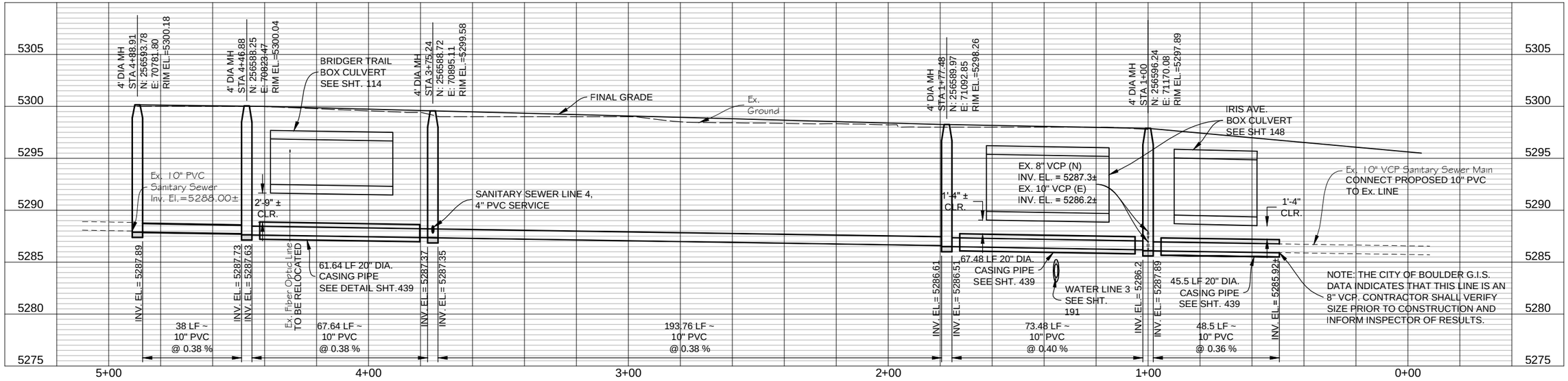

SANITARY SEWER LINE 3

SCALE: HORIZ. 1" = 40'
VERT. 1" = 10'

NOTE:
ALL LISTED NORTHING AND EASTINGS ARE REPORTED TO THE CENTER OF THE SANITARY SEWER MANHOLES, TYP. ALL SANITARY SEWER PROFILES.

Computer File Information		
Creation Date: 07/15/14	Initials: JHK	
Last Modification Date: 06/18/15	Initials: JHK	
Full Path: P:\11-039.03\CAD		
Drawing File Name: 11-039.03_UTIL-SAN Profile.dwg		
AutoCAD 2014	Scale: AS SHOWN	

MULLER ENGINEERING CO., INC.
CONSULTING ENGINEERS
777 S. WADSWORTH BLVD. 4-100
LAKEWOOD, COLORADO 80226
(303) 988-4939
MULLER
MEC PROJECT NO. 11039.03

COLORADO REGISTERED PROFESSIONAL ENGINEER CHRISTOPHER L. KADEL 37254 6/18/15

Sheet Revisions		
Date:	Comments	Init.

As Constructed
No Revisions:
Revised:
Void:

URBAN DRAINAGE AND FLOOD CONTROL DISTRICT
CDOT CO Region 4 RDM
CITY OF BOULDER

WONDERLAND CREEK - GREENWAYS IMPROVEMENT PROJECT
SANITARY SEWER PROFILES

Designer: JW3
Detailer: JHK
Sheet Subset: UTILITY
Structure Numbers
Subset Sheets: SS-1

Project No./Code
STM 110-081
18405
Sheet Number: 199

PLOTTED: 6/19/2015 11:12:38 AM
NAME: P:\11-039.03 WONDERLAND CREEK LOWER REACH -FINAL DESIGN\CAD\11-039.03_UTIL-SAN PROFILE.DWG

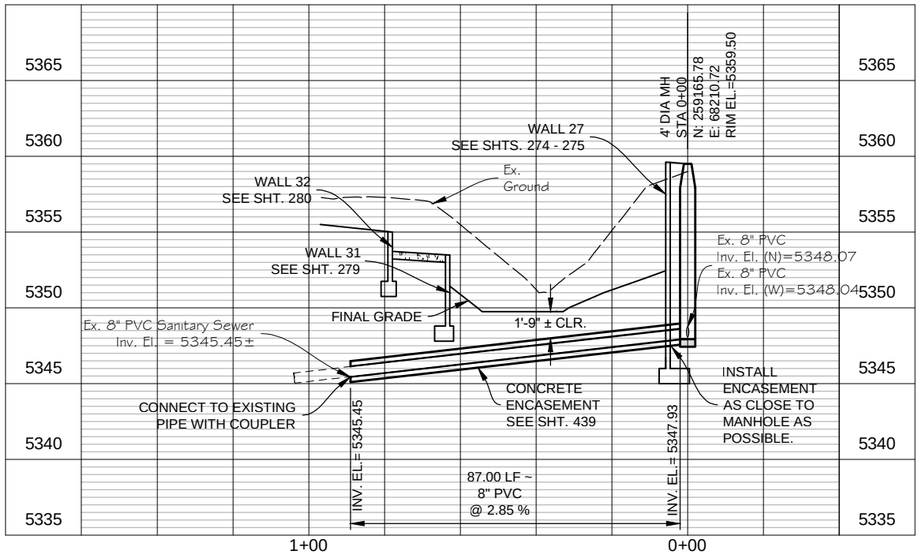

SANITARY SEWER LINE 5

SCALE: HORIZ. 1" = 40'
VERT. 1" = 10'

PLOTTED: 6/19/2015 11:12:44 AM
NAME: P:\11-039.03 WONDERLAND CREEK LOWER REACH -FINAL DESIGN\CAD\11-039.03_UTIL-SAN PROFILE.DWG

Computer File Information	
Creation Date: 07/15/14	Initials: JHK
Last Modification Date: 06/18/15	Initials: JHK
Full Path: P:\11-039.03\CAD	
Drawing File Name: 11-039.03_UTIL-SAN Profile.dwg	
AutoCAD 2014	Scale: AS SHOWN

MULLER ENGINEERING CO., INC.
CONSULTING ENGINEERS
777 S. WADSWORTH BLVD. 4-100
LAKEWOOD, COLORADO 80226
(303) 988-4939

MEC PROJECT NO. 11039.03

COLORADO REGISTERED PROFESSIONAL ENGINEER CHRISTOPHER L. KRIEGER 37254 6/18/15

Sheet Revisions		
Date:	Comments	Init.

As Constructed
No Revisions:
Revised:
Void:

Region 4 RDM

CITY OF BOULDER

WONDERLAND CREEK - GREENWAYS IMPROVEMENT PROJECT

SANITARY SEWER PROFILES

Designer:	JW3	Structure Numbers	
Detailer:	JHK		
Sheet Subset:	UTILITY	Subset Sheets:	SS-2

Project No./Code
STM 110-081
18405
Sheet Number: 200

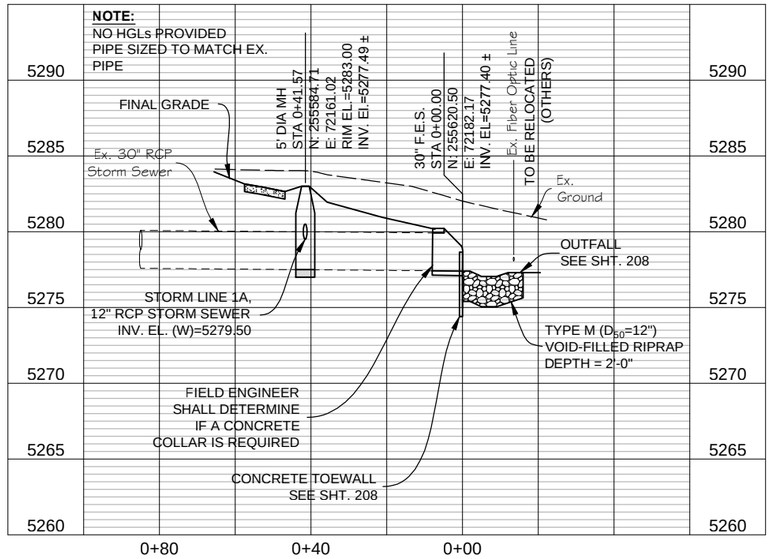

STORM LINE 1

SCALE: HORIZ. 1" = 40'
VERT. 1" = 10'

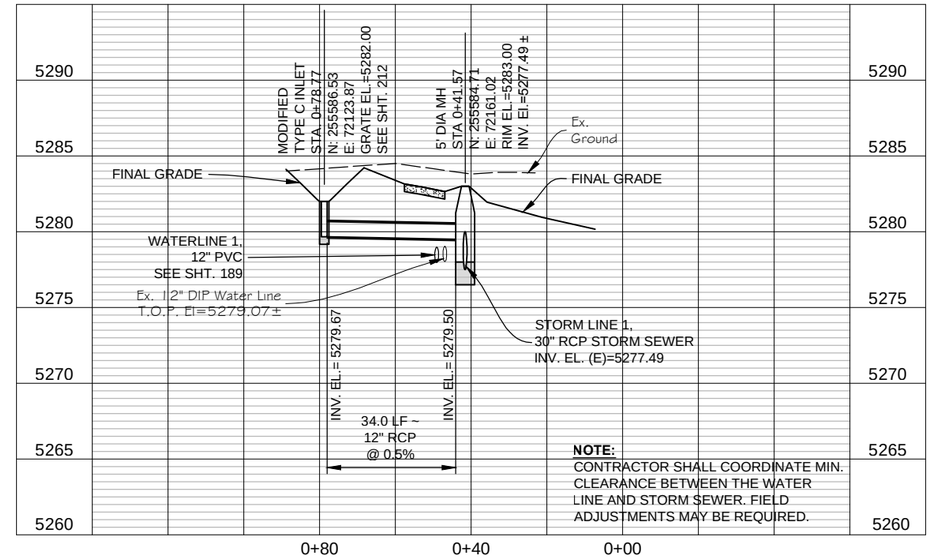

STORM LINE 1A

SCALE: HORIZ. 1" = 40'
VERT. 1" = 10'

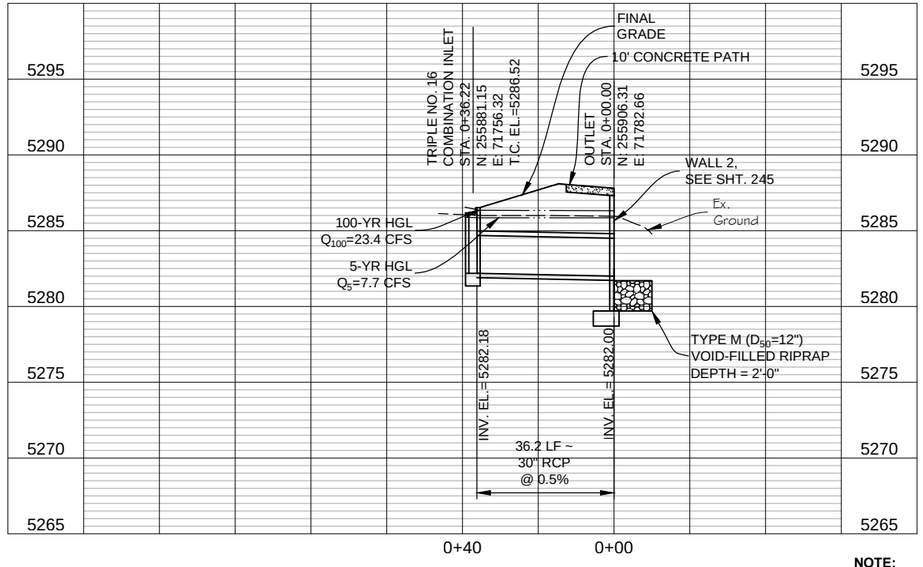

STORM LINE 2

SCALE: HORIZ. 1" = 40'
VERT. 1" = 10'

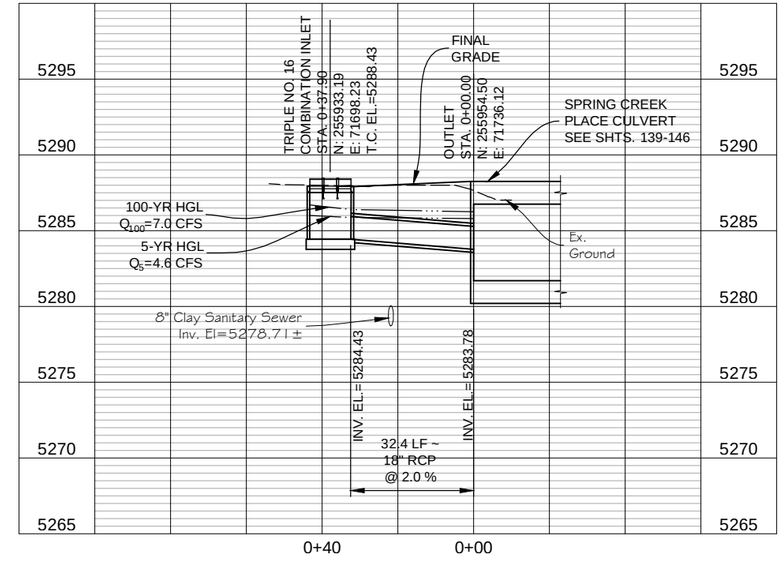

STORM LINE 3

SCALE: HORIZ. 1" = 40'
VERT. 1" = 10'

NOTE:
ALL LISTED NORTHING AND EASTINGS ARE REPORTED TO THE CENTER OF THE STORM MANHOLES AND TYPE C INLETS, TO THE CENTER OF THE PIPE OR FLARED END SECTION (F.E.S.) AT OUTFALLS, AND TO THE CENTER OF TYPE R AND TYPE 16 COMBINATION INLETS AT THE LOCATION OF THE INLET FLOW LINE, TYP. ALL STORM SEWER PROFILES.

Computer File Information		
Creation Date: 12/31/13		Initials: JHK
Last Modification Date: 06/18/15		Initials: JHK
Full Path: P:\11-039.03\CAD		
Drawing File Name: 11-039.03_UTIL-STORM Profile.dwg		
AutoCAD 2014	Scale: AS SHOWN	

MULLER ENGINEERING CO., INC.
CONSULTING ENGINEERS
777 S. WADSWORTH BLVD. 4-100
LAKEWOOD, COLORADO 80226
(303) 988-4939
MULLER
MEC PROJECT NO. 11039.03

COLORADO REGISTERED PROFESSIONAL ENGINEER CHRISTOPHER L. KREBS 37254 6/18/15

Sheet Revisions		
Date:	Comments	Init.

As Constructed
No Revisions:
Revised:
Void:

Region 4 RDM

CITY OF BOULDER

WONDERLAND CREEK - GREENWAYS IMPROVEMENT PROJECT

STORM SEWER PROFILES

Designer:	MKN	Structure Numbers	
Detailer:	JHK		
Sheet Subset:	UTILITY	Subset Sheets:	ST-1

Project No./Code
STM 110-081
18405
Sheet Number: 201

PLOTTED: 6/19/2015 11:14:04 AM
NAME: P:\11-039.03 WONDERLAND CREEK - LOWER REACH - FINAL DESIGN\CAD\11-039.03_UTIL-STORM PROFILE.DWG

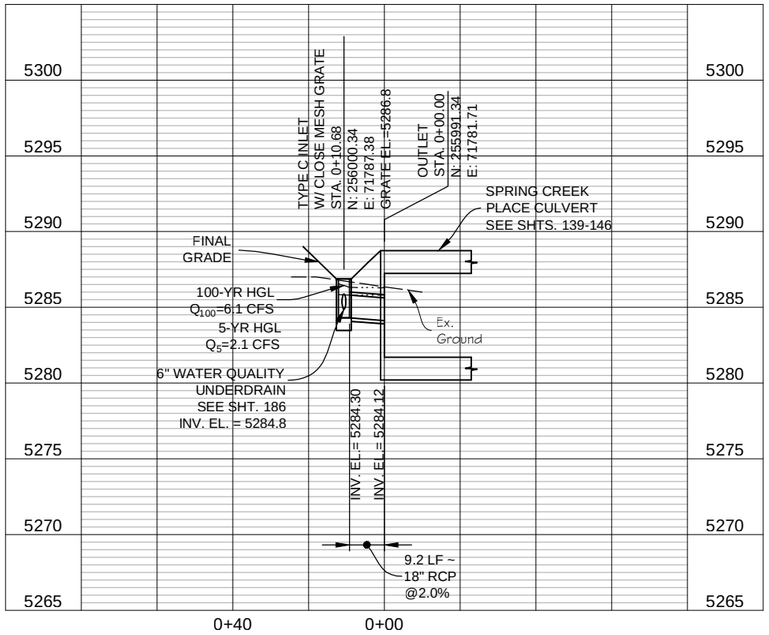

STORM LINE 4

SCALE: HORIZ. 1" = 40'
VERT. 1" = 10'

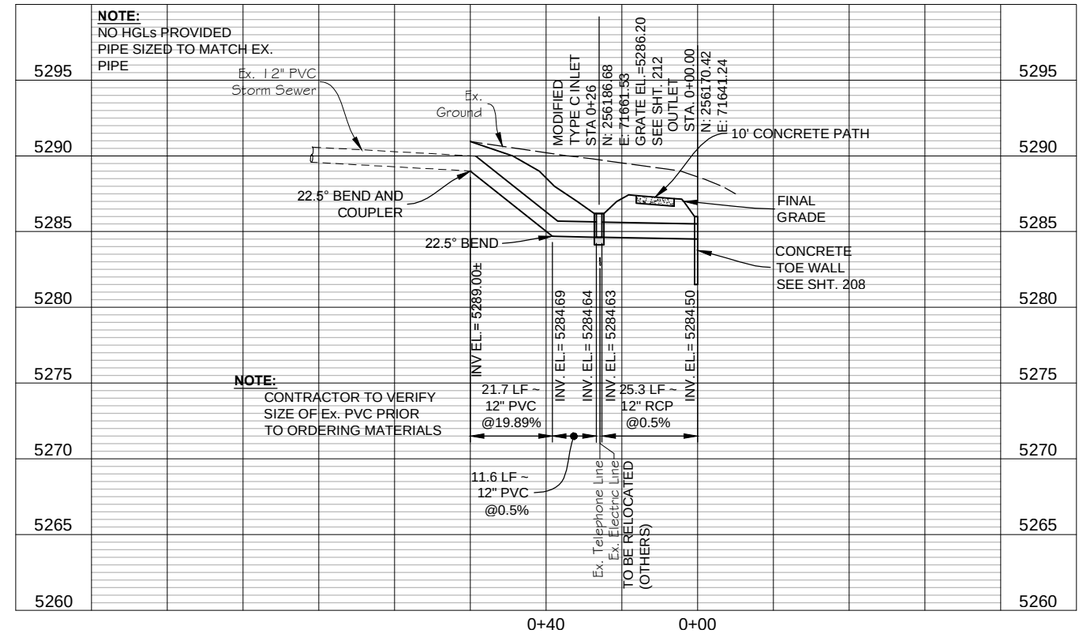

STORM LINE 5

SCALE: HORIZ. 1" = 40'
VERT. 1" = 10'

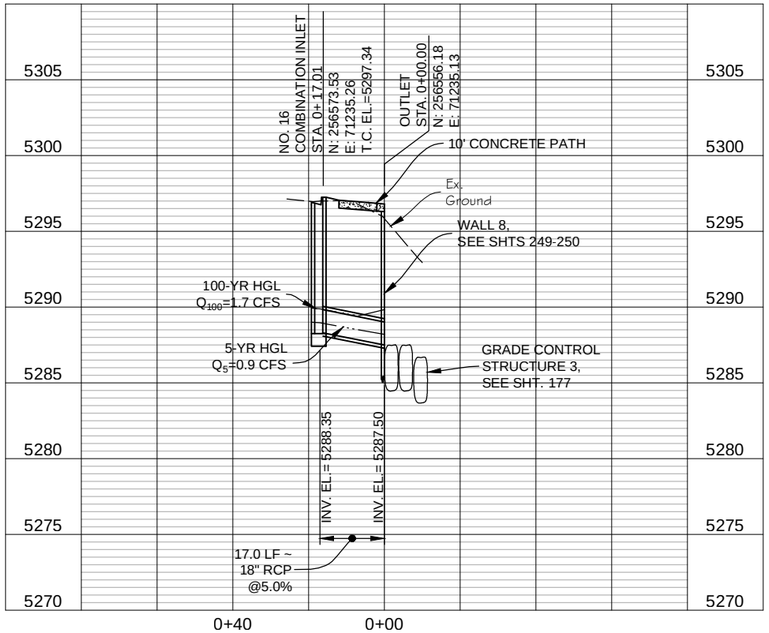

STORM LINE 6

SCALE: HORIZ. 1" = 40'
VERT. 1" = 10'

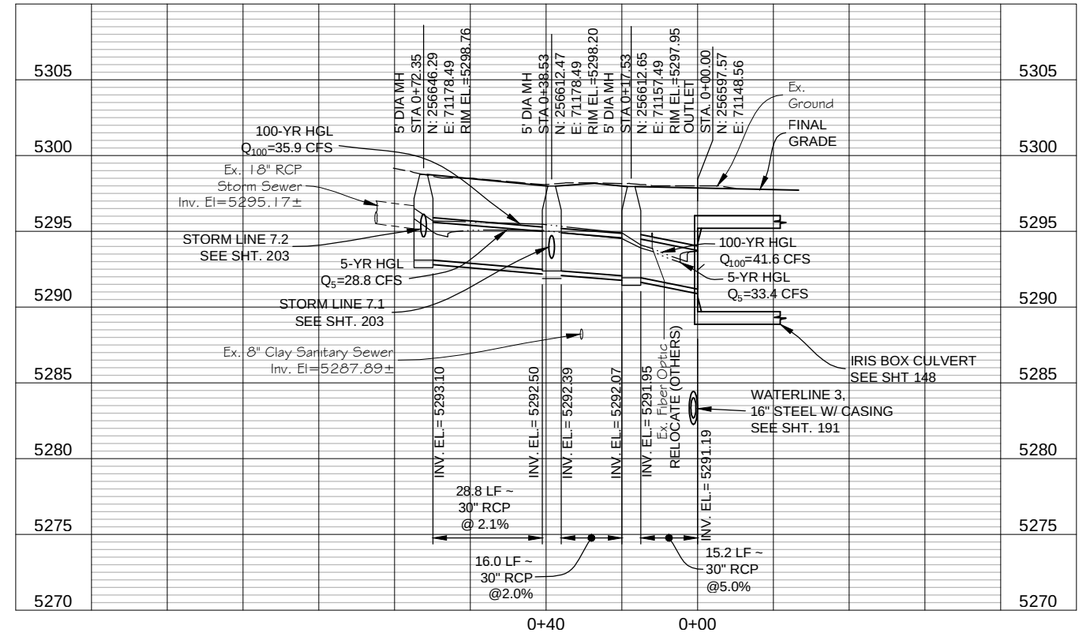

STORM LINE 7

SCALE: HORIZ. 1" = 40'
VERT. 1" = 10'

Computer File Information			
Creation Date: 12/31/13	Initials: JHK		
Last Modification Date: 06/18/15	Initials: JHK		
Full Path: P:\11-039.03\CAD			
Drawing File Name: 11-039.03_UTIL-STORM Profile.dwg			
AutoCAD 2014	Scale: AS SHOWN		

MULLER ENGINEERING CO., INC.
CONSULTING ENGINEERS
777 S. WADSWORTH BLVD. 4-100
LAKEWOOD, COLORADO 80226
(303) 988-4939
MULLER
MEC PROJECT NO. 11039.03

COLORADO REGISTERED PROFESSIONAL ENGINEER CHRISTOPHER L. KREGER 37254 6/18/15

Sheet Revisions		
Date:	Comments	Init.

As Constructed
No Revisions:
Revised:
Void:

Region 4 RDM
CITY OF BOULDER

WONDERLAND CREEK - GREENWAYS IMPROVEMENT PROJECT
STORM SEWER PROFILES

Designer:	MKN	Structure Numbers	
Detailer:	JHK		
Sheet Subset:	UTILITY	Subset Sheets:	ST-2

Project No./Code
STM 110-081
18405
Sheet Number: 202

PLOTTED: 6/19/2015 11:14:17 AM
NAME: P:\11-039.03 WONDERLAND CREEK LOWER REACH -FINAL DESIGN\CAD\11-039.03_UTIL-STORM PROFILE.DWG

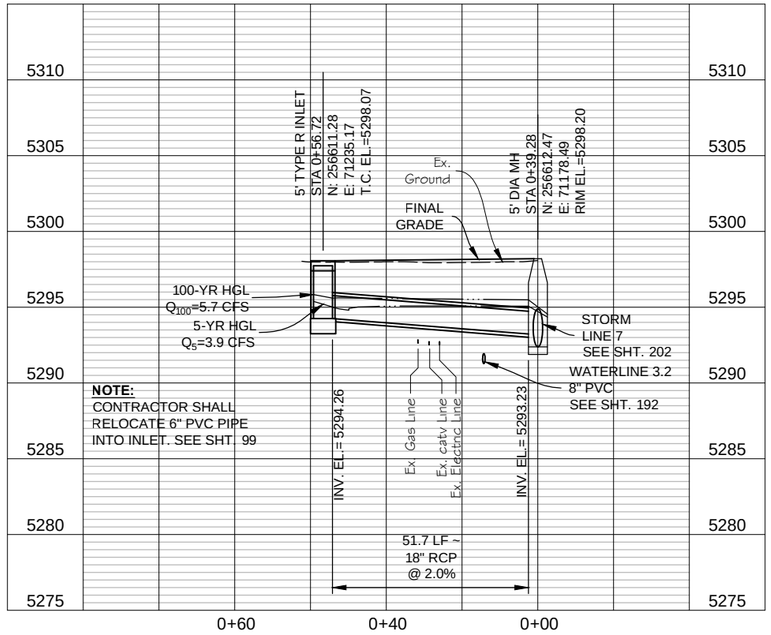

STORM LINE 7.1

SCALE: HORIZ. 1" = 40'
VERT. 1" = 10'

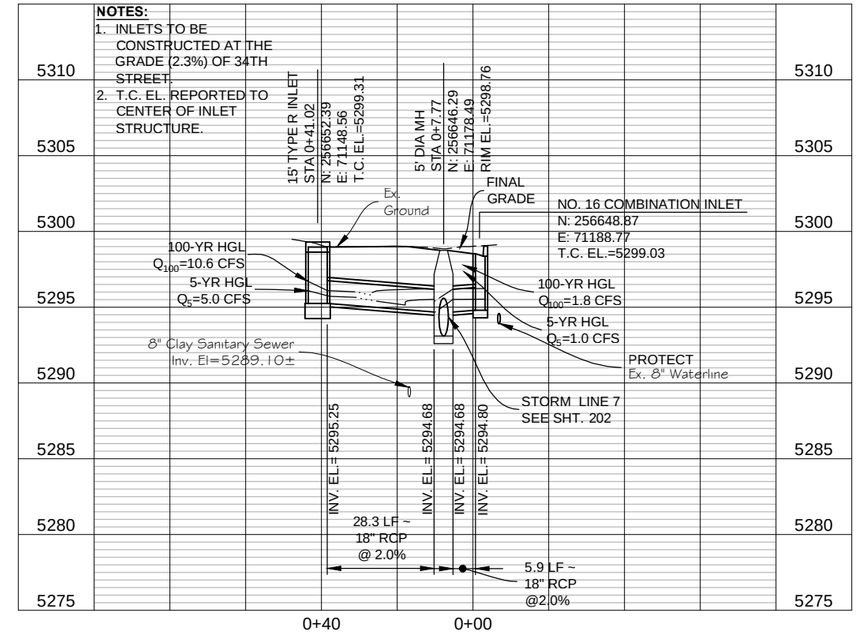

STORM LINE 7.2

SCALE: HORIZ. 1" = 40'
VERT. 1" = 10'

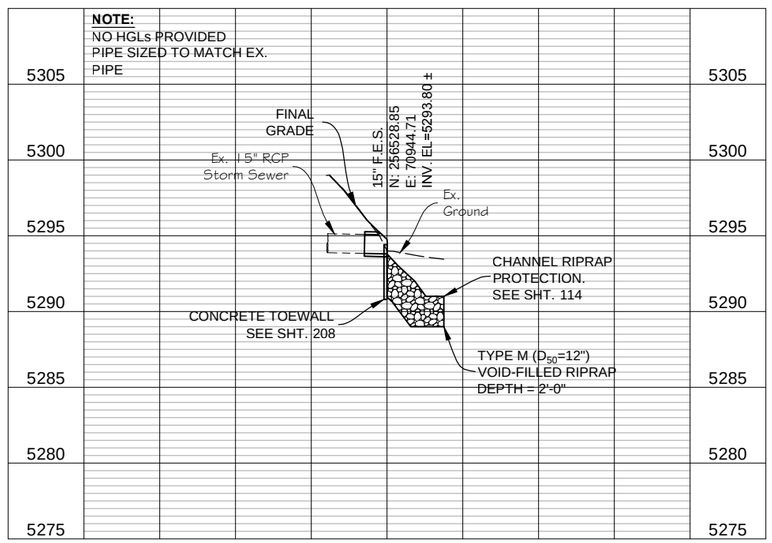

STORM LINE 8

SCALE: HORIZ. 1" = 40'
VERT. 1" = 10'

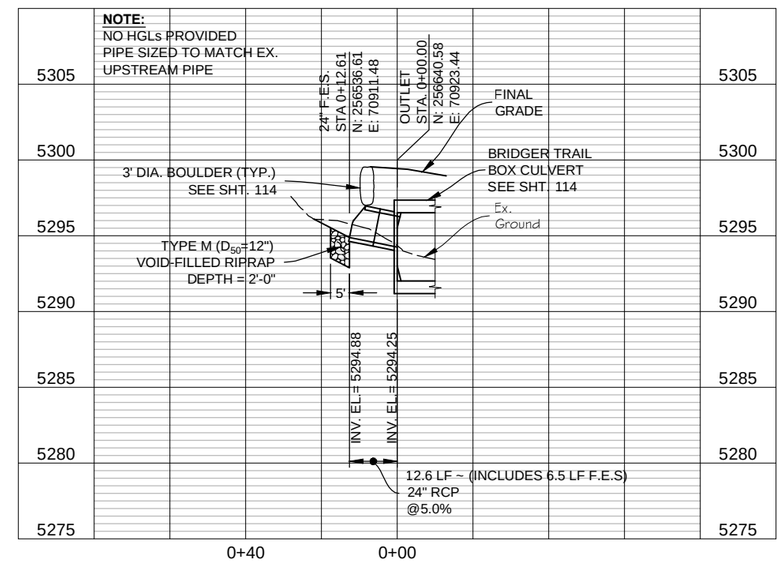

STORM LINE 9

SCALE: HORIZ. 1" = 40'
VERT. 1" = 10'

Computer File Information		
Creation Date: 12/31/13	Initials: JHK	
Last Modification Date: 06/18/15	Initials: JHK	
Full Path: P:\11-039.03\CAD		
Drawing File Name: 11-039.03_UTIL-STORM Profile.dwg		
AutoCAD 2014	Scale: AS SHOWN	

MULLER ENGINEERING CO., INC.
CONSULTING ENGINEERS
777 S. WADSWORTH BLVD. 4-100
LAKEWOOD, COLORADO 80226
(303) 988-4939
MULLER
MEC PROJECT NO. 11039.03

COLORADO REGISTERED PROFESSIONAL ENGINEER CHRISTOPHER L. KRUEGER 37254 6/18/15

Sheet Revisions		
Date:	Comments	Init.

As Constructed
No Revisions:
Revised:
Void:

GREENBELT AND FLOOD CONTROL DISTRICT
CDOT Region 4 RDM
CITY OF BOULDER

WONDERLAND CREEK - GREENWAYS IMPROVEMENT PROJECT
STORM SEWER PROFILES

Designer:	MKN	Structure Numbers	
Detailer:	JHK		
Sheet Subset:	UTILITY	Subset Sheets:	ST-3

Project No./Code
STM 110-081
18405
Sheet Number: 203

PLOTTED: 6/19/2015 11:14:29 AM
NAME: P:\11-039.03 WONDERLAND CREEK LOWER REACH -FINAL DESIGN\CAD\11-039.03_UTIL-STORM PROFILE.DWG

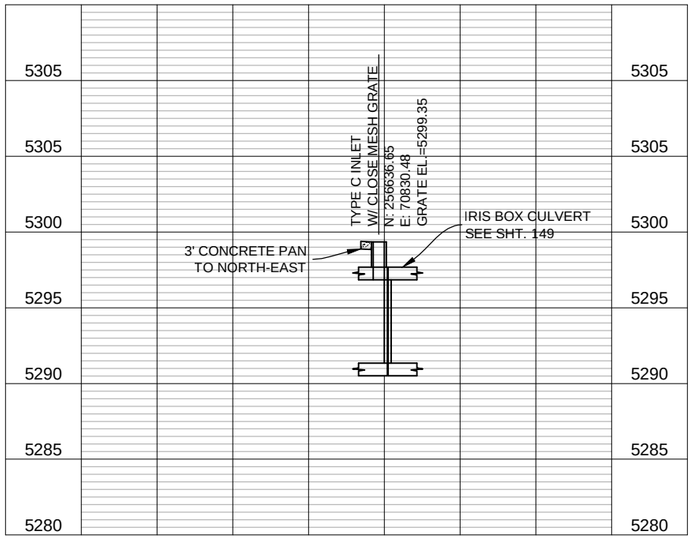

STORM LINE 10
SCALE: HORIZ. 1" = 40'
VERT. 1" = 10'

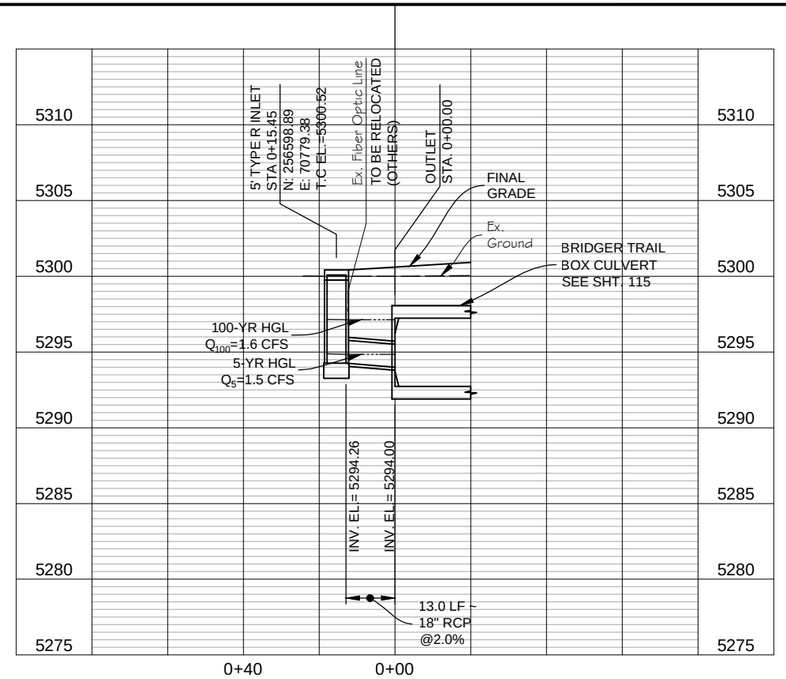

STORM LINE 11
SCALE: HORIZ. 1" = 40'
VERT. 1" = 10'

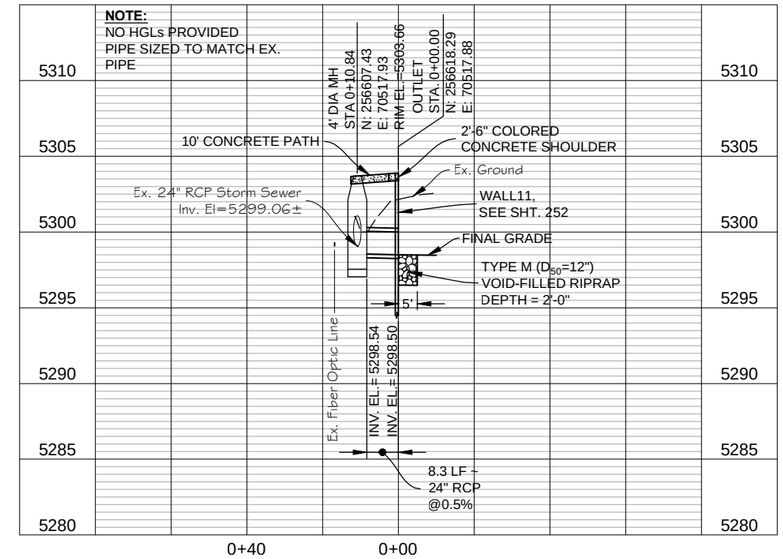

STORM LINE 12
SCALE: HORIZ. 1" = 40'
VERT. 1" = 10'

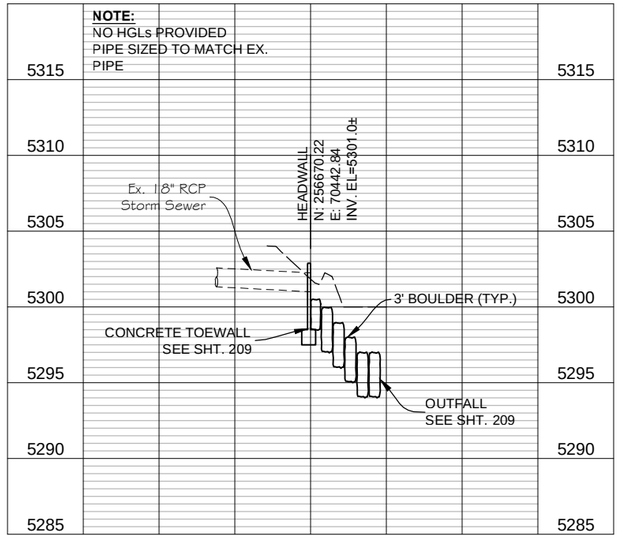

STORM LINE 13
SCALE: HORIZ. 1" = 40'
VERT. 1" = 10'

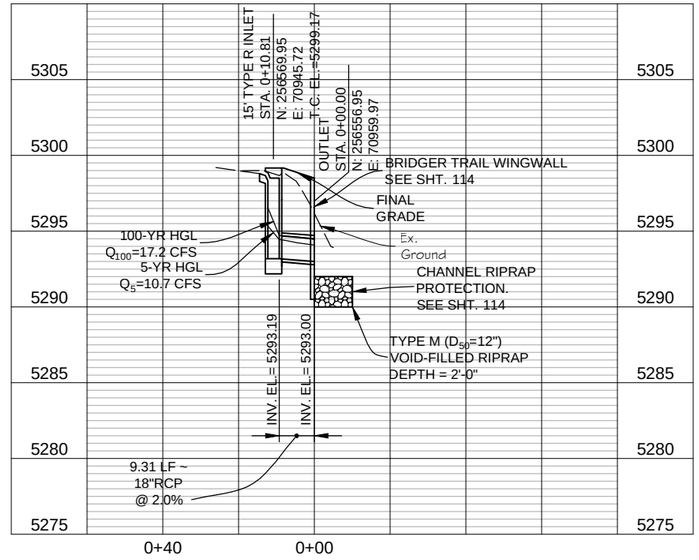

STORM LINE 14A
SCALE: HORIZ. 1" = 40'
VERT. 1" = 10'

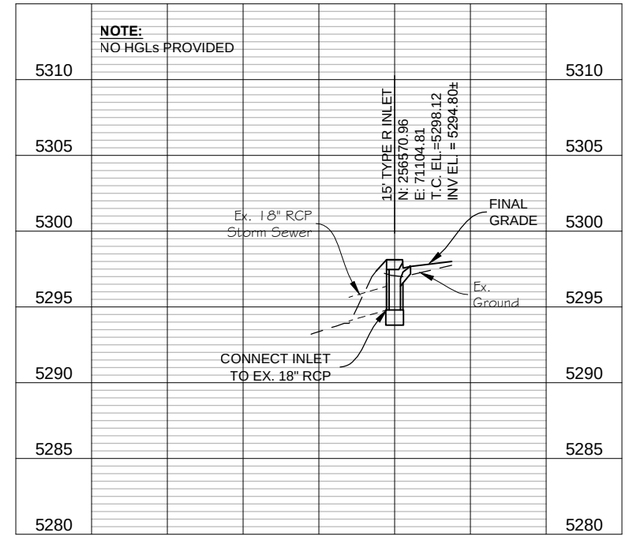

STORM LINE 14B
SCALE: HORIZ. 1" = 40'
VERT. 1" = 10'

PLOTTED: 6/19/2015 11:14:39 AM
NAME: P:\11-039.03 WONDERLAND CREEK LOWER REACH -FINAL DESIGN\CAD\11-039.03_UTIL-STORM PROFILE.DWG

Computer File Information		
Creation Date: 12/31/13	Initials: JHK	
Last Modification Date: 06/18/15	Initials: JHK	
Full Path: P:\11-039.03\CAD		
Drawing File Name: 11-039.03_UTIL-STORM Profile.dwg		
AutoCAD 2014	Scale: AS SHOWN	

MULLER ENGINEERING CO., INC.
MULLER
CONSULTING ENGINEERS
777 S. WADSWORTH BLVD. 4-100
LAKEWOOD, COLORADO 80226
(303) 988-4939
MEC PROJECT NO. 11039.03

COLORADO REGISTERED PROFESSIONAL ENGINEER CHRISTOPHER L. KRIEGER 37254 6/18/15

Sheet Revisions		
Date:	Comments	Init.

As Constructed
No Revisions:
Revised:
Void:

GREAT DENVER AREA FLOOD CONTROL DISTRICT
CDOT CO Region 4 RDM
CITY OF BOULDER

WONDERLAND CREEK - GREENWAYS IMPROVEMENT PROJECT
STORM SEWER PROFILES

Designer:	MKN	Structure Numbers	
Detailer:	JHK		
Sheet Subset:	UTILITY	Subset Sheets:	ST-4

Project No./Code
STM 110-081
18405
Sheet Number: 204

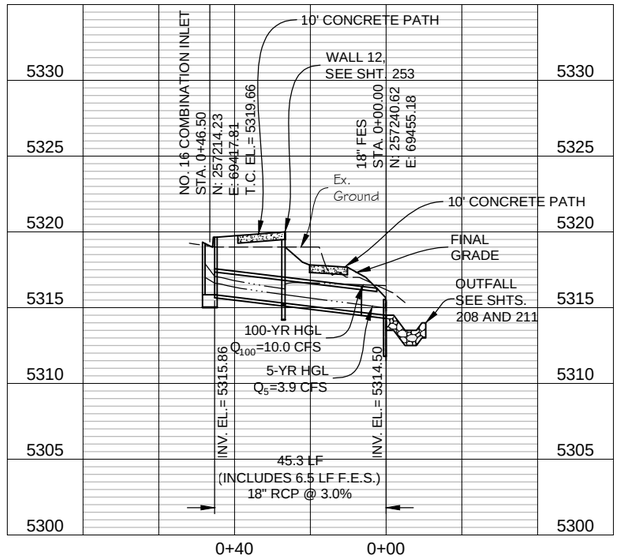

STORM LINE 15

SCALE: HORIZ. 1" = 40'
VERT. 1" = 10'

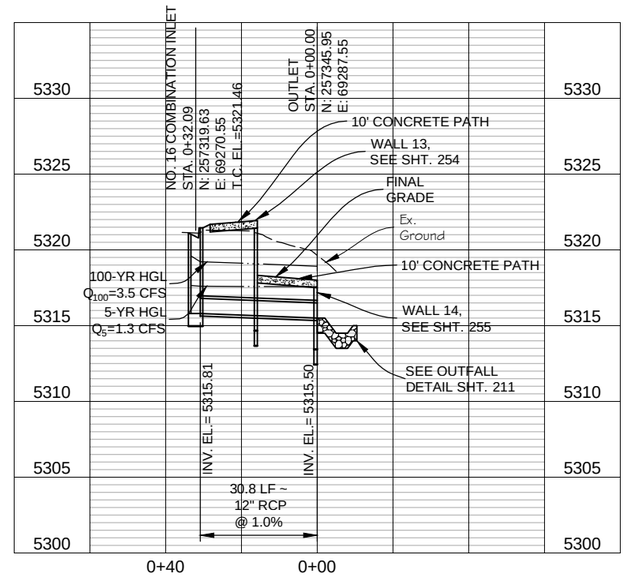

STORM LINE 16

SCALE: HORIZ. 1" = 40'
VERT. 1" = 10'

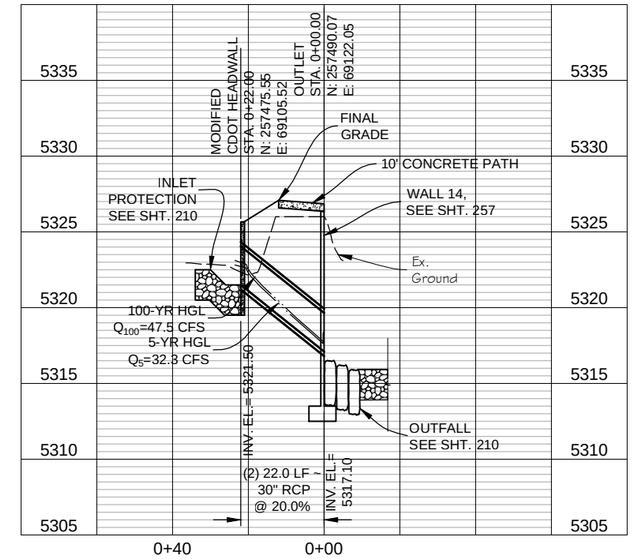

STORM LINE 17

SCALE: HORIZ. 1" = 40'
VERT. 1" = 10'

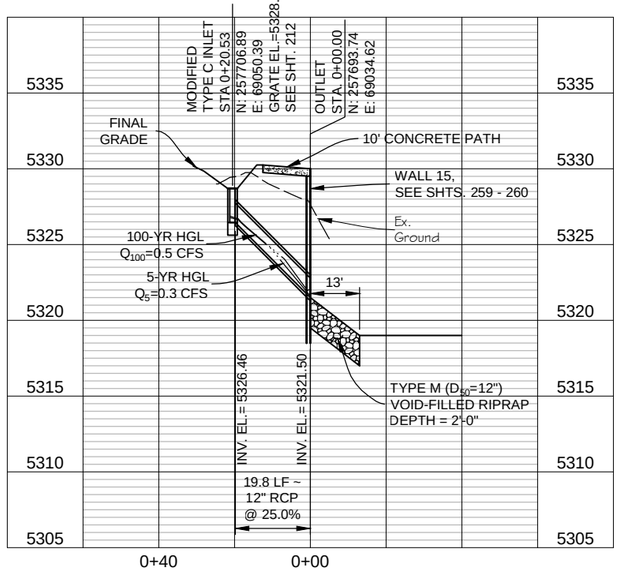

STORM LINE 18

SCALE: HORIZ. 1" = 40'
VERT. 1" = 10'

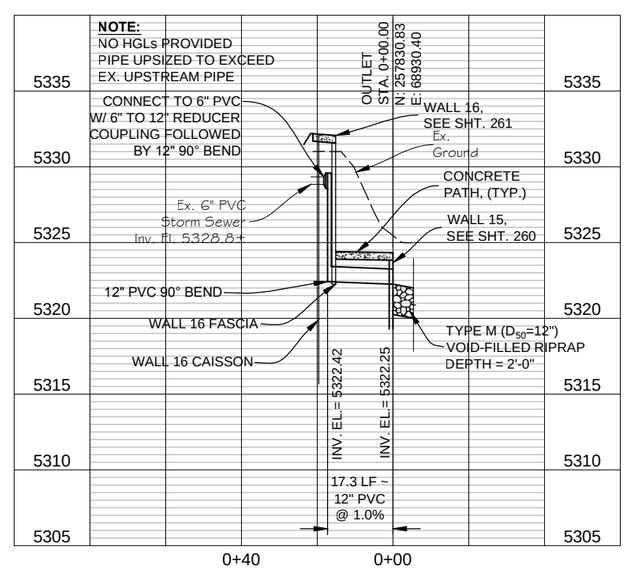

STORM LINE 19

SCALE: HORIZ. 1" = 40'
VERT. 1" = 10'

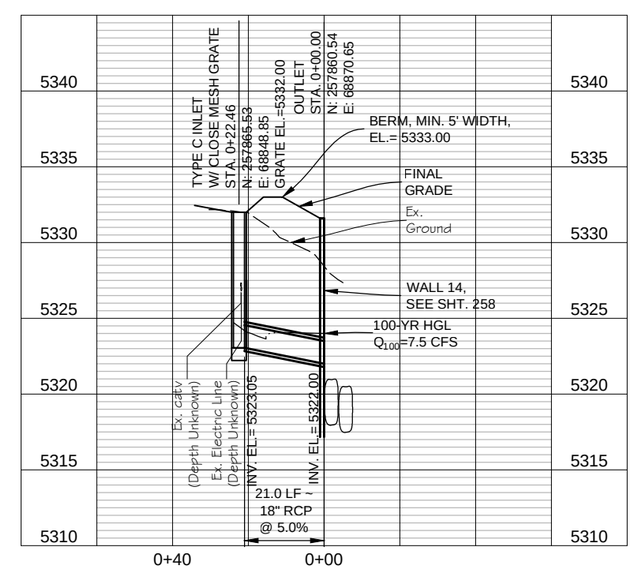

STORM LINE 20

SCALE: HORIZ. 1" = 40'
VERT. 1" = 10'

PLOTTED: 6/19/2015 11:14:50 AM
NAME: P:\11-039.03 WONDERLAND CREEK LOWER REACH -FINAL DESIGN\CAD\11-039.03_UTIL-STORM PROFILE.DWG

Computer File Information		
Creation Date: 12/31/13		Initials: JHK
Last Modification Date: 06/18/15		Initials: JHK
Full Path: P:\11-039.03\CAD		
Drawing File Name: 11-039.03_UTIL-STORM Profile.dwg		
AutoCAD 2014	Scale: AS SHOWN	

MULLER ENGINEERING CO., INC.
CONSULTING ENGINEERS
777 S. WADSWORTH BLVD. 4-100
LAKEWOOD, COLORADO 80226
(303) 988-4939
MULLER
MEC PROJECT NO. 11039.03

COLORADO REGISTERED PROFESSIONAL ENGINEER CHRISTOPHER L. KRAGENBRINK 37254 6/18/15

Sheet Revisions		
Date:	Comments	Init.

As Constructed
No Revisions:
Revised:
Void:

UNITED DRAINAGE AND FLOOD CONTROL DISTRICT
CDOT Region 4 RDM
CITY OF BOULDER

WONDERLAND CREEK - GREENWAYS IMPROVEMENT PROJECT
STORM SEWER PROFILES

Designer:	MKN	Structure Numbers	
Detailer:	JHK		
Sheet Subset:	UTILITY	Subset Sheets:	ST-5

Project No./Code
STM 110-081
18405
Sheet Number: 205

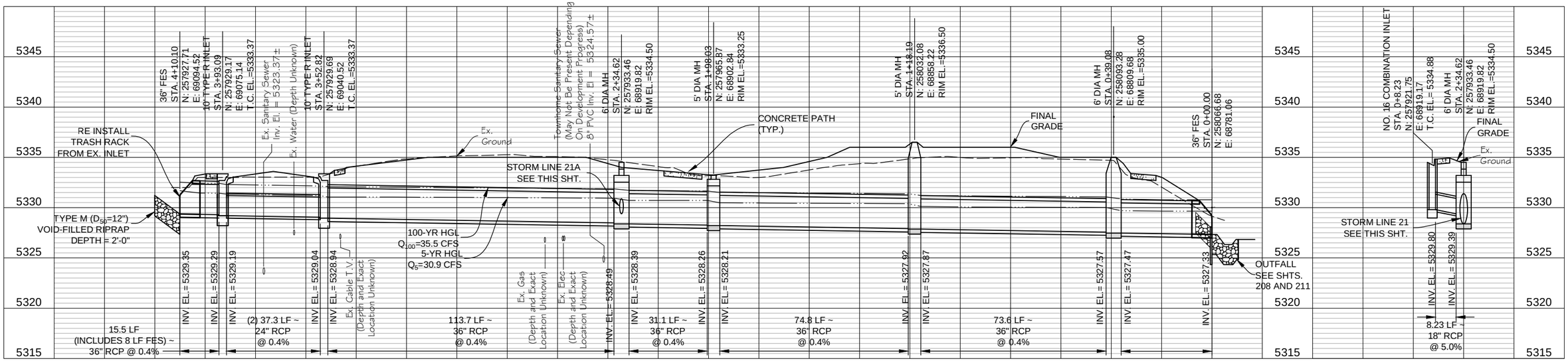

STORM LINE 21

SCALE: HORIZ. 1" = 40'
VERT. 1" = 10'

STORM LINE 21A

SCALE: HORIZ. 1" = 40'
VERT. 1" = 10'

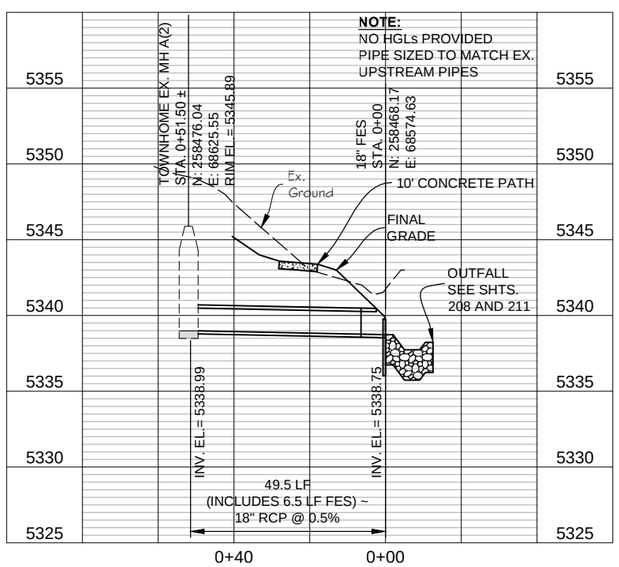

STORM LINE 22

SCALE: HORIZ. 1" = 40'
VERT. 1" = 10'

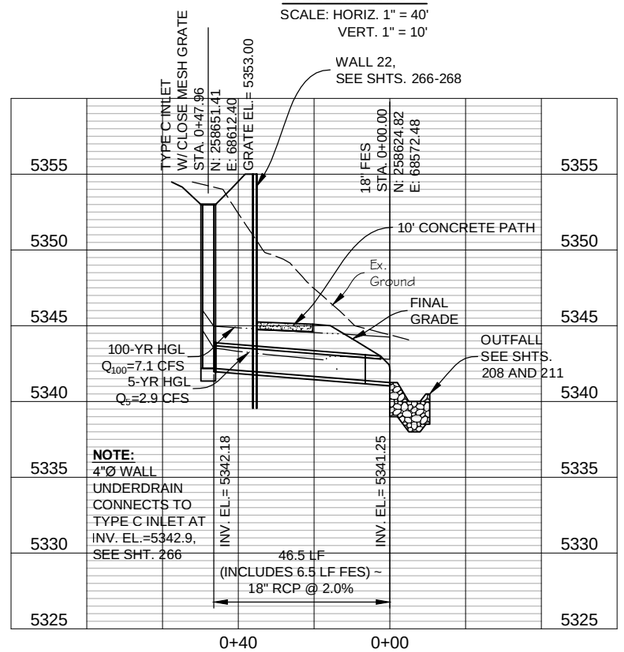

STORM LINE 23

SCALE: HORIZ. 1" = 40'
VERT. 1" = 10'

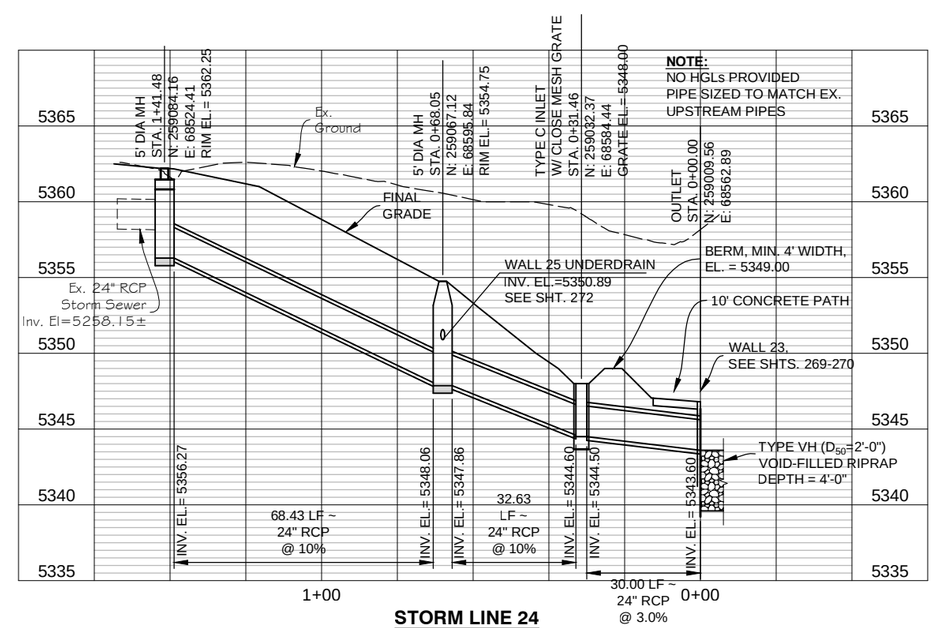

STORM LINE 24

SCALE: HORIZ. 1" = 40'
VERT. 1" = 10'

Computer File Information		
Creation Date: 12/31/13	Initials: JHK	
Last Modification Date: 06/18/15	Initials: JHK	
Full Path: P:\11-039.03\CAD		
Drawing File Name: 11-039.03_UTIL-STORM Profile.dwg		
AutoCAD 2014	Scale: AS SHOWN	

MULLER ENGINEERING CO., INC.
CONSULTING ENGINEERS
777 S. WADSWORTH BLVD. 4-100
LAKEWOOD, COLORADO 80226
(303) 988-4939
MULLER
MEC PROJECT NO. 11039.03

COLORADO REGISTERED PROFESSIONAL ENGINEER
CHRISTOPHER L. KREBBEKX
37254
6/18/15

Sheet Revisions		
Date:	Comments	Init.

As Constructed
No Revisions:
Revised:
Void:

URBAN DRAINAGE AND FLOOD CONTROL DISTRICT
CO CDOT Region 4 RDM
CITY OF BOULDER

WONDERLAND CREEK - GREENWAYS IMPROVEMENT PROJECT
STORM SEWER PROFILES

Designer:	JW3	Structure Numbers	
Detailer:	JHK		
Sheet Subset:	UTILITY	Subset Sheets:	ST-6

Project No./Code
STM 110-081
18405
Sheet Number: 206

PLOTTED: 6/19/2015 11:15:04 AM
NAME: P:\11-039.03 WONDERLAND CREEK LOWER REACH -FINAL DESIGN\CAD\11-039.03_UTIL-STORM PROFILE.DWG

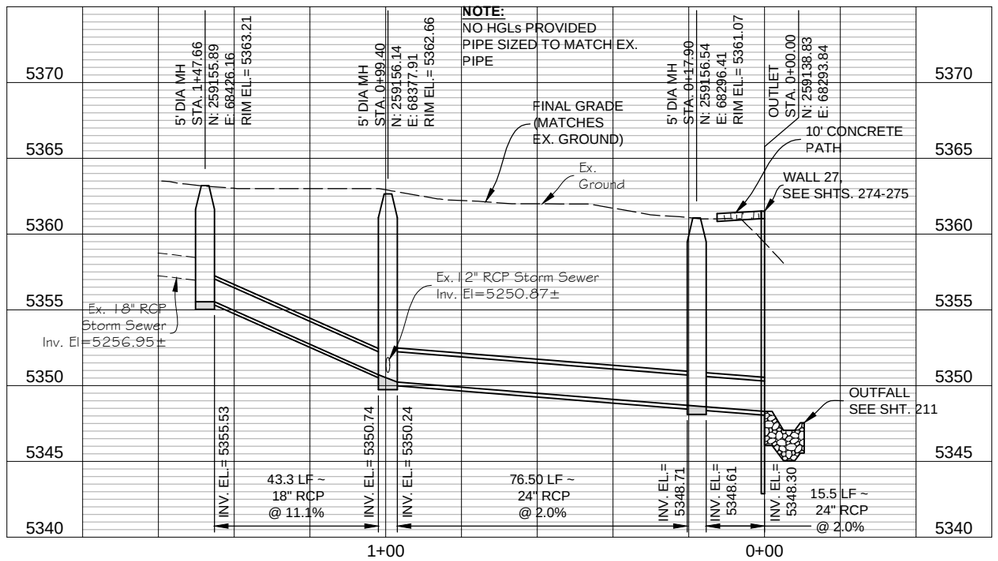

STORM LINE 25

SCALE: HORIZ. 1" = 40'
VERT. 1" = 10'

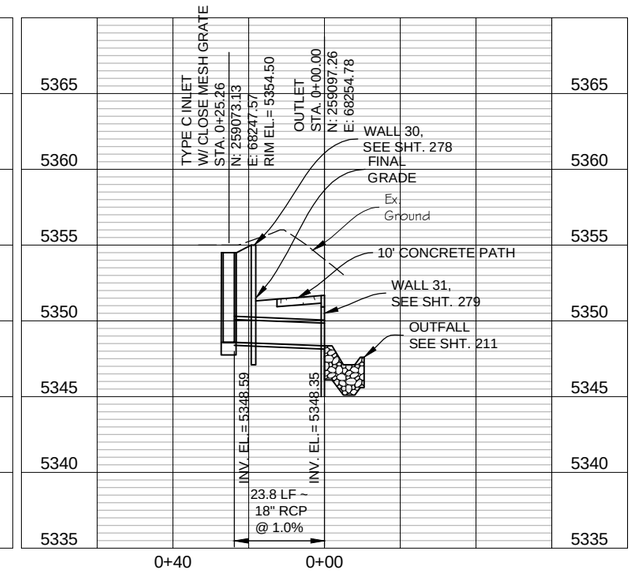

STORM LINE 26

SCALE: HORIZ. 1" = 40'
VERT. 1" = 10'

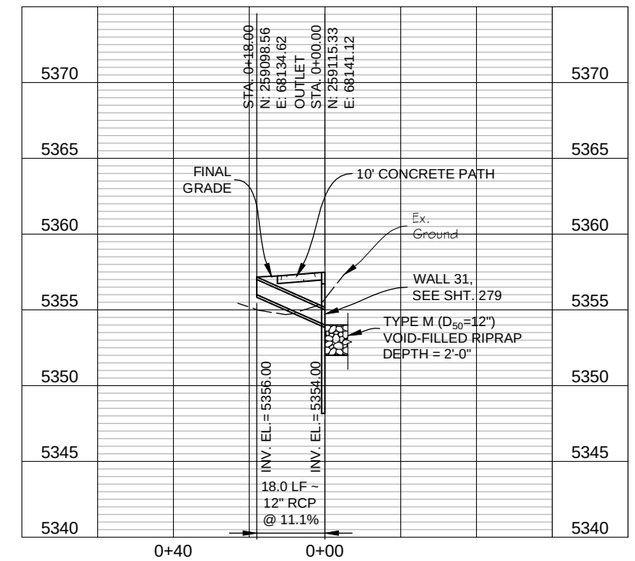

STORM LINE 27

SCALE: HORIZ. 1" = 40'
VERT. 1" = 10'

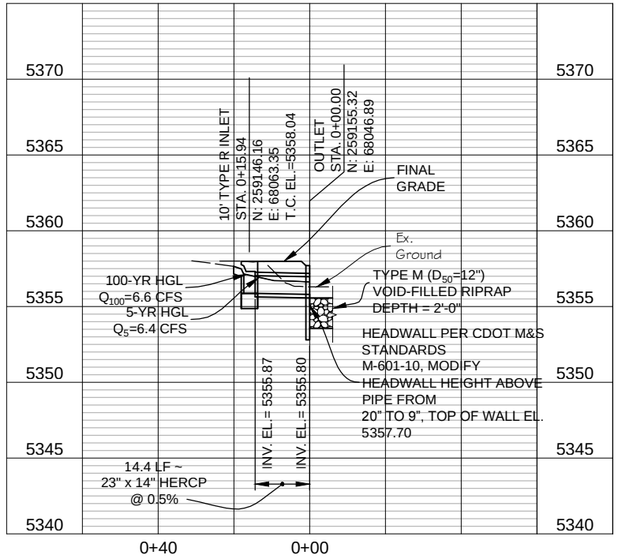

STORM LINE 28

SCALE: HORIZ. 1" = 20'
VERT. 1" = 5'

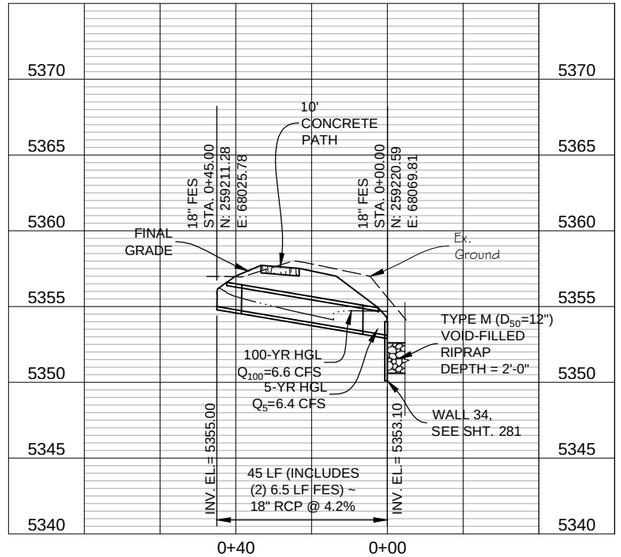

STORM LINE 29

SCALE: HORIZ. 1" = 20'
VERT. 1" = 5'

PLOTTED: 6/19/2015 11:15:15 AM
NAME: P:\11-039.03 WONDERLAND CREEK LOWER REACH -FINAL DESIGN\CAD\11-039.03_UTIL-STORM PROFILE.DWG

Computer File Information		
Creation Date: 12/31/13	Initials: JHK	
Last Modification Date: 06/18/15	Initials: JHK	
Full Path: P:\11-039.03\CAD		
Drawing File Name: 11-039.03_UTIL-STORM Profile.dwg		
AutoCAD 2014	Scale: AS SHOWN	

MULLER ENGINEERING CO., INC.
CONSULTING ENGINEERS
777 S. WADSWORTH BLVD. 4-100
LAKEWOOD, COLORADO 80226
(303) 988-4939
MULLER
MEC PROJECT NO. 11039.03

COLORADO REGISTERED PROFESSIONAL ENGINEER CHRISTOPHER L. KREGER 37254 6/18/15

Sheet Revisions		
Date:	Comments	Init.

As Constructed
No Revisions:
Revised:
Void:

DRAINAGE AND FLOOD CONTROL DISTRICT
CDOT Region 4 RDM
CITY OF BOULDER

WONDERLAND CREEK - GREENWAYS IMPROVEMENT PROJECT
STORM SEWER PROFILES

Designer:	JW3	Structure Numbers	
Detailer:	JHK		
Sheet Subset:	UTILITY	Subset Sheets:	ST-7

Project No./Code
STM 110-081
18405
Sheet Number: 207

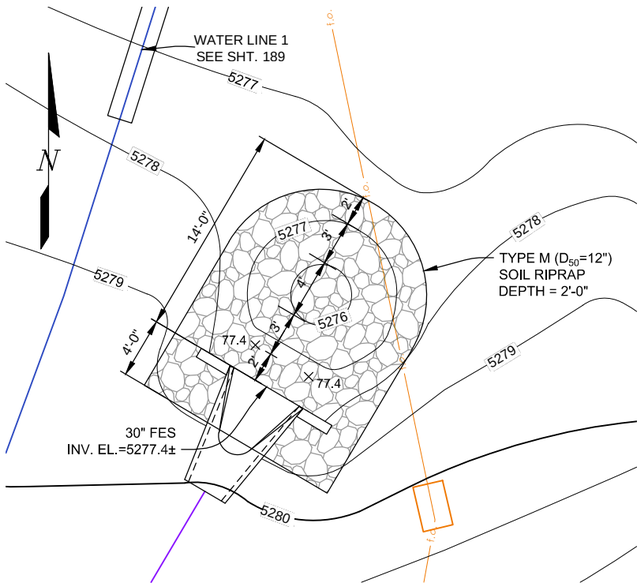

STORM LINE 1 OUTFALL PLAN

0' 2.5' 5' 10'

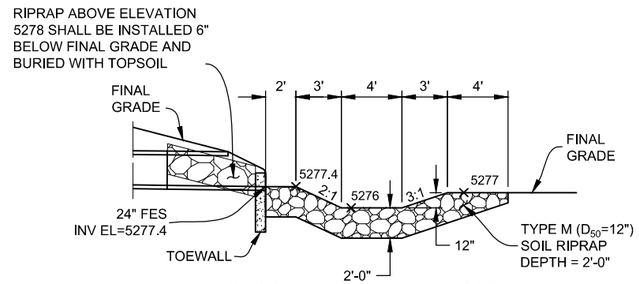

STORM LINE 1 OUTFALL PROFILE

0' 2.5' 5' 10'

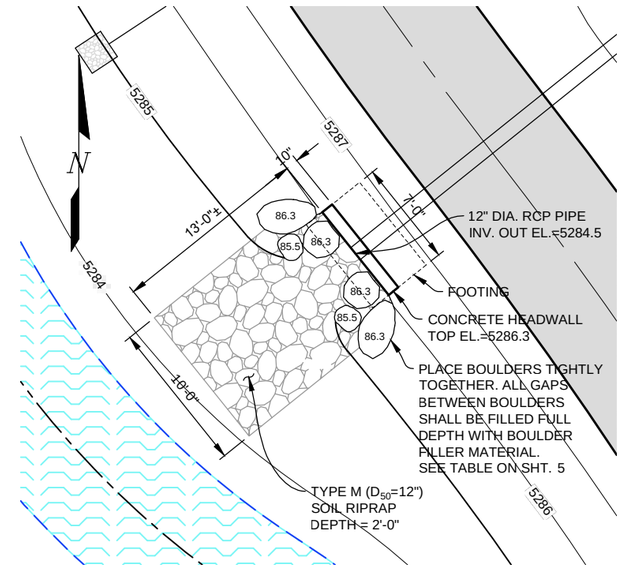

STORM LINE 5 OUTFALL PLAN

0' 2.5' 5' 10'

TOE WALL CONTROL TABLE

LOCATION	FES INV.	TOP OF WALL	BOTTOM OF WALL	LENGTH	HEIGHT
STORM LINE 1	5277.40	5277.94	5274.40	8'-0"	3'-6-1/2"
STORM LINE 8	5293.80	5294.55	5290.80	7'-0"	3'-9"
STORM LINE 15	5314.50	5315.25	5311.50	8'-0"	3'-9"
STORM LINE 21	5327.35	5328.85	5324.35	12'-6"	4'-6"
STORM LINE 22	5338.75	5339.50	5335.75	8'-0"	3'-9"
STORM LINE 23	5341.25	5342.00	5338.25	8'-0"	3'-9"

NOTES:

1. ALL POINT ELEVATIONS AND CONTOURS ARE FINISH GROUND.
2. JOINT FASTENERS (2) ARE REQUIRED ON END SECTIONS AND THE FIRST JOINT UPSTREAM. SEE CDOT M&S STANDARDS M603-10 FOR DETAILS.

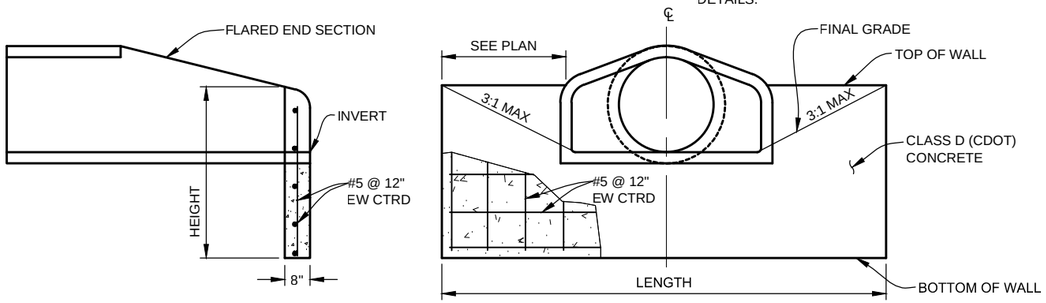

TOE WALL DETAIL

N.T.S.

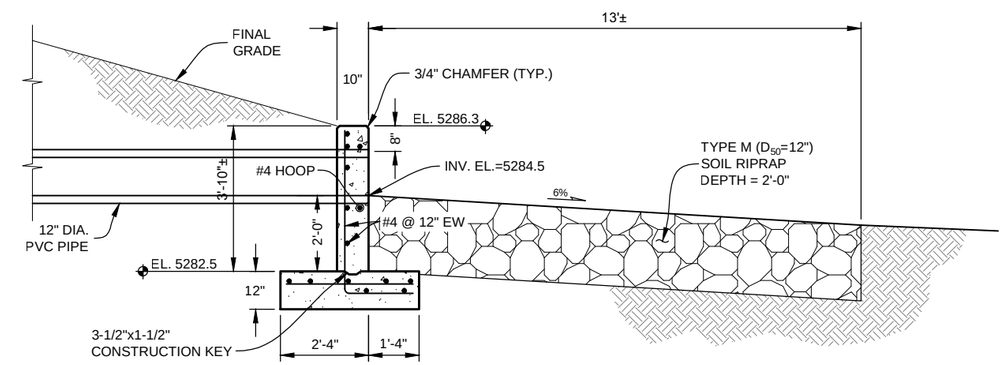

STORM LINE 5 OUTFALL PROFILE

0' 1' 2' 4'

SCALE: 1/4" = 1'-0"

NOTES:

1. BOULDERS NOT SHOWN.
2. 3" CLEAR SHALL BE PROVIDED BETWEEN REBAR AND BOTTOM OF FOOTING.
3. 2" CLEAR SHALL BE PROVIDED BETWEEN REBAR AND TOP / SIDES OF FOOTING.

PLOTTED: 6/19/2015 11:16:43 AM
NAME: P:\11-039.03 WONDERLAND CREEK LOWER REACH -FINAL DESIGN\CAD\11-039.03_STM OUTFALL.DWG

Computer File Information		
Creation Date: 09/24/14	Initials: JHK	
Last Modification Date: 06/18/15	Initials: JHK	
Full Path: P:\11-039.03\WONDERLAND\CAD		
Drawing File Name: 11-039.03_STM OUTFALL.dwg		
AutoCAD 2014	Scale: AS SHOWN	

MULLER ENGINEERING CO., INC.
CONSULTING ENGINEERS
777 S. WADSWORTH BLVD. 4-100
LAKEWOOD, COLORADO 80226
(303) 988-4939
MULLER
MEC PROJECT NO. 11039.03

COLORADO REGISTERED PROFESSIONAL ENGINEER CHRISTOPHER L. KRAGER 37254 6/18/15

Sheet Revisions		
Date:	Comments	Init.

As Constructed
No Revisions:
Revised:
Void:

Region 4 RDM

CITY OF BOULDER

WONDERLAND CREEK - GREENWAYS IMPROVEMENT PROJECT

STORM SEWER OUTFALL DETAILS

Designer:	CLK	Structure Numbers	
Detailer:	JHK		
Sheet Subset:	UTILITY	Subset Sheets:	ST-8

Project No./Code
STM 110-081
18405
Sheet Number: 208

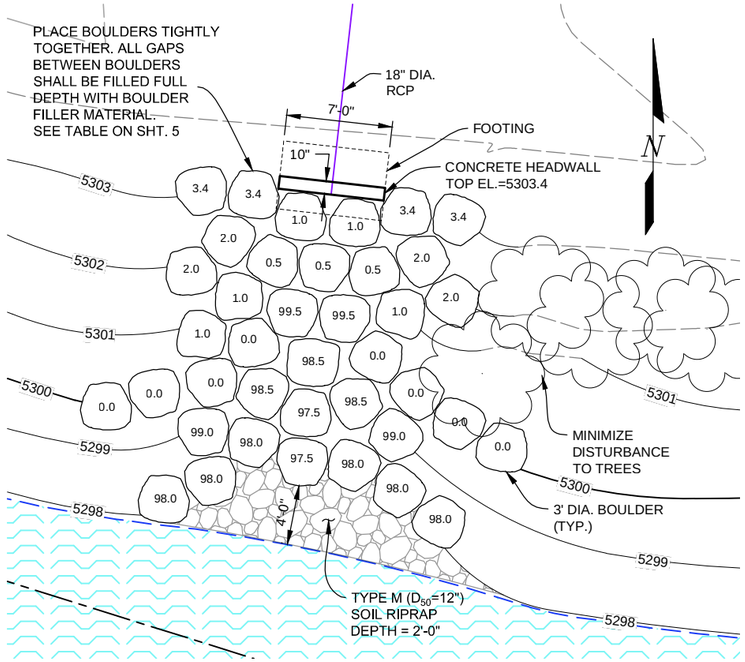

STORM LINE 13 OUTFALL PLAN

0' 2.5' 5' 10'

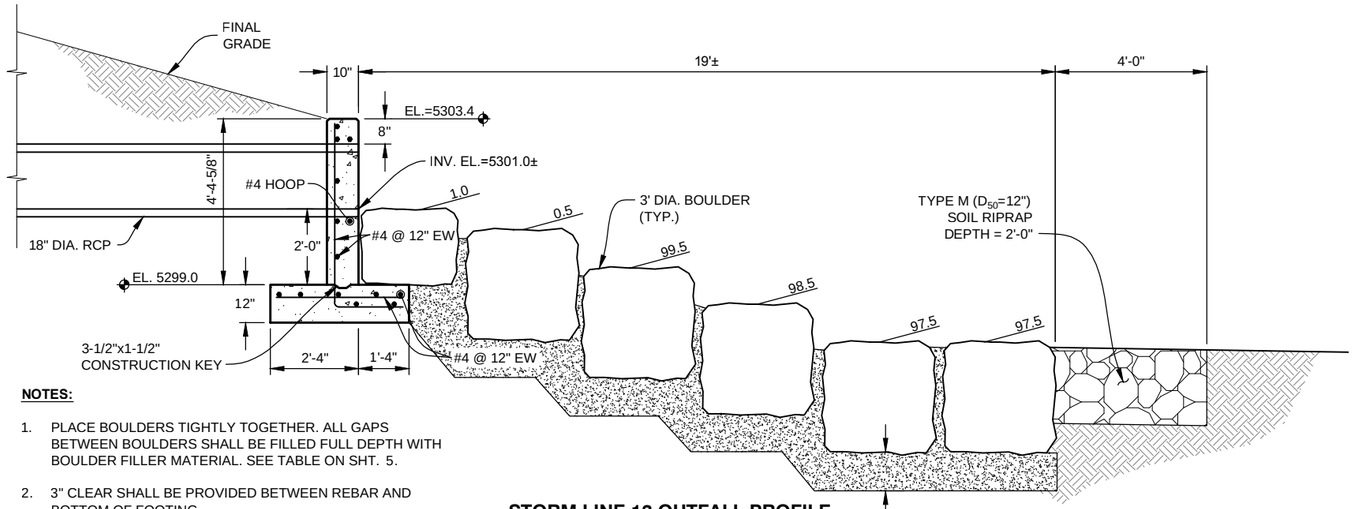

STORM LINE 13 OUTFALL PROFILE

0' 1' 2' 4'

SCALE: 1/4" = 1'-0"

NOTES:

1. PLACE BOULDERS TIGHTLY TOGETHER. ALL GAPS BETWEEN BOULDERS SHALL BE FILLED FULL DEPTH WITH BOULDER FILLER MATERIAL. SEE TABLE ON SHT. 5.
2. 3" CLEAR SHALL BE PROVIDED BETWEEN REBAR AND BOTTOM OF FOOTING.
3. 2" CLEAR SHALL BE PROVIDED BETWEEN REBAR AND TOP / SIDES OF FOOTING.

Computer File Information		
Creation Date: 09/24/14	Initials: JHK	
Last Modification Date: 06/18/15	Initials: JHK	
Full Path: P:\11-039.03\WONDERLAND\CAD		
Drawing File Name: 11-039.03_STM OUTFALL.dwg		
AutoCAD 2014	Scale: AS SHOWN	

MULLER ENGINEERING CO., INC.
CONSULTING ENGINEERS
777 S. WADSWORTH BLVD. 4-100
LAKEWOOD, COLORADO 80226
(303) 988-4939

MULLER

MEC PROJECT NO. 11039.03

COLORADO REGISTERED CHRISTOPHER L. KRIEGER 37254 6/18/15 PROFESSIONAL ENGINEER

Sheet Revisions		
Date:	Comments	Init.

As Constructed

No Revisions:

Revised:

Void:

Region 4 RDM

CITY OF BOULDER

WONDERLAND CREEK - GREENWAYS IMPROVEMENT PROJECT

STORM SEWER OUTFALL DETAILS (CONT.)

Designer:	CLK	Structure Numbers	
Detailer:	JHK		
Sheet Subset:	UTILITY	Subset Sheets:	ST-9

Project No./Code

STM 110-081

18405

Sheet Number: 209

PLOTTED: 6/19/2015 11:17:00 AM
NAME: P:\11-039.03 WONDERLAND CREEK LOWER REACH -FINAL DESIGN\CAD\11-039.03_STM OUTFALL.DWG

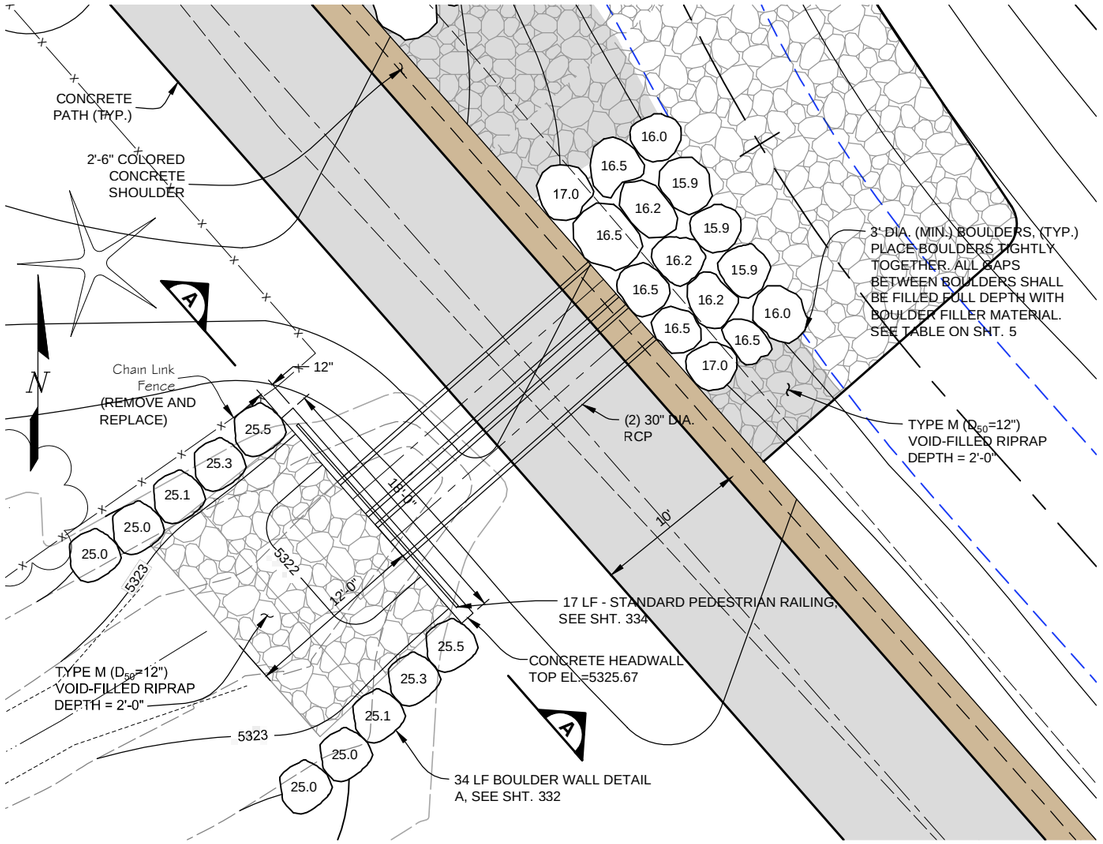

STORM LINE 17 OUTFALL PLAN

0' 2.5' 5' 10'

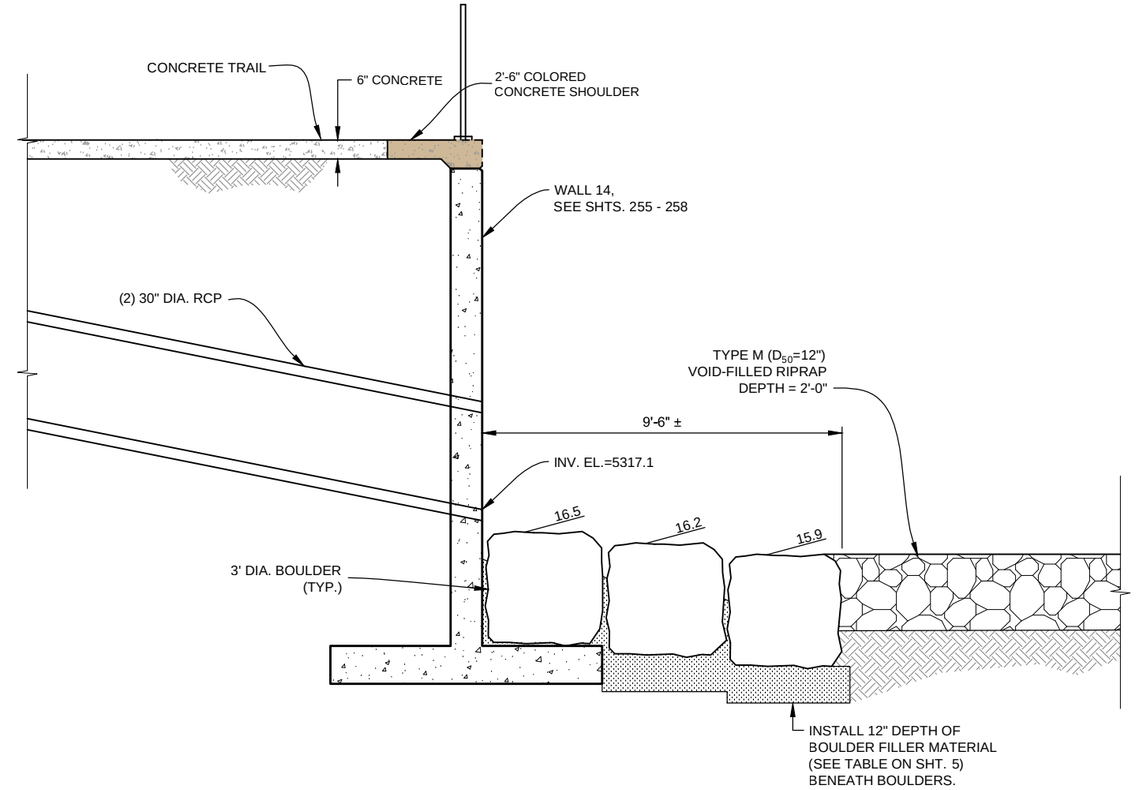

STORM LINE 17 OUTFALL PROFILE

0' 1' 2' 4'

SCALE: 1/4" = 1'-0"

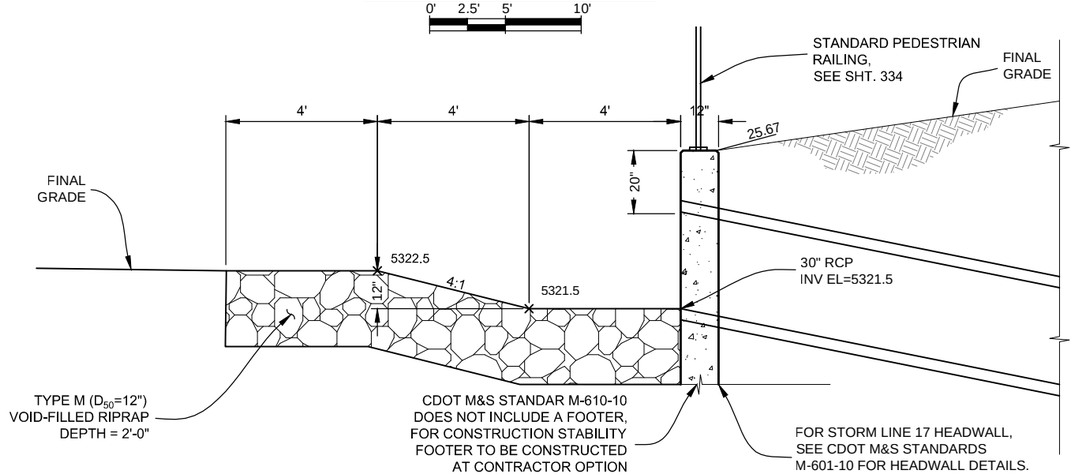

STORM LINE 17 INLET PROFILE

0' 1' 2' 4'

SCALE: 1/4" = 1'-0"

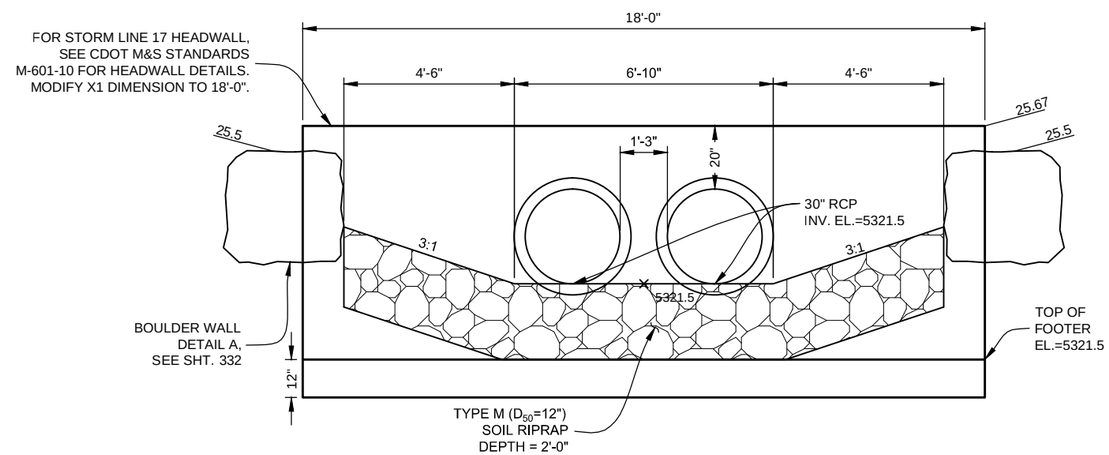

INLET SECTION A

0' 1' 2' 4'

SCALE: 1/4" = 1'-0"

Computer File Information			
Creation Date: 09/24/14	Initials: JHK		
Last Modification Date: 06/18/15	Initials: JHK		
Full Path: P:\11-039.03\WONDERLAND\CAD			
Drawing File Name: 11-039.03_STM OUTFALL.dwg			
AutoCAD 2014	Scale: AS SHOWN		

MULLER ENGINEERING CO., INC.
CONSULTING ENGINEERS
777 S. WADSWORTH BLVD. 4-100
LAKEWOOD, COLORADO 80226
(303) 988-4939

MULLER

MEC PROJECT NO. 11039.03

COLORADO REGISTERED PROFESSIONAL ENGINEER CHRISTOPHER L. KREGER 37254 6/18/15

Sheet Revisions		
Date:	Comments	Init.

As Constructed

No Revisions:

Revised:

Void:

Region 4 RDM

CITY OF BOULDER

WONDERLAND CREEK - GREENWAYS IMPROVEMENT PROJECT

STORM SEWER OUTFALL DETAILS (CONT.)

Designer:	MKN	Structure Numbers	
Detailer:	JHK		
Sheet Subset:	UTILITY	Subset Sheets:	ST-10

Project No./Code

STM 110-081

18405

Sheet Number: 210

PLOTTED: 6/19/2015 11:17:28 AM
NAME: P:\11-039.03 WONDERLAND CREEK LOWER REACH -FINAL DESIGN\CAD\11-039.03_STM OUTFALL.DWG

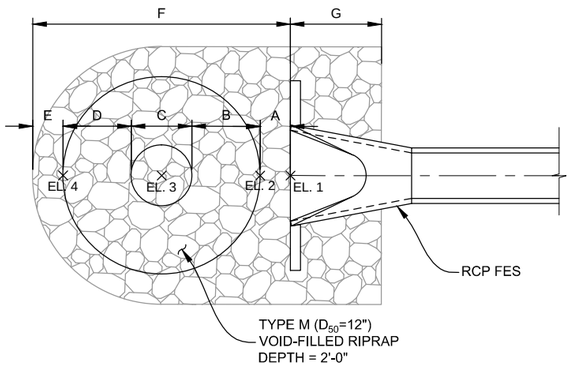

OUTFALL TYPE 1 PLAN

0' 2.5' 5' 10'

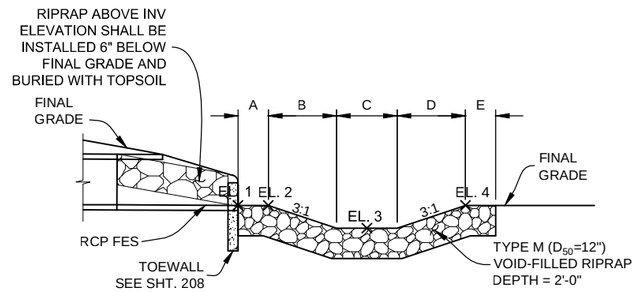

OUTFALL TYPE 1 PROFILE

0' 2.5' 5' 10'

OUTFALL TYPE 1 TABLE

LOCATION	PIPE SIZE	EL. 1	EL. 2	EL. 3	EL. 4	A	B	C	D	E	F	G
STORM LINE 15	18" RCP	5314.50	5314.50	5313.50	5314.00	2'-0"	3'-0"	3'-0"	1'-6"	1'-0"	10'-6"	3'-0"
STORM LINE 21	36" RCP	5327.35	5327.35	5325.85	5327.35	2'-0"	4'-6"	3'-0"	4'-6"	2'-0"	17'-0"	6'-0"
STORM LINE 22	18" RCP	5338.75	5338.75	5337.75	5338.25	2'-0"	3'-0"	4'-0"	1'-6"	2'-0"	12'-6"	4'-0"
STORM LINE 23	18" RCP	5341.25	5341.25	5340.25	5340.75	2'-0"	3'-0"	3'-0"	1'-6"	1'-0"	10'-6"	3'-0"

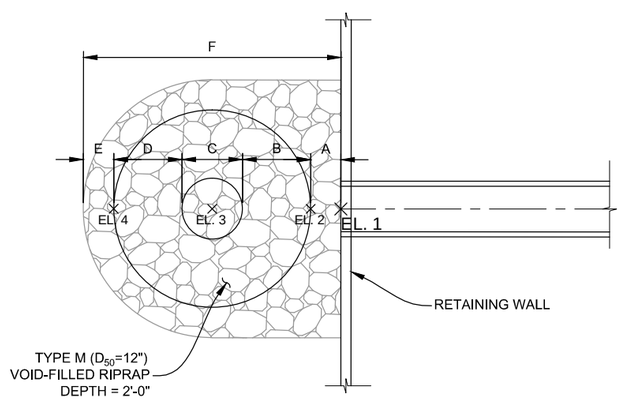

OUTFALL TYPE 2 PLAN

0' 2.5' 5' 10'

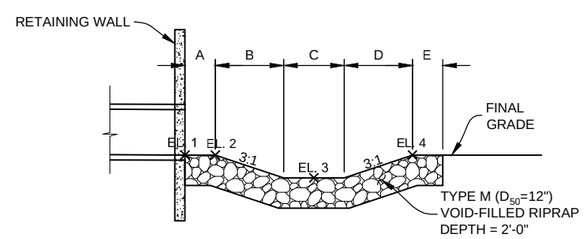

OUTFALL TYPE 2 PROFILE

0' 2.5' 5' 10'

OUTFALL TYPE 2 TABLE

LOCATION	PIPE SIZE	EL. 1	EL. 2	EL. 3	EL. 4	A	B	C	D	E	F
STORM LINE 16	12" RCP	5315.50	5315.50	5314.50	5315.00	2'-0"	3'-0"	3'-0"	1'-6"	1'-0"	10'-6"
STORM LINE 25	24" RCP	5348.30	5348.30	5346.80	5347.30	2'-0"	4'-6"	4'-0"	1'-6"	2'-0"	14'-0"
STORM LINE 26	18" RCP	5348.35	5348.35	5347.10	5347.35	1'-0"	3'-9"	3'-0"	0'-9"	1'-0"	9'-6"

PLOTTED: 6/19/2015 11:18:02 AM
NAME: P:\11-039.03 WONDERLAND CREEK LOWER REACH -FINAL DESIGN\CAD\11-039.03_STM OUTFALL.DWG

Computer File Information	
Creation Date: 09/24/14	Initials: JHK
Last Modification Date: 06/18/15	Initials: JHK
Full Path: P:\11-039.03\WONDERLAND\CAD	
Drawing File Name: 11-039.03_STM OUTFALL.dwg	
AutoCAD 2014	Scale: AS SHOWN

MULLER ENGINEERING CO., INC.
CONSULTING ENGINEERS
777 S. WADSWORTH BLVD. 4-100
LAKEWOOD, COLORADO 80226
(303) 988-4939
MULLER
MEC PROJECT NO. 11039.03

COLORADO REGISTERED PROFESSIONAL ENGINEER CHRISTOPHER L. KREGER 37254 6/18/15

Sheet Revisions		
Date:	Comments	Init.

As Constructed
No Revisions:
Revised:
Void:

Region 4 RDM

CITY OF BOULDER

WONDERLAND CREEK - GREENWAYS IMPROVEMENT PROJECT
STORM SEWER OUTFALL DETAILS (CONT.)

Designer:	MKN	Structure Numbers	
Detailer:	JHK		
Sheet Subset:	UTILITY	Subset Sheets:	ST-11

Project No./Code
STM 110-081
18405
Sheet Number: 211

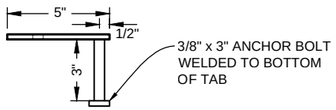

TAB SECTION
SCALE: 1/8" = 1"

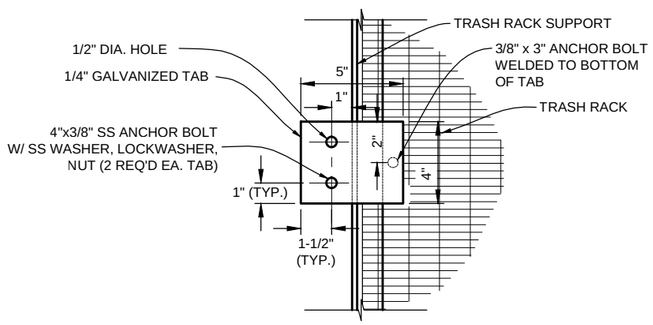

TRASH RACK RESTRAINT DETAIL
SCALE: 1/8" = 1"

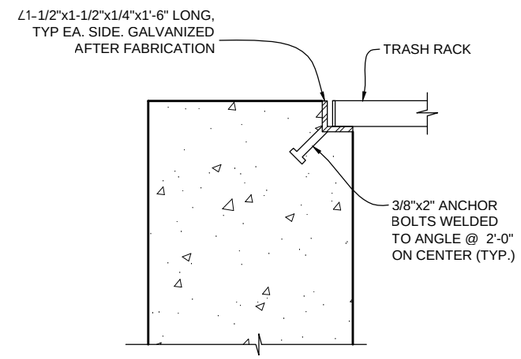

TRASH RACK SUPPORT
SCALE: 1/8" = 1"

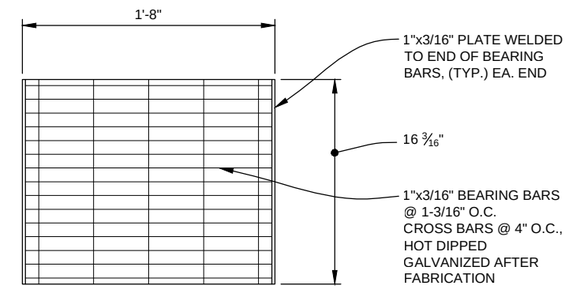

TRASH RACK A
SCALE: 1" = 1'-0"

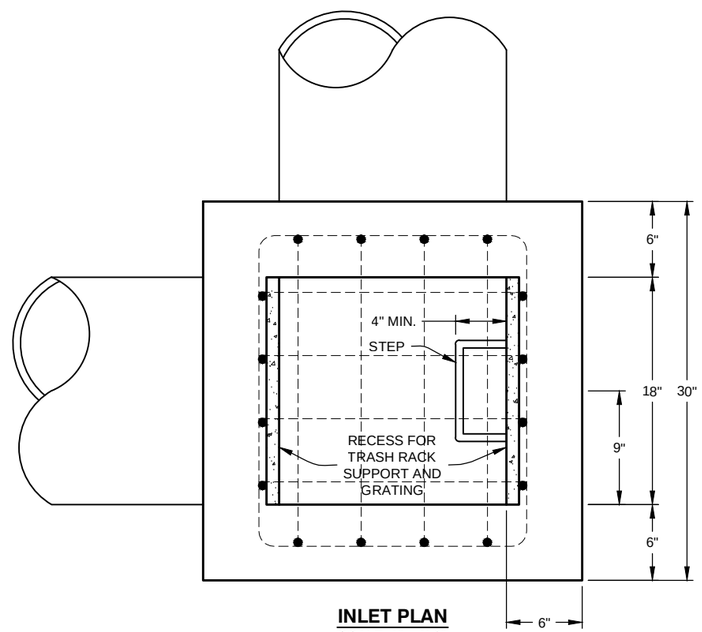

INLET PLAN
SCALE: 1" = 1'-0"

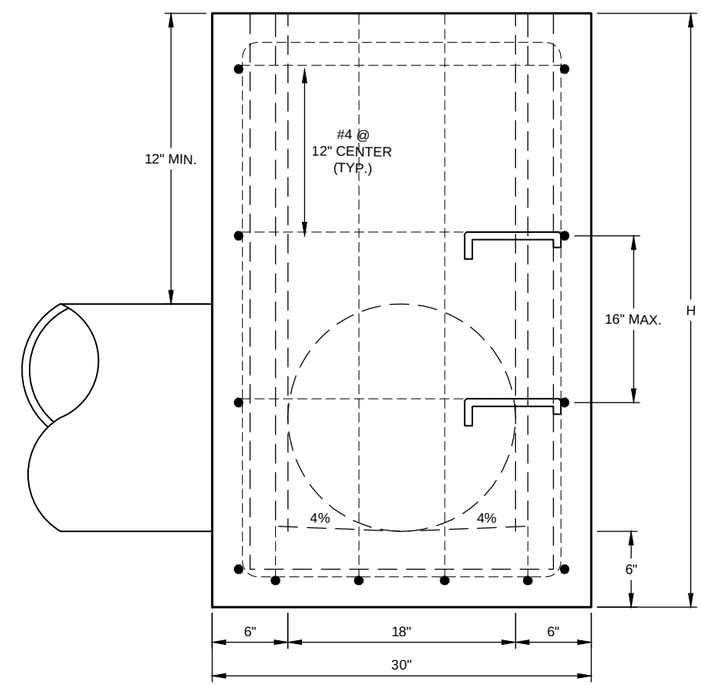

INLET ELEVATION
SCALE: 1" = 1'-0"

GENERAL NOTES:

1. CONCRETE SHALL BE CLASS D.
2. INLET MAY BE CAST-IN-PLACE OR PRECAST.
3. REINFORCING BARS SHALL BE GRADE 60.
4. STEPS SHALL BE PROVIDED WHEN INLET DIMENSION "H" IS EQUAL TO OR GREATER THAN 3'-6", AND SHALL CONFORM TO AASHTO M 199.
5. INSTALL GRATING PANEL TAB RESTRAINTS ON OPPOSITE SIDES OF THE INLET.

Computer File Information			
Creation Date: 09/24/14	Initials: JHK		
Last Modification Date: 06/18/15	Initials: JHK		
Full Path: P:\11-039.03\WONDERLAND\CAD			
Drawing File Name: 11-039.03_STM OUTFALL.dwg			
AutoCAD 2014	Scale: AS SHOWN		

MULLER ENGINEERING CO., INC.
CONSULTING ENGINEERS
777 S. WADSWORTH BLVD. 4-100
LAKEWOOD, COLORADO 80226
(303) 988-4939
MULLER
MEC PROJECT NO. 11039.03

COLORADO REGISTERED PROFESSIONAL ENGINEER CHRISTOPHER L. KREBERT 37254 6/18/15

Sheet Revisions		
Date:	Comments	Init.

As Constructed
No Revisions:
Revised:
Void:

Region 4 RDM

CITY OF BOULDER

WONDERLAND CREEK - GREENWAYS IMPROVEMENT PROJECT

MODIFIED TYPE C INLET DETAIL

Designer:	CLK	Structure Numbers	
Detailer:	JHK		
Sheet Subset:	UTILITY	Subset Sheets:	ST-12

Project No./Code
STM 110-081
18405
Sheet Number: 212

PLOTTED: 6/19/2015 11:18:37 AM
NAME: P:\11-039.03 WONDERLAND CREEK LOWER REACH -FINAL DESIGN\CAD\11-039.03_STM OUTFALL.DWG