Betasso Residuals Handling Study
Final Report

Prepared for

Betasso Water Treatment Facility

Boulder, Colorado

September 29, 2014

Betasso Residuals Handling Study Final Report

Prepared for

Betasso Water Treatment Facility

Boulder, Colorado

September 29, 2014

Brown AND Caldwell

1697 Cole Blvd. Suite 200

Golden, CO 80401

Table of Contents

List of Figures i
List of Tables i
1. Purpose 1-1
2. Existing Performance and Process Optimization 2-1
3. Thickening and Dewatering Alternatives Identification and Screening 3-1
4. Summary of Results for Thickening and Dewatering Pilots 4-1
5. Design Criteria and Building Options 5-1
6. Cost Summaries 6-1
Appendix A: Site Plan and Building Layout A-1
Appendix B: Cost Summaries B-1
Appendix C: BDP Trailer Mounted GBT Proposal C-1
Appendix D: TM1 Existing Performance and Process Optimization D-1
Appendix E: TM2 Thickening and Dewatering Alternatives Identification and Screening. E-1
Appendix F: TM3 Summary of Results for Thickening and Dewatering Pilots F-1

List of Figures

Figure 4-1: Equalization Tank Installed 4-1
Figure 5-1 Process Flow Diagram with Future Mechanical Thickening 5-1

List of Tables

Table 3-1. Evaluation Criteria 3-1
Table 3-2. Thickening Technology Comparison 3-2
Table 3-3. Thickening Alternative Cost Evaluation 3-3
Table 4-1. Piloted Thickening Technology Comparison 4-2
Table 4-2. Thickening Alternative Cost Evaluation 4-2
Table 5-1. Basis of Design Criteria 5-2
Table 5-2. Residuals Thickening Design Criteria 5-2
Table 6-1. Thickening Building Opinion of Probable Project Cost 6-1
Table 6-2. Trailer Mounted GBT Opinion of Probable Project Cost 6-2

Section 1

Purpose

The City of Boulder's (City) Betasso Water Treatment Facility (WTF) is currently limited by its residuals handling capacity. The existing lagoons and drying beds do not have sufficient surface area to dewater residuals produced through current operation of the WTF. In the first phase of this study, existing reports were reviewed and data was analyzed in order to characterize the current residuals production. Current operation of the WTF was compared to industry best practices to identify potential areas for optimization and to maximize the capacity of existing processes. The use of existing lagoons and drying beds has been identified as a priority to minimize capital investment where practical, while also considering future expansion of the WTF. In subsequent phases of the study various thickening and dewatering alternatives were evaluated and finally three thickening technologies were piloted at the Betasso WTF.

The purpose of this report is to provide summaries of the investigation process and findings for Technical Memoranda 1 through 3. The complete tech memos are also included as appendices. Also included in this report are design criteria to be utilized for full scale implementation based on the pilot testing results and projected needs of the Betasso WTF in the future.

Section 2

Existing Performance and Process Optimization

Historical facility performance was analyzed to explore the potential for liquid-stream sedimentation and filtration process optimization on solids handling facilities. The first step in the evaluation was to analyze historical data to establish a baseline for residuals production at the WTF. Next, individual liquid-stream treatment processes were examined to identify opportunities for optimization to reduce solids production and minimize the hydraulic loading to the solids handling facilities. The conclusion of this analysis is that there are limited opportunities for reducing sludge production at the WTF.

The existing lagoons and drying beds were examined to determine their capacity for thickening and dewatering at the WTF. It is suspected that the underdrains in the existing drying beds are not functioning optimally. The lagoons have been lined with concrete and have no underdrain. A further limiting factor is the need to reserve at least one of the lagoons to accommodate sludge from the sedimentation tanks when the lagoons are taken out of service for cleaning and sludge removal. The results of this evaluation indicate that the existing solids handling facilities are inadequately sized to handle current and future sludge production from the WTF. To continue to use the existing lagoon/drying bed system, it would be necessary to reduce the sludge volume by thickening the sludge to at least 4 percent dry solids concentration from the current typical dry solids concentration, which was observed to range between 0.2 to 0.7 percent over the course of this study.

Although the WTF currently undergoes two annual clean-out and hauling events, reducing that to one annual clean-out and hauling event is desirable. Increasing feed solids to 4 percent would allow the existing solids treatment facilities to handle plant flows up to 35 million gallons per day (mgd) with a single annual clean-out and hauling event. As flows increase to a rated capacity of 50 mgd, feed solids concentration would have to increase to 6 percent or more if only one annual clean-out and hauling event is to occur. Feed solids concentrations of 4 percent are easily achievable by most thickening technologies.

Section 3

Thickening and Dewatering Alternatives Identification and Screening

Based on the findings outlined in Section 2, in order to continue to use the drying bed and lagoons and prevent the residuals from impacting the liquid stream, residual solids must be thickened to at least 4 percent to meet current facility needs. To accommodate future facility flows up to 50 mgd, thickening or dewatering to at least 6 percent dry solids will need to be implemented. Recommendations for piloting of thickening alternatives were developed based on typical performance in terms of their percentage of solids capture, thickened sludge concentration, polymer use, equipment footprint, safety, reliability, and personnel needs for operations and maintenance (O&M).

The criteria for which the thickening and dewatering alternatives were evaluated are presented in Table 3-1.

Table 3-1. Evaluation Criteria

Parameter	Value
Operating flow (mgd)	35
Annual average sludge production (lb dry solids/day)	830
Maximum day sludge production (lb/d)	3,400
Minimum day sludge production (lb/d)	240
Expected sludge concentration prior to thickening (%)	0.2
Average operating regime (hours per day)	7
Average operating regime (days per week)	5
Operating days during peak day events	7
Power cost ($/kWh)	0.066
Labor cost ($/hour)	40
Polymer cost ($/lb active)	2.80
Sludge hauling cost ($/gallon)	0.30 [a,b]
Building cost ($/ft^2)	250
Concrete construction cost ($/yd^3)	750
Years	20
Inflation rate (%)	4.0
Interest rate (%)	7.0

a. *Equivalent to $65 per wet ton at 15% dry solids cake concentration.*

b. *Although current costs are lower than $0.30/gal, this value was quoted by one hauling company and could reflect future costs.*

Four thickening alternatives were analyzed and compared: gravity thickeners (GTs), gravity belt thickeners (GBTs), rotary drum thickeners (RDTs), and dissolved-air flotation thickeners (DAFTs). Twelve equipment manufacturers submitted proposals and results of bench-scale testing based on Betasso WTF sludge samples. After evaluating these proposals and bench-testing results, four likely thickening technologies were identified. This information was used to compile Table 3-2, which presents a thickening technology comparison.

Table 3-2. Thickening Technology Comparison

Parameter	Gravity Thickener	Gravity Belt Thickener	Rotary Drum Thickener	Dissolved-Air Flotation Thickener
Strengths	• Low supervision • Low power needs	• Highest thickened sludge concentration • Easy to operate	• Enclosed operation • Small footprint • Similar performance to GBT • Easy to operate	• Provides good buffer to varying solids loads • Plant staff familiar with DAF process
Weaknesses	• Largest footprint • Potential gelling of sludge at high polymer dosages • Both hydraulic and solids loading limited	• Needs regular operator attention	• Limited experience with water plant sludges	• High power needs
Solids capture	90%	95%	95%	95%
Thickened sludge concentration	2.5%	5%	5%	4%
Polymer use, lb active/DT	3	8	8	4
Equipment footprint, ft^2	1,200	130	100	450
Safety	High	High	High	High
Reliability	High	High	High	High
O&M person-hours per 7-hour day	2	4	4	3

A cost evaluation was also completed for each of the thickening alternatives, derived from manufacturers' proposals and calculations based upon proposed loading rates and utility requirements. Capital costs result from the sum of equipment costs and estimated building costs. O&M life-cycle costs for a 20-year period were developed for each equipment alternative and include annual O&M costs, costs for polymer use, power use, and hauling fees. Finally, a 20-year life-cycle cost was generated for each alternative. The comparison of thickening alternative costs is presented in Table 3-3.

Table 3-3. Thickening Alternative Cost Evaluation				
Parameter	Gravity Thickener	Gravity Belt Thickener	Rotary Drum Thickener	Dissolved-Air Flotation Thickener
Total project cost	$3,100,000	$2,400,000	$2,400,000	$3,300,000
Annual O&M cost	$21,000	$42,000	$42,000	$31,300
Annual power cost	$180	$540	$500	$1,900
Annual polymer cost	$1,300	$3,400	$3,400	$1,700
Annual hauling fees	$287,000	$68,000	$68,000	$182,000
Total O&M life-cycle cost	$4,600,000	$1,700,000	$1,700,000	$3,200,000
Total life-cycle cost	$7,700,000	$4,100,000	$4,100,000	$6,500,000

The comparisons in Tables 3-2 and 3-3 were used to provide thickening recommendations. GBTs and RDTs have the lowest life-cycle and capital costs while providing the highest thickened sludge concentrations. While DAFTs do not have low life-cycle or capital costs, they provide adequate thickened sludge concentrations. Additionally, a DAFT process is already in place at the WTF, which may be advantageous. It was recommended that manufacturers of GBTs, RDTs, and DAFTs be invited to perform onsite pilot trials to confirm the performances and the solids and hydraulic loading rates predicted by laboratory testing. GTs were excluded due to their high life-cycle and capital costs as well as their low thickened sludge concentration.

From this evaluation it was determined that a GBT, RDT and DAFT would be the best candidates to pilot at this time. In addition, while mechanical dewatering technologies were evaluated, based on the findings of TM1 and TM2 it was found to be unnecessary to meet near future facility needs and was not considered further throughout the study.

Section 4

Summary of Results for Thickening and Dewatering Pilots

Following the findings described in Section 3, three thickening technologies were selected for pilot testing at the Betasso WTF. The three technologies were a GBT, provided by BDP Industries, an RDT, provided by FKC, and a DAFT, provided by World Water Works (WWW). In addition to the thickening technologies, two of the manufacturers also brought dewatering technologies as part of their pilot trailer. BDP brought a belt filter press in addition to its GBT, and FKC brought a screw press in addition to its RDT. Each manufacturer provided an operator to operate the unit on site during the pilot test.

Figure 4-1: Equalization Tank Installed

All polymers were selected and provided by the pilot manufacturers and were certified to NSF/ANSI Standard 60 – Drinking Water Treatment Chemicals – Health Effects. Throughout piloting the WTF was operated under normal conditions, which meant that residuals were drained from one of the four sedimentation basins daily. In addition, flows were captured from the DAFT and oil/water separator. In total, approximately 11,000 gallons of dilute solids was produced each day and delivered to a fully mixed 18,000-gallon equalization tank. Efforts were made to ensure that the tank contained fresh residuals and that the WTF polymer feed system was not running when filling the tank. The pilot operators performed sampling in accordance with the piloting protocol. Facility staff analyzed samples using their CEM Smart Turbo microwave solids analyzer. Many of the results were checked for accuracy by comparing them to results produced by the manufacturers, as well as a number of samples that were analyzed at the 75th Street WWTF.

A comparison showing piloting performance as well as other evaluation criteria for each of the thickening technologies can be seen in Table 4-1.

Table 4-1. Piloted Thickening Technology Comparison

Parameter	GBT	Screw Press	RDT	DAFT
Strengths [a]	Easy to operate	Enclosed operation	Easy to operate	Easy to operate with varying solids loads
Weaknesses [a]	Does not achieve as high of solids concentrations as screw press	Limited usage as a thickener	Limited usage with alum sludges	High power consumption
Solids capture [b]	>95%	>95%	>92%	>95%
Thickened sludge concentration[b]	6.5%	9.1%	4.5%	3.5%
Polymer dosage (lb/dry ton) [b]	8.2	15.1	14.6	14.7
Safety [a]	High	High	High	High
Reliability [a]	High	High	High	High
Hauled lagoon concentration	>15%	>15%	<6%	<6%

a. *Data from Section 2.*
b. *Data from onsite piloting.*

Table 4-2. Thickening Alternative Cost Evaluation

Parameter	GBT	Screw Press[h]	RDT	DAFT
Estimated total project cost [b]	$2,600,000	$2,600,000	N/A [e]	N/A [e]
Thickening unit capital cost [a,f]	$159,300	$176,000	$64,910	N/A [e]
Total O&M life-cycle cost [d]	$1,861,695	$1,898,355	N/A [e]	N/A [e]
Annual power cost [a]	$1,130	$1,938	$1,135	N/A [e]
Relative annual polymer cost [a]	$3,239	$3,940	$5,792	$5,820
Annual maintenance cost [a,g]	$5,494	$4,400	N/A [e]	N/A [e]
Annual operating cost [c]	$41,600	$41,600	$41,600	$31,200
Annual sludge hauling cost	$72,650	$72,650	$181,625	$181,625

a. *Data supplied by equipment manufacturer.*
b. *See Attachment F for more detail.*
c. *Assuming 5 days per week and $40/hour labor.*
d. *Assuming a 20-year life cycle.*
e. *Because the technology was not found to be a viable solution, the manufacturer elected to not provide cost info.*
f. *Price reflects that of the thickener, floc tank, and polymer system.*
g. *Cost reflects parts and labor required for maintenance.*
h. *Assumes that the Screwpress will be operated to produce 6% solids in order to avoid costly cake pumping*

Based on the results of the piloting it was found that only the GBT and screw press were capable of producing thickened solids concentrations greater than 6 percent, which will meet both near-term thickening needs at a facility output of 35 mgd as well as future output of 50 mgd. While the RDT was effective at producing thickened sludge concentrations greater than 4 percent, it was outperformed by a wide margin by the GBT and screw press. On the other hand, the DAFT, and in particular the thickening beach, performed worse than expected.

When comparing the data on the GBT and screw press it is immediately apparent that the screw press provides superior thickening performance, producing thickened sludge in excess of 9 percent solids. While this superior thickening performance may be a distinct advantage from a sludge volume

standpoint, it also produces some unique challenges. At 9 percent solids the residuals are too thin to be deposited in a roll-off dumpster and hauled. Conversely, the solids concentration limit for liquid pumping to the drying beds is generally around 6 percent. At concentrations beyond 6 percent the sludge begins to lose its Newtonian fluid properties and it begins to behave like a pseudoplastic fluid. While thickened alum sludges tend to pump more easily than waste activated sludge, at 9 percent the sludge has a consistency similar to that of thick pancake batter and cake pumping is typically required. Sludge can be pumped at 9 percent thickness, but typically uses positive-displacement pumps, and pumping distances should be limited to keep pressures down. This adds significant cost and complexity to the thickening system, which in this application will not be offset by the value of having thicker sludge.

Furthermore, this is not a conventional application for a screw press. Screw presses are typically used as a dewatering technology to dewater sludge that has already been thickened. Typical operation of the screw press had to be modified dramatically in order to achieve good results during piloting. Moreover, they have not been commonly used to thicken alum sludge by feeding unthickened sludge directly to the screw press. Due to limited operational history in water treatment facilities, and the unique operation of the screw press that would be required, there are concerns that this technology may not be capable of performing consistently and reliably under normal plant operation. These concerns are escalated when considering the potential for process changes in the future, such as converting to a different coagulant.

When all other qualitative factors are considered, the GBT rises to the top as the recommended thickening technology for the Betasso WTF. Through piloting, the GBT proved that it is capable of meeting sludge concentrations to allow hauling dry solids annually and it has a very similar capital and life-cycle O&M cost to that of the screw press, as seen in Table 4-1. Furthermore, GBTs have a proven track record across the country with thickening a variety of sludges. GBTs are significantly more common than screw presses in both water and wastewater applications. This, combined with the simplicity of operation of the GBT, make the GBT the recommended choice for residuals thickening at the Betasso WTF. The GBT is the preferred technology for achieving The City's goal of having more reserve volume for cleaning out the sedimentation basins as well as allowing it to haul residuals offsite as a solid rather than as a liquid.

As an additional consideration, drying rate and percent solids concentration could be improved considerably by turning over the residuals in the lagoons and drying beds on a periodic basis. This can be done using a number of different systems similar to a Brown Bear.

Section 5

Design Criteria and Building Options

The design criteria for the recommended residuals thickening building are based on data from piloting as well as data provided by the City of Boulder reflecting the operation of the Betasso WTF. While data was provided by the City of Boulder at multiple points during the study, the final design criteria is based on a data set spanning from 11/19/2012 to 8/20/2014. As a result of using this larger more recent data set, some parameters in the design criteria will vary from those listed in earlier Tech Memos. This data set successfully captures a facility operation change where residuals were removed from each of the sedimentation basins every 4 days which resulted in higher solids concentrations.

Figure 5.1 is a process flow diagram showing the facility processes that contribute to residuals production that currently goes to the lagoons and drying beds along with the future mechanical thickening process.

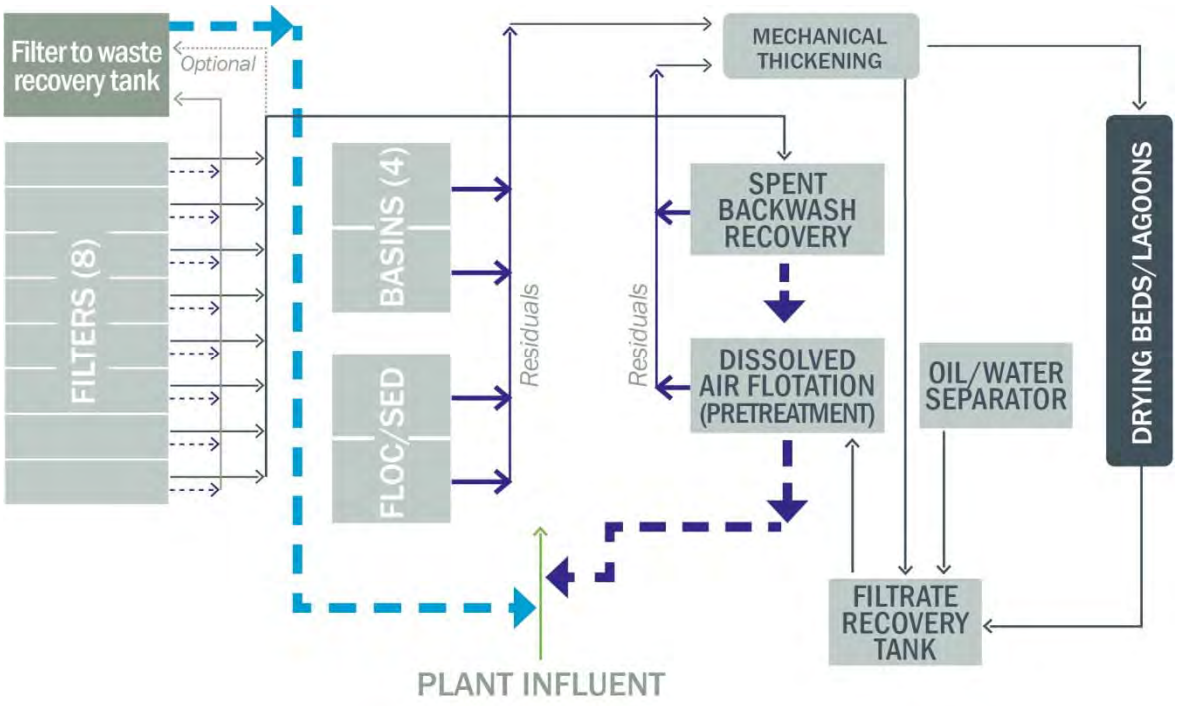

Figure 5-1 Process Flow Diagram with Future Mechanical Thickening

The basis of design criteria shown in Table 5-1 is based on a data set spanning from 11/19/2012 to 8/20/2014. Design criteria peak facility production at 35mgd and 50mgd were calculated by scaling up current data. In addition to showing the residuals production, the maximum seven day moving average reflects the maximum likely daily sludge production during the facility's peak week. The City of Boulder and Betasso operations staff desires to only operate the thickener 7 hours a day and 5

days a week under normal conditions. Under facility peak flows an additional day of operation is acceptable and may be required.

Table 5-1. Basis of Design Criteria

	Current[a]	35mgd[b]	50mgd[b]
Facility Peak Flow (mgd)	27	35	50
Facility Average Flow (mgd)	12	16	23
Avg. Daily Residuals (gpd)	13,283	17,331	24,758
Max 7 Day Moving Avg Daily Residuals (gpd)	21,064	27,482	39,261
Avg Solids Loading Rate (lb/day)	885	1,155	1,650
Max 7 Day Moving Avg Solids Loading Rate (lb/day)	1,404	1,831	2,616
Equalized Residuals Solids Concentration Range	0.5% to 1.5%		
Thickened Residuals Target Concentration	>6.0%		
Normal Thickening Schedule (hrs/week)	35		

a. *Based on Facility data provided by the City of Boulder spanning from 11/19/2012 to 8/20/2014*

b. *Represents scaled values based on current facility operation*

Table 5-2 shows design criteria for the gravity thickener system. Due to the non essential nature of the thickening system to the daily operation of Betasso WTF it was decided that complete redundancy was unnecessary. Redundancy is desired on the sludge feed pumps and thickened sludge conveyance pumps but is not needed for the gravity thickener and polymer system. In the event the thickening system needs to be temporarily taken out of service, the ability for un-thickened sludge to be sent directly to the drying beds and lagoons needs to be maintained.

Table 5-2. Residuals Thickening Preliminary Design Criteria

Thickener	
Type	Gravity Belt Thickener
Quantity	1
Capture Rate	>95%
Solids Loading Rate	375 lbs/hr
Polymer Dosage Range lb/dry ton	7 to 11lb/dry ton
Wash Water Booster Pumps	
Type	Centrifugal
Quantity	1
Flow	15 gpm
Head	120 psig

Table 5-2. Residuals Thickening Preliminary Design Criteria	
Polymer Feed System	
Type	Emulsion
Quantity	1
Capacity	1.0 gph
Polymer Storage	
Type	Totes
Quantity	2
Capacity	275 gallons
Equalization Tank	
Type	Fully mixed
Volume	75,000 gallons
Material	Concrete
GBT Feed Pumps	
Type	Centrifugal w/VFD
Quantity	2
Flow Rate	150gpm
Thickened Sludge Pumps	
Type	Progressing Cavity, Hopper-Fed
Quantity	2
Flow	5.0 gpm
Piping	Glass Lined Ductile Iron Pipe

In order to evaluate the logistics of the system, a draft building layout and site plan are shown in Appendix A. The building shown contains all components needed for thickening including equalization, and is arranged in a way to allow for future flexibility such as the addition of a belt filter press. Due to the limited availability of space at Betasso, the space just west of the DAF building was found to be the most favorable location for a new thickening building. The following are reasons this space was chosen:

- Close proximity to the main process building.
- Close proximity to DAF electrical and control tie-ins.
- Easy tie-in point to all sludge producing processes.
- Favorable hydraulics and near straight line run for thickened sludge piping.
- Convenient polymer tote delivery from road.

While traditionally the thickening and equalization system would be housed in a permanent building, The City of Boulder has expressed some interest in the possibility of utilizing a trailer mounted unit. This would not only allow for the thickener to be used at the Reservoir WTF as well as the Betasso WTF, but would also result in lower capital costs than a permanent building. Appendix C shows a proposal produced by BDP for a trailer mounted GBT. Even if a trailer mounted unit is used there will

still be a need for permanent equalization tanks to be installed. One of the major drawbacks to a trailer mounted unit is that in order for the GBT to be easily maintained the trailer sides will need to be removable which means using a soft sided trailer with curtains that can be pulled back. The curtain walls can be insulated but will likely not seal as well as a hard sided trailer which may prove difficult to heat in the winter. Nevertheless, a trailer mounted GBT is still a viable option, and if implemented would likely be best situated at the same location as the proposed thickening building.

Section 6

Cost Summaries

Below are opinions of probable costs associated with both a permanent installation and a trailer mounted GBT for comparison. For more detailed cost summaries see Appendix B

Table 6-1. Thickening Building Opinion of Probable Project Cost				
Summary of Construction Costs				
	Thickening Facility Construction Costs			$1,000,000
	Year of Construction Estimate	2014		
	Mid-Point of Construction	2017		
	Escalation Rate, per year	3.0%	Escalation Costs	$93,000
			Subtotal Construction Costs	$1,093,000
Summary of Engineering Fees				
	Engineering - Predesign	4.0%		$ 44,000
	Engineering - Design & Bidding Services	8.0%		$ 87,000
	Engineering - Construction	4.0%		$44,000
	Resident Engineering	4.0%		$44,000
	Post Construction Phase	2.0%		$22,000
	Total Percentage	22.0%		
			Total Engineering Costs	$240,000
Summary of Administrative Costs				
	Miscellaneous	1.5%		$16,000
	Material Testing	0.5%		$5,000
	Total Percentage	2.0%		
			Total Administrative Costs	$21,000
Summary of Contractor Markups				
	Overhead and Profit	9.0%		$98,000
	General Conditions	10.0%		$109,000
	Start-Up and Training	1.0%		$11,000
	Insurance	2.0%		$22,000
	Bonds	1.5%		$16,000
	Total Percentage	23.5%		
			Total Contractor Markup Costs	$260,000
			Total Costs	$1,611,000
	Contingency	25.0%		$400,000
Total Opinion of Probable Project Cost				**$2,000,000**

Table 6-2. Trailer Mounted GBT Opinion of Probable Project Cost				
Summary of Construction Costs				
	Thickening Facility Construction Costs			$700,000
	Year of Construction Estimate	2014		
	Mid-Point of Construction	2017		
	Escalation Rate, per year	3.0%	Escalation Costs	$65,000
			Subtotal Construction Costs	$770,000
Summary of Engineering Fees				
	Engineering - Predesign	4.0%		$31,000
	Engineering - Design & Bidding Services	8.0%		$62,000
	Engineering - Construction	4.0%		$31,000
	Resident Engineering	4.0%		$31,000
	Post Construction Phase	2.0%		$15,000
	Total Percentage	22.0%		
			Total Engineering Costs	$170,000
Summary of Administrative Costs				
	Miscellaneous	1.5%		$12,000
	Material Testing	0.5%		$4,000
	Total Percentage	2.0%		
			Total Administrative Costs	$16,000
Summary of Contractor Markups				
	Overhead and Profit	9.0%		$69,000
	General Conditions	10.0%		$77,000
	Start-Up and Training	1.0%		$8,000
	Insurance	2.0%		$15,000
	Bonds	1.5%		$12,000
	Total Percentage	23.5%		
			Total Contractor Markup Costs	$180,000
			Total Costs	$1,136,000
	Contingency	25.0%		$280,000
Total Opinion of Probable Project Cost				**$1,400,000**

Appendix A: Site Plan and Building Layout

Path: \\BCDENFP01\Projects\Data\GEN\Boulder\144528-Betasso Water Treatment Plant\04 - Deliverables\FINAL REPORT File Name: Residuals Thickening Facility Site Plan Plot Date: September 8, 2014

Brown AND Caldwell

SCALE: AS SHOWN

144528

DATE: September 8, 2014

City of Boulder Betasso Water Treatment Plan

Residuals Thickening Building Site Plan

FIGURE

F1

Path: \\BCDENFP01\Projects\Data\GEN\Boulder\144528-Betasso Water Treatment Plant\04 - Deliverables\FINAL REPORT File Name: Residuals Thickening Facility Plot Date: September 8, 2014 10:18 AM Ca

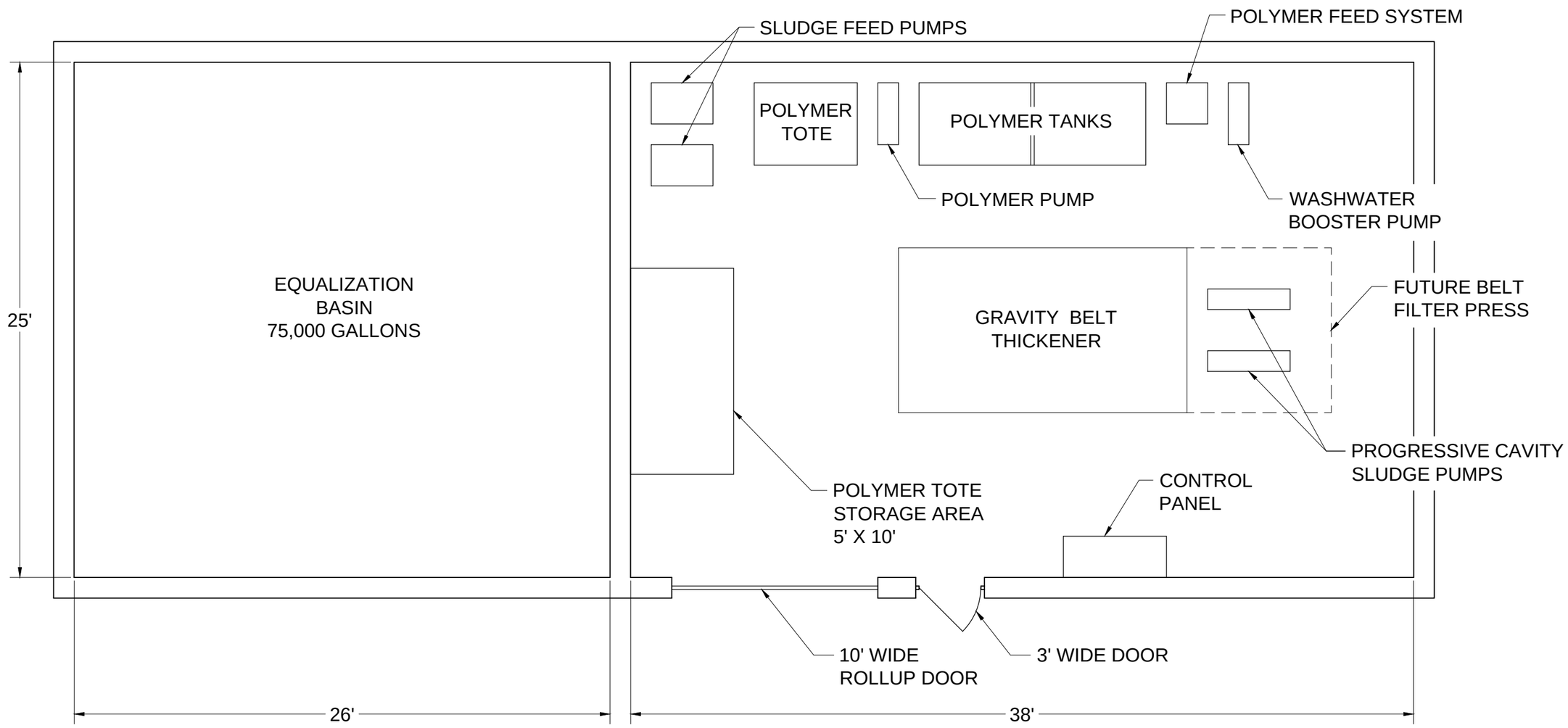

Brown AND Caldwell

SCALE: NOT TO SCALE

144528

DATE: 09-05-2014 , 2014

City of Boulder Betasso Water Treatment Plan

Residuals Thickening Building

FIGURE

F2

Appendix B: Cost Summaries

Project: City of Boulder Betasso WTF Residuals Study
Date: 9/8/2014
By: Jamie Eichenberger
Class: 5 (Planning-Level)

Total Opinion of Probable Project Cost Summary Sheet

Description	#	Units	Unit Cost	Total Cost
Summary of Construction Costs				
Equalization Tank	135	CY	$ 750	$ 101,000
EQ Mixers	2	EA	$ 10,000	$ 20,000
Gravity Belt Thickener	1	EA	$ 158,000	$ 158,000
Mixer	1	EA	$ 3,500	$ 4,000
Control Panel	1	EA	$ 30,000	$ 30,000
Wash Water Pump	1	EA	$ 3,900	$ 4,000
Polymer Make-Up Unit	1	EA	$ 20,000	$ 20,000
Flow Meter	1	EA	$ 4,000	$ 4,000
Feed Pump	2	EA	$ 15,000	$ 30,000
Thickened Sludge Pump	2	EA	$ 20,000	$ 40,000
Piping and Valves - 6-inch	700	LF	$ 180	$ 126,000
Building	1,200	SF	$ 250	$ 300,000
EI&C	15%	LS		$ 130,000
Site Work	1	LS	$ 50,000	$ 50,000
			Subtotal Construction Costs	**$ 1,000,000**
Year of Construction Estimate	2014			
Mid-Point of Construction	2017		Escalation Costs	$ 93,000
Escalation Rate	3.0%			
			Total Construction Costs	**$ 1,090,000**
Summary of Engineering Fees				
Engineering - Predesign	4.0%			$ 44,000
Engineering - Design & Bidding Services	8.0%			$ 87,000
Engineering - Construction	4.0%			$ 44,000
Resident Engineering	4.0%			$ 44,000
Post Construction Phase	2.0%			$ 22,000
Total Percentage	22.0%			
			Total Engineering Costs	**$ 240,000**
Summary of Administrative Costs				
Control System (included)	0.0%			$ -
Land Acquisition	0.0%			$ -
City Purchased Equipment	0.0%			$ -
Miscellaneous	1.5%			$ 16,000
Material Testing	0.5%			$ 5,000
Total Percentage	2.0%			
			Total Administrative Costs	**$ 21,000**
Summary of Contractor Markups				
Overhead and Profit	9.0%			$ 98,000
General Conditions	10.0%			$ 109,000
Start-Up and Training	1.0%			$ 11,000
Insurance	2.0%			$ 22,000
Bonds	1.5%			$ 16,000
Total Percentage	23.5%			
			Total Administrative Costs	**$ 260,000**
			Total Costs	$ 1,611,000
Contingency	25.0%			$ 400,000
			Total Opinion of Probable Project Cost	**$ 2,000,000**

Project: City of Boulder Betasso WTF Residuals Study
Date: 9/8/2014
By: Jamie Eichenberger
Class: 5 (Planning-Level)

Total Opinion of Probable Project Cost Summary Sheet

Description	#	Units	Unit Cost	Total Cost
Summary of Construction Costs				
Equalization Tank	135	CY	$ 750	$ 101,000
EQ Mixers	2	EA	$ 10,000	$ 20,000
Containerized Gravity Belt Thickener	1	EA	$ 404,000	$ 404,000
Concrete Slab	35	CY	$ 750	$ 26,000
Piping and Valves - 6-inch	700	LF	$ 180	$ 126,000
EI&C	5%	LS		$ 30,000
Site Work	1	LS	$ 25,000	$ 25,000
			Subtotal Construction Costs	**$ 700,000**
Year of Construction Estimate	2014			
Mid-Point of Construction	2017		Escalation Costs	$ 65,000
Escalation Rate	3.0%			
			Total Construction Costs	**$ 770,000**
Summary of Engineering Fees				
Engineering - Predesign	4.0%			$ 31,000
Engineering - Design & Bidding Services	8.0%			$ 62,000
Engineering - Construction	4.0%			$ 31,000
Resident Engineering	4.0%			$ 31,000
Post Construction Phase	2.0%			$ 15,000
Total Percentage	22.0%			
			Total Engineering Costs	**$ 170,000**
Summary of Administrative Costs				
Control System (included)	0.0%			$ -
Land Acquisition	0.0%			$ -
City Purchased Equipment	0.0%			$ -
Miscellaneous	1.5%			$ 12,000
Material Testing	0.5%			$ 4,000
Total Percentage	2.0%			
			Total Administrative Costs	**$ 16,000**
Summary of Contractor Markups				
Overhead and Profit	9.0%			$ 69,000
General Conditions	10.0%			$ 77,000
Start-Up and Training	1.0%			$ 8,000
Insurance	2.0%			$ 15,000
Bonds	1.5%			$ 12,000
Total Percentage	23.5%			
			Total Administrative Costs	**$ 180,000**
			Total Costs	$ 1,136,000
Contingency	25.0%			$ 280,000
			Total Opinion of Probable Project Cost	**$ 1,400,000**

Appendix C: BDP Trailer Mounted GBT Proposal

BDP INDUSTRIES, INC.
PROPOSAL
BETASSO WTP, BOULDER COLORADO
FOR
MOBILE GRAVITY BELT THICKENER

BY
KELLY BROWN
BDP INDUSTRIES, INC.

Route 29 Greenwich, New York 12834
Phone No 518-695-6851
Email: kelly@bdpindustries.com

Date: Tuesday, August 19, 2014

To: Brown & Caldwell Engineering
1697 Cole Boulevard Suit 200
Golden, CO 80401

Attn: Tony VanHaverbeke

Bus: (303) 239-5424
Mobile: (303) 868-7101
E-mail: avanhaverbeke@brwncald.com

Reference: Betasso WTP, Boulder Colorado:
3/4m GBT Mobile Trailer
BDP budget quotation 082114-1823

Dear Mr. Tony VanHaverbeke:

Per our discussion yesterday BDP is offering of two mobile options for a 0.75 meter Gravity Belt Thickener. One option is to mount the unit on a complete equipment skid assembly and the other is to mount the unit on a fully enclosed goose neck trailer. (See photo on front cover.)

The skid equipment would be located in an existing structure while the trailer mounted unit would be mounted on a gooseneck trailer. The enclosure on the trailer would include lights, heaters, outlets, insulation, insulated soft side curtains (simplified maintenance), flexible hoses, power cord, and level jacks.

The equipment skid is constructed of 10” structural steel channel which is then hot dip galvanized. The inside of the skid is then lined with 304L stainless steel to create the filtrate sump. Aluminum grating is installed down both sides of the skid for the operators to view and make adjustments. The accessory equipment will be mounted on the front of the skid. See photo of skid mounted belt press constructed as mentioned.

Route 29 Greenwich, New York 12834
Phone No 518-695-6851
Email: kelly@bdpindustries.com

Below is a photo of a recent project we did, showing the heavy curtain material with a door installed in the side. The tie downs seal the curtain on the top and bottom.

Route 29 Greenwich, New York 12834
Phone No 518-695-6851
Email: kelly@bdpindustries.com

Another consideration is to provide adequate space down the side of the unit for operators and maintenance staff. To provide this capability, consideration should be given to providing a fold down walk way on one side, see photo below.

The soft side curtains would be designed to wrap around the catwalk and hook to the trailer bed to enclose the unit in winter operation.

Below is a description of what would be offered.

EQUIPMENT DESCRIPTION:

Gravity Belt Thickener:

One (1) BDP Model GBT, 0.75 meter, Gravity Belt Thickener Assembly: The GBT equipment package includes a complete press and appurtenant equipment described as follows:

1. One (1) 316L stainless steel polymer injection and polymer/sludge mixing system consisting of an injection ring, variable vortex mixer, and reducing fittings.

2. One (1) 3/4m GBT as specified with the following design features:

    a.) Hot-dipped galvanized tubular frame with machined bearing pads.
    b.) Up-flow, high solids feedbox with variable 1/3 HP speed paddle wheel.
    c.) Ten foot gravity zone at operator level with 1 HP variable frequency drive.
    d.) Six rows of adjustable, furrowing plows.
    e.) 304 stainless steel sludge dam section.
    f.) Nylon covered roller.
    g.) 304 stainless steel wetted parts.
    h.) 316 stainless steel hydraulic tubing and fittings.
    i.) Dodge spherical split case bearings rated for 1,000,000 hours at 50 PLI.

Route 29 Greenwich, New York 12834
Phone No 518-695-6851
Email: kelly@bdpindustries.com

j.) Hydraulic tensioning and tracking.
k.) Composite cylinders with stainless steel rods.
l.) Self-cleaning, adjustable angle belt showers.
m.) TEFC variable speed motors.
n.) PVC conduit.
o.) Zero speed belt sensor.

3. One (1) complete NEMA 4X electrical control panel for all gravity belt control functions and drives. The panel shall contain interlocks and controls for the whole system: GBT, feed pump, polymer make up and metering system, wash water pump, thickened sludge pump, hydraulic power unit. The panel would be built around a Allen Bradley Compact Logix PLC with 12" color Panel View Plus 6 operator interface terminal.

4. One (1) 1 HP hydraulic power unit with 20-gallon reservoir.

5. One (1) 5 HP Goulds Booster pump capable of boosting 15 GPM from 40 to 120 PSI.

6. One (1) Fluid Dynamics polymer make-down unit with 3 gallon per hour progressive cavity neat pump and 1800 GPH dilution capability.

7. One (1) Boerger or equal Rotary Lobe Thickened Sludge feed pump capable of 200 GPM at 300 RPM with 10 HP VFD Drive for speed control.

8. One (1) Boerger or equal Rotary Lobe Thickened Sludge feed pump capable of 50 GPM at 150 RPM with 10 HP VFD Drive for speed control.

9. One (1) 4" diameter Siemens sludge flow meter with remote display and grounding rings.

10. One (1) 304 stainless steel TWAS discharge hopper with pressure sensor.

Equipment Skid:

1. A 10" chanel skid assembly that is hot dip galvanized after fabrication with alumimum grating on both sides of the unit. The skid would have a 304 stainless steel sump built inside the skid with a flanged outlet. All the accessories would be mounted, piped and wired to the control panel.

Mobile Trailer:

1. One (1) goose neck trailer with dual axels, roof and insulated curtain sides. The following modifications would be made to the trailer:

Route 29 Greenwich, New York 12834
Phone No 518-695-6851
Email: kelly@bdpindustries.com

2. A fold down walk way would be built on one side with aluminum grating and kick plates and hand rail.

3. Overhead Infrared heater would be purchased and mounted to ceiling.

4. Fold away access stairs installed and door added to side curtain.

2. Trailer would include jack assemblies to allow leveling the unit.

3. A hose crib would be built underneath the trailer structure in which hoses could be placed when moved from site to site.

4. Six (6) days of start-up services spread over two trips.

5. Freight to the jobsite.

SUBMITTAL DATA

Submittal will be made in the number of copies specified and will be available within 4 to 6 weeks after firm purchase order and all information is received at the factory.

SHIPMENT

Estimated shipping time is 14 to 18 weeks after receipt of submittal approval and release to manufacturing.

FIELD SERVICE

Installation observation, field performance testing, and operator instruction services as will be supplied as listed above. Additional services can be supplied at $1,000 per day plus travel expenses.

PRICING

Budget prices for the above equipment are as follows:

• One (1) ¾ meter Gravity Belt Thickener:	$140,000
• One (1) Inline Venturi Mixer:	$3,500
• One (1) Control Panel:	$30,000
• One (1) Wash Water Pump:	$3,900
• One (1) Polymer Make Up System:	$20,000
• One (1) Flow Meter:	$4,000
• One (1) Feed Pump:	$15,000
• One (1) Thickened Sludge Pump:	$15,000
• One (1) TWAS Hopper and Pressure Sensor:	$5,000
• Field Service:	$8,800
• Freight to Job Site:	$9,000
• Sub Total:	$254,000

Route 29 Greenwich, New York 12834
Phone No 518-695-6851
Email: kelly@bdpindustries.com

- Optional Goose Neck Trailer with Insulated Roof and Curtains: $100,000
- Skid Assembly: $35,000

This price includes the shipping cost to the job site or nearest unloading point. This quotation will be valid for sixty (60) days from the date of this proposal.

TERMS

Terms of payment are 30% with order and 60% upon shipment of equipment and 10% upon startup. The attached Conditions of Sale are hereby made a part of this proposal.

An option for procurement of the equipment is a lease purchase. BDP Industries has several financial companies that we work with that handle a lease purchase or 3 to 5 years. The first months lease isn't due until after delivery to the site and after the last payment the equipment is paid for.

We appreciate this opportunity to extend our quotation and if we can answer questions or supply additional information, please do not hesitate to contact Josh Queen of Goble Sampson at (303) 815-8257.

Sincerely,

N Kelly Brown
Director
BDP Industries, Inc.

cc: A J Schmidt, BDP Industries, Inc.
&
Josh Queen
2460 W. 26th Ave, 30-C
Denver, CO 80211
303.770.6418 (office)
303.640.7549 (fax)
303.815.8257 (cell)
jqueen@goblesampson.com

Appendix D: TM1 Existing Performance and Process Optimization

1697 Cole Boulevard
Suite 200
Golden, CO 80401

T: 303.239.5400
F: 303.239.5454

Technical Memorandum

Prepared for: City of Boulder

Project Title: Betasso WTF Residuals Study

Project No.: 144528

Technical Memorandum [No. 1]

Subject: Existing Performance and Process Optimization

Date: November 18, 2013

To: Mr. Steve Buckbee, Utilities Project Manager

From: Chad Hill, Project Manager

Copy to: Project Team

Prepared by: _____
John Bratby, Senior Process Engineer

Reviewed by: _____
Chad Hill, Project Manager

Limitations:

This document was prepared solely for the City of Boulder in accordance with professional standards at the time the services were performed and in accordance with the contract between the City of Boulder and Brown and Caldwell dated June 4, 2013. This document is governed by the specific scope of work authorized by the City of Boulder; it is not intended to be relied upon by any other party except for regulatory authorities contemplated by the scope of work. We have relied on information or instructions provided by the City of Boulder and other parties and, unless otherwise expressly indicated, have made no independent investigation as to the validity, completeness, or accuracy of such information.

Table of Contents

List of Figures ii
List of Tables iii
Executive Summary 1
Section 1: Purpose 1
Section 2: Existing Facility Performance 2
2.1 Coagulation 2
2.2 Sedimentation Basin Performance 2
2.3 Filtration Performance 3
Section 3: Solids Generation 3
Section 4: Lagoon/Drying Bed Capacity 13
4.1 Existing System Description 13
Section 5: Feasibility of Utilizing the Existing DAF for Thickening 19
Section 6: Oil-Water Separator Discharges 21
Section 7: Conclusions 22
Attachment A: Sludge Hauling Invoices ..... A

List of Figures

Figure 2-1. Solids Concentration: Sedimentation Basin Underflow 3
Figure 3-1. Historical facility flows. 4
Figure 3-2. Historical raw water turbidities. 5
Figure 3-3. Historical facility flows and raw turbidities 6
Figure 3-4. Historical solids production from raw water turbidity solids. 7
Figure 3-5. Historical solids production from aluminum sulfate dosages. 8
Figure 3-6. Historical solids production from polyaluminum chloride dosages. 9
Figure 3-7. Relative composition of total solids production. 10
Figure 3-8. Historical total solids production from turbidity and coagulants. 10
Figure 3-9. Historical total solids production per unit raw water flow. 11
Figure 3-10. Annual average gallons of coagulant used per million gallons of water treated 12
Figure 4-1. Historical annual evaporation and precipitation data. 14
Figure 4-2. Summary of sludge volumes hauled from lagoons. 15

Use of contents on this sheet is subject to the limitations specified at the beginning of this document.

Figure 4-3. Daily pump-back volumes from the filtrate recovery tank. 16
Figure 5-1. Lightweight style of scraper assembly installed in existing DAF. 20
Figure 5-2. Heavier duty sludge thickening scraper assembly required for thickening duty. 21

List of Tables

Table 3-1. Historical (Calculated) Total Solids Production Per Unit Raw Water Flow 12
Table 4-1. Calculated sludge concentrations and pump-back decant volumes 16
Table 4-2. Lagoon/Drying-Bed Capacity 18
Table 5-1. DAF Operation Under Different Scenarios 20

Use of contents on this sheet is subject to the limitations specified at the beginning of this document.

Executive Summary

In order to address the Betasso Water Treatment Facility's (WTF) limited residuals handling capacity, Brown and Caldwell (BC) analyzed historical facility performance to explore the benefits of liquid-stream process optimization on solids handling facilities. The first step in the evaluation was to analyze historical data to establish a baseline for residuals production at the WTF. Next, individual liquid-stream treatment processes were examined to identify opportunities for optimization to reduce solids production and minimize the hydraulic loading to solids handling facilities. The conclusion of this analysis is that there are limited opportunities for reducing sludge production at the WTF.

The results of this evaluation indicate that the existing solids handling facilities are inadequately sized to handle the sludge production from the WTF. To continue to use the existing lagoon/drying bed system, thickening of all the sludge to at least 4 percent dry solids concentration would be advantageous.

Increasing feed solids to 4 percent would allow the existing solids treatment facilities to handle plant flows up to 35 mgd with a single annual clean-out and hauling event. As flows increase to a rated capacity of 50 mgd, feed solids concentration would have to increase to close to 6 percent. Feed solids concentrations of 4 percent are easily achievable with a thickening process alone. Concentrations of 6 percent are nearing best-case operation of thickening facilities and would require piloting to verify design criteria. Mechanical dewatering may become necessary as WTF flows increase beyond a rated capacity of 35 mgd. Drying area requirements can be reduced by instituting two clean-out and sludge hauling events per year, although the City's intent is to reduce truck traffic as far as possible.

Using the existing filter backwash recovery dissolved air flotation (DAF) to co-thicken both backwash water and sedimentation basin sludge is not feasible without extensive upgrades to the overall system. An overriding consideration is that by changing operation to dual-function backwash recovery and sludge thickening duty, neither of these functions would be optimal. Maintaining the existing DAF for the intended purpose of recovering water of suitable quality to be recycled to the head of the facility is recommended. The sedimentation sludge should be processed separately in a dedicated thickener.

Appropriate processing of the discharge from the oil-water separator requires further investigation. Preliminarily, appropriate mitigation measures include intercepting instrument drains to route those flows directly to the spent backwash equalization tank; allow the stormwater that is conveyed to the oil-water separator to run off-site together with other stormwater that already does so; and intercept the oil-water separator discharge lines to route them to the filtrate recovery tank. A monitoring program to characterize and quantify flows and water quality is recommended.

Depending on the results of subsequent thickening and dewatering investigations, to be presented in a subsequent Technical Memorandum (TM), a phased approach to residuals handling at the Betasso WTF may be recommended. In that case, thickening could be implemented as a first step. As flows continue to increase and thickening is no longer adequate for solids handling, mechanical dewatering would be added at a later stage.

Section 1: Purpose

The City of Boulder's Betasso Water Treatment Facility (WTF) is currently limited by its residuals handling capacity. The existing lagoons and drying beds do not have sufficient capacity to dewater residuals produced through current operation of the WTF.

The goal of this phase of work was to review existing reports and process data in order to fully characterize current residuals production. With this data, BC has compared current operation of the WTF to industry best

Use of contents on this sheet is subject to the limitations specified at the beginning of this document.

practices to identify potential areas for optimization and maximize the capacity of existing processes. This has been identified as a priority to minimize capital investment where practical, while also considering future expansion of the WTF. A subsequent Technical Memorandum (TM) will investigate further alternatives to mechanically thicken and dewater residuals from the WTF.

Section 2: Existing Facility Performance

Solids are principally collected from two unit processes at the Betasso WTF:

1. Sedimentation
2. Filtration

The coagulation process was also reviewed to assess possible reductions in sludge generation. The sedimentation and filtration processes were reviewed to determine if the solids concentration from these processes could be increased, minimizing the amount of water sent to the existing solids handling facilities.

2.1 Coagulation

The addition of coagulants, combined with influent solids, controls the mass of solids generated at the facility. The coagulation process was evaluated to identify if there was an opportunity for optimization. Coagulation plays an influential role in sludge production that propagates through downstream processes. Overdosing coagulant could be a potential source of additional solids loading, while under-dosing could result in lower floc density. Both of these factors may result in additional sludge volume, and would contribute to the solids handling problem.

Comparing current coagulant dosing to other facilities with similar water characteristics indicates that the current dosing is appropriate and falls within the expected range. In addition, recent jar testing conducted at the WTF has identified the optimal coagulant dose to be similar to that currently used, and both the jar test and the WTF show similar floc characteristics. As a result, it has been determined that further optimization of the coagulation process would lead to little or no reduction in solids production and that any optimization that does take place should be done from the standpoint of improving water quality, and not reducing solids production.

2.2 Sedimentation Basin Performance

The hydraulic loading to the solids handling systems is controlled by the concentration of solids from the sedimentation and filter backwash processes. The sedimentation basin underflow is the principal source of solids by both mass and volume, and therefore provides the best opportunity for loading reduction to the solid handling facilities. Figure 2-1 shows past solids underflow concentrations, calculated using available facility data. Under current operating conditions the underflow solids concentration is approximately 0.2 percent. Recent facility data has indicated that an underflow solids concentration of approximately 2 percent is achievable by allowing sludge to accumulate for a greater interval before removal; however, past operation has shown problems with the Clari-Trac© sludge removal system, which tends to get stuck at higher sludge concentrations. Freeing stuck sludge collection units can require taking the basin offline.

The high concentrations, up to 2 percent, apparent in Figure 2-1 reflect unusual operating circumstances with offline sedimentation basins being cleaned and the discharge of accumulated sludge being discharged to the lagoons from the offline basins. Facility personnel consider that the average sludge discharge of approximately 0.2 percent is the normal operating condition to be assumed for design.

Use of contents on this sheet is subject to the limitations specified at the beginning of this document.

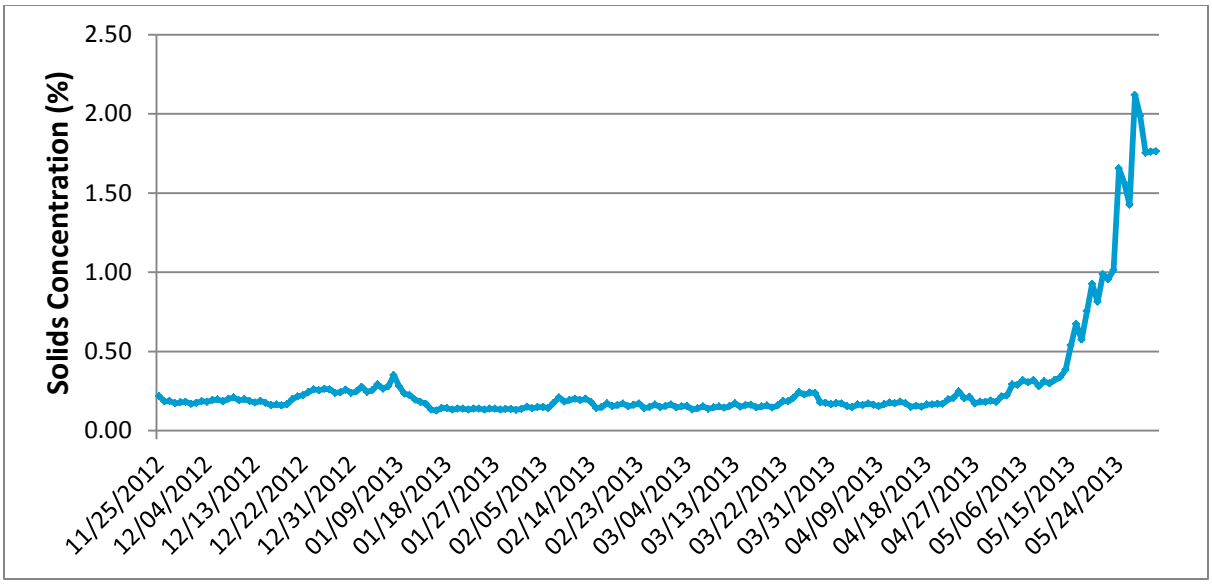

Figure 2-1. Solids Concentration: Sedimentation Basin Underflow

Based on discussions with the Clari-Trac© system manufacturer, additional controls and monitoring of the Clari-Trac© system may allow higher sludge discharge concentrations, although facility experiences have shown added operational difficulties at higher sludge concentrations and the need for increased oversight and maintenance. For the purposes of these current evaluations, an average sludge discharge from the existing sedimentation basins and Clari-Trac© system of approximately 0.2 percent is assumed.

2.3 Filtration Performance

While filter backwash does contribute to the overall solids loading, it does not do so in a direct manner. All backwash water is recovered using the existing backwash recovery DAF system. In the DAF, the backwash solids are thickened to an unknown concentration (although a reasonable guess is approximately 2 percent dry solids) before being discharged to the lagoons. There is essentially nothing that could be done regarding filter operations or DAF backwash recovery that would affect the total amount of solids generated in the WTF.

Section 3: Solids Generation

Solids are principally generated from the turbidity causing solids contained in the raw water flow, and the coagulant chemicals used to remove contaminants in the raw water. Figure 3-1 shows that during the period January 2008 through May 2013, raw water flows ranged from approximately 4 mgd to 31 mgd, with annual averages ranging from approximately 11 mgd to 14.4 mgd.

Use of contents on this sheet is subject to the limitations specified at the beginning of this document.

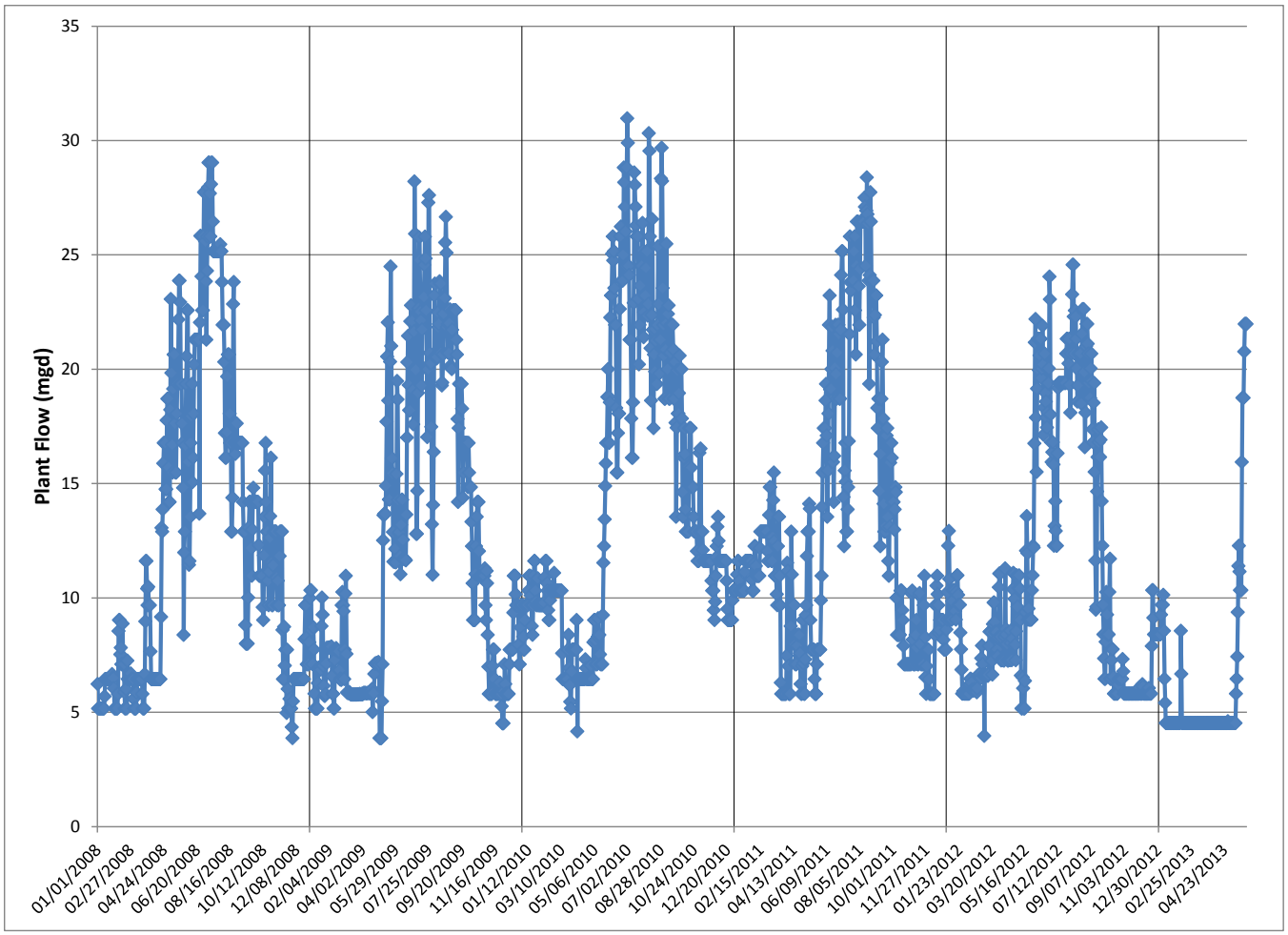

Figure 3-1. Historical facility flows.

The 2011 Master Plan Update indicated that at flows in excess of 30 to 35 mgd, the pretreatment is inadequate to sustain effective treatment. Facility personnel have indicated that the current facility capacity is likely to be up to 36 mgd. Therefore, for the current study, the capacity of the existing unit processes at the facility are assumed to be approximately 35 mgd.

The 2011 Master Plan Update also indicated that other processes within the WTF have capacities equal to or greater than 50 MGD and process piping has the hydraulic capacity to convey 50 MGD without restriction. Therefore, sludge processing calculations within this TM include a WTF capacity of 50 mgd.

Figure 3-2 shows that raw water turbidities averaged at approximately 1 Nephelometric Turbidity Unit (NTU) with peaks up to 8 NTU. Figure 3-3 shows that peak raw water turbidities generally preceed peak raw water flows by approximately one to two months. Therefore peak solids production generally occurs between peak turbidity and peak flow.

Use of contents on this sheet is subject to the limitations specified at the beginning of this document.

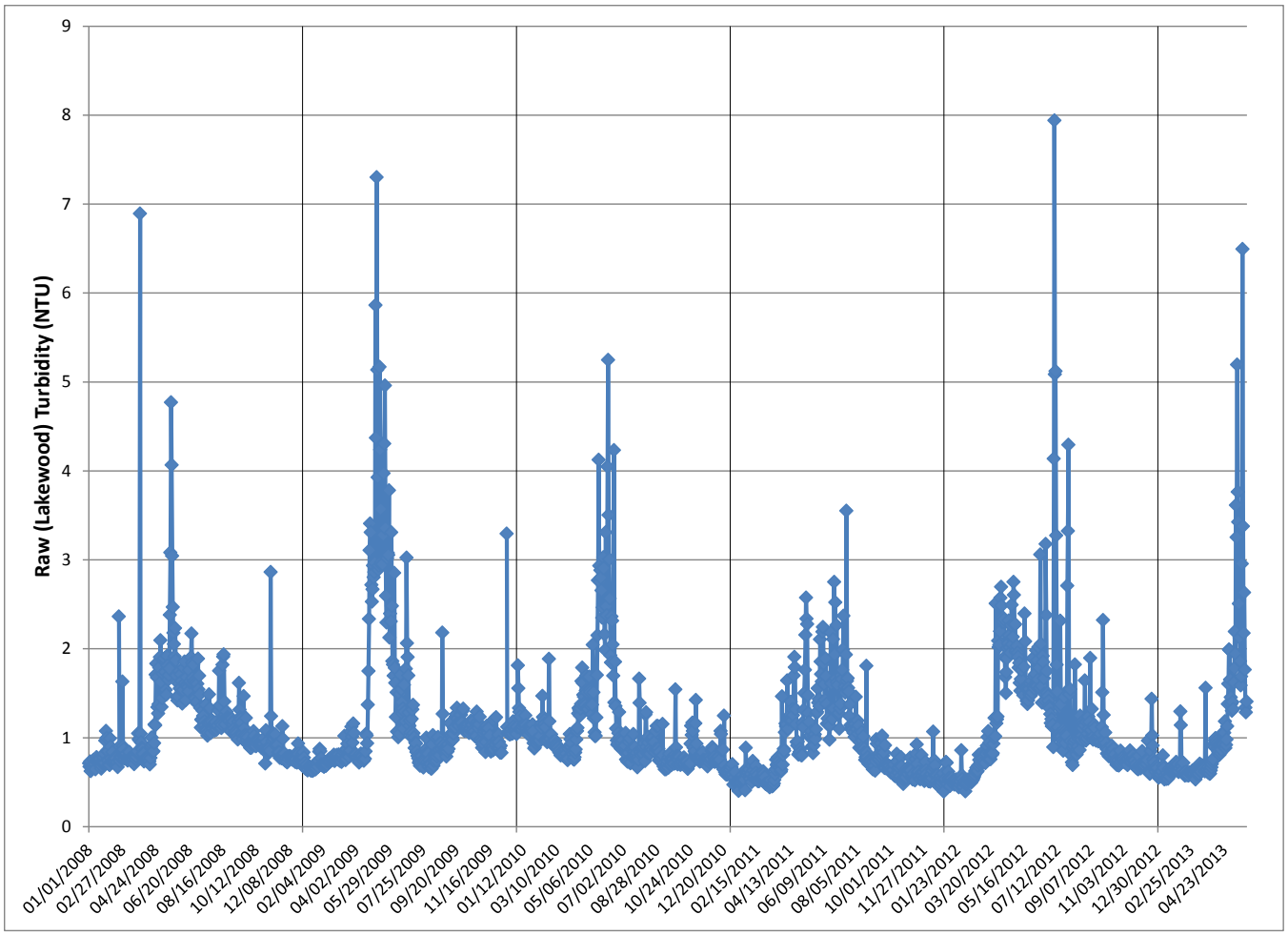

Figure 3-2. Historical raw water turbidities.

Use of contents on this sheet is subject to the limitations specified at the beginning of this document.

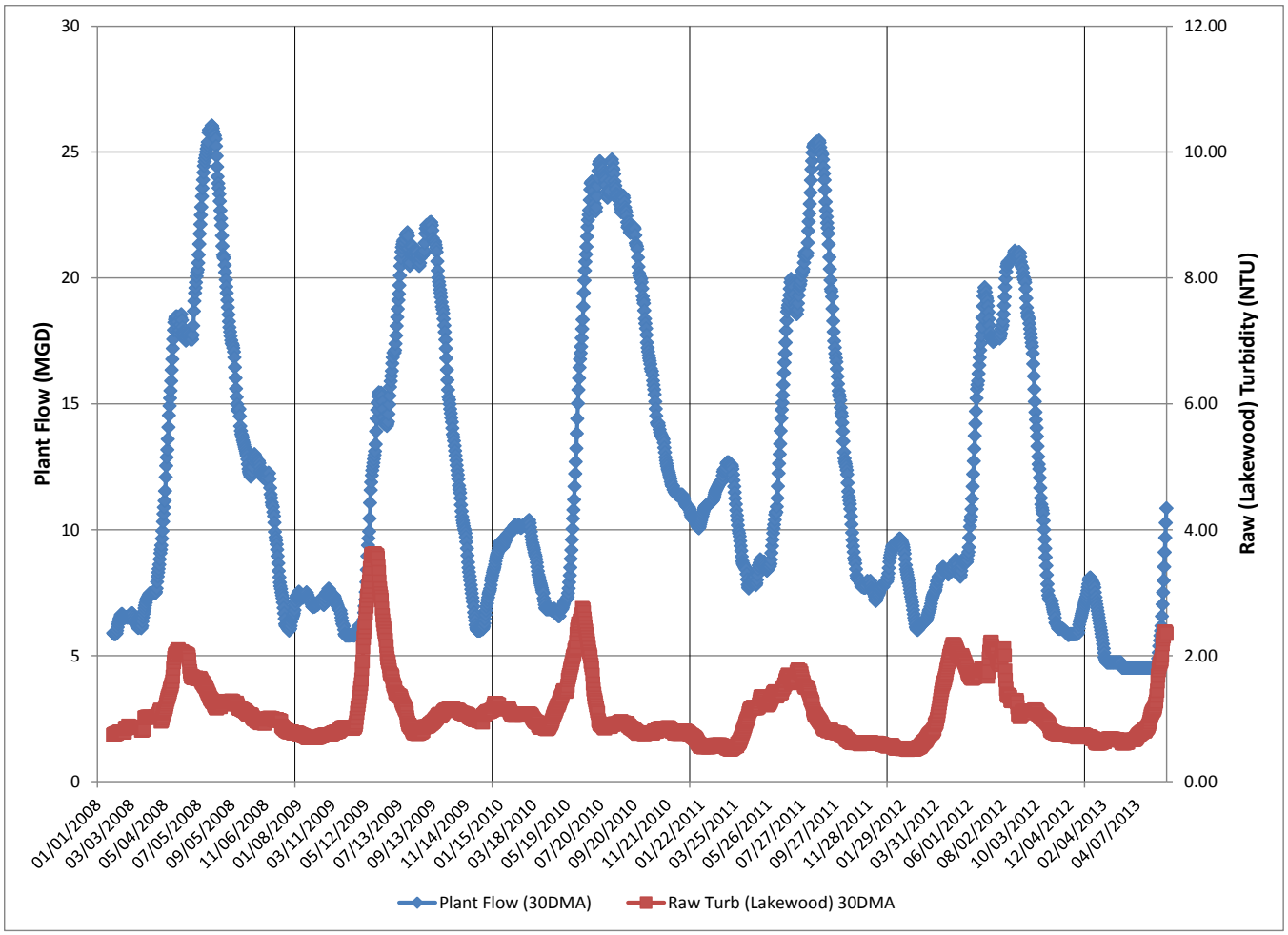

Figure 3-3. Historical facility flows and raw turbidities

Figure 3-4 shows the estimated solids production based on a conversion of raw water turbidity to suspended solids of approximately 1.0 Turbidity (NTU) = 1.2 Suspended solids (mg/L). This conversion factor is based on data from several other raw waters.

Use of contents on this sheet is subject to the limitations specified at the beginning of this document.

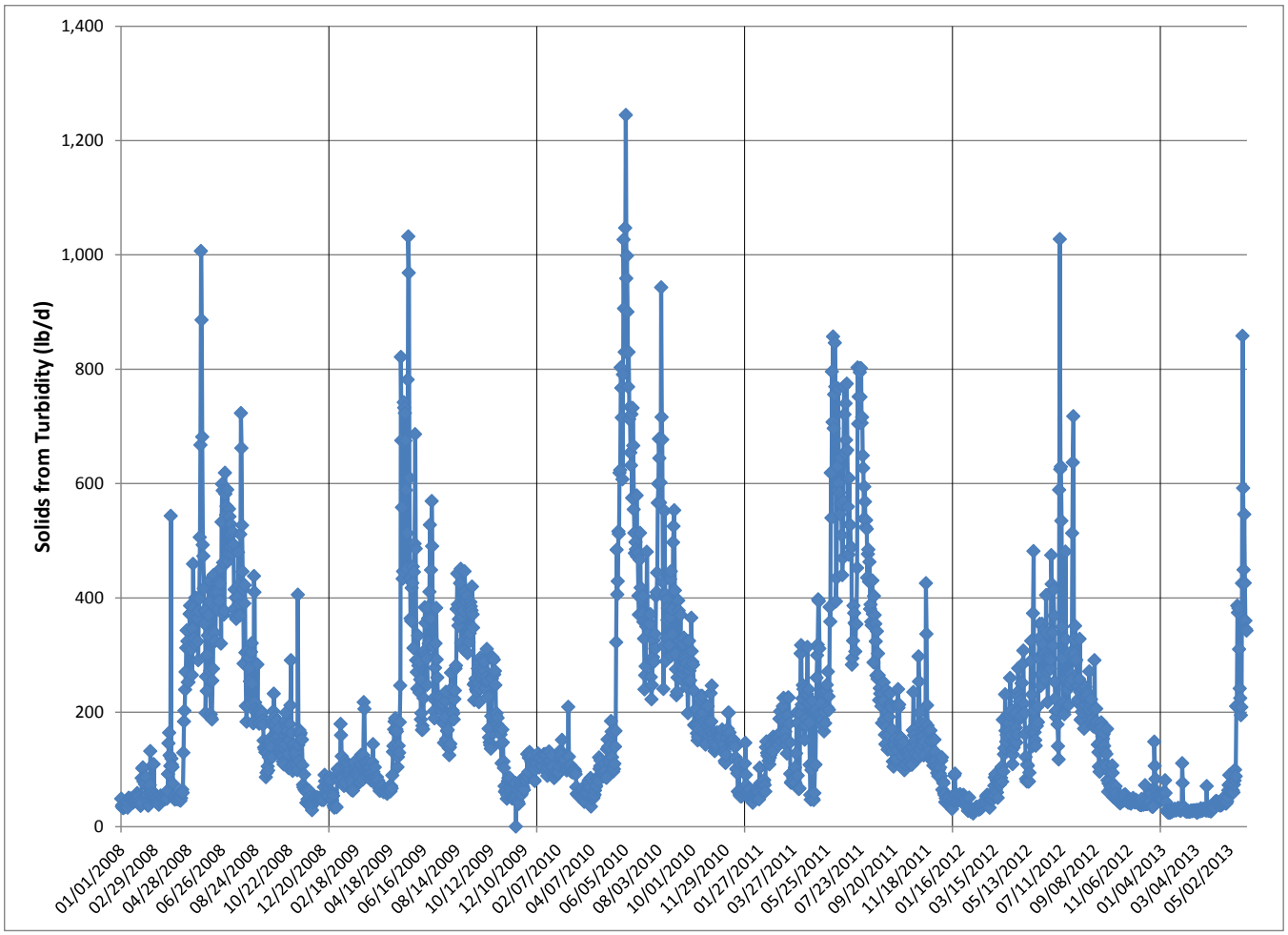

Figure 3-4. Historical solids production from raw water turbidity solids.

Figures 3-5 and 3-6 show the corresponding solids production from the addition of aluminum sulfate (alum) and polyaluminum chloride (PACl), respectively. These solids production values were calculated from reported coagulant dosages in mg/L and converting the dosages of product into a hydroxide precipitate.

Note that solids production from polymer dosed to the backwash recovery DAF was not included in the solids production calculations. This is the same assumption made in the 2005 Facility Improvement Plan since this contribution is very small. By the same token, polymer added to sedimentation basin sludge or the powdered activated carbon were not included, since these quantities are very small or are used very infrequently, if at all.

Use of contents on this sheet is subject to the limitations specified at the beginning of this document.

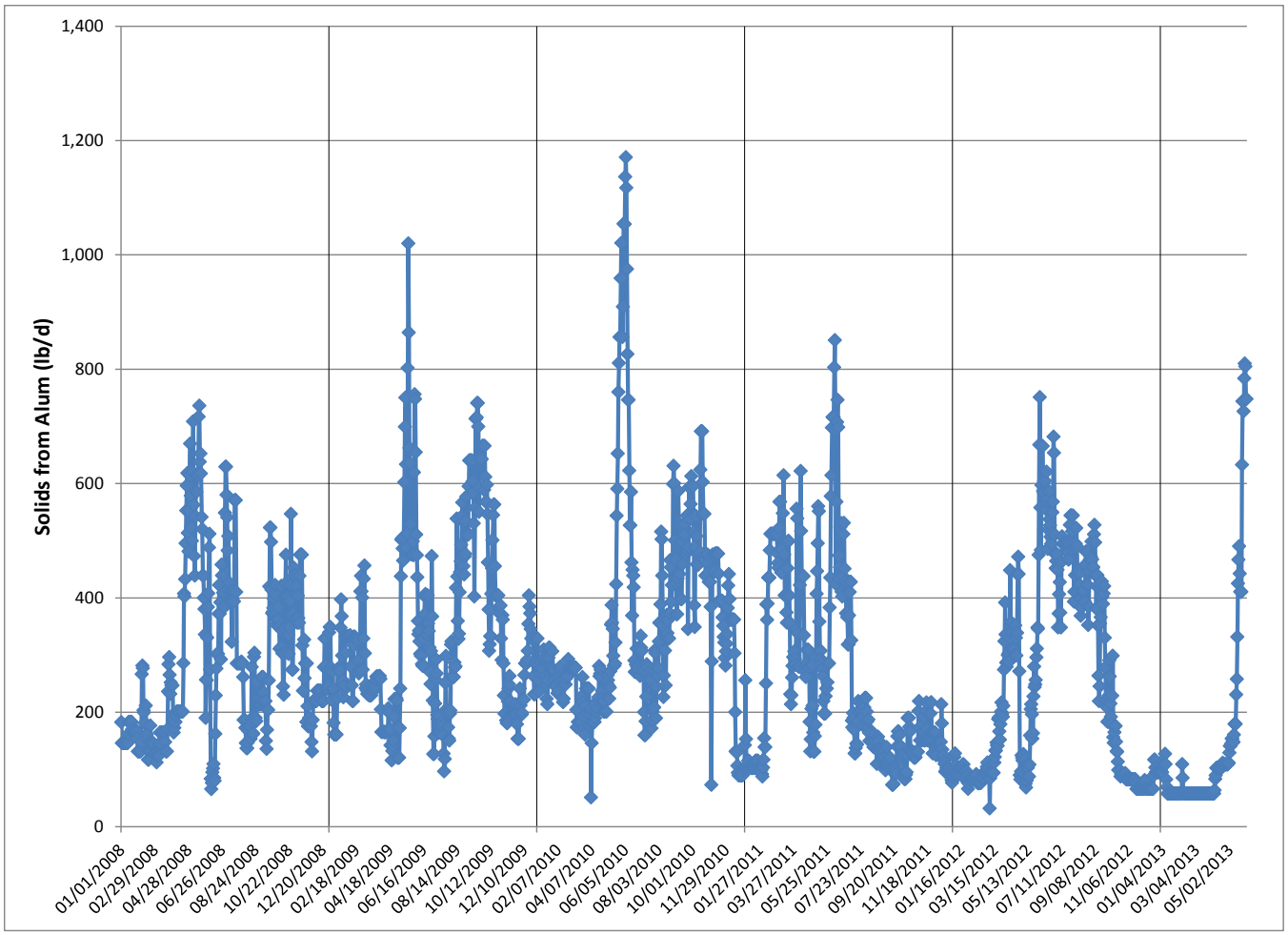

Figure 3-5. Historical solids production from aluminum sulfate dosages.

Use of contents on this sheet is subject to the limitations specified at the beginning of this document.

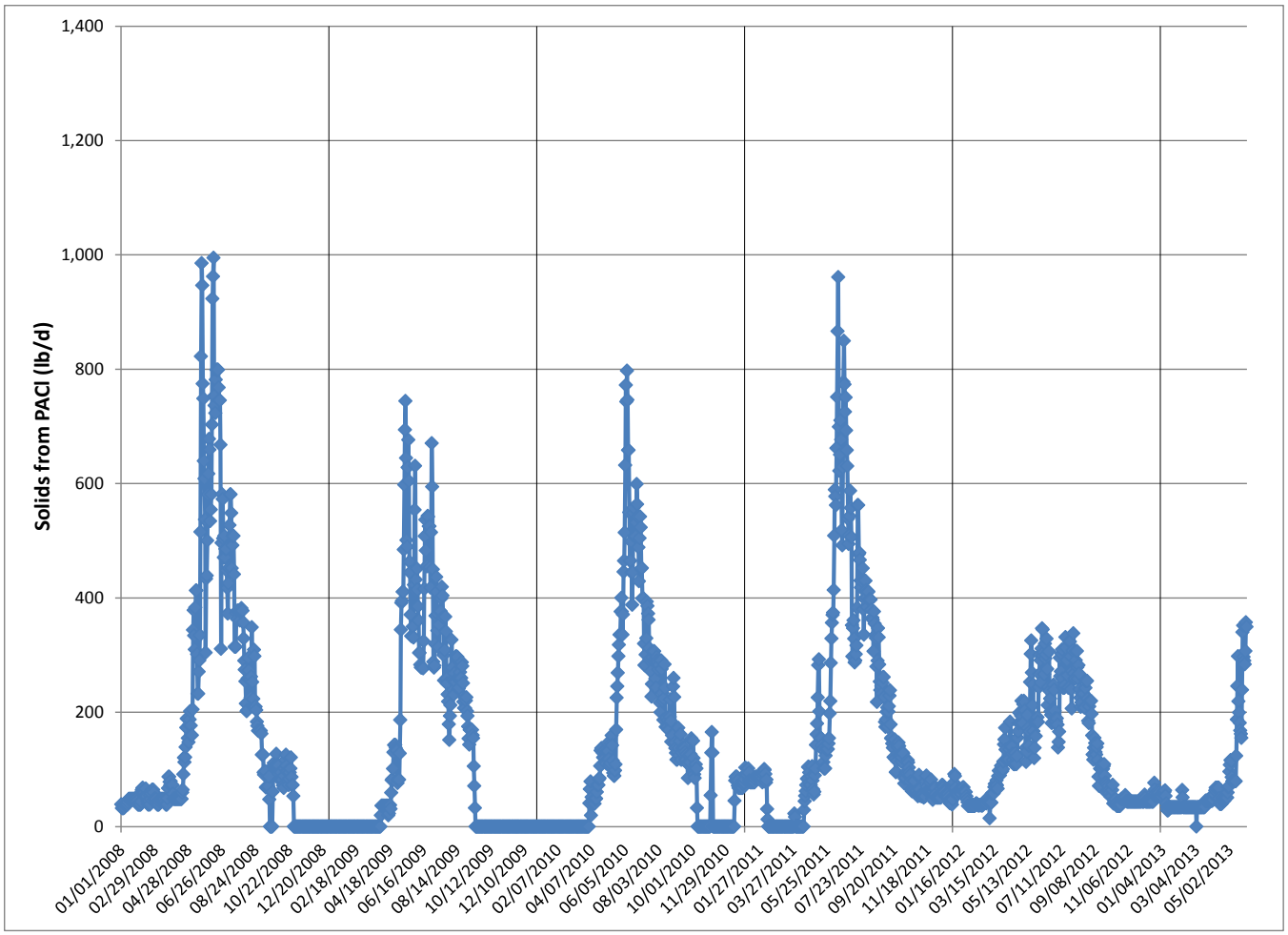

Figure 3-6. Historical solids production from polyaluminum chloride dosages.

Figure 3-7 shows the relative contributions from each of the principal sources of solids production. On an overall average basis, the total solids comprised approximately 196 lbs (31 percent) from Turbidity, 284 lbs (46 percent) from Alum, and 143 lbs (23 percent) from PACl.

Use of contents on this sheet is subject to the limitations specified at the beginning of this document.

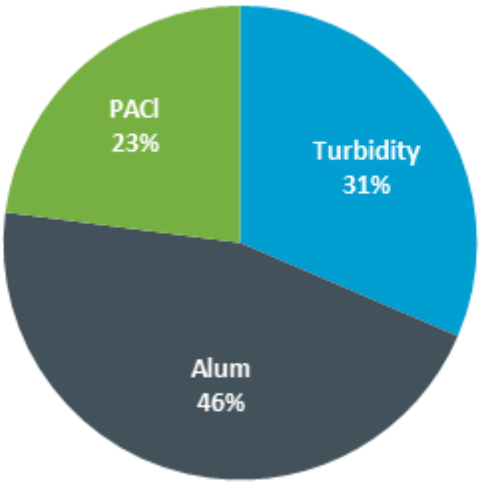

Figure 3-7. Relative composition of total solids production.

Figure 3-8 shows the total solids produced from the raw water turbidity and coagulant dosages. The highest daily solids production was approximately 3,200 lb/d with an overall average of approximately 625 lb/d.

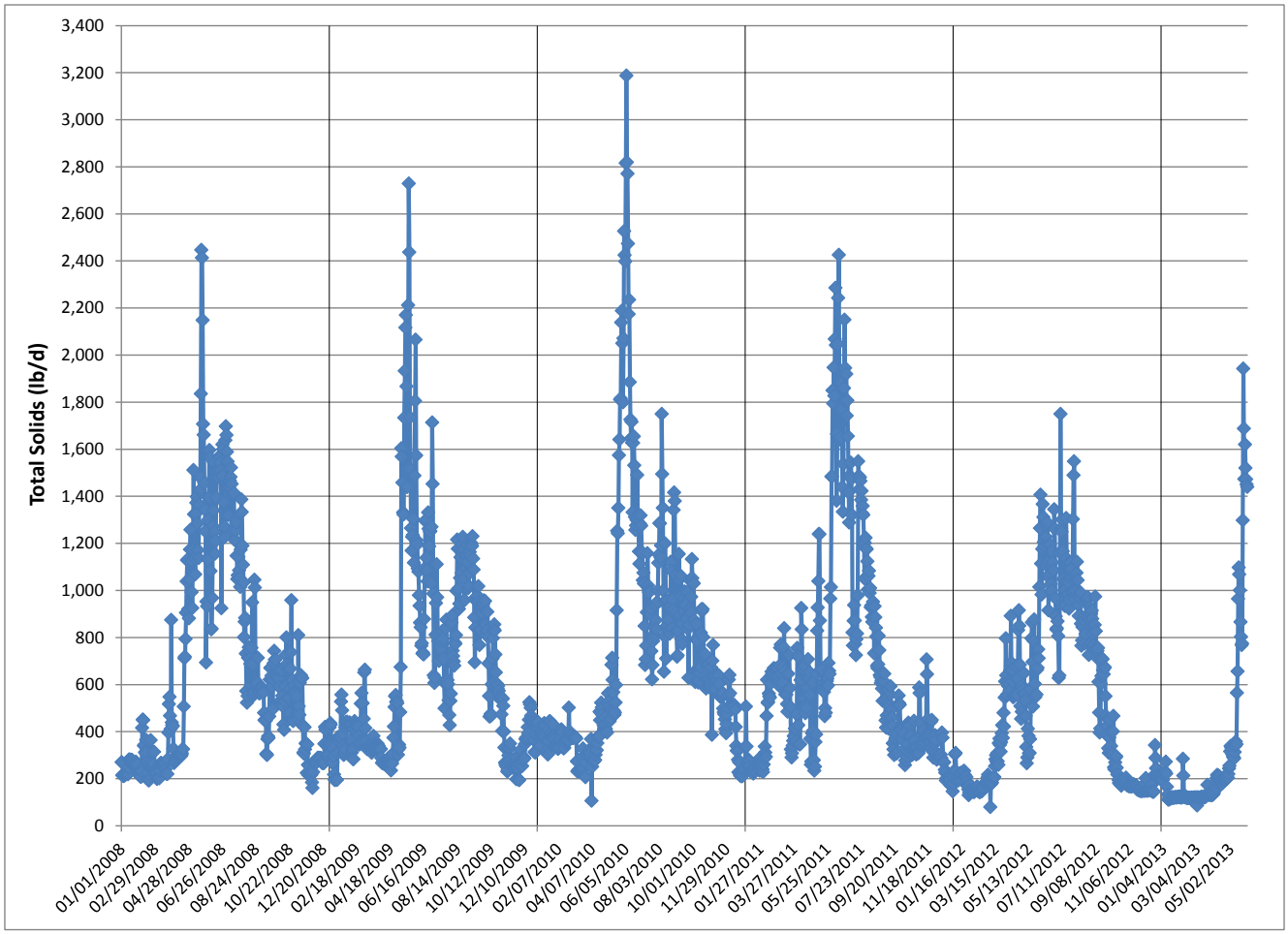

Figure 3-8. Historical total solids production from turbidity and coagulants.

Use of contents on this sheet is subject to the limitations specified at the beginning of this document.
TM No 1 - 1-8-14.docx

Figure 3-9 shows unit solids production results. The peak production rate was 135 lb dry solids per million gallons of raw water treated with an overall average of 49 lb/Millon Gallons (MG).

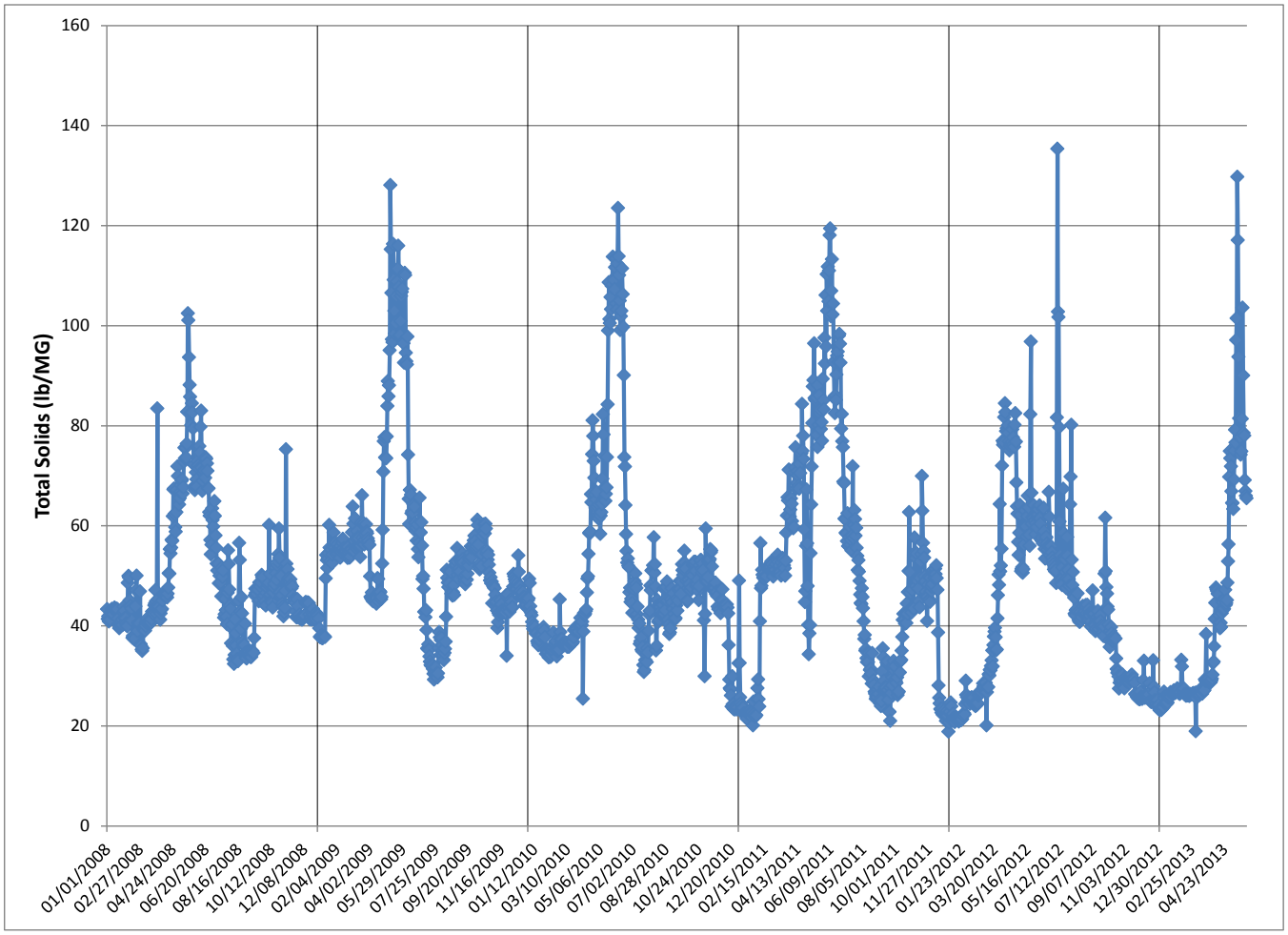

Figure 3-9. Historical total solids production per unit raw water flow.

From the results shown in Figure 3-9, Table 3-1 shows that the annual average solids production varied from 40.8 lb/MG (for the five-month period in 2013) to 55.2 lb/MG in 2009. The maximum 30-day average values varied from 75 lb/MG in 2012 to 105 lb/MG in 2010. The maximum day solids production values varied from 103 lb/MG in 2008 to 135 lb/MG in 2012.

These results were compared with values presented in the November, 2005 Facility Improvement Plan. Calculated values from plant data from 1983 through 1996 produced a significantly higher calculated annual average solids production of 66 lb/MG. The 2005 report also used plant data from 2004 which provided a value of 71 lb/MG. Despite these high values, the report also predicted a future sludge production value of 53 lb/MG in 2020. This was based on an assumed reduction of 25-percent in coagulant used in the plant. From the results presented above for 2008 through 2013, this predicted value for 2020 appears to be the reality now.

Use of contents on this sheet is subject to the limitations specified at the beginning of this document.

Table 3-1. Historical (Calculated) Total Solids Production Per Unit Raw Water Flow			
Year	Annual Average (lb/MG)	Maximum Month (lb/MG)	Maximum Day (lb/MG)
2008	49.5	78	103
2009	55.2	104	128
2010	49.6	105	124
2011	50.6	99	119
2012	42.9	75	135
2013 (through 5/31/13)	40.8	80	130

Recent plant data has noted that there has been a steady decrease in coagulant dosages. Figure 3-10 (prepared by plant personnel) shows that annual average coagulant usages (principally aluminum sulfate) have decreased from approximately 21 gallons per million gallons raw water treated (gal/MG) in 2004 to 14 gal/MG in 2012. This appears to explain the differences between calculated sludge production in the current study with those presented in the 2005 Facility Improvement Plan.

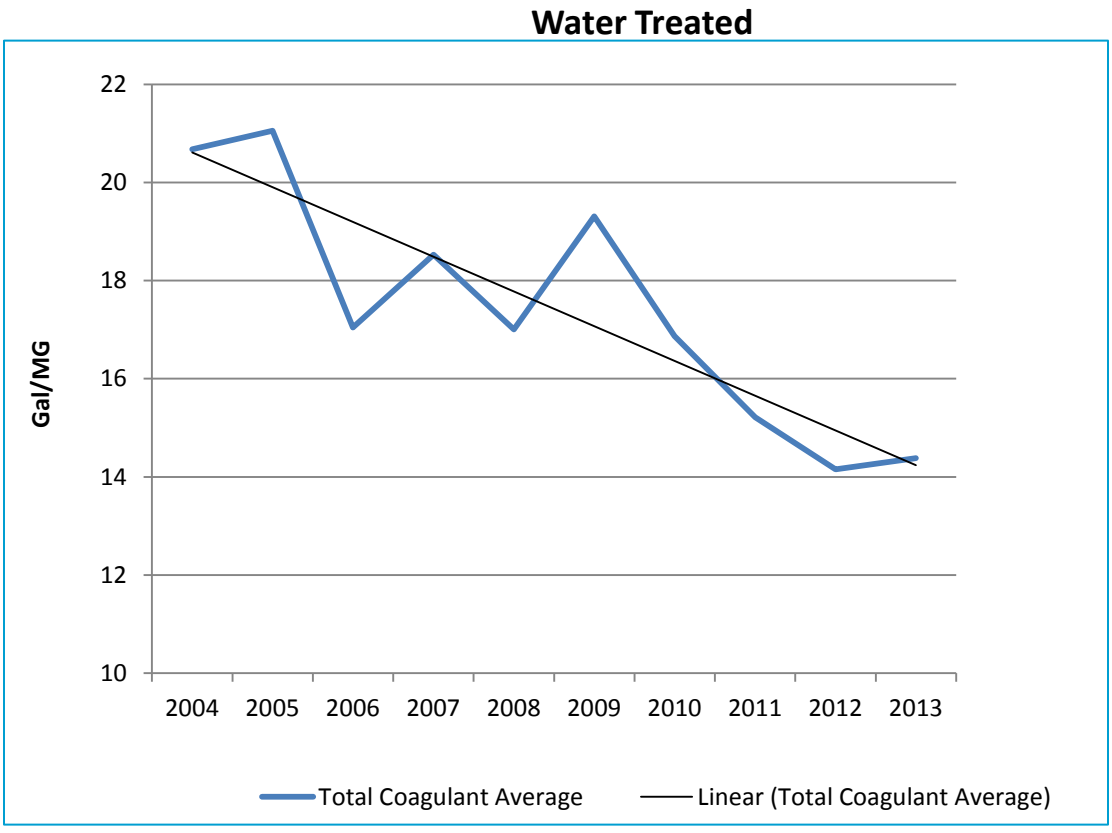

Figure 3-10. Annual average gallons of coagulant used per million gallons of water treated

Use of contents on this sheet is subject to the limitations specified at the beginning of this document.

Section 4: Lagoon/Drying Bed Capacity

4.1 Existing System Description

The existing solids handling system consists of two concrete lined south lagoons and two north drying beds. Both of the south lagoons are 24.7 ft wide, 397 ft long, and have a working depth of 3.6 ft. This results in a total surface area of approximately 20,000 ft^2 and a working volume of 528,000 gallons in the south lagoons. The north drying beds are 48 ft wide, 143 ft long, and have a working depth of 4 ft This provides a total surface area of 13,728 ft^2 and a total working volume of 411,000 gallons.

Annual average total sludge loads to the lagoons ranged from approximately 520 to 735 lb dry solids/d within the period 2008 through 2012. Corresponding annual sludge loads ranged from 95 to 134 dry tons/year.

It is possible that a major contributing factor to the current solids handling issues in the existing lagoon/drying bed system is that the lagoons and drying beds were sized with the assumption that they had functional underdrains. The south lagoons have subsequently been lined with concrete, eliminating their ability to drain. The north drying beds appear to be clogged, and the underdrain piping is suspected by operations personnel to be collapsed. Therefore, sludge dewatering in the lagoon/drying bed system occurs first by decanting whatever supernatant is formed, then by evaporation. Decant water is typically of poor quality and is pumped back to the facility via the filtrate recovery tank, which is in turn pumped to the spent backwash equalization tank (SBE), then to the filter backwash recovery dissolved-air flotation tank, then pumped back to blend with raw water for treatment through the facility.

The existing lagoon/drying bed system is severely hampered by the dilute solids concentrations of the sludge conveyed there. A further limiting factor of the lagoon/ drying bed system is the need to reserve at least one of the South lagoons to accommodate sludge from the sedimentation tanks when they are taken out of service for cleaning and sludge removal, particularly from the top deck of the tanks. Therefore, essentially, the available lagoon/drying bed area available for drying is approximately 24,000 ft^2.

There appear to be two solutions to the sludge handling issues at the facility. The first is to thicken all of the sludge before it is conveyed to the lagoon/ drying bed system. The second, to be dealt with in a further Technical Memorandum, is to both thicken and mechanically dewater the sludge, without relying on the lagoon/drying bed system for drying the sludge. This TM addresses use of the existing lagoon/drying bed system, and investigates the feasibility of thickening the sludge in the existing backwash recovery DAF system. Other alternatives for thickening the sludge will be investigated in a future TM.

The capacity for sludge drying of the existing lagoon/ drying bed system was evaluated using actual evaporation and precipitation data collected at locations as close as possible to the Betasso facility. Figure 4-1 shows the data obtained from the meteorological stations “Boulder Southwest” and “Boulder Northwest” for evaporation data, and “Longmont South” for precipitation data. The evaporation data used for the evaluations was taken as the average of the two Boulder stations.

Use of contents on this sheet is subject to the limitations specified at the beginning of this document.

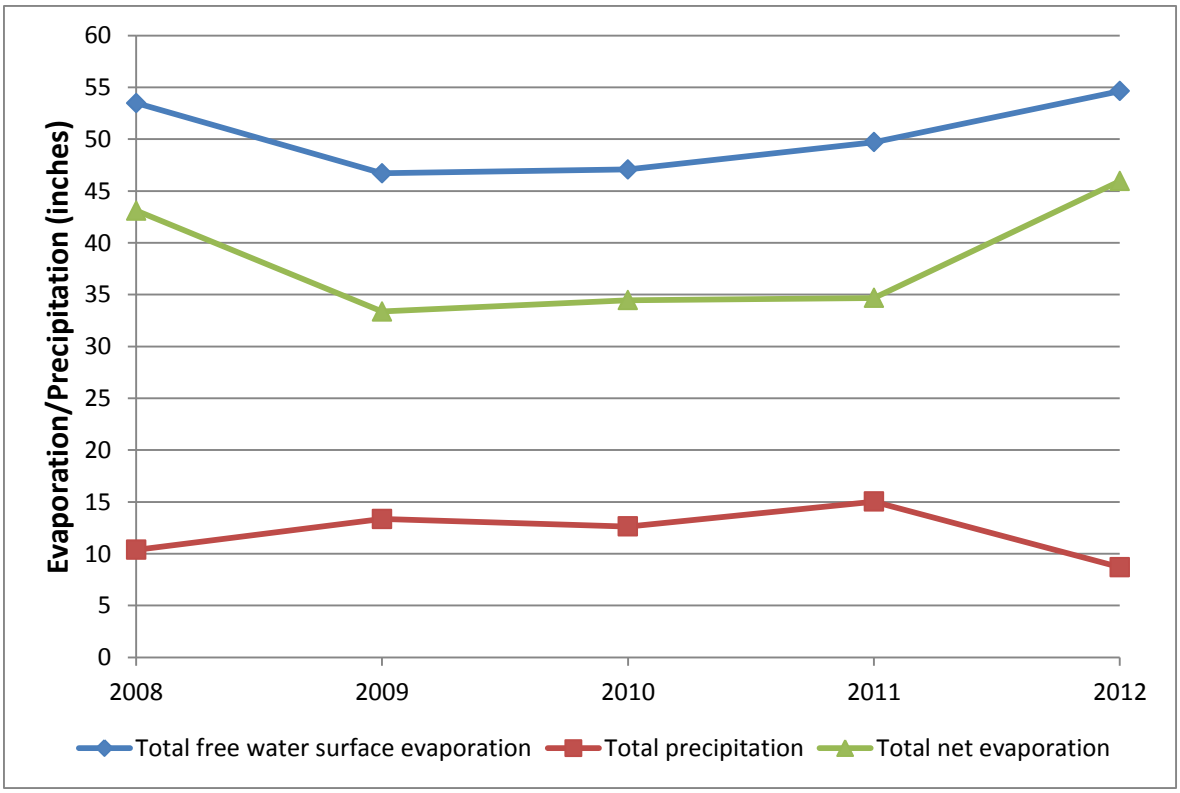

Figure 4-1. Historical annual evaporation and precipitation data.

Although rigorous measurements of the sludge in the lagoons are not available, two important sets of information are useful for evaluating the actual capacity of the existing lagoon/drying bed system:

- Appendix A includes information received from the City related to sludge hauling invoices. Figure 4-2 summarizes this information and derives estimates of sludge volumes hauled from the lagoons.
- Figure 4-3 summarizes the information on daily pump-back volumes from the filtrate recovery tank. On average, for the period January 2012 through September 30 2013, the daily pump back volumes were 31,167 gallons per day, or 4,124 gallons per MGD of raw water flow.

Based on the climatic data, the sludge hauling information and the filtrate pump-back volumes, Table 4-1 presents estimated accumulated sludge concentrations in the lagoons and calculated pump-back volumes. Based on this information, the sludge concentrations achieved in the lagoons before hauling were fairly consistent at approximately 2-percent. The calculated decanted volumes returned to the plant are within approximately 10-percent the estimated volumes derived from plant data. Therefore, it appears that the method of calculation of sludge dewatering within the existing lagoon/drying bed system is consistent with the available information, and future capacity determinations can proceed on a similar basis.

Use of contents on this sheet is subject to the limitations specified at the beginning of this document.
TM No 1 - 1-8-14.docx

Cost per Load = $ **923** Volume per tanker = **6,500** gallons

Date	Expense $	Number of Loads	Volume Removed gallons	Cumula-tive
3/25/10	5,390	5.84	37,958	
6/9/10	17,783	19.27	125,231	
6/9/10	30,845	33.42	217,218	
7/12/10	15,484	16.78	109,042	
8/9/10	3,768	4.08	26,532	
8/25/10	6,553	7.10	46,148	
10/28/10	4,775	5.17	33,627	
11/29/10	8,000	8.67	56,338	
12/31/10	13,312	14.42	93,746	707,883
6/6/11	67,565	73.20	475,810	
6/22/11	13,691	14.83	96,415	
6/27/11	46,793	50.70	329,528	
8/2/11	4,074	4.41	28,690	930,444
5/1/12	8,538	9.25	60,123	
5/24/12	4,063	4.40	28,610	
6/5/12	25,392	27.51	178,815	
6/5/12	21,095	22.85	148,554	
6/13/12	1,128	1.22	7,940	
6/14/12	17,537	19.00	123,500	
6/21/12	5,538	6.00	39,000	586,543
9/11/12	6,741	7.30	47,475	
9/11/12	4,151	4.50	29,232	
9/11/12	62	0.07	439	
9/18/12	5,087	5.51	35,825	
9/18/12	5,587	6.05	39,342	
9/27/12	2,653	2.87	18,682	
10/4/12	5,235	5.67	36,868	
10/24/12	718	0.78	5,055	
10/24/12	37	0.04	261	
10/24/12	111	0.12	783	
10/24/12	3,361	3.64	23,669	
12/6/12	9,965	10.80	70,174	307,805
6/25/13	19,432	21.05	136,845	
6/26/13	17,748	19.23	124,986	
7/2/13	9,264	10.04	65,239	
7/11/13	10,878	11.79	76,606	
8/8/13	2,838	3.07	19,986	
8/28/13	839	0.91	5,908	
8/28/13	1,290	1.40	9,085	
9/11/13	1,290	1.40	9,085	
9/18/13	11,689	12.66	82,317	
9/18/13	10,452	11.32	73,606	
9/18/13	5,805	6.29	40,880	
9/18/13	1,290	1.40	9,085	
9/18/13	23,010	24.93	162,042	
9/18/13	26,279	28.47	185,063	
10/2/13	273	0.30	1,923	1,002,655

South lagoons = 528,000 gallons
North lagoons = 411,000 gallons
Total = 939,000 gallons

Figure 4-2. Summary of sludge volumes hauled from lagoons.

Use of contents on this sheet is subject to the limitations specified at the beginning of this document.
TM No 1 - 1-8-14.docx

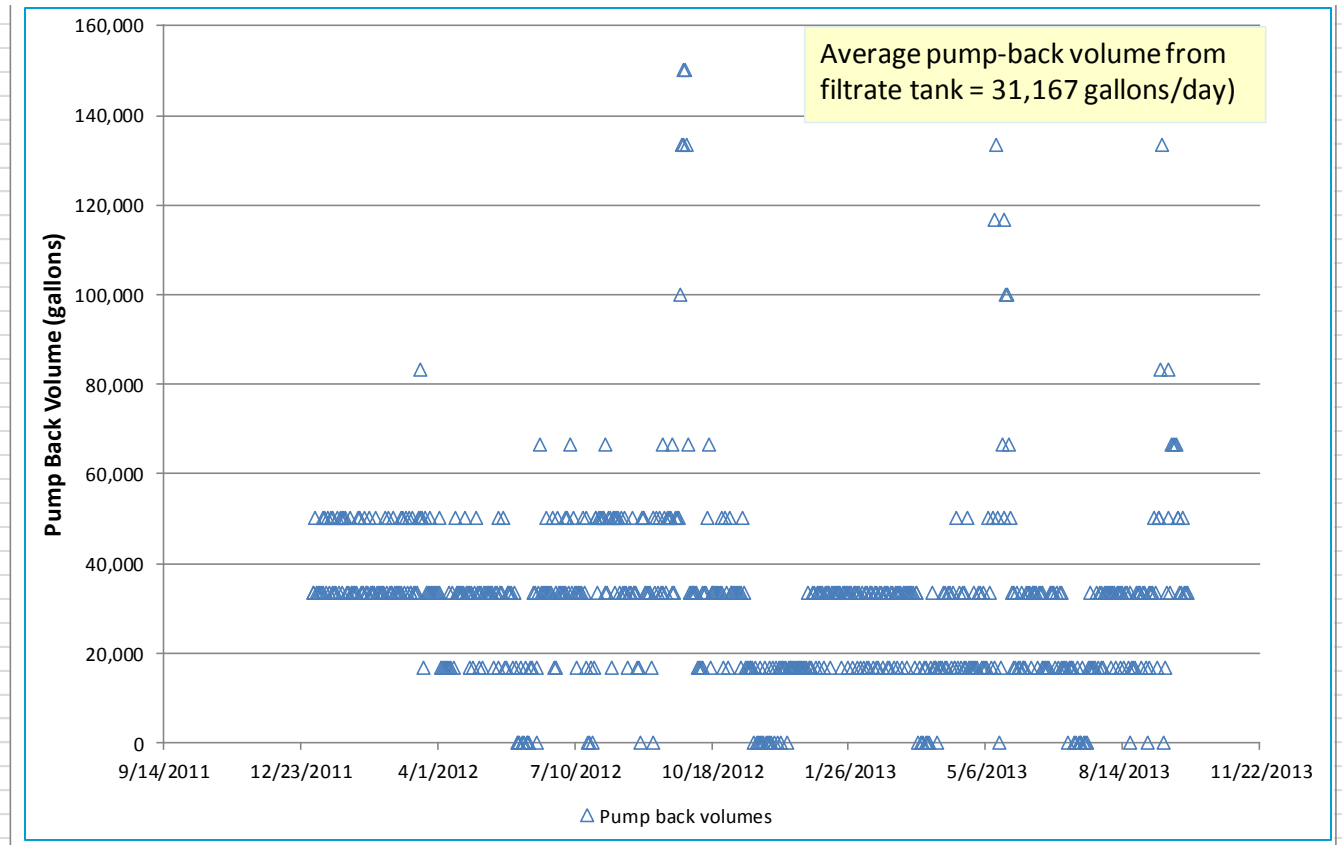

Figure 4-3. Daily pump-back volumes from the filtrate recovery tank.

Table 4-1. Calculated sludge concentrations and pump-back decant volumes

Period Start	Period End	Total Days	Sludge Applied (lb)[1]	Calculated Volume (MG)[2]	Total Evaporation (inches)	Total Precipitation (inches)	Net evaporation (inches)	Volume evaporated (MG)	Net volume after evaporation (MG)	Tankered volume removed (MG)[3]	Estimated concentration removed (%)	Volume removed/ Volume applied	Calculated volume decanted (MG)	Estimated volume pumped back from filtrate recovery tank (MG)[4]
1/1/2011	8/2/2011	213	148,913	9.92	28.2	10.4	17.8	0.37	9.55	0.93	1.92	0.0938	8.6	6.6
1/1/2011	6/21/2012	537	268,407	17.88	74.7	19.1	55.6	1.16	16.72	1.52	2.12	0.0848	15.2	16.7
1/1/2011	12/6/2012	705	357,493	23.81	102.6	23.5	79.1	1.64	22.17	1.83	2.35	0.0766	20.3	22.0
1/1/2011	10/2/2013	1005	498,712	33.22	149.3	30.7	118.6	2.46	30.76	2.83	2.12	0.0851	27.9	31.3

[1]Determined from plant raw water flow, turbidity and coagulant usage
[2]Based on average sludge concentration of 0.18% (determined from plant sludge discharge flows)
[3]Data taken from sludge hauling invoices - see Appendix A.
[4]Determined from 2012-2013 plant data and average pump-back of 31,167 gallons/day

Historical (calculated) sludge production values were used as the basis for evaluating the existing lagoon/drying bed system, as follows:

- Referring to Figure 3-9 and Table 3-1, the annual average unit sludge productions were:
  - 2008: 49.5 lb/MG water treated
  - 2009: 55.2 lb/MG water treated
  - 2010: 49.6 lb/MG water treated
  - 2011: 50.6 lb/MG water treated
  - 2012: 42.9 lb/MG water treated

Use of contents on this sheet is subject to the limitations specified at the beginning of this document.
TM No 1 - 1-8-14.docx

  - 2013 (through May only): 40.8 lb/MG water treated
- Based on these results, 2009 was selected as the basis for the calculations
- The peak day flow in 2009 was 28 mgd (refer to Figure 3-1)
- The daily (calculated) sludge production varied from 193 lb/d (occurring on 11/30/2009) to 2,729 lb/d (occurring on 5/20/2009), with an annual total of 244,390 lb (all as dry solids) in 2009.
- The daily sludge production values for the WTF operating at 35 mgd were determined by applying the factor (35/28 = 1.25) to each of the 365 days of daily sludge production values for 2009. Therefore, the minimum sludge production would be 1.25x193 = approximately 240 lb/d and the maximum 2,729x1.25 = approximately 3,400 lb/d. The annual sludge production would be 244,390x1.25 = approximately 305,000 lb.
- Similarly, for a 50 mgd WTF capacity, the minimum sludge production would be approximately 340 lb/d, the maximum 4,800 lb/d and the annual sludge production would be 433,000 lb.

Based on the analyses shown in Table 4-1, it is assumed that plant stormwater diverted to the lagoons is pumped back to the facility as it is now. At the moment, given that stormwater flows are not quantified and based on the results shown in Table 4-1, this is a reasonable assumption.

The scheme of the calculation sequence is as follows:

- The annual sludge production was selected.
- A range of applied sludge concentrations were evaluated (from current at approximately 0.18%, to 6% dry solids).
- The annual sludge application was expressed as mass of dry solids per unit area of lagoon.
- The applied sludge mass was converted to a sludge depth, dependent on the applied solids concentration.
- The final sludge depth was determined as the difference between the applied sludge depth (over the whole year), plus the annual precipitation, minus the annual evaporation.

Table 4-2 summarizes the results of the drying areas required for applied thickened sludge concentrations of current (0.18%), 2 percent dry solids, 4 percent and 6 percent, representing the range of expected thickened sludge concentrations from different thickening devices. The area requirements for current sludge production, approximately 35 mgd WTF production, and 50 mgd WTF production, are included. The results for two scenarios are also included: the first assumes that sludge is only removed and hauled once per year. The second assumes two removal and hauling events per year. In the second scenario less overall drying area is required since the lagoons can be filled and removed at lower final concentrations.

Use of contents on this sheet is subject to the limitations specified at the beginning of this document.
TM No 1 - 1-8-14.docx

Table 4-2. Lagoon/Drying-Bed Capacity [1]				
Number of Clean-Out and Hauling Events per Year	Facility Capacity	Annual Sludge Production	Applied Thickened Sludge Concentration	Lagoon Area Required
1	Current	244,390 lb DS	Current[2]	50,000 ft^2
1	35 mgd	303,190 lb DS	2% DS	37,000 ft^2
1	35 mgd	303,190 lb DS	4% DS	18,500 ft^2 [3]
1	35 mgd	303,190 lb DS	6% DS	17,000 ft^2 [4]
1	50 mgd	433,130 lb DS	2% DS	53,000 ft^2
1	50 mgd	433,130 lb DS	4% DS	26,500 ft^2 [3]
1	50 mgd	433,130 lb DS	6% DS	24,500 ft^2 [4]
2	Current	244,390 lb DS	Current[2]	25,000 ft^2
2	35 mgd	303,190 lb DS	2% DS	23,500 ft^2
2	35 mgd	303,190 lb DS	4% DS	12,000 ft^2
2	35 mgd	303,190 lb DS	6% DS	8,000 ft^2 [3]
2	50 mgd	433,130 lb DS	2% DS	34,000 ft^2
2	50 mgd	433,130 lb DS	4% DS	17,000 ft^2
2	50 mgd	433,130 lb DS	6% DS	11,500 ft^2 [3]

[1]Assumes cake hauling is limited to solids concentration that are either less than 6% or greater than 15% dry solids (DS).

[2]Assumes feed sludge is 0.18% DS.

[3]Dilution required to pump >6% sludge.

[4]Area required to achieve >15%.

Table 4-2 demonstrates the results and the benefits of pre-thickening all the sludge conveyed to the lagoon/drying beds. In summary, the results show the following:

- Under current conditions:
  - Assuming that sludge can be thickened within the lagoon/beds by decanting (as it is now), two clean-out and hauling events would be required per year.
- At a 35 mgd WTF Operating Rate:
  - At 2% applied sludge concentration, two clean-out and hauling events per year would be required, using both of the north, and one of the south lagoons.
  - At 4% applied sludge concentration, both of the north, and one of the south lagoons would be required for a single clean-out and hauling event per year. With two clean-out and hauling events per year, both of the north beds, and none of the south lagoons would be required.
  - At 6% applied sludge concentration, both of the north, and one of the south lagoons would be required for a single clean-out and hauling event per year. With two clean-out and hauling events per year, one of the south, and none of the north lagoons would be required.
- At a 50 mgd WTF Operating Rate:

Use of contents on this sheet is subject to the limitations specified at the beginning of this document.

- At 2% applied sludge concentration, the existing lagoon/beds would not have sufficient capacity for a single clean-out and hauling event per year. With two clean-out and hauling events per year, all of the lagoon/beds (both of the south and both of the north) would be required. This would not allow one of the south lagoons to be maintained empty and available for plant operations.
- At 4% applied sludge concentration, two clean-out and hauling events per year would be required, using both of the north, and one of the south lagoons.
- At 6% applied sludge concentration, both of the north, and one of the south lagoons would be required for a single clean-out and hauling event per year. With two clean-out and hauling events per year, both of the north beds, and none of the south lagoons would be required.

Despite the reduced overall area requirements by instituting two clean-out and hauling events per year, the City may consider this to be onerous, both to the WTF and to the surrounding population, although currently there are two sludge cleaning events per year. Based on the results summarized in Table 4-2, pre-thickening the sludge before application to the lagoon/drying bed system would be advantageous and essential under future loading conditions. As capacity increases further, mechanical dewatering may also be advantageous.

Section 5: Feasibility of Utilizing the Existing DAF for Thickening

Backwash water from the filters is first equalized in the spent backwash equalization basin, then treated in a rectangular dissolved air flotation (DAF) tank. Solids are separated from the flow and clarified washwater is returned to the head of the facility. The surface area of the DAF tank is 164 ft^2.

One potential possibility for thickening sludge from the sedimentation tanks is to co-thicken both filter backwash and sedimentation sludge using the same existing DAF system. Table 5-1 presents the results of calculations comparing current operation with backwash alone and jointly with sedimentation sludge.

Although solids loadings increase markedly, the loading rates up to a facility operating rate of approximately 35 mgd are still within reasonable limits for a DAF thickener. Therefore, solid loading rates would be acceptable under a co-thickening scenario.

Although hydraulic loadings become high at a facility operating rate of 35 mgd, it is possible that the DAFs will still function effectively, provided the air/solids ratio is sufficient. However, Table 5-1 shows that under a co-thickening scenario, the air/solids ratio become very low, too low for effective operation. Therefore, without significant upgrades to the existing DAF system, co-thickening backwash and sedimentation sludges is not feasible.

Figure 5-1 shows the style of lightweight sludge scraper assembly installed in the existing DAF. For recovering the relatively light solids loads in the backwash water, this scraper assembly is adequate. However, in the case of co-thickening both backwash and sedimentation sludge, a more robust scraper assembly, such as that shown in Figure 5-2 for a sludge thickening application, would be essential.

Use of contents on this sheet is subject to the limitations specified at the beginning of this document.
TM No 1 - 1-8-14.docx

Table 5-1. DAF Operation Under Different Scenarios			
Parameter	Current Flows With Back-wash Only[1]	Current Flows with All Sludge	35 mgd with All Sludge
Maximum Solids Loading (lb/ft^2.d)	2.5	19.5	24.0
Maximum Hydraulic Loading (gpm/ft^2)	3.1	4.8	6.0[2]
Minimum Air/Solids Ratio (lb/lb)	0.22	0.008[3]	0.005[3]

[1]Current DAF also sized adequately for backwash recovery at 35 mgd and 50 mgd facility operating rate.

[2]Maximum hydraulic loading applied elsewhere for activated sludge treatment was 5.4 gpm/ft2 at an air/solids ratio of 0.03 lb/lb. Maximum hydraulic loading for water facility sludge may be lower.

[3]Air/solids ratios would be too low to capture solids for flotation.

Figure 5-1. Lightweight style of scraper assembly installed in existing DAF.

Use of contents on this sheet is subject to the limitations specified at the beginning of this document.
TM No 1 - 1-8-14.docx

Figure 5-2. Heavier duty sludge thickening scraper assembly required for thickening duty.

Therefore, from the above considerations, the improvements required to the existing DAF system to allow co-thickening backwash and sedimentation sludges are as follows:

- Replace saturation system to provide an adequate air/solids ratio.
- Replace sludge scraper assembly with a system adequate for heavy thickening duty.
- The existing backwash equalization system will be inadequate for the high volume of sedimentation sludge. Therefore a new, larger equalization basin will likely be required.
- Existing DAF sludge transfer pumps would be inadequate. Therefore a new pumping system would be required.

In addition to the above, an overriding consideration is that by changing operation to a dual function back-wash recovery and sludge thickening duty, neither of these functions would be optimal. It would appear preferable to maintain the existing DAF for the intended purpose of recovering water of suitable quality to be recycled to the head of the facility to produce drinking water.

The sedimentation sludge should be processed separately in a dedicated thickener.

Section 6: Oil-Water Separator Discharges

The oil-water separator is located on the southwest side of the property and collects waste from:

- Storm-drains
- Hydropower floor drains
- Pipe gallery floor drains, including the following:

Use of contents on this sheet is subject to the limitations specified at the beginning of this document.

  - Drainage from various instruments.
  - Wash-down.
  - Oil spilled from filling of air compressors (noted as a major contributor of oil to the separator).
- Floor drains at the floc drives, from seepage from the seals/packing.

The oil-water separator is a two-cell system. The first cell is the oil-water separator, with the second cell acting as a wetwell for two, 150 gallons per minute (gpm) submersible pumps. Pumps convey water to the south end of the northern drying beds. When the pumps operate, it has been observed that the sludge in the drying beds is stirred up, and pushed to the decant. Oil slicks have been observed, and generally are conveyed directly to the decant due to the proximity of the piping to the decant box. Decant water is conveyed to the filter-to-waste recovery tank, which is then pumped to the spent backwash equalization tank and then to the DAF. This water is then returned to the head of the facility. Water from the oil-water separator can also be directed to the south lagoons through the sludge piping if the north drying beds are not in service, but this is not normal operation.

Oil is pumped out of the separator roughly quarterly. During heavy precipitation, it may be cleaned sooner, although there does not appear to be a regular schedule or SOP for this operation.

Discussions with operating personnel have suggested the following remedial measures:

- Intercept the instrument drains and route them directly to the spent backwash equalization tank.
- Do not collect stormwater into this facility. Pending confirmation of the feasibility, allow stormwater to run off the site rather than convey it for treatment.
- Intercept the oil-water separator discharge lines near the north drying beds and route them to the existing decant line manhole to take water directly to the filtrate recovery tank.

These alternatives should be developed further during plant upgrades. However, in the meantime it is important to initiate a monitoring program to regularly characterize flow as well as to quantify the concentrations of oils and grease.

Section 7: Conclusions

Review of the existing operations data indicates that the Betasso WTF is running well, and there are limited opportunities for reducing solids production. Any optimization that does take place would be done from the standpoint of improving water quality, and not primarily reducing solids production.

For planning purposes, the solids concentration from the sedimentation basins should be assumed to be similar to current operations, at approximately 0.2 percent dry solids. It is possible that some optimization could occur, but indications are that the Clari-Trac© system is being operated appropriately and that higher sludge concentrations would cause operational issues. The existing lagoon/drying bed system is overloaded. To continue to use this system, thickening of all the sludge to at least 4 percent dry solids concentration would be advantageous.

Increasing feed solids to 4 percent would allow the existing solids treatment facilities to handle flows up to a WTF operating rate of 35 mgd with a single annual clean-out and hauling event. As flows increase to an operating rate of 50 mgd, feed solids concentration would have to increase to close to 6 percent. Feed solids concentrations of 4 percent are easily achievable with a thickening process alone. Concentrations of 6 percent are nearing best-case operation of thickening facilities and would require piloting to verify design criteria. Mechanical dewatering may become necessary as WTF flows increase beyond a rated capacity of 35

Use of contents on this sheet is subject to the limitations specified at the beginning of this document.
TM No 1 - 1-8-14.docx

mgd. Drying area requirements can be reduced by instituting two clean-out and sludge hauling events per year, although the City's intent is to reduce truck traffic volume as far as possible.

Using the existing filter backwash recovery DAF to co-thicken both backwash water and sedimentation basin sludge is not feasible without extensive upgrades to the overall system. An overriding consideration is that by changing operation to dual-function backwash recovery and sludge thickening duty, neither of these functions would be optimal. Maintaining the existing DAF for the intended purpose of recovering water of suitable quality to be recycled to the head of the facility to produce drinking water is recommended. The sedimentation sludge should be processed separately in a dedicated thickener.

Appropriate processing of the discharge from the oil-water separator requires further investigation. Preliminarily, appropriate mitigation measures include intercepting instrument drains to route this flow directly to the spent backwash equalization tank; allow the stormwater that is conveyed to the oil-water separator to run off-site together with other stormwater that already does so; intercept the oil-water separator discharge lines to route them to the filtrate recovery tank. A monitoring program to characterize and quantify flows and water quality is recommended.

Depending on the results of subsequent thickening and dewatering investigations, to be presented in a subsequent TM, a phased approach to residuals handling at the Betasso WTF may be recommended. In that case, thickening could be implemented as a first step. As flows continue to increase and thickening is no longer adequate for solids handling, mechanical dewatering would be added at a later stage.

Use of contents on this sheet is subject to the limitations specified at the beginning of this document.

Attachment A: Sludge Hauling Invoices

Use of contents on this sheet is subject to the limitations specified at the beginning of this document.

2010-2013 LWM Expenses

OCA	OBJ3	Fiscal Yr	3 Title	Cur Doc No	Sfx	Post Dt	Pmt Vendor Name	Invoice No	Invoice Desc	EXP	BALANCE
344477	5614	2010	Solid Waste Managemer	DV353603	1	20100325	LEFT HAND EXCAVATING	03162010	Betasso Water Treatment Plant	$5,390.00	-$5,390.00
				DV358336	1	20100609	LEFT HAND EXCAVATING	05202010	Betasso Water Treatment	$17,782.83	-$17,782.83
				DV362060	1	20100809	LEFT HAND EXCAVATING	08052010	Betasso Water Treatment Plant	$3,767.50	-$3,767.50
				DV363140	1	20100825	LEFT HAND EXCAVATING	08172010	Betasso Water Treatment Plant	$6,552.86	-$6,552.86
				DV367493	1	20101028	LEFT HAND EXCAVATING	10152010	Betasso Water Treatment Plant	$4,774.54	-$4,774.54
				DV369363	2	20101129	LIQUID WASTE MANAGEMENT, INC.	4947	11/8-11/12/10; Betasso WTP	$8,000.00	-$8,000.00
				DV358327	1	20100609	PARKER AG SERVICES	J001676	Betasso Water Treatment	$30,844.54	-$30,844.54
				DV360246	1	20100712	PARKER AG SERVICES	J001744	Betasso Water Treatment Plant Cust# BOULCI	$15,484.30	-$15,484.30
				JV027618	1	20101231	NULL	NULL	Accrue 372271 Liquid Waste Mngmt	$13,312.00	-$13,312.00
										$105,908.57	-$105,908.57
		2011	Solid Waste Managemer	DV384895	1	20110802	LEFT HAND EXCAVATING	7272011	Betasso Water Treatment Plant	$4,073.96	-$4,073.96
				DV386566	1	20110830	LEFT HAND EXCAVATING	8232011	Betasso Water Treatment Plant	$4,215.00	-$4,215.00
				DV372271	1	20110111	LIQUID WASTE MANAGEMENT, INC.	5036	Betasso Water Treatment Plant	$13,312.00	-$13,312.00
				DV382444	1	20110622	LIQUID WASTE MANAGEMENT, INC.	5438	NULL	$13,690.89	-$13,690.89
				DV382654	1	20110627	LIQUID WASTE MANAGEMENT, INC.	5455	Betasso Water Treatment Plant	$46,793.22	-$46,793.22
				BP050596	386	20110101	NULL	NULL	NULL	$0.00	$120,945.00
				JV027620	1	20110121	NULL	NULL	Accrue 372271 Liquid Waste Mngmt	-$13,312.00	$13,312.00
				JV028416	4	20110606	NULL	NULL	acct posting errors – change to correct accts	$67,565.00	-$67,565.00
				JV028738	1	20110830	NULL	NULL	Left Hand Inv DV386566 move expense	-$4,215.00	$4,215.00
										$132,123.07	-$11,178.07
		2012	Solid Waste Managemer	DV402287	1	20120501	LEFT HAND EXCAVATING	4252012	Betasso Water Treatment Plant	$8,537.50	-$8,537.50
				DV405190	1	20120613	LEFT HAND EXCAVATING	06042012	Betasso Water Treatment Plant	$1,127.50	-$1,127.50
				DV416729	1	20121206	LEFT HAND EXCAVATING	NOV6-13	Betasso Water Treatment Plant	$9,964.70	-$9,964.70
				DV403945	1	20120524	LIQUID WASTE MANAGEMENT, INC.	6167	Betasso Water Treatment Plant	$4,062.68	-$4,062.68
				DV404606	1	20120605	LIQUID WASTE MANAGEMENT, INC.	6190	Betasso Water Treatment Plant	$25,391.73	-$25,391.73
				DV404606	2	20120605	LIQUID WASTE MANAGEMENT, INC.	6200	Betasso Water Treatment Plant	$21,094.67	-$21,094.67
				DV405390	1	20120614	LIQUID WASTE MANAGEMENT, INC.	6216	Betasso Water Treatment Plant	$17,537.00	-$17,537.00
				DV405860	1	20120621	LIQUID WASTE MANAGEMENT, INC.	6235	Betasso Water Treatment Plant	$5,538.00	-$5,538.00
				DV410917	3	20120911	LIQUID WASTE MANAGEMENT, INC.	6430	Betasso Water Treatment Plant	$6,741.40	-$6,741.40
				DV410917	2	20120911	LIQUID WASTE MANAGEMENT, INC.	6417	Betasso Water Treatment Plant	$4,151.00	-$4,151.00
				DV410917	1	20120911	LIQUID WASTE MANAGEMENT, INC.	6455	Betasso Water Treatment Plant	$62.40	-$62.40
				DV411374	1	20120918	LIQUID WASTE MANAGEMENT, INC.	6450	63rd St Water Treatment Plant	$5,087.20	-$5,087.20
				DV411374	2	20120918	LIQUID WASTE MANAGEMENT, INC.	6461	63rd St Water Treatment Plant	$5,586.60	-$5,586.60
				DV412089	1	20120927	LIQUID WASTE MANAGEMENT, INC.	6478	Betasso Water Treatment	$2,652.80	-$2,652.80
				DV412526	1	20121004	LIQUID WASTE MANAGEMENT, INC.	6469*	DP006316	$5,235.20	-$5,235.20
				DV414081	4	20121024	LIQUID WASTE MANAGEMENT, INC.	6481	Betasso Water Treatment Plant	$3,361.00	-$3,361.00
				DV414081	3	20121024	LIQUID WASTE MANAGEMENT, INC.	6506	Betasso Water Treatment Plant	$111.15	-$111.15
				DV414081	1	20121024	LIQUID WASTE MANAGEMENT, INC.	6493	63rd St Water Treatment Plant	$717.80	-$717.80
				DV414081	2	20121024	LIQUID WASTE MANAGEMENT, INC.	6505	63rd St Water Treatment Plant	$37.05	-$37.05
				BP050652	406	20120101	NULL	NULL	NULL	$0.00	$122,519.00
										$126,997.38	-$4,478.38

2010-2013 LWM Expenses

OCA	OBJ3	Fiscal Yr	3 Title	Cur Doc No	Sfx	Post Dt	Pmt Vendor Name	Invoice No	Invoice Desc	EXP	BALANCE
344477	5614	2013	Solid Waste Managemer	DV431641	1	20130808	LEFT HAND EXCAVATING	LHE1265	Betasso Water Treatment Plant	$2,837.50	-$2,837.50
				DV428914	1	20130625	LIQUID WASTE MANAGEMENT, INC.	6992	Betasso Water Treatment Plant	$19,432.00	-$19,432.00
				DV428968	1	20130626	LIQUID WASTE MANAGEMENT, INC.	7008	Betasso Water Treatment Plant	$17,748.00	-$17,748.00
				DV429373	1	20130702	LIQUID WASTE MANAGEMENT, INC.	7024	Betasso Water Treatment Plant	$9,264.00	-$9,264.00
				DV429953	1	20130711	LIQUID WASTE MANAGEMENT, INC.	7041	Betasso Water Treatment	$10,878.00	-$10,878.00
				DV432682	2	20130828	LIQUID WASTE MANAGEMENT, INC.	7141	Betasso Water Treatment Plant	$838.50	-$838.50
				DV432682	1	20130828	LIQUID WASTE MANAGEMENT, INC.	7176	Betasso Water Treatment Plant	$1,290.00	-$1,290.00
				DV433540	1	20130911	LIQUID WASTE MANAGEMENT, INC.	7200	Betasso WTP	$1,290.00	-$1,290.00
				DV433874	1	20130918	LIQUID WASTE MANAGEMENT, INC.	7055	NULL	$11,689.00	-$11,689.00
				DV433876	1	20130918	LIQUID WASTE MANAGEMENT, INC.	7089	NULL	$10,452.00	-$10,452.00
				DV433808	1	20130918	LIQUID WASTE MANAGEMENT, INC.	7227	NULL	$5,805.00	-$5,805.00
				DV433807	1	20130918	LIQUID WASTE MANAGEMENT, INC.	7100	NULL	$1,290.00	-$1,290.00
				DV433836	1	20130918	LIQUID WASTE MANAGEMENT, INC.	7106	NULL	$23,010.00	-$23,010.00
				DV433875	1	20130918	LIQUID WASTE MANAGEMENT, INC.	7072	NULL	$26,279.00	-$26,279.00
				DV434741	1	20131002	LIQUID WASTE MANAGEMENT, INC.	7225	Betasso Water Treatment Plant	$273.00	-$273.00
				BP050712	369	20130101	NULL	NULL	NULL	$0.00	$157,464.00
										$142,376.00	$15,088.00
										Grand Tot: $507,405.0	Grand Tot: -$106,477.02

From: Slater, Esther [mailto:SlaterE@bouldercolorado.gov]
Sent: Wednesday, November 06, 2013 9:59 AM
To: Bratby, John
Subject: RE: Liquid Waste Management invoice for 2010-2011

John,
Please see attached spreadsheet. Our IT department went in and edited my query and added a couple of fields that I think will help in understanding more some of the different line items. If you need more clarification I now have a contact person and hopefully it won't take so long to get answers.

DV = items I put in system to get a check cut
JV = are usually done to transfer $ from one acct code to another
BP = I don't know what this is
NULL in the Vendor Name or Invoice Desc. Means nothing was entered

From: Bratby, John [mailto:JBratby@brwncald.com]
Sent: Tuesday, November 05, 2013 4:32 PM
To: Slater, Esther
Subject: RE: Liquid Waste Management invoice for 2010-2011

Great.....Thanks Esther..... John.

From: Slater, Esther [mailto:SlaterE@bouldercolorado.gov]
Sent: Tuesday, November 05, 2013 4:30 PM
To: Bratby, John
Subject: RE: Liquid Waste Management invoice for 2010-2011

I spoke with our IT department and they are looking into the query I wrote. Their suspension is that null means there isn't a vendor that was assigned to that charge. Which doesn't make sense to me at all. But hopefully I can get a response tomorrow. I at least got someone to really look at it now. Let you know when I hear more.

From: Bratby, John [mailto:JBratby@brwncald.com]
Sent: Tuesday, November 05, 2013 10:07 AM
To: Slater, Esther
Subject: RE: Liquid Waste Management invoice for 2010-2011

Thanks Esther..... it's actually become urgent..... John.

From: Slater, Esther [mailto:SlaterE@bouldercolorado.gov]
Sent: Tuesday, November 05, 2013 10:00 AM
To: Bratby, John
Subject: RE: Liquid Waste Management invoice for 2010-2011

Oh, no I contacted our IT department and they have not gotten back with me. I will give them a nudge and see if can help. Thanks for the reminder.

From: Bratby, John [mailto:JBratby@brwncald.com]
Sent: Tuesday, November 05, 2013 9:36 AM
To: Slater, Esther
Subject: RE: Liquid Waste Management invoice for 2010-2011

Hi Esther: Any luck with anyone? John.

From: Slater, Esther [mailto:SlaterE@bouldercolorado.gov]
Sent: Wednesday, October 23, 2013 9:25 AM
To: Bratby, John
Subject: RE: Liquid Waste Management invoice for 2010-2011

Haven't forgotten you, but the last person I asked was stumped. So I'm going to pass on the question to someone else. Let you know what I find out. Sorry for the delay.
Esther

From: Slater, Esther [mailto:SlaterE@bouldercolorado.gov]
Sent: Friday, October 18, 2013 9:12 AM
To: Bratby, John
Subject: RE: Liquid Waste Management invoice for 2010-2011

Not sure how to answer your questions, I will ask someone who knows more about the data base than me and get back with you.

From: Bratby, John [mailto:JBratby@brwncald.com]
Sent: Thursday, October 17, 2013 2:34 PM
To: Slater, Esther
Subject: RE: Liquid Waste Management invoice for 2010-2011

Esther: a clarification please: There are entries "Null" on 8/30/11 for -$4215. Does this cancel the earlier entry for 8/30/11 for same amount?

On 6/6/11 there's an invoice for "Null" for $67,565 – does this need to be included as a sludge hauling cost?

On 1/11/11 there's an entry for Liquid Waste for $13,312. On 1/21/11 there's -$13,312 for "Null" then on 12/31/10 there's an entry for "Null" for $13,312. How should I interpret all these entries? Thanks.....

From: Slater, Esther [mailto:SlaterE@bouldercolorado.gov]
Sent: Thursday, October 17, 2013 1:39 PM
To: Bratby, John
Subject: RE: Liquid Waste Management invoice for 2010-2011

That would be correct

From: Bratby, John [mailto:JBratby@brwncald.com]
Sent: Thursday, October 17, 2013 1:08 PM
To: Slater, Esther
Subject: RE: Liquid Waste Management invoice for 2010-2011

Thanks Esther – was there nothing between 8/30/11 and 5/1/12? John.

From: Slater, Esther [mailto:SlaterE@bouldercolorado.gov]
Sent: Thursday, October 17, 2013 12:20 PM
To: Bratby, John
Subject: RE: Liquid Waste Management invoice for 2010-2011

I did a query in the system by year. So the system will pull up anything that was paid with that account code in that year. If you don't see anything till 3/25/10 it just means there was nothing till then.

From: Bratby, John [mailto:JBratby@brwncald.com]
Sent: Thursday, October 17, 2013 12:18 PM
To: Folle, Steve; Slater, Esther
Cc: Stewart, Niall; Hill, Chad
Subject: RE: Liquid Waste Management invoice for 2010-2011
Importance: High

Thanks Steve and Esther. Just to confirm..... we now have with this data you just sent from 3/25/10 through 8/30/11. Previously you had sent 5/1/12 through 12/6/12.

I need to make sure I have continuous data from 3/25/10 through 12/6/12 so, please would you confirm there were no tanker loads between 8/30/11 and 5/1/12? Thanks..... John.

From: Folle, Steve [mailto:FolleS@bouldercolorado.gov]
Sent: Thursday, October 17, 2013 10:42 AM
To: Bratby, John
Cc: Slater, Esther; Stewart, Niall; Hill, Chad
Subject: FW: Liquid Waste Management invoice for 2010-2011

John, here is the info for 2010-2011

Thanks again Esther.

From: Slater, Esther
Sent: Thursday, October 17, 2013 10:31 AM
To: Folle, Steve
Subject: Liquid Waste Management invoice for 2010-2011

Hope this helps

Appendix E: TM2 Thickening and Dewatering Alternatives Identification and Screening.

Brown AND Caldwell

1697 Cole Blvd., Suite 200
Golden, CO 80401
Tel: 303-239-5400
Fax: 303-239-5454

Technical Memorandum

Prepared for: City of Boulder

Project Title: Betasso Water Treatment Facility Residuals Study

Project No: 144528

Technical Memorandum [No. 2]

Subject: Thickening and Dewatering Alternatives Identification and Screening

Date: January 23, 2014

To: Steve Buckbee, Utilities Project Manager

From: Chad Hill, Project Manager

Copy to: Project Team

Prepared by: _____

John Bratby, Senior Process Engineer

Reviewed by: _____

Chad Hill, Project Manager

Limitations:

This document was prepared solely for City of Boulder in accordance with professional standards at the time the services were performed and in accordance with the contract between City of Boulder and Brown and Caldwell dated June 4, 2013. This document is governed by the specific scope of work authorized by City of Boulder; it is not intended to be relied upon by any other party except for regulatory authorities contemplated by the scope of work. We have relied on information or instructions provided by City of Boulder and other parties and, unless otherwise expressly indicated, have made no independent investigation as to the validity, completeness, or accuracy of such information.

Table of Contents

List of Figures iii
List of Tables iii
1. Introduction 1
2. Evaluation Criteria 2
3. Thickening Alternatives 2
3.1 Gravity Thickeners 3
3.2 Gravity Belt Thickeners 3
3.3 Rotary Drum Thickeners 4
3.4 Dissolved-Air Flotation Thickeners 5
3.5 Comparative Evaluation of Thickening Technologies 6
4. Dewatering Alternatives 7
4.1 Centrifuge 7
4.2 Screw Press 8
4.3 Belt Filter Press 9
4.4 Rotary Press 10
4.5 Comparative Evaluation of Dewatering Technologies 11
5. Recommendations 12
5.1 Thickening Recommendations 12
5.2 Dewatering Recommendations 12
5.3 Piloting Recommendations 12
Attachment A: Manufacturer List ..... A
Attachment B: Andritz Separation Inc. ..... B
Attachment C: BDP Industries, Inc. C
Attachment D: Charter Machine Company ..... D
Attachment E: CUT Canada ..... E
Attachment F: Flottweg Separation ..... F
Attachment G: FKC Co., Ltd. ..... G
Attachment H: Fournier Industries, Inc. ..... H
Attachment I: GE Water & Process Technologies I
Attachment J: Huber Technology ..... J
Attachment K: Parkson Corporation ..... K
Attachment L: Phoenix Process Equipment L
Attachment M: GEA Westfalia Separator, Inc. ..... M
Attachment N: Westech Engineering, Inc. ..... N

Attachment O: World Water Works ..... O
Attachment P: Belt Filter Press Installation Summary ..... P
Attachment Q: Opinions of Probable Project Cost 1

List of Figures

Figure 1-1. Location of sludge sampling campaign 1
Figure 3-1. Photo of a gravity thickener 3
Figure 3-2. Photo of a gravity belt thickener 4
Figure 3-3. Photo of a rotary drum thickener 4
Figure 3-4. Photo of a dissolved-air flotation thickener 5
Figure 4-1. Photo of a centrifuge dewatering installation 8
Figure 4-2. Photo of a screw press dewatering installation 9
Figure 4-3. Photo of a belt press dewatering installation 10
Figure 4-4. Photo of a rotary press dewatering installation 10
Figure 5-1. Possible location of pilot trailers. 13
Figure 5-2. 18,100 Gallon Frac Trailer 14

List of Tables

Table 2-1. Design Criteria 2
Table 3-1. DAF Thickening Experiences[1] 6
Table 3-2. Thickening Technology Comparison 6
Table 3-3. Thickening Alternative Cost Evaluation 7
Table 4-4. Dewatering Technology Comparison 11
Table 4-5. Dewatering Alternative Cost Evaluation 11

1. Introduction

The existing residuals handling facilities at the Betasso WTF are inadequate to meet current and future loads. Additional thickening will be required to maximize the use of the existing lagoons and drying beds. In addition, thickening will be required as a precursor to any mechanical dewatering equipment if and when drying in the existing lagoon/beds is abandoned and mechanical dewatering is implemented.

This technical memorandum (TM) identifies various alternatives for both thickening and dewatering. General descriptions of each alternative are presented together with sizing and cost information presented by various equipment manufacturers.

Brown and Caldwell submitted sludge samples to twelve separate equipment manufacturers to perform bench-scale testing and submit proposals to meet the expected sludge production design values and the likely operating regimes. The information received from the manufacturers is included in Attachments B through O.

Figure 1-1 shows the location where sludge samples were taken during operation of the Clari-Trac sludge removal mechanisms. The sludge collection drums were filled in increments, changing from one drum to the other sequentially, to ensure essentially the same consistency in each drum. A drum mixer was used during sludge transfer to the sample buckets to ensure consistency of samples. In all, 16 sample buckets were filled and sent to the various manufacturers. Attachment A includes a list of the manufacturers who indicated interest in conducting laboratory tests and/or providing preliminary proposals.

Figure 1-1. Location of sludge sampling campaign

2. Evaluation Criteria

Table 2-1 presents the criteria used in the evaluations presented in this TM.

Table 2-1. Design Criteria

Parameter	Value
Operating Flow (mgd)	35
Annual average sludge production (lb dry solids/day)	830
Maximum day sludge production (lb/d)	3,400
Minimum day sludge production (lb/d)	240
Expected sludge concentration prior to thickening (%)	0.2
Average operating regime (hours per day)	7
Average operating regime (days per week)	5
Operating days during peak day events	7
Power cost ($/kWh)	0.066
Labor cost ($/hour)	40
Polymer cost ($/lb active)	2.80
Sludge hauling cost ($/gallon)	0.30[1,2]
Building cost ($/ft^2)	250
Concrete construction cost ($/yd^3)	750
Years	20
Inflation rate (%)	4.0
Interest rate (%)	7.0

[1]*Equivalent to $65 per wet ton at 15% dry solids cake concentration.*

[2]*Although current costs are lower than $0.30/gal, this value was quoted by one hauling company and could reflect future costs.*

Due to the preferred normal operating regime of 5 days per week, equalization would be required for all thickening and dewatering alternatives.

3. Thickening Alternatives

The design goal for thickening at the Betasso WTF is to achieve thickened sludge concentrations as high as practicable. However, when thickened sludge is discharged to the lagoon/beds, the final sludge concentration after atmospheric drying in the lagoon/beds should not exceed 6 percent as dry solids, to allow pumping of liquid sludge to the tanker trucks. In some cases the sludge could dry further and, in this case, the sludge in the lagoon/beds should exceed 15 percent to allow transport as “dry” cake. When the thickening system is followed by mechanical dewatering then the criterion is to thicken to as high a concentration as possible. Four thickening alternatives were identified for use at the WTF, including:

- Gravity Thickeners
- Gravity Belt Thickener
- Rotary Drum Thickeners
- Dissolved Air Flotation Thickeners

Each of these technologies is discussed in more detail, below.

3.1 Gravity Thickeners

Gravity thickeners are commonly used for thickening water plant sludges, although results can be highly varied with thickened dry solids concentrations of 0.3 to 10 percent. The actual concentration achieved depends largely on the raw water quality, coagulants used during treatment, and the organic fraction of the raw water. The density of flocs generally increases when raw water turbidity increases. Therefore, high turbidity waters produce sludges with higher thickened concentrations compared with lower turbidity waters.

Figure 3-1 shows a picture of a typical gravity thickener installation.

Figure 3-1. Photo of a gravity thickener

Without polymer conditioning, solids loading rates of thickeners are generally between 2.5 to 5 lb/ft^2.d. With conditioning, rates can be increased to 5 to 20 lb/ft^2.d. Gravity thickener performance is generally improved when sludge is fed continuously with essentially constant properties. This is generally achieved through equalization. Polymer addition generally accelerates the rate of thickening, but often does not significantly increase the thickened concentrations achieved. Polymer dosages tend to be case specific but generally vary from 3 to 4 lb/ton dry solids. The best point of polymer addition has often been found to be immediately upstream of the thickener using an orifice plate in the sludge piping to provide G values of from 1,000 to 10,000 s^{-1}.

A phenomenon sometimes experienced with gravity thickeners is “gelling” of the thickened sludge which resists transport along the floor to the center of the thickener. The condition can occur when thickened sludge concentrations attained in the gravity thickener are above 10 percent using high polymer doses. The sludge simply rotates with the scraper mechanism thereby preventing the sludge from being pumped to the sludge holding tank.

The key to successful operation of the gravity thickener was to rigorously prevent polymer overdosing, limit the total depth of sludge to approximately 2 feet, and limit the thickened sludge concentration to 5 percent dry solids.

3.2 Gravity Belt Thickeners

Gravity belt thickeners (GBT) have been popular because of their relatively low cost and the generally compact area of the installations. Sludge is conditioned using polymers and applied evenly to the belt of the thickener. The sludge then moves with the belt. Fixed guide vanes or plows located just above the surface of the moving belt cut through the sludge and create clear zones through which liquid drains freely through the belt fabric. Thickened solids, scraped from the belt, are collected in a hopper and pumped for further processing.

Figure 3-2 shows a picture of a typical gravity belt thickener installation.

Figure 3-2. Photo of a gravity belt thickener

Some models provide four principal thickening zones:

1. Conditioning of the sludge where polymer is added, typically in-line. Some models provide a variable orifice mixer to provide efficient rapid mixing and minimize polymer usage.
2. Flocculation of the conditioned sludge to maximize subsequent drainage on the belt.
3. Gravity drainage where rapid drainage is encouraged with the use of chicanes and wiper bars.
4. Extended thickening using a ramping device to extend the opportunity for drainage and thickening.

Pilot tests conducted at the Papago water plant in Arizona tested a GBT to thicken sludge prior to dewatering. This application was very successful and produced thickened sludge concentrations of 11 to 18 percent dry solids during low raw water turbidity (2 to 7 NTU) periods when thickening and dewatering of the sludge was typically the most difficult.

3.3 Rotary Drum Thickeners

Rotary drum thickeners (RDT) are becoming increasingly popular. They tend to be appropriate in those cases where GBTs are applicable. Performance appears to be similar to that of the GBT when thickening sludges of similar characteristics.

Figure 3-3 shows a picture of a typical rotary drum thickener installation.

Figure 3-3. Photo of a rotary drum thickener

Individual designs differ, but in general RDTs consist of a flocculation tank with mechanical mixer and a wedge-wire, perforated plate, or wire-mesh drum with internal and external spray systems. The drum drive system typically consists of a gear-motor and synchronous drive belt. All wetted parts and the support structure are typically constructed of either 304 or 316 stainless steel.

Typically polymer is injected into the incoming sludge feed line using an inline static mixer prior to entering the flocculation tank. Once inside the tank, the sludge/polymer solution is exposed to a low-shear rotary mixer for flocculation. Some designs maintain a gentle swirl within the floc tank using tangential inlet and outlet openings together with the impeller design.

The conditioned sludge then flows onto a distribution tray where it is directed onto the rotating drum. The free water passes through the openings in the drum while the captured sludge remains on the drum surface for further dewatering. Radial flights inside the drum slowly transport the thickening sludge towards the discharge end of the drum. The thickened sludge exits the unit and falls through a discharge chute into a storage tank, pump hopper or other suitable receiving device. Drum speed, mixer speed and spray water cycling are adjustable. Sludge can typically be thickened to 5-7 percent total solids and in some cases up to 15 percent total solids with up to 99 percent capture of the feed solids. Performance depends on sludge characteristics.

3.4 Dissolved-Air Flotation Thickeners

There are many dissolved-air flotation (DAF) thickening installations in the United States and around the world. Although the majority of these installations are applied to thickening wastewater sludges, DAF has also been applied to thicken water plant sludges at several locations. The City of Boulder has long-term experience with DAF clarification prior to filtration at the Boulder Reservoir (63rd Street) WTF as well as DAF applied to recover filter backwash water at the Betasso WTF.

Performance of DAF thickeners applied to water plant sludge does depend on the raw water quality from which the sludge is derived but, typically, thickened sludge concentrations of at least 2.5 to 4.5 percent dry solids are achieved using polymer. Application rates are typically significantly higher than with gravity thickeners. Loading rates of 25 to 50 lb/ft^2.d are typical with flotation thickeners applied to water sludges.

Figure 3-4 shows a picture of a typical DAF thickener installation.

Figure 3-4. Photo of a dissolved-air flotation thickener

Table 3-1 presents a summary of DAF thickening experiences at various water plants around the world.

Table 3-1. DAF Thickening Experiences[1]					
WTF	Feed Solids (%)	Thickened Float Solids (%)	Solids Loading Rate ($lb/ft^2.h$)	Sludge Type	Polymer Dosage (lb/t dry solids)
Moulle-Dunkerque	-	2.0 – 2.5	1.0 – 1.1	Ferric	4.0
Moulle-Dunkerque	0.2 – 0.35	2.5 – 3.0	0.8 – 1.0	Ferric	14
Mervent	0.03 – 0.07	3.5 – 4.0	0.33 – 0.75	Alum	3.0
Saint Vincent	-	>2.5	0.45	Alum	9.0
Cholet	0.2	3.3 – 4.0	1.5	Alum	4.0
Santillana	-	3.0 – 4.0	1.0	Alum	5.0

[1]*Information taken from AWWARF/KIWA "Slib, Schlamm, Sludge", 1990*

3.5 Comparative Evaluation of Thickening Technologies

Brown and Caldwell submitted sludge samples to twelve separate equipment manufacturers to perform bench-scale testing and submit a design proposal to meet the expected sludge production values presented in Table 2-1, together with the likely operating regime of mechanical sludge thickening and dewatering facilities of 7 hours per day and 5 days per week. For a maximum daily load condition, operation was assumed to extend for 7 days if required. A comparison of the evaluated thickening technologies is presented in Table 3-2. Comparison parameters include qualitative and quantitative criteria.

Table 3-2. Thickening Technology Comparison				
Parameter	Gravity Thickener	Gravity Belt Thickener	Rotary Drum Thickener	Dissolved-Air Flotation Thickener
Strengths	• Low operational needs • Low power needs	• Highest thickened sludge concentration • Easy to operate	• Enclosed operation • Small footprint • Similar performance to GBT • Easy to operate	• Provides good buffer to varying solids loads
Weaknesses	• Largest footprint • Potential gelling of sludge at high polymer dosages • Both hydraulic and solids loading limited	• Needs regular operator attention	• Limited experience with water plant sludges	• High power needs
Solids Capture	90%	95%	95%	95%
Thickened sludge concentration	2.5%	5%	5%	4%
Polymer Use, lb active/DT	3	8	8	4
Equipment footprint, sf	1,200	130	100	450
Safety	High	High	High	High
Reliability	High	High	High	High
O&M Person-Hours per 7-hour day	2	4	4	3

Estimates for average person-hours required for operation and maintenance of each technology are included in Table 3-2. Automation of polymer addition, based on sludge flow and TSS probe readings are assumed for the O&M estimates.

Table 3-3 presents a synthesis of costs for each of the alternatives derived from manufacturers' proposals and calculated based on proposed loading rates and utility requirements. Capital costs are based on the sum of equipment costs and estimated building costs. Annual O&M costs were developed for each equipment alternative based on polymer use, power use, person-hours, and hauling fees. A 20-year O&M lifecycle cost was calculated based on the sum of the annual costs for each alternative.

It should be noted that not all manufacturers conducted laboratory tests on the samples received, and not all the results received were conclusive. However, the results do provide a reasonable indication of the relative merits of each process alternative. The final word on the most appropriate processes for the Betasso WTF will come from the results of on-site pilot trials.

Table 3-3. Thickening Alternative Cost Evaluation

Parameter	Gravity Thickener	Gravity Belt Thickener	Rotary Drum Thickener	Dissolved-Air Flotation Thickener
Total Project Cost[1]	$3,100,000	$2,400,000	$2,400,000	$3,300,000
Annual O&M Cost	$21,000	$42,000	$42,000	$31,300
Annual Power Cost	$180	$540	$500	$1,900
Annual Polymer Cost	$1,300	$3,400	$3,400	$1,700
Annual Hauling Fees	$287,000	$68,000	$68,000	$182,000
Total O&M Lifecycle Cost	$4,600,000	$1,700,000	$1,700,000	$3,200,000
Total Lifecycle Cost	$7,700,000	$4,100,000	$4,100,000	$6,500,000

[1]Detailed project costs are included in Attachment Q

4. Dewatering Alternatives

The design goal for dewatering at the Betasso WTF is to achieve dewatered cake concentrations as high as possible. However, in order for the cake to be transported as a "dry" cake, the concentration achieved should be at least 15 percent as dry solids. Four dewatering alternatives were evaluated for use, including:

- Centrifuge
- Screw Press
- Belt Filter Press
- Rotary Press

Each of these technologies is discussed in more detail, below.

4.1 Centrifuge

Centrifuges have become popular dewatering devices for both wastewater and water plant sludges. Advantages of centrifugation are the small space requirements and complete process automation.

Figure 4-1 shows a picture of a typical centrifuge dewatering installation.

The scroll centrifuge is a rotating cylindrical bowl with a conical end to allow solids discharge. The opposite end of the bowl has effluent ports of varying distance from the bowl wall, thus allowing different "pond depths" for liquid discharge. Inside the bowl is a screw conveyor that rotates at a slightly different speed relative to the bowl. This screw conveyor moves the thickened solids to the conical end of the bowl for discharge from the centrifuge.

For alum sludges conditioned with polymer and feed solids concentrations of approximately 3 percent, the scroll centrifuge may be expected to produce a cake discharge of 24 to 28 percent with approximately 3.0

lb/ton polymer addition. With filter backwash waters (at 1 to 2 percent solids) cake discharges of 18 percent have been reported. As with other dewatering devices, sludges derived from the treatment of high turbidity waters produce the highest cake concentrations. Sludges produced from waters with low turbidities may produce cake concentrations below 15 to 20 percent dry solids. A disadvantage sometimes reported with the scroll centrifuge is the high centrate solids concentration.

Variables influencing solids recovery and cake concentration with the scroll centrifuge are the centrifugal acceleration produced by the bowl's rotational speed, the shape of the bowl, the pond depth, the pitch of the screw conveyor and the differential speed between screw conveyor and bowl.

Figure 4-1. Photo of a centrifuge dewatering installation

4.2 Screw Press

Two principal manufacturers have offered screw press equipment for municipal sludge dewatering applications: FKC and Huber. Their equipment operates on similar principles, but has differences in the sludge feed, screen construction, and maintenance requirements. In order to maximize the throughput and efficiency of the screw press, the screen surrounding the screw must be cleaned periodically to remove any material that may have lodged, although this is not expected to be a major issue with the Betasso WTF sludge given its consistency and lack of rags. The Huber screw press uses a steel brush attached to the edge of the screw to continuously clean the wedgewire screen and it has an automated, periodic washing cycle to blast the screen with high-pressure water. The FKC screw press relies on manual cleaning of the perforated steel screen with high-pressure water, steam, or other means, if required. The Huber screw press receives flocculated sludge delivered directly from the pressurized feed pipe, whereas the FKC design uses a small flocculation tank and gravity-feeds sludge to the press.

Figure 4-2 shows a picture of a typical screw press dewatering installation.

The screw press is generally considered to be a relatively simple, slow moving mechanical device. Dewatering is continuous and is accomplished by gravity drainage at the inlet end of the screw and then by reducing the volume as the material being dewatered is conveyed from the inlet to the discharge end of the screw press. Proper screw design is critical, as different materials require different screw speeds, screw configurations, and screens in order to dewater to a high outlet consistency while maintaining an acceptable capture rate. The Huber press provides a conical screw shaft and cylindrical sieves consisting of three treatment zones: inlet and drive zone, three-part thickening and dewatering zone, and press zone with pneumatic counter-pressure cone. In the first part of the thickening and dewatering zone the supernatant is

removed by the feed pump via a large free filter surface at a low primary pressure. A pressure probe in the feed area controls the primary pressure and helps to maintain a high filtrate quality.

In the second part of the screen the volume of material between the screw flights is reduced by the conical screw and the sludge pressed against the inner screen surface so that the sludge is dewatered with a continuous reduction of the filter cake thickness. The screen apertures are much smaller in this screen section.

In the third part of the screen the residual water is pressed out of the sludge, at a minimum filter cake thickness, by the pneumatic counterpressure cone at the press discharge. The dewatered sludge is pushed by the conveying screw past the pressure cone into the discharge chamber. The sludge residence time in the screw press and thus the filtration time can be adjusted to individual requirements by adjusting the rotational speed of the screw shaft.

Figure 4-2. Photo of a screw press dewatering installation

4.3 Belt Filter Press

Many belt filter press variations have been developed by machinery suppliers. In essence, they all consist of a horizontal perforated or woven belt on which the conditioned sludge is fed, and a press belt which bears on the other. The belts are kept in contact by a series of individually adjustable rollers. Dewatering is carried out in three separate stages: An initial draining zone followed by a press zone and finally a shear zone. In the press zone, the sludge is subjected to mechanical pressure between press belt and filter belt. The belt speed is variable as is the compression of the rollers enabling the belt press to be adjusted to suit the dewatering characteristics of the particular sludge.

Figure 4-3 shows a picture of a typical belt press dewatering installation.

Using alum sludges (of approximately 2.5 percent feed concentration) preconditioned with 10 to 15 lb/ton polymer, filter cake concentrations of only 8 to 12 percent were reported in the past. However, newer technologies have considerably improved performance.

There are many belt press examples for dewatering water plant sludges.

Figure 4-3. Photo of a belt press dewatering installation

4.4 Rotary Press

The principle of operation of the rotary press is essentially to feed polymer flocculated sludge into a rectangular channel formed between two parallel revolving stainless steel chrome plated screens. The filtrate passes through the screens as the flocculated sludge advances within the channel. The sludge continues to dewater as it travels around the channel, eventually forming a cake near the outlet side of the press. The frictional force of the slow moving screens, coupled with the controlled outlet restriction, results in the extrusion of dewatered cake. The sludge is fed at low pressure into the space between the two parallel filtering elements. As the free water comes away from the sludge, solids accumulate in the channel until enough pressure is generated against the outlet gate. The slow rotational speed of the filtering element generates enough back pressure to dewater the remaining solids.

Figure 4-4 shows a picture of a typical rotary press dewatering installation.

A feature of the rotary press is the ability to add units as the need arises in the future. For example a two-channel machine could ultimately be expanded to a maximum of six channels per machine.

Figure 4-4. Photo of a rotary press dewatering installation

4.5 Comparative Evaluation of Dewatering Technologies

Brown and Caldwell submitted sludge samples to nine separate dewatering equipment manufacturers to perform bench-scale testing and submit a design proposal to meet the expected sludge production values presented in Table 2-1. A comparison of the evaluated dewatering technologies is presented in Table 4-4.

Table 4-4. Dewatering Technology Comparison

Parameter	Centrifuge	Screw Press	Belt Filter Press	Rotary Press
Strengths	• Low operational needs • Small footprint	• Low operational needs • Small footprint	• High solids capture rate • Low operational needs	• Low operational needs • Low energy costs • Smallest footprint
Weaknesses	• High power consumption • Scroll can require high maintenance • Noisy • High polymer needs	• Large footprint • High labor requirement	• Large footprint • High labor require-ment	• Lowest cake concentration • Few installations
Solids Capture	90%	92%	95%	92%
Thickened sludge concentration	17%	15%	16%	9%
Polymer Use, lb active/DT	35	20	15	20
Footprint, ft^2	50	180	150	-
Safety	High	High	High	High
Reliability	High	High	High	High
O&M Person-Hours per 7-hour day	3	4	4	4

Estimates for average person-hours required for operation and maintenance of each technology are included in Table 4-3. Automation of polymer addition, based on sludge flow and TSS probe readings are assumed for the O&M estimates.

Table 4-5 presents a synthesis of costs for each of the alternatives derived from manufacturers proposals and calculated based on proposed loading rates and utility requirements. Capital costs are based on the sum of equipment costs and estimated building costs. Annual O&M costs were developed for each equipment alternative based on polymer use, power use, person-hours, and hauling fees. A 20-year lifecycle cost was calculated based on the sum of the annual costs for each alternative.

Table 4-5. Dewatering Alternative Cost Evaluation

Parameter	Centrifuge	Screw Press	Belt Filter Press	Rotary Press[1]
Total Project Cost[2]	$2,000,000	$2,200,000	$2,000,000	$ -
Annual Maintenance Cost	$31,300	$41,700	$41,700	$ -
Annual Polymer Cost	$14,800	$8,500	$6,400	$ -
Annual Power Cost	$3,600	$1,100	$1,400	$ -
Annual Hauling Fees	$64,100	$72,700	$68,100	$ -
Total O&M Lifecycle Cost	$1,700,000	$1,800,000	$1,750,000	$ -
Total Lifecycle Cost[3]	$3,700,000	$4,000,000	$3,750,000	$ -

[1]*A laboratory test report was provided by Fournier Industries, although they concluded that their equipment was not appropriate for this application.*

[2]*Detailed project costs are included in Attachment Q.*

[3]*Only major cost items are included for this process comparison*

It should be noted that not all manufacturers conducted laboratory tests on the samples received, and not all the results received were conclusive. However, the results do provide a reasonable indication of the relative merits of each process alternative. The final word on the most appropriate processes for the Betasso WTF will come from the results of on-site pilot trials.

5. Recommendations

5.1 Thickening Recommendations

Of the thickening alternatives evaluated, the gravity thickener is the least attractive alternative since it presents the highest lifecycle costs and the highest capital costs, principally due to the concrete requirements. It also has the highest hauling fees and the highest number of sludge hauling truck traffic.

The gravity belt thickener and the rotary drum thickener stand out as being lowest lifecycle cost. These alternatives also present the lowest total capital costs. These processes also have the potential of producing the highest thickened sludge concentration, compared with other alternatives.

The dissolved-air flotation thickener has an intermediate total lifecycle cost. The thickened sludge concentration would likely be less than the GBT or RDT alternatives, although likely to be still adequate. A perceived advantage of the DAF alternative is that this process is already in use at the WTF for backwash recovery.

Therefore, the recommendation is that manufacturers of both GBTs and RDTs should be invited to perform on-site pilot trials to confirm the performances and the solids and hydraulic loading rates predicted by the manufacturers' laboratory tests, and summarized in this TM.

A manufacturer of DAF technology should also be invited to test a pilot DAF unit to also confirm the performance and sizing parameters.

5.2 Dewatering Recommendations

Of the dewatering alternatives, the three processes evaluated in detail were the centrifuge, screw press and belt filter press. The rotary press manufacturer Fournier Industries was the only rotary press manufacturer who performed laboratory tests on the samples sent to them, and presented a report of the findings. This manufacturer recommended against the rotary press for this application due to the inadequate performance predicted with this sludge.

The three remaining alternatives presented very similar total lifecycle costs, and similar total operating costs and capital costs.

The centrifuge has the advantages of a more compact installation and slightly higher final cake concentration. However, polymer use will likely be higher than the other alternatives.

The screw press and belt press are predicted to have somewhat similar performances, although it appears that the belt press would produce a slightly higher cake concentration but with a lower polymer dosage.

Therefore, the recommendation is that manufacturers of centrifuges, screw press and belt filter press should be invited to perform on-site pilot trials to confirm the performances and the solids and hydraulic loading rates predicted by the manufacturers' laboratory tests, and summarized in this TM.

5.3 Piloting Recommendations

Decisions on the schedule for conducting on-site pilot trials should be made as soon as possible. Due to the number of recommended processes to be piloted, it will be important to schedule each manufacturer to avoid conflicts, as early as possible.

It is recommended that only thickening devices be programmed for piloting at this stage. Dewatering equipment could be piloted at a later stage as required, after implementation of mechanical thickening at the WTF.

Each manufacturer will have different sludge feed requirements, depending on the size of the pilot unit and the solids loading performance of the device. However, it is likely that a maximum of 100 gpm of sludge feed will be required. Typically only one sedimentation basin is blown down each day which yields approximately 9,000 gallons. Contributions from the backwash equalization tanks and DAF bring the total daily sludge production to approximately 11000 gallons in the spring. Equalization of sludge will be provided using an frac trailer similar to the one pictured in figure 5-2. Depending on the trailer provided a mixing pump may be required to ensure that sludge remains homogenous. Further details about sludge equalization will be developed when specific information about sludge flow requirements for the various pilot installations is obtained.

The location for the manufacturers to locate their trailer-mounted units is as close to the drying lagoon/beds as practicable. The actual location depends on providing power and water sources to the pilot trailers. Typically, the pilot equipment requires a 3-phase 480V power supply at approximately 60 amps. A supply of fresh water is also required for chemical make-up and for washwater. Figure 5-1 shows that due to the proximity of access roads, a location alongside one of the North drying beds appears to be the most appropriate location.

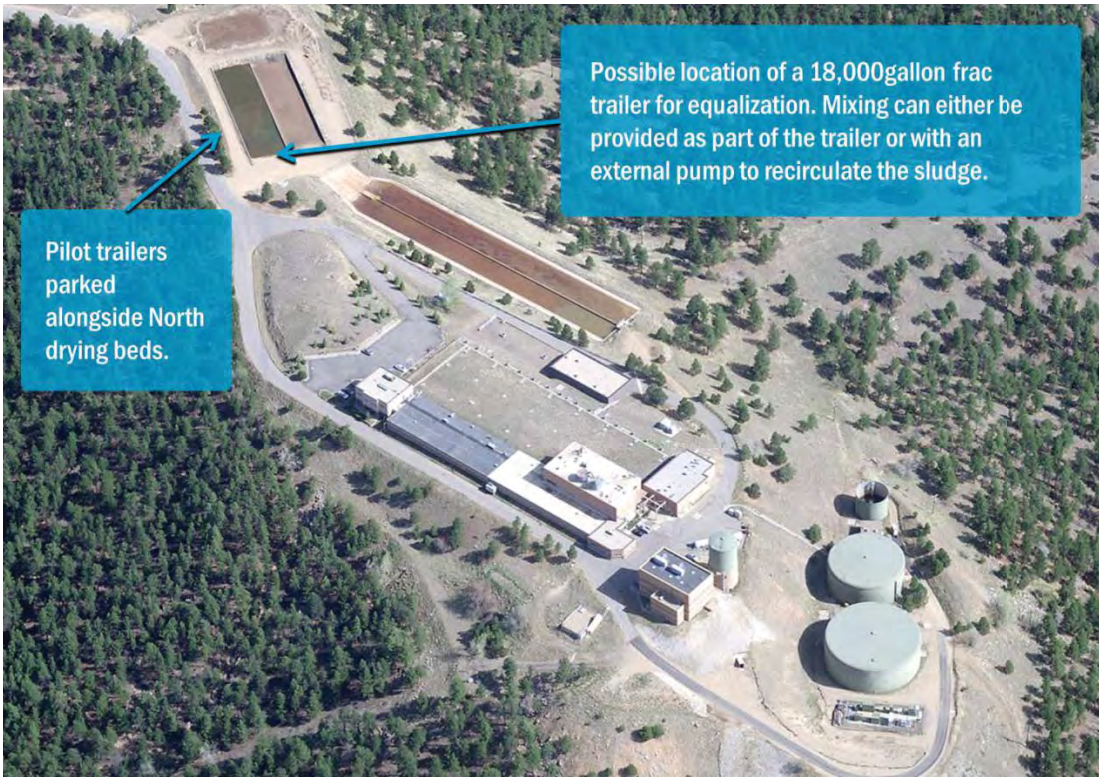

Figure 5-1. Possible location of pilot trailers.

Figure 5-2. 18,000 Gallon Frac Trailer

Attachment A: Manufacturer List

Company	Technology	Rep	Sample sent on:	Comments	Number of 5-gallon buckets	Lab report received?	Proposal Received?
Parkson	Rotary Drum Thickener	MISCO (Susan Pilgram)	10/14/2013 (FedEx)	5 gallons - Sample Number (9)	1	Yes	Yes
Westfalia	Centrifuge	MISCO (Susan Pilgram)	10/14/2013 (FedEx)	5 gallons - Sample Number (11)	1	Yes	Yes
Prime Solutions, Inc.	Rotary Press	Letts Van Kirk	10/14/2013 (FedEx)	Form E-mailed on 10/6/13 to jpdendel@psirotary.com - 5 gallons - Sample Number (10)	1	**No**	**No**
Westech	DAFT, Gravity thickener	Goble Sampson (Josh Queen)	10/14/2013 (FedEx)	5 gallons - Sample Numbers (3 and 4)	2	Yes	Yes
Phoenix Process	GBT, Belt Press	MISCO (Susan Pilgram)	10/14/2013 (FedEx)	10 gallons - Sample Numbers (5 and 6)	2	Yes	Yes
Andritz	Centrifuge; BFP; GBT; Screw Press	Water Control Corp.	10/14/2013 (FedEx)	10 gallons - Sample Numbers (7 and 8)	2	Yes	Yes
Flottweg	Centrifuge (Thickening, Dewatering)	isiWEST	10/14/2013 (FedEx)	5 gallons - Sample Number (12)	1	Yes	**No**
BDP Industries	GBT, Belt Press	Goble Sampson	10/14/2013 (FedEx)	Sample Numbers (1 and 2) 10-gallons required (5-gal to Dan and 5-gal to Steve)	2	Yes	Yes
FKC Co. Ltd.	Screw Press	Water Group	10/14/2013 (FedEx)	5 gallons - Sample Number (13)	1	Yes	Yes
Fournier Industries, Inc.	Rotary Press	Water Control Corp.	10/14/2013 (UPS)	5 gallons - Sample Number (15)	1	Yes	**No**
Huber Technology	Screw Press	Goble Sampson	10/14/2013 (FedEx)	5 gallons - Sample Number (16)	1	Yes	Yes
CUT	Tubular membranes	-	10/14/2013 (UPS)	5 gallons - Sample Number (14)	1	Yes	Yes
World Water Works	DAF	Water Group	-	-	-	**No**	Yes
GE Water	Hollow fiber membranes	GE	-	-	-	**No**	Yes
Charter Machine	DAF	isiWEST	-	-	-	**No**	Yes

Attachment B: Andritz Separation Inc.

Andritz Sludge Dewatering

Budget Proposal 1.0M Gravity Belt Thickener

Betasso WTP, Boulder, CO

Budget Proposal No1370490
Date: 11/17/2013

By : Bruce SoRelle
Tel : (817) 419-1730
Email:
bruce.sorelle@andritz.com

John Bratby PHD., PE
Vice President-
Senior Process Engineer
Brown and Caldwell
1697 Cole Blvd. Ste 200
Golden ,CO 80407
PH: 303-239-5452
Cell: 720-320-3744
Email: jbratby@brwncald.com

ANDRITZ SEPARATION INC.
1010 Commercial Blvd S.
Arlington, Texas 76001, USA
Phone: +1 800 433 5161
Fax: +1 817 468 3961
separation.us@andritz.com
www.andritz

Confidential document. All rights reserved. No duplication or disclosure to third parties permitted without the written consent of ANDRITZ SEPARATION INC.

TABLE OF CONTENTS

Cover Letter 3

1.0 1.0M GBT BUDGET PROPOSAL

1.1 ANTICIPATED OPERATOR CONDITIONS

1.2 ANTICIPATED SIZING AND PERFORMANCE

2.0 BUDGETARY OFFER

2.1 SCOPE OF SUPPLY

3.0 PRICING SUMMARY

4.0 EXCLUDED FROM ANDRITZ SCOPE OF SUPPLY

5.0 COMMERCIAL SUMMARY

5.1 GENERAL COMMERCIAL TERMS

6.0 TERMS AND CONDITIONSOF SALE

1228588-1

November 17, 2013

Brown and Caldwell
1697 Cole Blvd. Ste. 200
Golden, CO 80407

Subject: Betasso

Dear Mr. Bratby

Please find enclosed our pricing, technical specifications and drawings of the ***Andritz*** 1.0 belt thickener (GBT) that will further describe our dewatering system and its features.

The ***Andritz*** GBT is the most time proven technology for this type application, as well as the most cost effective. The unit offers low connected horsepower and low cost of ownership in terms of polymer consumption. However, as you review the specifications and compare our equipment to other more price competitive suppliers, please keep in mind the following:

- Frame size and moment of inertia
- B-10 bearing life
- Pneumatic belt tension and tracking; Pulp and paper quality (continuous, not proportional)
- Pneumatic control

The above are just a few of the many features that have made the ***Andritz*** GBT the thickening technology of choice in today's market, and another important feature is the robust design of the unit.

Once again, we thank you for your time and interest in Andritz dewatering technology and look forward to working with you on the Betasso project.

Sincerely,
Andritz Separation, Inc.

Bruce SoRelle
Western Regional Manager

1.0M GBT BUDGETARY PROPOSAL

1.0 OPERATING CONDITIONS & SIZING & PERFORMANCE

1.1 ANTICIPATED OPERATOR CONDITIONS

Application	Water Treatment Sedimentation Tank
Operating Cycle(,hrs/day)	7 hours/5 days
Type of sludge (Municipal)	Alum /PAC
Blend	TBD
Feed solids concentration (%TS)	0.79
Hydraulic Loading (GPM)	90-170
Solids Loading Design (lbs/hr TS)	680
Volatile Solids % VS	44
Range of pH	6.1
Capillary Suction Time (seconds)	78
Feed solids SVI (ml/g)	120

1.2 ANTICIPATED SIZING & PERFORMANCE

Decanter type	**1.0**
Number of machines	1
Unit flow (GPM)	20-200
Polymer consumption (active lbs/ton TS)	11-12+/-2
Dryness (%TS)	1-3%
Capture rate (%TSS)	95

C. ***1.Note: If the sludge exists, laboratory and pilot testing are highly recommended to confirm process capabilities. This does not represent a guarantee!***

D. ***2. Note; It is impossible to confirm polymer consumption without actually having a sludge sample. There are many factors that can affect polymer consumption such as pH ,salt content, particle size***

2.0 BUDGETARY OFFER
2.1 SCOPE OF SUPPLY

ITEM #	# REQ'D	DESCRIPTION
1.	1 each	**Andritz 1.0 meter Gravity Belt Thickener** including: • Carbon Steel HDG Frame • Polyethylene Wear Strips • Plow Chicanes 7 Rows • 304 SS Wetted Filtrate Pans • 304 SS Distribution Headbox • Pneumatic Tensioning and tracking • 304 SS Discharge Hopper to pump flange
2.	1 each	***Control/Pneumatic Panel for Gravity Belt Thickener*** • NEMA 4X, 304 stainless steel enclosure, UL508A/CSA listed • Allen Bradley PanelView Plus OIT touch screen • Allen Bradley CompactLogix PLC Processor w/Ethernet • Allen Bradley Power Flex Series 755 (6 Pulse) Variable Frequency Drive • DC Buss fuses for VFD's • Main power disconnect switch • Control voltage transformer • Automatic torque control operation
3.	1 lot	**Basic Engineering and Documentation** includes: • Arrangement drawings with dimensions for the Andritz scope • Foundation drawings showing details needed for building work • Flow sheet for sludge, polymer, and utilities showing equipment, pipes, and control loops as well as technological quantities • Motor list • Written sequence of operation including all interlocks • Electrical and pneumatic schematics • Terminal wiring details

ITEM #	# REQ'D	DESCRIPTION
		• Erection, operating and maintenance manuals • Part manuals
4.	1 ea	**Air Compressor**
5.	1 ea	**Washwater Booster Pump**

3.0 PRICING SUMMARY

EQUIPMENT	Price Each	Price Total
ANDRITZ 1.0M Gravity Belt Thickener	$155,000	$155,000

4.0 EXCLUDED FROM ANDRITZ SCOPE OF SUPPLY

The ANDRITZ scope of supply does not include the following items as may be necessary for equipment installation & operation to the performance levels specified:

- Civil and structural engineering work.
- Building and building plans (ANDRITZ will furnish load data and layout drawings but is not responsible for updating of building or building plans)
- Building modifications
- Platforms and access stairs or ladders
- All utilities required for operation and erection
- Unloading at site (by others)
- Cranes or other lifting devices to install equipment
- Other instruments not specified in our scope of supply / outside of panel
- Polymer feed system
- Flow Meters
- Sludge Grinder
- Wash water booster pump
- Cake Discharge Pumps
- Centrate Discharge Pump
- Polymer
- Lubricants

5.0 COMMERCIAL SUMMARY

5.1 GENERAL COMMERCIAL TERMS

Terms and Conditions

This proposal is based on the attached ANDRITZ Separation "Standard Terms and Conditions of Sale".

Special Provisions

- All prices quoted in US Dollars,
- Pricing quoted is FOB Jobsite, and does not include unloading.
- Pricing does not include any local, state or federal taxes, permits, duties or other fees. Any taxes or fees that may apply must be added to the quoted price and paid by the buyer. Bonding is not included.

Validity

Budget quotation is valid for a period of ninety (90) days.

Terms of Payment

ANDRITZ Separation agrees to the following payment terms (on a net 30 day basis):

- 30% of Order Value upon submittal of Approval Drawings
- 60% of Order Value upon Shipment
- 10% of Order Value upon Startup, not to exceed 120 days from Shipment

Delivery

Approval Drawings will be submitted 6 - 8 weeks after written acceptance of Order.
Equipment delivery will be 20 - 24 weeks from receipt of written Approved Submittals.

Field Service

This Installation checkout, startup and training services by a qualified ANDRITZ Service Technician have been included in this proposal for one trip with up to 5 days on site.

ANDRITZ will provide additional erection and start-up supervision for $1,500.00 per day plus expenses, eight (8) hours/day. At the request of the Purchaser, overtime service will be provided at a rate of 1.5 times quoted rates for weekdays and 2.0 times quoted rates for weekends. Expenses are defined as the cost of travel from Seller's plant to the point of installation and return, together will all living expenses during the period of service.

The above charges shall be made for time involved including delays which are beyond the Seller's control.

6.0 STANDARD TERMS AND CONDITIONS OF SALE

1. TERMS APPLICABLE

The Terms and Conditions of Sale listed below are the exclusive terms and conditions applicable to quotations made and orders acknowledged by the ANDRITZ entity supplying the same ("Seller") for the sales of products, equipment and parts relating thereto ("Products"). If this quotation or acknowledgment contains terms additional to or different from those offered by Buyer, then any acceptance by Seller is expressly made conditional upon Buyer's assent to such additional or different terms. Any of Buyer's terms and conditions that are in addition to or different from those contained herein, which are not separately agreed to by Seller in writing, are hereby objected to and shall be of no effect. [The term "this Agreement" as used herein means this quotation or acknowledgment or purchase order, together with any attachment hereto, any documents expressly incorporated by reference and these Terms and Conditions of Sale.

2. DELIVERY

Delivery dates are good faith estimates and do not mean that "time is of the essence." Buyer's failure to promptly make advance or interim payments, supply technical information, drawings and approvals will result in a commensurate delay in delivery. Upon and after delivery, risk of loss or damage to the Products shall be Buyer's. Delivery of the Products hereunder will be made on the terms agreed to by the parties as set forth in this Agreement, according to INCOTERMS 2010.

3. WARRANTY

(a) Seller warrants to Buyer that the Products manufactured by it will be delivered free from defects in material and workmanship. This warranty shall commence upon delivery of the Products and shall expire on the earlier to occur of 12 months from initial operation of the Products and 18 months from delivery thereof (the "Warranty Period"). If during the Warranty Period Buyer discovers a defect in material or workmanship of a Product and gives Seller written notice thereof within 10 days of such discovery, Seller will, at its option, either deliver to Buyer, on the same terms as the original delivery was made, according to INCOTERMS 2010, a replacement part or repair the defect in place. Any repair or replacement part furnish pursuant to this warranty are warranted against defects in material and workmanship for one period of 12 months from completion of such repair or replacement, with no further extension. Seller will have no warranty obligations for the Products under this paragraph 3(a): (i) if the Products have not been operated and maintained in accordance with generally approved industry practice and with Seller's specific written instructions; (ii) if the Products are used in connection with any mixture or substance or operating condition other than that for which they were designed; (iii) if Buyer fails to give Seller such written 10 day notice; (iv) if the Products are repaired by someone other than Seller or have been intentionally or accidentally damaged; (v) for corrosion, erosion, ordinary wear and tear or in respect of any parts which by their nature are exposed to severe wear and tear or are considered expendable; or (vi) for expenses incurred for work in connection with the removal of the defective articles and reinstallation following repair or replacement.

(b) Seller further warrants to Buyer that at delivery, the Products manufactured by it will be free of any liens or encumbrances. If there are any such liens or encumbrances, Seller will cause them to be discharged promptly after notification from Buyer of their existence.

(c) THE EXPRESS WARRANTIES SELLER MAKES IN THIS PARAGRAPH 3 ARE THE ONLY WARRANTIES IT WILL MAKE. THERE ARE NO OTHER WARRANTIES, WHETHER STATUTORY, ORAL, EXPRESS OR IMPLIED. IN PARTICULAR, THERE ARE NO IMPLIED WARRANTIES OF MERCHANTABILITY OR FITNESS FOR A PARTICULAR PURPOSE.

(d) The remedies provided in paragraphs 3(a) and 3(b) are Buyer's exclusive remedy for breach of warranty.

(e) With respect to any Product or part thereof not manufactured by Seller, Seller shall pass on to Buyer only those warranties made to Seller by the manufacturer of such Product or part which are capable of being so passed on.

4. LIMITATION OF LIABILITY

Notwithstanding any other provision in this Agreement, the following limitations of liability shall apply:

(a) In no event, whether based on contract, tort (including negligence), strict liability or otherwise, shall Seller, its officers, directors, employees, subcontractors, suppliers or affiliated companies be liable to Buyer or any third party for loss of profits, revenue or business opportunity, loss by reason of shutdown of facilities or inability to operate any facility at full capacity, or cost of obtaining other means for performing the functions performed by the Products, loss of future contracts, claims of customers, cost of money or loss of use of capital, in each case whether or not foreseeable, or for any indirect, special, incidental or consequential damages of any nature.

(b) The aggregate liability of Seller, its officers, directors, employees, subcontractors, suppliers or affiliated companies, for all claims of any kind for any loss, damage, or expense resulting from, arising out of or connected with the Products or this Agreement or from the performance or breach thereof, together with the cost of performing make good obligations to pass performance tests, if applicable, shall in no event exceed the contract price. The foregoing notwithstanding, Seller's aggregate liability for any claims for (a) delay in delivery shall not exceed 5% and (b) failure to achieve performance requirements, shall not exceed 15% of the contract price.

(c) The limitations and exclusions of liability set forth in this paragraph 4 shall take precedence over any other provision of this Agreement and shall apply whether the claim of liability is based on contract, warranty, tort (including negligence), strict liability, indemnity, or otherwise. The remedies provided in this Agreement are Buyer's exclusive remedies.

(d) All liability of Seller, its officers, directors, employees, subcontractors, suppliers or affiliated companies, resulting from, arising out of or connected with the Products or this Agreement or from the performance or breach thereof shall terminate on the third anniversary of the date of this Agreement.

5. CHANGES, DELETIONS AND EXTRA WORK

Seller will not make changes in the Products unless Buyer and Seller have executed a written Change Order for such change. Any such Change Order will include an appropriate adjustment to the contract price and delivery terms. If the change impairs Seller's ability to satisfy any of its obligations to Buyer, the Change Order will include appropriate modifications to this Agreement. If, after the date of this quotation or acknowledgment, new or revised governmental requirements should require a change in the Products, the change will be subject to this paragraph 5.

6. TAXES

Seller's prices do not include any sales, use, excise or other taxes. In addition to the price specified herein, the amount of any present or future sales, use, excise or other tax applicable to the sale or use of the Products shall be billed to and paid by Buyer unless Buyer provides to Seller a tax-exemption certificate acceptable to the relevant taxing authorities.

7. SECURITY INTEREST

Seller shall retain a purchase money security interest and Buyer hereby grants Seller a lien upon and security interest in the Products until all payments hereunder have been made in full. Buyer acknowledges that Seller may file a financing statement or comparable document as required by applicable law and may take all other action it deems reasonably necessary to perfect and maintain such security interest in Seller and to protect Seller's interest in the Products.

8. SET OFF

Neither Buyer nor any of its affiliates shall have any right to set off claims against Seller or any of its affiliates for amounts owed under this Agreement or otherwise.

9. PATENTS

Unless the Products or any part thereof are designed to Buyer's specifications and provided the Product or any part thereof is not used in any manner other than as specified or approved by Seller in writing, (i) Seller shall defend against any suit or proceeding brought against Buyer to the extent based on a claim that any Product, or any part thereof, infringes any United States device patent; provided Seller is notified
promptly in writing and given the necessary authority, information and assistance for the defense of such suit or proceeding; (ii) Seller shall satisfy any judgment for damages entered against Buyer in such suit; and (iii) if such judgment enjoins Buyer from using any product or a part thereof, then Seller shall, at its option: (a) obtain for Buyer the right to continue using such Product or part; (b) eliminate the infringement by replacing or modifying all or part of the Products; or (c) take back such Product or part and refund to Buyer all payments on the purchase price which Seller has received, in which case neither Buyer nor Seller will have any claim against the other under this Agreement or arising out of the subject matter of this Agreement. The foregoing states Seller's entire liability for patent infringement by any Product or part thereof.

10. SOFTWARE LICENSE, WARRANTY, FEES

The following Software Terms and Conditions apply to any software furnished by Seller, whether separately packaged or embedded in the Products furnished by Seller hereunder:

(a) Seller hereby grants to Buyer: a non-exclusive, non-transferable license to use any computer software delivered to Buyer under this Agreement in machine-readable, object code form and any modifications made by Seller thereto ("Software"), but only in connection with the configuration of the Products and operating system for which the Software is ordered and for the end-use purpose stated in the related Seller operating documentation. Buyer agrees that neither it nor any third party shall modify, reverse engineer, decompile or reproduce the Software, without Seller's prior written consent, except for making a single copy for backup or archival purposes in accordance with the related Seller operating documentation, and provided that Seller's confidential and proprietary legend is included. Except to the extent that the parties otherwise agree in writing, Buyer's license to use the copy of such Software shall terminate upon breach of this license or Agreement by Buyer, including, without limitation, breach of payment or confidentiality obligations. All copies of the Software are the property of Seller, and all copies for which the license is terminated shall be returned to Seller promptly after termination.

(b) Buyer may not transfer this software license and warranty to a third party without Seller's previous written consent, signed by a Seller authorized representative.

(c) Seller warrants that on the date of shipment of the Software only to Buyer or Buyer's Seller-authorized transferee hereunder that: (1) the Software media contain a true and correct copy of the Software and are free from material defects; (2) Seller has the right to grant the license hereunder; and (3) the Software will function substantially in accordance with the related Seller operating documentation. Seller disclaims any warranty that the operation of the Software will be uninterrupted or error free. This warranty does not apply to software delivered by Seller but produced by others. The warranty for software produced by others shall be the warranty as stated by the software producer.

(d) If within six months (6) months from date of initial installation (but not more than one year from date of shipment by Seller to Buyer) of Software, Buyer discovers that the Software is not as warranted above and promptly notifies Seller in writing, within this period of time, of the nonconformity, and if Seller cannot correct the nonconformity or deems correction to be commercially impracticable or prohibitively expensive, Buyer's and Buyer's Seller-authorized transferee's exclusive remedies, at Seller's option and expense, are: (1) replacement of the nonconforming Software; or (2) termination of this license and a refund of an equitable, pro rata share of the contract price or license fee paid.

(e) If any infringement and trade secret claims are made against Buyer based on the Buyer's use of the Software in a manner specified or approved by Seller, Seller shall: (i) defend against any suit or proceeding brought by an unaffiliated third party against Buyer to the extent the suit or proceeding is based on a claim that the Software or that the specified or approved use of the Software infringes a United States patent, a copyright or violates a trade secret agreement in which Seller was a party and provided that Seller is notified promptly in writing and given the necessary authority, information and assistance for the defense and settlement of such suit or proceeding (including the sole authority to select counsel and remove the Software or stop accused infringing usage); (ii) Seller shall satisfy any settlement or final judgment (after any appeals) for damages entered against Buyer in such suit; and (iii) if such settlement prohibits or judgment enjoins Buyer from using the Software, Seller shall at its option: (a) obtain for Buyer the right to continue using such Software; (b) eliminate the infringement by replacing or modifying the Software, or (c) take back such Software and refund to Buyer all payments on the purchase price which Seller has received, in which case neither Buyer nor Seller will have any claim against the other under this Agreement or arising out of the subject matter of this Agreement. However, Seller's obligations with respect to infringement and trade secret claims will not apply to the extent that the claim or adverse final judgment is based on: (1) Buyer's running of the Software after being notified to discontinue running due to such a claim; (2) the combination of the Software with a non-Seller software, product, data or process; (3) damages attributable to the value of the use of a non-Seller software, product, data, or process; (4) Buyer's alteration of the Software; (5) Buyer's distributed the Software to, or its use for the benefit of, any third party; or (6) Buyer's acquiring a trade secret (a) through improper means; (b) under circumstances giving rise to a duty to maintain its secrecy or limit its use; or (c) from a person (other than Seller) who owed to the party asserting the claim a duty to maintain the secrecy or limit the use of the trade secret. Buyer will reimburse Seller for any costs or damages that result from these actions 1 to 6. If Seller receives information about an infringement claim related to the Software, Seller may do any of the following, at its expense and without obligation to do so: (i) procure the right to continue use of the Software, (ii) replace the Software with a functional equivalent and

(iii) modify the Software to make it non-infringing (including disabling the challenged functionality and under circumstances (ii) and (iii) Buyer will stop running the allegedly infringing software immediately).

(f) This warranty will apply for the period specified in (d) above, provided that: (1) the Software is not modified, changed, or altered by anyone other than Seller or its suppliers, unless authorized by Seller in writing; (2) there is no change by anyone other than Seller to the goods for which the Software is ordered; (3) the goods are in good operating order and are installed in a suitable operating environment; (4) the nonconformity is not caused by Buyer or any of their agents, servants, employees, or contractors, or any third party; (5) Buyer promptly notifies Seller in writing, within the period of time set forth in (d) above, of the nonconformity after it is discovered; and (6) all fees for the Software due to Seller have been paid. SELLER HEREBY DISCLAIMS ALL OTHER WARRANTIES, EXPRESS OR IMPLIED, WITH REGARD TO THE SOFTWARE, INCLUDING BUT NOT LIMITED TO IMPLIED WARRANTIES OF MERCHANTABILITY, FITNESS FOR A PARTICULAR PURPOSE, COURSE OF DEALING AND USAGE OF TRADE.

(g) Buyer and successors of Buyer are limited to the remedies specified in this paragraph 10 and shall have no others for a nonconformity in the Software. Buyer agrees that these remedies provide Buyer and its successors with a minimum adequate remedy and are their exclusive remedies, whether Buyer's or successors' remedies are based on contract, warranty, tort (including negligence), strict liability, indemnity, or any other legal theory, and whether arising out of warranties, representations, instructions, operating documentation, installations, or non-conformities from any cause.

(h) Unless otherwise provided in this Agreement, the fees for this Software license are included in the purchase price of the Products. Any subsequent modifications or enhancements to the Software made by Seller are, at Seller's option, subject to a fee.

11. TERMINATION

Buyer may only terminate its order upon written notice to Seller and upon payment to Seller of Seller's termination charges, which shall be specified to Buyer and shall take into account among other things expenses (direct and indirect) incurred and commitments already made by Seller and an appropriate profit; provided, that in no event shall Seller's termination charges be less than 25% of the contract price. Seller shall have the right to suspend and/or terminate its obligations under this Agreement if payment is not received within 30 days of due date. In the event of the bankruptcy or insolvency of Buyer or in the event of any bankruptcy or insolvency proceeding brought by or against Buyer, Seller shall be entitled to terminate any order outstanding at any time during the period allowed for filing claims against the estate and shall receive reimbursement for its cancellation charges.

12. CONFIDENTIALITY

Buyer acknowledges that the information which Seller submits to Buyer in connection with this quotation, acknowledgment or performance of this Agreement includes Seller's confidential and proprietary information, both of a technical and commercial nature. Buyer agrees not to disclose such information to third parties without Seller's prior written consent. Seller grants to Buyer a non-exclusive, royalty-free, perpetual license to use Seller's confidential and proprietary information for purposes of this Agreement and the Products that are the subject hereof only. Buyer further agrees not to permit any third party to fabricate the Products or any parts thereof from Seller's drawings or to use the drawings other than in connection with this Agreement. Buyer will defend and indemnify Seller from any claim, suit or liability based on personal injury (including death) or property damage related to any Product or part thereof which is fabricated by a third party without Seller's prior written consent and from and against related costs, charges and expenses (including attorneys fees). All copies of Seller's drawings shall remain Seller's property and may be reclaimed by Seller at any time.

13. END USER

If Buyer is not the end user of the Products sold hereunder (the "End User"), then Buyer will use its best efforts to obtain the End User's written consent to be bound to Seller by the provisions hereof. If Buyer does not obtain such End User's consent, Buyer shall defend and indemnify Seller and Seller's agents, employees, subcontractors and suppliers from any action, liability, cost, loss, or expense for which Seller would not have been liable or from which Seller would have been indemnified if Buyer had obtained such End User's consent.

14. FORCE MAJEURE

(a) Force Majeure Defined. For the purpose of this Agreement "Force Majeure" will mean all unforeseeable events, beyond the reasonable control of either party which affect the performance of this Agreement, including, without limitation, acts of God, acts or advisories of governmental or quasi-governmental authorities, laws or regulations, strikes, lockouts or other industrial disturbances, acts of public enemy, wars, insurrections, riots, epidemics, pandemics, outbreaks of infectious disease or other threats to public health, lightning, earthquakes, fires, storms, severe weather, floods, sabotage, delays in transportation, rejection of main forgings and castings, lack of available shipping by land, sea or air, lack of dock lighterage or loading or unloading facilities, inability to obtain labor or materials from usual sources, serious accidents involving the work of suppliers or sub-suppliers, thefts and explosions.

(b) Suspension of Obligations. If either Buyer or Seller is unable to carry out its obligations under this Agreement due to Force Majeure, other than the obligation to make payments due hereunder, and the party affected promptly notifies the other of such delay, then all obligations that are affected by Force Majeure will be suspended or reduced for the period of Force Majeure and for such additional time as is required to resume the performance of its obligations, and the delivery schedule will be adjusted to account for the delay.

(c) Option to Terminate. If the period of suspension or reduction of operations will extend for more than four (4) consecutive months or periods of suspension or reduction total more than six (6) months in any twelve (12) month period, then either Buyer or Seller may terminate this Agreement.

15. INDEMNIFICATION AND INSURANCE

(a) Indemnification. Seller agrees to defend and indemnify Buyer from and against any third-party claim for bodily injury or physical property damage ("Loss") arising in connection with the Products provided by Seller hereunder or the work performed by Seller hereunder, but only to the extent such Loss has been caused by the negligence, willful misconduct or other legal fault ("Fault") of Seller. Buyer shall promptly tender the defense of any such third-party claim to Seller. Seller shall be entitled to control the defense and resolution of such claim, provided that Buyer shall be entitled to be represented in the matter by counsel of its choosing at Buyer's sole expense. Where such Loss results from the Fault of both Seller and Buyer or a third party, then Seller's defense and indemnity obligation shall be limited to the proportion of the Loss that Seller's Fault bears to the total Fault.

(b) Insurance. Seller shall maintain commercial general liability insurance with limits of not less than $2,000,000 per occurrence and in the aggregate covering claims for bodily injury (including death) and physical property damage arising out of the Products. Seller will provide a Certificate of Insurance certifying the existence of such coverages upon request.

16. GENERAL

(a) Seller represents that any Products or parts thereof manufactured by Seller will be produced in compliance with all applicable federal, state and local laws applicable to their manufacture and in accordance with Seller's engineering standards. Seller shall not be liable for failure of the Products to comply with any other specifications, standards, laws or regulations.

(b) This Agreement shall inure only to the benefit of Buyer and Seller and their respective successors and assigns. Any assignment of this Agreement or any of the rights or obligations hereunder, by either party without the written consent of the other party shall be void.

(c) This Agreement contains the entire and only agreement between the parties with respect to the subject matter hereof and supersedes all prior oral and written understandings between Buyer and Seller concerning the Products and any prior course of dealings or usage of the trade not expressly incorporated herein.

(d) This Agreement may be modified, supplemented or amended only by a writing signed by an authorized representative of Seller. Seller's waiver of any breach by Buyer of any terms of this Agreement must also be in writing and any waiver by Seller or failure by Seller to enforce any of the terms and conditions of this Agreement at any time, shall not affect, limit or waive Seller's right thereafter to enforce and compel strict compliance with every term and condition thereof.

(e) (i) If the Products are delivered or performed in the United States, this Agreement and the performance thereof will be governed by and construed according to the laws of the State of Georgia.

(ii) In the circumstances of (i) above, any controversy or claim arising out of or relating to this Agreement, or the breach thereof, or to the Products provided pursuant hereto, shall be definitively settled by arbitration, to the exclusion of courts of law, administered by the American Arbitration Association ("AAA") in accordance with its Construction Industry Arbitration Rules in force at the time this Agreement is signed and to which the parties declare they will adhere (the "AAA Rules"), and judgment on the award rendered by the arbitrator(s) may be entered in any court having jurisdiction over the party against whom enforcement is sought or having jurisdiction over any of such party's assets. The arbitration shall be conducted in Atlanta, Georgia by a panel of three members, one of whom will be appointed by each of Buyer and Seller and the third of whom will be the chairman of the panel and will be appointed by mutual agreement of the two party-appointed arbitrators. All arbitrators must be persons who are not employees, agents, or former employees or agents of either party. In the event of failure of the two party-appointed arbitrators to agree within forty-five (45) days after submission of the dispute to arbitration upon the appointment of the third arbitrator, the third arbitrator will be appointed by the AAA in accordance with the AAA Rules. In the event that either of Buyer or Seller fails to appoint an arbitrator within thirty (30) days after submission of the dispute to arbitration, such arbitrator, as well as the third arbitrator, will be appointed by the AAA in accordance with the AAA Rules.

(f) (i) If the Products are delivered or performed in Canada, this Agreement and the performance thereof will be governed by and construed according to the laws of the Province of New Brunswick.

(ii) In the circumstances of (i) above, any controversy or claim arising out of or relating to this Agreement, or the breach thereof, or to the Products provided pursuant hereto, shall be definitively settled under the auspices of the Canadian Commercial Arbitration Centre ("CCAC"), by means of arbitration and to the exclusion of courts of law, in accordance with its General Commercial Arbitration Rules in force at the time the Agreement is signed and to which the parties declare they will adhere (the "CCAC Rules"), and judgment on the award rendered by the arbitrator(s) may be entered in any court having jurisdiction over the party against whom enforcement is sought or having jurisdiction over any of such party's assets. The arbitration shall be conducted in Saint John, New Brunswick by a panel of three arbitrators, one of whom will be appointed by each of Buyer and Seller and the third of whom will be the chairman of the arbitral tribunal and will be appointed by mutual agreement of the two party-appointed arbitrators. All arbitrators must be persons who are not employees, agents, or former employees or agents of either party. In the event of failure of the two party-appointed arbitrators to agree within forty-five (45) days after submission of the dispute to arbitration upon the appointment of the third arbitrator, the third arbitrator will be appointed by the CCAC in accordance with the CCAC Rules. In the event that either of Buyer or Seller fails to appoint an arbitrator within thirty (30) days after submission of the dispute to arbitration, such arbitrator, as well as the third arbitrator, will be appointed by the CCAC in accordance with the CCAC Rules.

(g) The parties hereto have required that this Agreement be drawn up in English. Les parties aux présentes ont exigé que la présente convention soit rédigée en anglais.

Jan 2013 Rev.

E. Commercial Conditions

Terms and Conditions

This price proposal is based on the attached Andritz Separation, Inc. “Standard Terms and Conditions of Sale”.

Special Information

- Price quoted includes freight to jobsite
- Prices do not include any unloading or any applicable fees or taxes (Local, Federal, or Final Destination).
- Quotation is valid for ninety (90) days.
- All prices quoted in U.S. dollars.

Terms of Payment, 30 Days Net

- 15% of contract value with receipt of acknowledged copy of purchase order
- 20% of contract value with60 days after order
- 55% of equipment value upon notice of readiness of shipment
- 10% of contract value upon performance acceptance, not to exceed 90 days from the date of delivery.

Approval and Certified Drawings

The package that constitutes “Drawings for Approval and Certified Drawings” is comprised of the following. For invoicing purposes, this list is complete. However, additional drawings may be submitted, but not considered part of the “Approval” process.

• Foundation drawing
• Connection details (piping)
• Pneumatic/electric schematic, panel layouts

Approval drawings will be shipped approximately 4 - 6 weeks after receipt of purchase order. Certified drawings will be shipped approximately 2 weeks after receipt of approval drawings.

Shipment

ANDRITZ shipment is 18-20 weeks from receipt of order.

Engineering

Following are the major engineering services provided by Andritz with this Contract:

a). General arrangement drawings of equipment supplied by Andritz designed for installation;

b). Material balance information required for sizing of process control instrumentation;

c). Machine outline drawings, complete with piping and writing requirement;

d). Electrical and pneumatic panel and wiring drawings, if provided by Andritz;

e). Operating and maintenance manuals, including spare parts lists;

f). Motor and drive list;

g). Sequence of operation.

Project Management

Andritz will appoint a Project Manager for the duration of the contract. Project Management services are included in this package and are as follows:

a). Production of a complete critical path project schedule for ANDRITZ equipment;

b). Coordinate with the customer's Engineering and Andritz Engineering on system design and drawing schedule commitments;

c). Coordinate with manufacturing on material procurement and construction to ensure ANDRITZ commitments are maintained.

Erection, Training, and Start-Up Assistant

ANDRITZ will provide additional erection and start-up supervision for which the purchaser shall pay $1,100.00/day (US) plus expenses, eight (8) hours/day.

At the request of the Purchaser, overtime service will be provided at a rate of 1.5 times quoted rates for weekdays and 2.0 times quoted rates for weekends.

Expenses are defined as the cost of travel from Seller's plant to the point of installation and return, together with all living expenses during the period of service.

The above charges shall be made for time involved including delays which are beyond the Seller's control.

Equipment Standard

Any deviations from the ANDRITZ standard mechanical and electrical specification, which are not the owner's preference, must be further discussed. Refer to the Andritz standard specifications enclosed.

Supplies and Services NOT Included in this Quotation :

Specifically the ANDRITZ scope of supply does NOT include the following items as may be necessary for equipment installation & operation to the performance levels specified:

- civil engineering, design & supply of structural steel & concrete as needed for support of the ANDRITZ supplied equipment,
- polymer, flocculation systems, piping, controls etc.,
- slurry pumps, piping, valves, nor controls nor indication of flows,
- structural steel supports for Gravity Table, or any associated walkways, handrails, stairs, ladders, etc., as will be required to service and operate the Gravity Table,
- MCC high voltage bus, field wiring, diagrams, etc.,
- piping, hoses, clamps, fittings, stands, etc. to shower pipes of ANDRITZ machines,
- drain hoses, pipes, clamps, fittings, etc. from ANDRITZ machines,
- instrumentation, flow, level nor pressure measurement devices for slurry, polymer water or air supply lines to the sludge dewatering equipment, or panels,
- SAMA diagrams, instrument lists, specifications nor selection criteria for instruments nor sensors,
- valves, piping fittings, elbows, hangers, straps, clamps, hoses, etc.,
- LIC, FIC, SIC, PID nor any process related type measuring instruments,
- field installation, tools, labor nor materials or tools to do same,
- field wiring, conduit, labor, etc. nor materials or tools to do same,
- maintenance tools, jigs, fixtures, etc. as required to service machine,
- lubricants, applicators, oilers, filters, etc. nor equipment to service machine

ANDRITZ SEPARATION INC.
STANDARD TERMS AND CONDITIONS OF SALE

1. TERMS APPLICABLE

The Terms and Conditions of Sale listed below are the exclusive terms and conditions applicable to quotations made and orders acknowledged by Andritz Separation Inc. **("Seller")** for the sales of products, equipment and parts relating thereto (**"Products").** This quotation or acknowledgment is expressly made conditional upon Buyer's assent to such terms and conditions. Any of Buyer's terms and conditions which are in addition to or different from those contained herein, which are not separately agreed to by Seller in writing, are hereby objected to and shall be of no effect. Objections to any terms and conditions contained herein shall be deemed waived if Seller does not receive written notice thereof within 20 days of the date of this quotation or acknowledgment. Buyer in any event will be deemed to have assented to the terms and conditions contained herein if delivery of any Product is accepted. The term "this Agreement" as used herein means this quotation or acknowledgment or purchase order, together with any attachment hereto, any documents expressly incorporated by reference and these Standard Terms and Conditions of Sale.

2. DELIVERY

Delivery dates are good faith estimates and do not mean that "time is of the essence". Buyer's failure to promptly make advance or interim payments, supply technical information, drawings and approvals will result in a commensurate delay in delivery. Upon and after delivery, title and risk of loss or damage to the Products shall be Buyer's. Unless otherwise agreed in writing by Seller, delivery of the Products hereunder will be made F.O.B., Seller's plant (or F.O.B., point of manufacture for any Product shipped direct to Buyer from any location other than Seller's plant).

3. WARRANTY

(a) Seller warrants to Buyer that the Products manufactured by it will be delivered free from defects in material and workmanship. This warranty shall commence upon delivery of the Products and shall expire on the earlier to occur of 12 months from initial operation of the Products and 18 months from delivery thereof (the "Warranty Period"). If during the Warranty Period Buyer discovers a defect in material or workmanship and gives Seller written notice thereof within 10 days of such discovery, Seller will either deliver to Buyer, a replacement part or repair the defect in place. Seller will have no warranty obligations under this paragraph 3(a): (i) if the Products have not been operated and maintained in accordance with generally approved industry practice and with Seller's specific written instructions; (ii) if the Products are used in connection with any mixture or substance or operating condition other than that for which they were designed; (iii) if Buyer fails to give Seller such written 10 day notice; (iv) if the Products are repaired by someone other than Seller or have been intentionally or accidentally damaged, or (v) for corrosion, erosion, ordinary wear and tear or in respect of any parts which by their nature are exposed to severe wear and tear or are considered expendable.

(b) Seller further warrants to Buyer that at delivery, the Products manufactured by it will be free of any liens or encumbrances. If there are any such liens or encumbrances, Seller will cause them to be discharged promptly after notification from Buyer of their existence.

(c) THE EXPRESS WARRANTIES SELLER MAKES IN THIS PARAGRAPH 3 ARE THE ONLY WARRANTIES IT WILL MAKE. THERE ARE NO OTHER WARRANTIES, WHETHER STATUTORY, ORAL,, EXPRESS OR IMPLIED. IN PARTICULAR, THERE ARE NO IMPLIED WARRANTIES OF MERCHANTABILITY OR FITNESS FOR A PARTICULAR PURPOSE.

(d) The remedies provided in paragraphs 3(a) and 3(b) are Buyer's exclusive remedy for breach of warranty.

(e) With respect to any Product or part thereof not manufactured by Seller, Seller shall pass on to Buyer only those warranties made to Seller by the manufacturer of such Product or part which are capable of being so passed on.

4. LIMITATION OF LIABILITY

The remedies of Buyer set forth herein are exclusive and the aggregate liability of Seller and its affiliated companies or subcontractors for any claim of any kind for any loss or damage resulting from, arising out of or connected with this Agreement or from the performance or breach thereof, or from the manufacture, sale, delivery, resale, repair or use of any Product, whether based on contract, warranty, tort (including negligence), fault, strict liability, indemnity, or otherwise, shall in no event exceed the price allocable to Product which gave rise to the claim. The foregoing not withstanding, if applicable, any claims for (a) delay shall not exceed 5% and (b) breach of performance guarantees shall not exceed 20% of the order price. In no event shall Seller or its affiliated companies or subcontractors be liable to Buyer or any party for special, incidental or consequential damages of any nature or for loss of profits or revenue or business opportunity, loss by reason of shutdown of facilities or inability to operate any facility at full capacity, or for increased expenses of plant operations. All liability of Seller under this Agreement for any claim of any kind shall terminate on that date which is the third anniversary of the date of this Agreement. The provisions of this Paragraph 4 shall supersede any inconsistent provisions in any instrument forming part of this Agreement.

5. TAXES

Seller's prices do not include any sales, use, excise or other taxes. In addition to the price specified herein, the amount of any present or future sales, use, excise or other tax applicable to the sale or use of the Products shall be billed to and paid by Buyer unless Buyer provides to Seller a tax-exemption certificate acceptable to the relevant taxing authorities.

6. SECURITY INTEREST

Seller shall retain a purchase money security interest and Buyer hereby grants Seller a lien upon and security interest in the Products until all payments hereunder have been made in full. Buyer acknowledges that Seller may file a Form UCC-1 financing statement and may take all other action it deems reasonably necessary to perfect and maintain such security interest in Seller and to protect Seller's interest in the Products.

7. SET OFF

Neither Buyer nor any of its affiliates shall have any right to set off claims against Seller or any of its affiliates for amounts owed under this Agreement or otherwise.

8. PATENTS

Unless the Products or any part thereof are designed to Buyer's specifications and provided the Product or any part thereof is not used in any manner other than as specified or approved by Seller in writing, (i) Seller shall defend against any suit or proceeding brought against Buyer to the extent based on a claim that any Product, or any part thereof, infringes any United States patent; provided Seller is notified promptly in writing and given the necessary authority, information and assistance for the defense of such suit or proceeding; (ii) Seller shall satisfy any judgment for damages entered against Buyer in such suit; and (iii) if such judgment enjoins Buyer from using any product or a part thereof, then Seller shall, at its option: (a) obtain for Buyer the right to continue using such Product or part; (b) eliminate the infringement by replacing or modifying all or part of the Products; or (c) take back such Product or part and refund to Buyer all payments on the purchase price which Seller has received, in which case neither Buyer nor Seller will have any claim against the other under this Agreement or arising out of the subject matter of this Agreement. The foregoing states Seller's entire liability for patent infringement by any Product or part thereof.

9. TERMINATION

Buyer may only terminate its order upon written notice to Seller and upon payment to Seller of Seller's termination charges, which shall be specified to Buyer and shall take into account among other things expenses (direct and indirect) incurred and commitments already made by Seller and an appropriate profit; provided, that in no event shall Seller's termination charges be less than 25% of the contract price. In the event of the bankruptcy or insolvency of Buyer or in the event of any bankruptcy or insolvency proceeding brought by or against Buyer, Seller shall be entitled to terminate any order outstanding at any time during the period allowed for filing claims against the estate and shall receive reimbursement for its cancellation charges.

10. CHANGES

Seller will not make changes in the Products unless Buyer and Seller have executed a written Change Order for such change. Such Change Order will include an appropriate adjustment to price and delivery terms. If the change impairs Seller's ability to satisfy any of its obligations to Buyer, the Change Order will include appropriate modifications to this Agreement. If, after the date of this quotation or acknowledgment, new or revised governmental requirements should require a change in the Products, the change will be subject to this paragraph 10.

11. CONFIDENTIALITY

Buyer acknowledges that the information which Seller submits to Buyer in connection with this quotation or acknowledgment includes Seller's confidential and proprietary information, both of a technical and commercial nature. Buyer agrees not to disclose such information to third parties without Seller's prior written consent. Seller grants to Buyer a non-exclusive, royalty-free, perpetual license to use Seller's confidential and proprietary information for purposes of this specific order and the Products that are the subject hereof only. Buyer further agrees not to permit any third party to fabricate the Products or any parts thereof from Seller's drawings or to use the drawings other than in connection with this specific order. Buyer will defend and indemnify Seller from any claim, suit or liability based on personal injury (including death) or property damage related to any Product or part thereof which is fabricated by a third party without Seller's prior written consent and from and against related costs, charges and expenses (including attorneys fees). All copies of Seller's drawings shall remain Seller's property and may be reclaimed by Seller at any time.

12. END USER

If Buyer is not the end user of the Products sold hereunder (the "End User"), then Buyer will use its best efforts to obtain the End User's written consent to be bound to Seller by the provisions of paragraphs 3, 4, 5 and 11 hereof. If Buyer does not obtain such End User's consent, Buyer shall defend and indemnify Seller and Seller's agents, employees, subcontractors and suppliers from any action, liability, cost, loss, or expense for which Seller would not have been liable or from which Seller would have been indemnified if Buyer had obtained such End User's consent.

13. FORCE MAJEURE

(a) Force Majeure Defined. For the purpose of this Agreement "Force Majeure" will mean all unforeseeable events, beyond the reasonable control of either party which affect the performance of this Agreement, including, without limitation, acts of God, acts or advisories of governmental or quasi-governmental authorities, laws or regulations, strikes, lockouts or other industrial disturbances, acts of public enemy, wars, insurrections, riots, epidemics, pandemics, outbreaks of infectious disease or other threats to public health, lightning, earthquakes, fires, storms, severe weather, floods, sabotage, delays in transportation, rejection of main forgings and castings, lack of available shipping by land, sea or air, lack of dock lighterage or loading or unloading facilities, inability to obtain labor or materials from usual sources, serious accidents involving the work of suppliers or sub-suppliers, thefts and explosions.

(b) Suspension of Obligations. If either Buyer or Seller is unable to carry out its obligations under this Agreement due to Force Majeure, other than the obligation to make payments due hereunder, and the party affected promptly notifies the other of such delay, then all obligations that are affected by Force Majeure will be suspended or reduced for the period of Force Majeure and for such additional time as is required to resume the performance of its obligations, and the delivery schedule will be adjusted to account for the delay.

(c) Option to Terminate. If the period of suspension or reduction of operations will extend for more than four (4) consecutive months or periods of suspension or reduction total more than six (6) months in any twelve (12) month period, then either Buyer or Seller may terminate this Agreement.

14. INDEMNIFICATION AND INSURANCE

(a) Indemnification. Seller agrees to defend and indemnify Buyer from and against any third-party claim for bodily injury or physical property damage ("Loss") arising in connection with the goods provided by Seller hereunder or the Work performed by Seller hereunder, but only to the extent such Loss has been caused by the negligence, willful misconduct or other legal fault ("Fault") of Seller. Buyer shall promptly tender the defense of any such third-party claim to Seller. Seller shall be entitled to control the defense and resolution of such claim, provided that Buyer shall be entitled to be represented in the matter by counsel of its choosing at Buyer's sole expense. Where such Loss results from the Fault of both Seller and Buyer or a third party, then Seller's defense and indemnity obligation shall be limited to the proportion of the Loss that Seller's Fault bears to the total Fault.

(b) Insurance. Seller shall maintain commercial general liability insurance with limits of not less than $2,000,000 per occurrence and in the aggregate covering claims for bodily injury (including death) and physical property damage arising out of the Work. Seller shall also provide workers' compensation insurance or the like as required by the laws of the jurisdiction where the Work will be performed, and owned and non-owned auto liability insurance with limits of not less than $1,000,000 combined single limit. Buyer shall be designated as an additional insured under Seller's commercial general liability insurance and auto liability insurance coverages, and Seller will provide a Certificate of Insurance certifying the existence of such coverages upon request.

15. GENERAL

(a) Seller represents that any Products or parts thereof manufactured by Seller will be produced in compliance with all applicable Federal, State and local laws applicable to their manufacture and in accordance with Seller's engineering standards. Seller shall not be liable for failure of the Products to comply with any other specifications, standards, laws or regulations

(b) This Agreement shall inure only to the benefit of Buyer and Seller and their respective successors and assigns. Any assignment of this Agreement or any of the rights or obligations hereunder, by either party without the written consent of the other party shall be void.

(c) This Agreement contains the entire and only agreement between the parties with respect to the subject matter hereof and supersedes all prior oral and written understandings between Buyer and Seller concerning the Products, and any prior course of dealings or usage of the trade not expressly incorporated herein.

(d) This Agreement (including these standard terms and conditions of sale) may be modified, supplemented or amended only by a writing signed by an authorized representative of Seller. Seller's waiver of any breach by Buyer of any terms of this Agreement must also be in writing and any waiver by Seller or failure by Seller to enforce any of the terms and conditions of this Agreement at any time, shall not affect, limit or waive Seller's right thereafter to enforce and compel strict compliance with every term and condition thereof.

(e) This Agreement and the performance thereof will be governed by and construed according to the laws of the State of Texas. The parties hereto irrevocably submit to the jurisdiction of the Federal and State courts sitting in Tarrant County, Texas and waive any claims as to inconvenient forum. In the event this Agreement pertains to the sale of any goods outside the United States, the parties agree that the United Nations Convention for the International Sale of Goods shall not apply to this Agreement.

REV. 2/08

1.0 Meter GRAVITY TABLE
MACHINE SPECIFICATIONS

General Machine Technical Data

Overall Length as installed w/Distribution Box	**233"**
Overall Width	**83"**
Overall Height	**54"**
Overall Belt Width	**44"**
Actual Belt Working Width	**42"**
Dry Weight	**7,292 lbs.**

Effective Filtration Areas

Gravity Zone	**48.9 sq. ft.**

Utilities

Total Connected Load	**3.0 HP @ 80 fpm Nominal Belt Speed**
Washwater Requirement	**24 gpm @ 120 psig**
Air Requirement	**2.0 cfm @ 90 psig**

MAJOR COMPONENTS

Main Structural Frame	The main structural frame shall be ASTM A36 carbon steel and constructed of members conservatively designed to minimize deflection. The main structural frame shall be constructed of members having a minimum thickness of ¼ inch. The gravity belt thickener frame shall provide a minimum safety factor under maximum load of three times the design yield strength of any member. The frame shall be galvanized per ASTM A123. Moment of inertia is **17.24** in^4 in the major axis.
Rolls	A-106 B pipe or A-519 steel tubing with 8620 steel double end-plate journals; Buna-N or Rilsan covered.
Bearings	Spherical roller type, L-10 rated for a minimum **1,600,000** operating hours
Belt Tracking and Tensioning	Pneumatically controlled for automatic operations.
Belt	Seamed design; chosen for the application.
Belt Shower	Pipe with recessed nozzles manually cleaned with hand-wheel operated wire brush.
Belt Doctor Blade	UHMW polyethylene; rubber tensioned holding mechanism.
Motor/Drive Type	AC variable speed type.
Control Panel	NEMA 4X

316L STAINLESS STEEL COMPONENTS

Headbox Assembly
Gravity Zone Side Walls
Inline Mixer & Retention Tank
Filtrate Pan
Thrust Rods, Pinion & Gear Assembly
Shower Housing, Pipe, Nozzle & Wire Brush
All Nuts, Bolts & Fasteners

SECTION 11362- GRAVITY BELT THICKENER SYSTEM

PART 1.00 GENERAL

1.01 SUMMARY

The contractor shall furnish and install the gravity belt thickener and associated piping, valves, controls, wiring, and appurtenances as specified and shown on the drawings. The gravity belt thickener system specified in this section shall be provided by a single manufacturer to ensure coordination and compatibility of equipment. Compliance with the requirements and stipulations specified herein may necessitate modifications to the manufacturers standard equipment. In addition, the contractor shall be responsible for insuring a complete and operable gravity belt thickener system and shall establish the exact limits of work between the contractor and gravity belt thickener supplier.

1.02 REFERENCES

The design, manufacture, and installation of this equipment shall meet or exceed the applicable provisions and recommendations of the following codes and standards:

A. AGMA, American Gear Manufacturers Association.

B. ASME, American Society of Mechanical Engineers.

C. ASTM, American Society of Testing and Materials.

D. ANSI, American National Standards Institute.

E. IEEE, Institute of Electrical and Electronics Engineers.

F. NEC, National Electrical Code.

G. OSHA, Occupational Safety and Health Act.

1.03 DEFINITIONS

A. Solids Capture

The percent of the feed solids that remain in the thickened end product on a weight basis.

For purposes of this specification, "Capture" is defined as:

% Capture = (C/F) [(F-E)/(C-E)] x 100%

Where: C = Thickened Sludge Total Solids (% TS)

F = Feed (% TSS); excluding any dilution from polymer solution flow

E = Filtrate (% TSS); excluding any dilution from polymer solution and belt wash water flows

B. Polymer Consumption

To be based on 100% active polymer.

1.04 SYSTEM DESCRIPTION

A. Design Criteria

The gravity belt thickener shall be designed to extract water from the sludge specified herein after conditioning of the sludge with a polymer solution. The process of dewatering shall produce a finished sludge product meeting the following performance requirements.

B. Performance Requirements

The gravity belt thickener shall operate within the design conditions based on "Conditions of Service" Section 1.08 and meet the following performance criteria:

PARAMETER	PERFORMANCE CRITERIA
1. Minimum thickened sludge solids (% TS)	
2. Minimum solids capture (% SS).....	
3. Maximum polymer cost ($/dry ton of sludge)	
4. Minimum hydraulic loading (GPM).....	
5. Minimum solids loadings (dry lbs/hr).....	
6. Number of gravity belt thickener(es).....	
7. Effective working width per unit	1.0 Meter

1.05 SUBMITTALS

A. Complete assembly, foundation, and installation drawings, together with detailed specifications and data covering materials used, power drive assembly, parts, instrumentation devices and other accessories forming a part of the equipment furnished shall be submitted for review. The following information shall also be submitted with shop drawings.

1. Drawings showing the manufacturers recommended equipment base(s), including dimensions, weights, loadings, drainage piping and other information necessary to install the equipment.

2. Structural calculations demonstrating compliance with the structural frame design specification.

3. Details of coating system for structural frame, rolls and other metallic components.

4. Details of sludge/polymer mixer assembly.

5. Details of gravity section including inlet feed chute, plow assemblies, belt support method, sludge retaining barriers, etc.

6. Details of filtrate drainage/collection system.

7. Details of belt specification.

8. Statement of minimum hours of belt life warranted.

9. Details of belt drive assembly including belt speed range, drive configuration, speed reducer, motor name plate data, and drive controller features.

10. Details of belt tracking/tensioning system including schematics, utility requirements, pneumatic or hydraulic components, valves, piping and control devices.

11. Details of the doctor blade assembly.

12. Details of the belt wash station including washwater supply requirements (flow and pressure).

13. Details of roller assemblies including type of construction, materials, dimensions, deflection calculations and coatings.

14. Details of bearings for roller assemblies including bearing manufacturer, type housing, and AFBMA L-10 life calculations.

15. Details of electrical components including enclosures, and machine mounted components.

16. Elevation of local control panel and operator control station showing panel mounted devices. Provide details of power distribution and full load current draw of panel. Provide list of all terminations required to receive inputs or a transmit inputs from the local control panel.

17. Nameplate data of each electric motor proposed to be furnished with the equipment package.

18. Wiring diagrams of field connections with identification of terminations between local panel, junction boxes, equipment items, instrument devices, and the like.

19. Complete electrical control schematic diagram.

20. List of spare parts to be furnished.

21. List any exceptions or deviations from the contact documents.

22. Statement of machine warranties.

23. Control philosophy provided in both written and schematic form.

B. Owners Manuals. Operations and maintenance information and equipment maintenance summary sheets shall be furnished for the equipment specified herein.

C. A Manufacturers Certificate of satisfactory installation is required for work under this section.

1.06 QUALITY ASSURANCE

A. Other than the named supplier, all manufacturers proposing equipment described herein, shall provide a detailed submittal package which shall consist, at a minimum, all information and details prescribed in Section 1.04 of this specification. All pre-qualification submittals shall be submitted to the Engineer at least 30 days prior to the bid date.

B. If submitted equipment requires arrangement differing from that indicated on the drawings or specified, prepare and submit for review complete structural, mechanical, and electrical drawings and equipment lists showing all necessary changes and embodying all special features of equipment proposed. Any changes are at no additional compensation and the Contractor shall be responsible for all engineering costs of redesign by the Engineer if necessary.

C. Only those manufacturers capable of providing irrefutable evidence of a minimum of ten (10) years experience in the manufacture and installation of the exact model or equivalent model meeting the filtration area requirements shall be considered.

1.07 DELIVERY, STORAGE & HANDLING

A. Items to be shipped as complete assemblies except where partial disassembly is required by transportation regulations or for protection of components.

B. Dewatering belt to be shipped separately.

C. Spare Parts.

1. Pack in containers bearing labels clearly designating contents and pieces of equipment for which the part is intended. Each part shall be identified with a tag bearing its part number and a part description.
2. Delivered at same time as equipment.

1.08 CONDITIONS OF SERVICE

Condition of sludge feed shall be based on the following design requirements as specified by the customer:

A. Type of Sludge .....

B. Feed Solids Concentrations (% TSS) .....

C. Solids Loading (TS/hour) .....

D. Temperature (°F) .....

E. Ash Content (% by weight) .....

F. Operating Cycle (hrs/day/week) .....

1.09 SEQUENCING & SCHEDULING (N/A)

1.10 WARRANTY

The gravity belt thickener manufacturer shall warrant the following components:

A. The manufacturer shall warrant against any defects in material or workmanship to the gravity belt thickener framework and coating for a period of 18 months from date of delivery.

B. The manufacturer shall replace any bearing that fails during the prescribed warranty period, provided the owner has lubricated and otherwise maintained the bearing in accordance with the intervals and procedures set forth in the manufacturers operations and maintenance instruction manual. The complete bearing assembly as specified herein shall be warranted for a period of 18 months from the date of delivery.

C. The manufacturer shall replace or repair any roller or roller coating that fails during the warranty period, provided the roller or roller coating has not been damaged by external action such as impact, fire, weld splatter, etc. beyond the manufacturers control. The manufacturer shall warrant the roller and roller coating to be free from defects in material and workmanship for a period of 18 months from the date of delivery. Neither the rollers nor coating shall require preventative maintenance during the warranty period.

1.11 MAINTENANCE

A. Spare Parts

The gravity belt thickener shall be provided with the following spare parts.

1. One (1) complete set of urethane containment seals for the entire gravity belt thickener.

2. One (1) belt.

3. One (1) doctor blade.

4. One (1) of each size and type bearing used.

PART 2.00 PRODUCTS

2.01 MANUFACTURERS

The gravity belt thickener system shall be the **ANDRITZ-Ruthner 1.0 meter GRAVITY TABLE** meeting these specifications.

2.02 MATERIALS (N/A)

2.03 MANUFACTURED UNITS (N/A)

2.04 EQUIPMENT

A. The gravity belt thickener shall be designed to extract water from the sludge type specified herein, after conditioning of the sludge with an appropriate flocculant. This process of dewatering shall be accomplished by the combination of chemical conditioning of the sludge and drainage of free water in the horizontal gravity zone. The gravity belt thickener shall have a minimum effective dewatering width of **1.0 meter** and a minimum effective filtration area of 48.9 square feet. All moving wetted parts, and all wetted parts on which moving parts contact, shall be fully corrosion resistant for the material being processed, as specified herein. All

components of the gravity belt thickener shall be designed to withstand all stresses which may occur during erection and operation.

B. The gravity belt thickener construction shall allow easy access to internal components, operational adjustments and routine maintenance shall be possible without taking the machine out of service. Any disassembly required for maintenance and repair shall be possible within the clearances shown on the drawings.

C. The gravity belt thickener shall be delivered to the job site as a completely assembled package and ready for service after connection of piping, wiring and utilities. All piping provided with the gravity belt thickener shall be schedule 40 PVC or flexible hose.

D. The overall length, width, height, of the fully assembled gravity belt thickener shall not exceed **233", 88" 54"** respectively. Minimum dry weight of the unit shall be **7,292** pounds.

E. The gravity belt thickener shall be designed such that the "sludge" side of the belt does not come in contact with roller face to prevent the accumulation of material on the roller assemblies.

2.05 COMPONENTS

Each gravity belt thickener shall include structural frame, sludge/polymer mixer, sludge inlet assembly, gravity drainage section, filtrate drainage system, belt, belt drive assembly, belt tracking/tensioning systems, doctor blade, belt wash station, roller assemblies, bearings, safety devices, electrical components, and any other specified and necessary components.

A. STRUCTURAL FRAME

1. The design of the structural frame shall be based on a minimum belt tension of 40 lb. per linear inch of belt width. The structural frame shall be constructed of welded and bolted structural steel members. The frame shall be designed such that roller assemblies can be removed from the side or end of the gravity belt thickener without removing structural members or repositioning more than one (1) roller assembly.

2. The main structural frame shall be ASTM A36 carbon steel and constructed of members conservatively designed to minimize deflection. The main structural frame shall be constructed of members having a minimum thickness of ¼ inch. The gravity belt thickener frame shall provide a minimum safety factor under maximum load of three times the design yield strength of any member. The frame shall be galvanized per ASTM A123. Moment of inertia is **17.24** in^4 in the major axis.

3. All gravity belt thickener loads imposed on the building floor shall be vertical. All horizontal loads shall be contained within the structural frame. The gravity belt thickener frame shall be designed to interface with and facilitate the installation of access platforms along each longitudinal side of the gravity belt thickener.

4. The structural frame shall be provided with "welded in place" lifting eyes designed to lift the fully assembled gravity belt thickener.

5. All bolted interfaces shall be precision drills. Slot fitted frame interfaces are not acceptable.

B. SLUDGE/POLYMER MIXER

1. Each gravity belt thickener shall be provided with a sludge/polymer mixer for mixing and flocculation of feed sludge conditioned with polymer. Sludge mixer shall be of the variable orifice venturi type. Static mixers with stationary baffles or tanks with mechanical mixers shall not be acceptable.

2. Each sludge/polymer mixer assembly shall include an inline four (4) port UHMW polyethylene polymer injection ring, flow splitting manifold, tubing and fittings between the injection ring and manifold. Each polymer injection ring shall inject polymer at a minimum of four (4) points located 90° apart around the circumference of the ring. The inside diameter of the ring shall not be less than the inside diameter of the sludge feed piping. Each polymer injection port shall be a 1/2" N.P.T. threaded connection and connect with an 5/8" I.D. transparent tube which shall connect with each of the four (4) ports located on the flow splitting manifold.

3. The venturi mixer shall be constructed of 316L stainless steel and provided with a check valve type flapper with an external adjustable stop nut and counterweight. The mixer shall be equipped with ANSI compatible flanges at each end and a removable side plate for inspection and cleaning.

4. The sludge feed piping to the gravity belt thickener shall be provided with three (3) polymer injection locations as shown on the drawings.

C. GRAVITY DRAINAGE SECTION

1. The gravity belt thickener shall be provided with a sludge inlet assembly consisting of a retention tank and a distribution chute designed to uniformly distribute the conditioned feed sludge across the entire working width of the gravity section. The entire assembly and necessary supports and hardware shall be constructed of 316L stainless steel.

2. The gravity belt thickener shall have a horizontal gravity drainage section consisting of a minimum working belt area of 48.9 sq. ft. Side skirts constructed of 14 gauge stainless steel shall be mounted on both sides of the belt and at the sludge feed end of the gravity section. The side skirts shall be equipped with urethane seals to prevent spillage of sludge. The seals shall be mounted via a slide type bracket that utilizes a set screw to prevent movement.

3. The belt, while in the gravity dewatering section, shall ride on top and be supported by a series of UHMW polyethylene replaceable wear strips held in place and supported by a 316L stainless steel support bracket with a minimum deflection of .060" at mid span under full sludge load. The support shall be a minimum 2" wider than the belt on each side. Wear strips shall be replaceable without removing or disassembly of gravity section sidewalls and plow assembly.

4. There shall be a minimum of eight (8) rows of plows in the gravity section. Each plow shall continuously contact the belt and be designed such that it continually lifts and rolls the sludge. Designs which divert the sludge from side to side are not acceptable. Each

set of plows shall be mounted on a galvanized steel horizontal support bar. Plows shall be liftable from the belt while the gravity belt thickener is in operation.

D. FILTRATE COLLECTION/PIPING

1. The gravity belt thickener shall be provided with drainage pans and piping to collect and discharge dewatered filtrate from the gravity drainage. All filtrate shall be captured and contained by the drainage pans without spilling to the floor. The drainage pans shall extend a minimum of 3" beyond the belt width on both sides and shall have a minimum 1" depth at any given point. The drainage pans shall be constructed of a minimum 14 gauge type 316L stainless steel. The use of fiberglass or any non-specified material of construction is not acceptable.

2. The low point of any drainage pan shall be provided with a minimum 6" dia. connection for drain piping. Drainage piping shall be Sch. 40 PVC and shall be routed from each pan and shall terminate within the confines of the filtrate sump. The drainage piping shall be vented and adequately sized to prevent flow restrictions.

E. DEWATERING BELT

1. The gravity belt thickener shall incorporate the use of a thickening belt. The belt shall be seamed and fabricated of monofilament polyester, wear-resistant plastic materials. The mesh design shall be selected for optimum dewatering of the sludge to be processed with minimum blinding of the filter belt.

2. The belt and connecting splice shall be designed for a minimum tensile strength equal to five times the normal maximum dynamic tension to which the belt shall be subjected. The splice shall be designed to fail before the belt and shall be constructed of type 316L stainless steel.

3. The belt shall have a width as specified and shall have a minimum life of 2,000 hours continuous operation at the rated design conditions. The belt shall be designed for ease of replacement with a minimum of down time.

F BELT DRIVE ASSEMBLY

1. The gravity belt thickener shall be provided with one belt drive assembly. The drive assembly shall not be positioned in any area, which is not readily accessible or subjects the drive assemblies to excess moisture and other undesirable environmental conditions. The drive range shall be 50% to 150% of designed operating speed based upon the required performance. The drive assembly shall be coupled to the drive rollers with shaft mounted helical gear reducers. All exposed gears and couplings shall be enclosed in safety guards.

2. The drive assembly shall consist of a speed reducer, with an integrally mounted C-face motor and panel mounted variable frequency drive controller for belt speed adjustment.

3. The gravity belt thickener speed reducer shall be a shaft mounted, right angle, helical type gear reducer. Worm gear type reducers are not acceptable. The speed reducer

housing shall be of cast iron or fabricated steel welded construction and shall be totally enclosed, dust proof, and oil tight.

4. The integrally mounted electric motor shall be rated for a maximum of **3.0** Hp and maximum speed of 1800 RPM. Motor shall provide full load torque from 10 to 100 percent of the maximum speed of the drive motor.

G. PNEUMATIC/HYDRAULIC SYSTEM

1. The gravity belt thickener shall be provided with pneumatic or hydraulic belt tracking and tensioning systems to ensure reliable operation. The belt tracking and tensioning systems shall be of the continuous and non-incremental tracking type. Mechanical limit sensors, electric servo type or systems which do not offer precision adjustment continuously are not acceptable.

2. The pneumatic control system shall consist of a Nema 4X stainless steel wall mounted panel. This control station will include: loss pressure switch, filter regulators-lubricator, glycerin filled gauges, control regulators, valves and tubing as required to provide a complete control system. The pneumatic tubing and fittings shall be 1/4" polyurethane. All tubing shall be firmly attached and routed to eliminate obstruction and terminate at a central manifold block. The air compressor system shall be sized as required by the gravity belt thickener manufacturer, but shall provide a minimum air pressure of 90 PSI. The compressor and receiver shall be properly sized so as not to run continuously, nor cycle on and off frequently at the maximum air usage rate.

3. The hydraulic control system shall consist of pumps, reservoirs, coolers, filters and pressure relief valves. All hydraulic tubing and reservoir housings shall be 316L stainless steel and rated a minimum of 2000 psig. Manufacturers requiring hydraulic cylinders shall supply 316L stainless steel cylinder housings and pistons.

H. BELT TRACKING SYSTEM

1. The belt tracking system shall automatically and continuously align and maintain the belt position on the rollers during operation of the gravity belt thickener. The belt position shall be monitored by a stainless steel sensing arm which shall continually contact the belt edge. The sensing arm shall be mechanically linked to a pilot valve which controls the tracking actuator.

2. Pneumatic actuators shall be convoluted type air bellows to provide uniform non-stick movement of the actuator shaft. Cylinders utilizing pressure containment seals are not acceptable. Hydraulic cylinders shall have 316L stainless steel housings, pistons and slide bar. Nickel/chrome alloys and FRP housings are not acceptable.

3. The tracking actuator shall be connected to a pivoting belt alignment roller, which shall be continuously adjusted by the actuator to maintain proper belt alignment. No exceptions to this belt tracking system will be allowed.

4. One (1) limit switch shall be provided on each side of the machine to detect major misalignment of the belt and relay an alarm signal. Each limit switch shall be housed in a NEMA 4X enclosure.

I. BELT TENSIONING SYSTEM

1. The gravity belt thickener tensioning system shall be capable of adjusting belt tension to a maximum of 40 lbs. per linear inch of belt width. Belt tension adjustments shall be manually controlled and shall be capable of adjustment while the gravity belt thickener is operating.

2. The belt tensioning system shall consist of a belt tensioning roller equipped with pneumatic air bellow actuators or hydraulic 316L stainless steel actuators on each tension roller end. The operation of the belt tensioning system shall be designed to ensure simultaneous and parallel movement of the tensioning roller ends during adjustment and to accommodate up to 3 percent belt elongation. Center pivoting type assembly with only one pressuring device per roll are not acceptable.

3. The tensioning system shall be designed so that the actuators for each independent tension roll is mechanically interconnected so that one side of the roll cannot extend further than the other. All interconnecting parts shall be 316L stainless steel.

4. A pressure gauge shall be provided for both upper and lower belt tension regulators. Limits of the belt tension shall be located on the face of the control panel.

J. DOCTOR BLADE AND DISCHARGE CHUTE

1. The gravity belt thickener shall be provided with a doctor blade to assist the separation of cake from the belt at the point of cake discharge. The doctor blade and blade holder shall be designed with sufficient stiffness to prevent warping, bowing or distortion of the blade.

2. The doctor blade shall be reversible, replaceable, and shall be constructed of UHMW polyethylene, polyurethane, or similar material. Fiberglass reinforced plastic is not acceptable.

3. Doctor blade tensioning shall be applied by a tensioning device with provisions to adjust the force of the doctor blade against the belt. The doctor blade assembly shall be designed to allow quick release of the doctor blade from the belt for inspection and service.

K. BELT WASH STATION

1. The gravity belt thickener shall be provided with a belt wash station, which shall clean the full width of the belt after the thickened sludge has been discharged.

2. Potable water at a minimum pressure of 120 psig shall be provided. The total washwater demand shall not exceed 24 gpm. The belt wash station shall consist of a type 316L stainless steel washwater spray pipe with replaceable spray nozzles and internal

handwheel actuated wire brush to facilitate periodic cleaning of the nozzles. Belt wash spray pipe shall be manufactured by Appleton Manufacturing, Inc., or approved equal.

3. Each belt wash station shall be enclosed in a type 316L stainless steel, 14 gauge minimum, enclosure with replaceable urethane seals which shall contain all spray and mist.

L ROLLER ASSEMBLIES

1. All rollers shall be double separated plate stub shaft design. The stub end shafts and plates must be welded in place. Bolted in place stub end roller shafts are unacceptable. The drive roll shafts shall have a minimum diameter of 2.88" inside the roller and a minimum of 1.77" journal diameter. The minimum safety factor in relation to the rollers yield point shall be 5 at a maximum loading rate of 40 PLI belt tension. All rollers shall be designed to have a maximum deflection of .010" at mid span when under maximum loading. Rollers shall have a minimum wall thickness of 1/2" and be constructed of A-106 pipe or A519 mechanical tubing. Maximum loading shall be based on the maximum summation of all forces applied to the roller including, but not limited to, the forces exerted by the belt tension, drive torque and roller mass. Certified calculations shall be submitted as a part of the shop drawing submittal verifying compliance. The gravity belt thickener manufacturer shall provide a listing of all additional loads exerted on each roll created by drive torque.

2. All rolls shall be statically balanced and machined to ensure total concentricity. Rolls shall be machined on a lathe in 3 separate processes. First the O.D. shall be turned to establish a concentricity of less than 0.02". Based on the concentricity of the O.D., the I.D. shall be turned on a lathe across all end plate contact areas to allow for the journals to be heat shrunk. Journals shall be machined to 0.01" concentricity. Once the journal has been seated this process will produce a roller journal assembly with a concentricity of 0.02".

3. All carbon steel rollers shall be covered to the point of insertion into the bearing housing. Tracking and drive roller bodies shall be a minimum 1/4" Buna N rubber covered to a hardness of 79 shore A. All other rollers shall be surfaced with Rilsan (nylon).

M. BEARINGS

1. The shafts of all rollers shall be supported by greaseable type, self aligning, spherical roller bearings housed in a sealed, splash proof, horizontal split case, cast closed pillow block housing. The housing shall be two or four bolt base and two or four bolt cap. The bearing shall be attached to a turned journal shaft by means of an interference fit.

2. All bearings shall have a minimum L-10 life of **1,600,000** hours, at a minimum belt speed of 80 feet per minute, calculated by using the ANSI/AFBMA STD 11-1978 with a 1.15 capacity modification factor per ISO recommendations. The L-10 life shall be based on the summation of all forces applied to the bearings including, but not limited to, roller mass forces and drive torque induced belt tension in addition to the 40 PLI tension set by the tensioning rollers.

3. Certified calculations, based on AFBMA ISO capacity formula shall show that all bearings comply with the specified requirements for a minimum L-10 life at the maximum loadings. Bearing housings shall be Class 25 cast iron and shall conform to ASTM A48 standards. Except for where it is necessary for the shaft to extend through the housing, the outer side of the housing shall be solid without end caps or filler plugs. The seals shall be a triple lip design and rotate with the shaft. The housings shall be clean iron phosphate and coated with a heat treated thermal plastic nylon to a thickness of 8-12 mls. All hardware shall be type 316L stainless steel unless specified otherwise. Lubrication of the bearing shall not be required more than once every six calendar months with the manufacturers recommended lubricant.

N. ELECTRICAL COMPONENTS

1. The gravity belt thickener is supplied with the following NEMA 4X rated components: terminal box, emergency stop trip cords (one each side), belt tracking limit switch (one each side).

2. All components are wired complete to the terminal box including power leads for main belt drive. Wire runs are in PVC coated conduit, non metallic liquid tight flex and connectors, rigidly mounted to the gravity belt thickener frame.

D4L Budget Proposal With Prethickening

Betasso WTP, Boulder, CO.

Budget Proposal No: 1370490

Date: 11-17-2013

By : Bruce SoRelle

Tel : (817) 419-1730

Email: bruce.sorelle@andritz.com

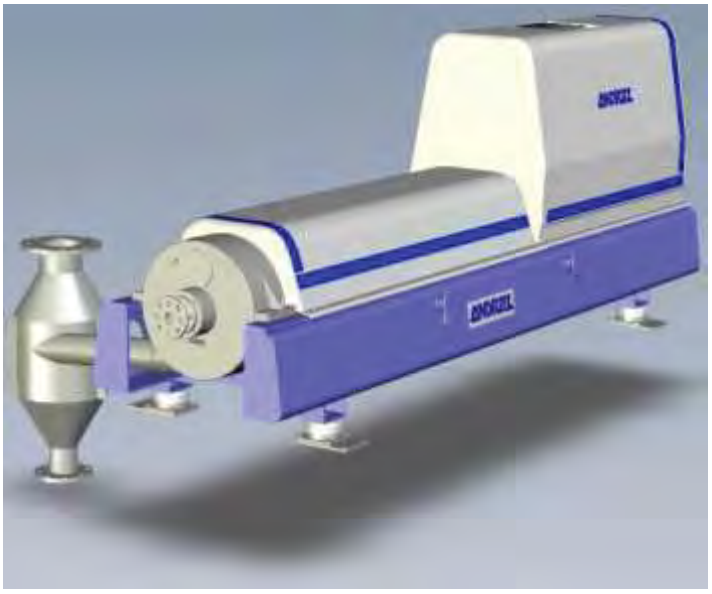

John Bratby PHD., PE
Vice President-Senior
Process Engineer
Brown and Caldwell
1697 Cole Blvd. Ste 200
Golden ,CO 80407
PH: 303-239-5452
Cell: 720-320-3744
Email: jbratby@brwncald.com

ANDRITZ SEPARATION INC.
1010 Commercial Blvd S.
Arlington, Texas 76001, USA
Phone: +1 800 433 5161
Fax: +1 817 468 3961
separation.us@andritz.com
www.andritz

Confidential document. All rights reserved. No duplication or disclosure to third parties permitted without the written consent of ANDRITZ SEPARATION INC.

TABLE OF CONTENTS

Cover Letter 3

1.0 OPERATING CONDITIONS & SIZING & PERFORMANCE 5
1.1 ANTICIPATED OPERATOR CONDITIONS 5
1.2 ANTICIPATED SIZING & PERFORMANCE ..... Error! Bookmark not defined.
2.0 TECHNICAL DATA 6
3.0 CENTRIFUGE FEATURES & BENEFITS 8
3.1 DECANTER CENTRIFUGE GENERAL CHARACTERISTICS 8
3.2 OPERATING PRINCIPLE 8
3.3 HIGH PERFORMANCE SCROLL 8
3.4 WEAR AND ABRASION PROTECTION 9
3.5 ENERGY RECOVERY SYSTEM 10
3.6 CYCLO-SUMITOMO GEAR BOX 13
3.7 INSTALLATION OF THE DECANTER 13
4.0 DOCUMENTATION & COMMISSIONING 14
4.1 TECHNICAL DOCUMENTATION 14
4.2 COMMISSIONING 14
5.0 BUDGETARY OFFER 15
5.1 PRICING SUMMARY 15
5.2 EXCLUDED FROM ANDRITZ SCOPE OF SUPPLY 17
6.0 COMMERCIAL SUMMARY 18
6.1 GENERAL COMMERCIAL TERMS 18
7.0 STANDARD TERMS AND CONDITIONS OF SALE 19

ANDRITZ SEPARATION INC.
1010 Commercial Blvd. S.
Arlington, Texas 76001
Tel. (817) 465-5611
Fax (817) 468-3961
separation.us@andritz.com

November 17, 2013

Brown and Caldwell
1697 Cole Blvd. Ste 200
Golden ,CO 80407

Subject: Betasso

Dear Mr. Brandby

We are pleased to submit our information offering the ANDRITZ high solids decanter centrifuge technology for your sludge dewatering project. This budget proposal assumes that by mechanical

Please find enclosed our budgetary pricing, technical specifications and drawings as well as general information on the ANDRITZ D4L high performance decanter centrifuge.

For your information, the ANDRITZ **centrifuge** is a product of several coordinated ANDRITZ owned manufacturing facilities. **The ANDRITZ proposal will be the only proposal you receive with 100% ANDRITZ (primary vendor) content**. We design, manufacture and assemble our centrifuges, components and controls. We accept full responsibility for our equipment and offer a control system with user-friendly manipulation that we feel is second to none.

Features like

- Special HP scroll for the **highest cake dryness**
- Open flights for the **best centrate** quality,
- **Bowl of 316L** stainless steel construction,
- Field replaceable full length **tungsten carbide conveyor tiles - with up to a 20,000 hour wear warranty**,
- Field replaceable **tungsten carbide protected feed and discharge ports**,
- Field replaceable **tungsten carbide tiles protected discharge casings**,
- **Independent balancing** of bowl, gearbox and scroll
- **Lowest specific electric energy consumption** due to patented energy feedback (up to **20% energy savings on high torque applications**),
- **Simple operation** due to fully automatic torque-controlled regulation,
- **VFD bowl and scroll conveyor** which improves process results and increases life cycle and allows managers to reduce power costs during different season as sludges change,
- **Minimum space and maintenance requirement** due to in-line design,
- **Scroll exchange program** to eliminate spare parts inventory,

ANDRITZ SEPARATION INC.
1010 Commercial Blvd. S.
Arlington, Texas 76001
Tel. (817) 465-5611
Fax (817) 468-3961
separation.us@andritz.com

- **More than 10,000 ANDRITZ centrifuges** are installed around the world and have placed ANDRITZ at the forefront of centrifuge technology.
- **Seven (7)** dedicated service centers within North America.

The information is being furnished based on the ANDRITZ standard scope of supply and design. Should you have any further questions or concerns regarding this quotation please contact our sales representative Roger Perrin @ (425) 822-3335 or feel free to call me at (817) 419-1730.

Once again, we thank you for your time and look forward to hearing from you soon.

Sincerely,
ANDRITZ Separation Inc.

Bruce SoRelle,
Western Regional Sales Manager

Cc: File
APSCO

ANDRITZ SEPARATION INC.
1010 Commercial Blvd. S.
Arlington, Texas 76001
Tel. (817) 465-5611
Fax (817) 468-3961
separation.us@andritz.com

DECANTER CENTRIFUGE TYPE D4L BUDGETARY PROPOSAL

1.0 OPERATING CONDITIONS & SIZING & PERFORMANCE

1.1 ANTICIPATED OPERATOR CONDITIONS

Application	Water Treatment Sedimentation Tank
Operating Cycle(,hrs/day)	7 hours/5 days
Type of sludge (Municipal)	Alum /PAC
Blend	TBD
Feed solids concentration (%TS)	2-3
Hydraulic Loading (GPM)	45-68
Solids Loading Design (lbs/hr TS)	680
Volatile Solids % VS	44
Range of pH	6.1
Capillary Suction Time (seconds)	78
Feed solids SVI (ml/g)	120

1.2 ANTICIPATED SIZING & PERFORMANCE

Decanter type	**D4L**
Number of machines	1
Unit flow (GPM)	45-68
Polymer consumption (active lbs/ton TS)	11-12+/-2
Dryness (%TS)	20
Capture rate (%TSS)	95

- ***Note: If the sludge exists, laboratory and pilot testing are highly recommended to confirm process capabilities. This does not represent a guarantee!***

2.0 TECHNICAL DATA

CHARACTERISTICS	
Size (L x W x H)	133 x 43 x 60 inch (3,390 x 1,100 x 1,496 mm) (without de-aerator) (Anchor bolts not supplied)
Weight with driving system	6,614 pounds (3000Kg)
DE-AERATOR (CENTRATE CHUTE)	
Effluent inlet	Flexible connection supplied (int. diam. 125)
Effluent outlet	ANSI 6 inch
Air outlet	ANSI 8 inch
DRIVE	
Bowl speed (rpm)	3,600
Main motor (hp)	40
Secondary Motor (hp)	10
Cyclo reducer (gearbox), nominal torque	44,000 inch pounds (5,000 N.m)
FREQUENCY INVERTERS	
Brand:	Allen Bradley Power Flex Series 755 (6 Pulse)
Communication:	Ethernet
CONTROLS	
PLC:	Allen Bradley CompactLogix PLC Processor with Ethernet
Touchscreen:	Allen Bradley Panel View Plus
SCROLL SPEED ADJUSTMENT	
Range:	0 - 15 rpm (Redex)
Torque control (dewatering):	based on conveying torque
MATERIAL OF CONSTRUCTION	
Wetted parts:	316L Stainless Steel
Frame	Painted Steel
Cover & De-aerator	Fiberglass
BOWL	
Inner diameter	16.9” (430 mm)
L/D ratio	3.7
Total length	62.6” (1,591 mm)
Speed	3,600 rpm
G Force	3,115
SCROLL	
Counter current design High Performance	
For dismantling purposes:	
Total length of scroll with handling hoist and bowl plate	84” (2,120 mm)
Weight of scroll with handling hoist and bowl plate	595 pounds (270 Kg)

POND DEPTH ADJUSTMENT

Sliding weir plates, range of diameter	7.9” x 12.2” (200 to 310 mm)

WEAR PROTECTION

Inner bowl surface	Integral cylinder and cone grooving
Scroll	Replaceable tungsten carbide tiles the entire length of scroll
Scroll feed chamber (distributor)	Sintered tungsten carbide
Bowl discharge (diffuser)	Sintered tungsten carbide

SEALS

Type	BUNA N
Maximum temperature	176°F (80°C)

LUBRICATION

All bearing blocks are lubricated with grease

The reducer is lubricated exclusively with the type of grease specified by ANDRITZ

NOISE LEVEL

80 dB(A) sound pressure measured in free field conditions, at nominal speed from a distance of 39 inches (1 meter) while empty.

VIBRATION LEVEL 0.18 inch/s (4.5 mm/s) max.

(Registered on test bench at nominal speed according ISO 10816-1)

MISCELLANEOUS

Wash water flow rate	35 to 70 GPM (8 to 16 m^3/hr) for up to 45 min. at each stop (Non-potable water supply / 40 to 60 psi (3 to 4 bars))
Air evacuation	117 cfm (3.3 m^3/min)

3.0 CENTRIFUGE FEATURES & BENEFITS

3.1 DECANTER CENTRIFUGE GENERAL CHARACTERISTICS

The ANDRITZ decanter centrifuge is composed of a rotating assembly, driven by electrical motors, supported by two pillow blocks on a base frame. The rotating assembly includes a cylindrical and conical bowl, a scroll conveyor and a gear box, which creates the differential speed between the scroll conveyor and the bowl.

3.2 OPERATING PRINCIPLE

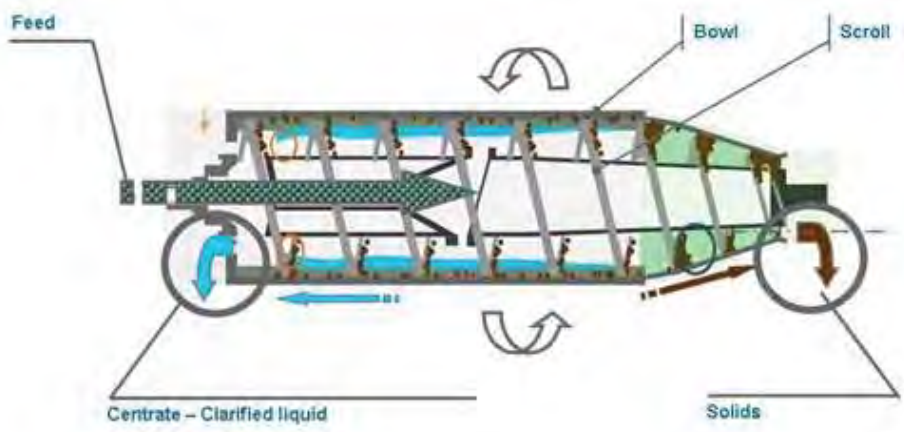

The ANDRITZ decanter is designed for a continuous attention-free operation, through a specific electronic system. The shutdown of the decanter can be programmed outside of the operators' working hours on site and operating 24 hrs. a day is, of course, possible.

3.3 HIGH PERFORMANCE SCROLL

The ANDRITZ High Performance scroll has been designed to increase solids residence time in the process area (to reach lower moisture content) while optimizing the clarified liquid flow, reducing hydraulic turbulences which hinder fines and suspended solids capture.

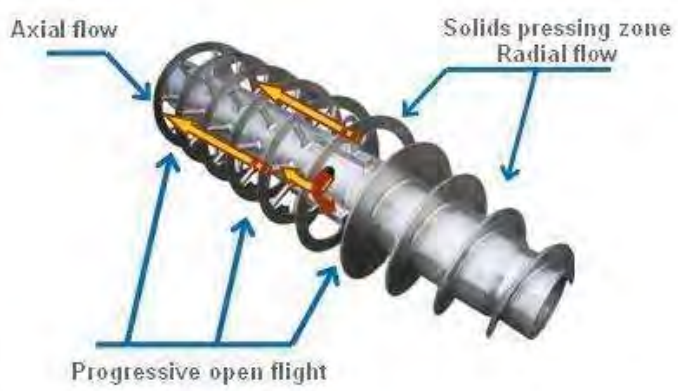

Thanks to the open flight design, the clarified liquid travels axially towards the discharge area over the whole scroll section, instead of being led by a full flight around the scroll hub and in a direction opposite to the scroll displacement.

The low velocities and the laminar characteristics of the flow, drastically reduce the turbulences inside the bowl thus enhancing fine solids capture rate.

3.4 WEAR AND ABRASION PROTECTION

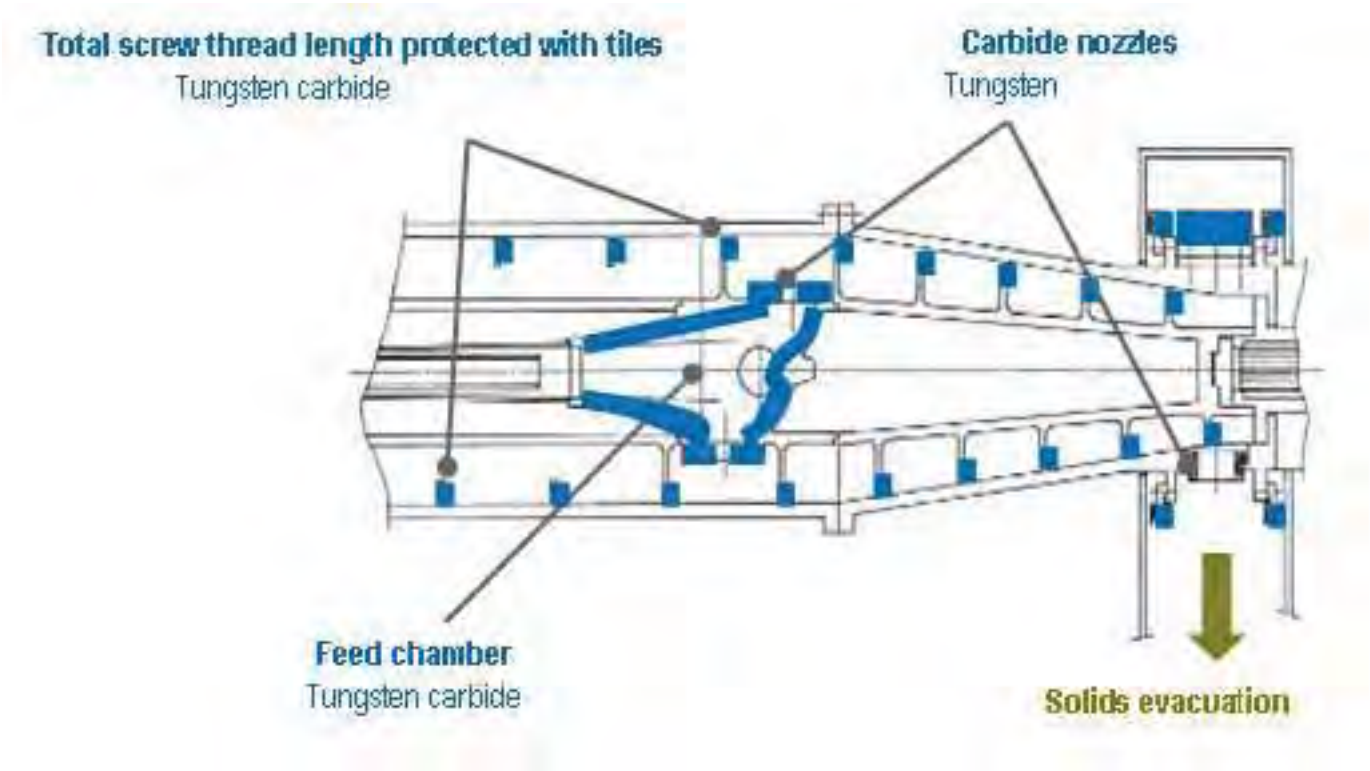

All the rotating assembly parts facing possible abrasion are protected by the most resistant coatings (tungsten carbide, ceramic…)

Field replaceable tungsten carbide tiles the entire length of scroll

Field replaceable tungsten carbide feed ports

Field replaceable tungsten carbide cake discharge ports

3.5 ENERGY RECOVERY SYSTEM

Featured on our High Performance decanter centrifuges, the rotating assembly is driven by a main and a secondary motor. Each motor is controlled by a variable frequency inverter (VFD).

In our protected design, the energy the scroll needs to convey solids is recycled by the inverters. This energy is then fed into the main motor.

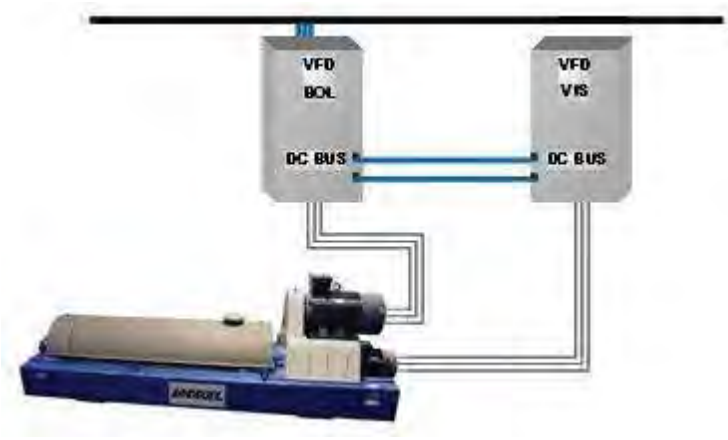

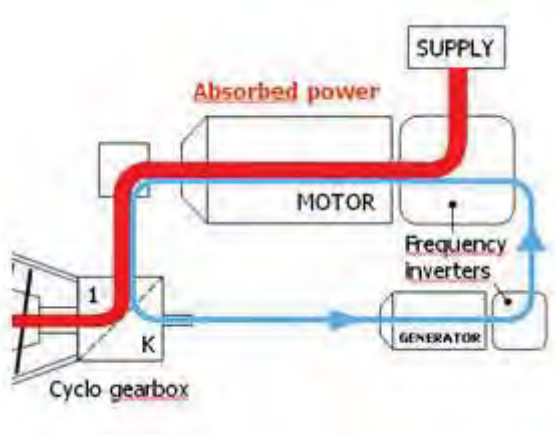

This unique system reduces power consumption up to 25% compared to standard systems.

Scroll speed and bowl speed are independent from each other. Consequently it is possible to adjust separately the G-Force (acceleration) and the solids residence time based on a change of the feed slurry characteristics.

Operator-Friendly Controls

The ANDRITZ centrifuge is designed for continuous, attention-free operation. The advanced centrifuge control system allows full monitoring and adjustments of the system. The start-up and shutdown of the centrifuge can be programmed to occur outside of the operators' working hours and can also allow for 24/7 operation if required.

ANDRITZ supplies a complete control system with touch-screen interface which is capable of controlling the complete dewatering system including centrifuge, polymer system, sludge feed pump, wash water flow and discharge conveyor. The control system allows for totally automatic operation with operational features including Early Start, Extended Run, Pause & Resume and One Touch. All ANDRITZ centrifuge panels include a modem to assist the customer with remote monitoring, troubleshooting, and software upgrades.

The centrifuge control systems are designed, programmed and assembled in-house in Arlington, Texas, and are not outsourced to third party vendors.

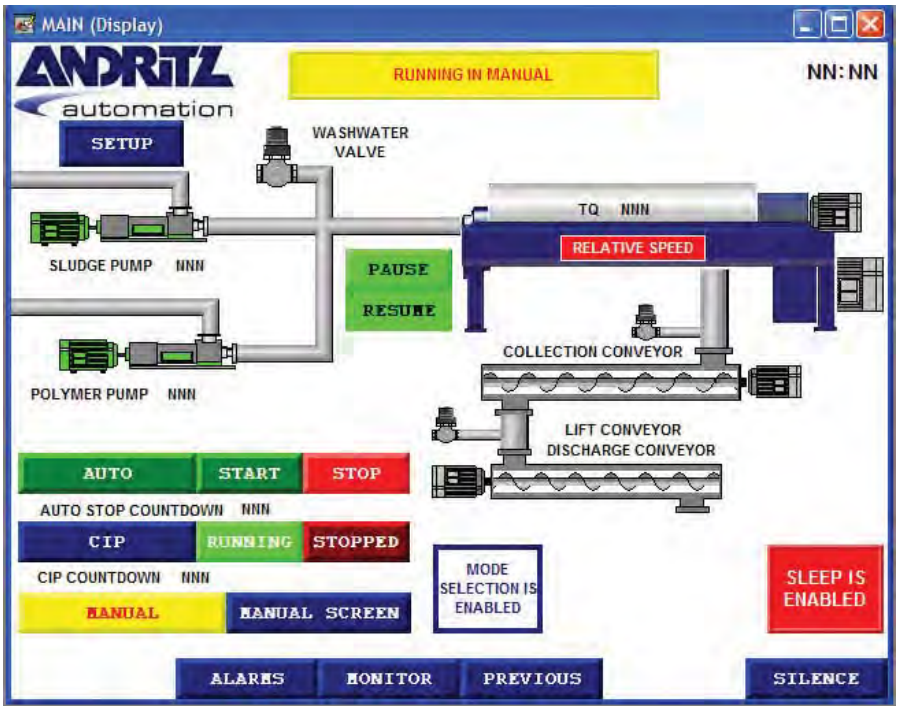
MAIN (Display)
ANDRITZ automation
RUNNING IN MANUAL
NN:NN
SETUP
WASHWATER VALVE
TQ NNN
RELATIVE SPEED
SLUDGE PUMP NNN
PAUSE
RESUME
COLLECTION CONVEYOR
POLYMER PUMP NNN
LIFT CONVEYOR
DISCHARGE CONVEYOR
AUTO
START
STOP
AUTO STOP COUNTDOWN NNN
CIP
RUNNING
STOPPED
CIP COUNTDOWN NNN
MODE SELECTION IS ENABLED
SLEEP IS ENABLED
MANUAL
MANUAL SCREEN
ALARMS
MONITOR
PREVIOUS
SILENCE

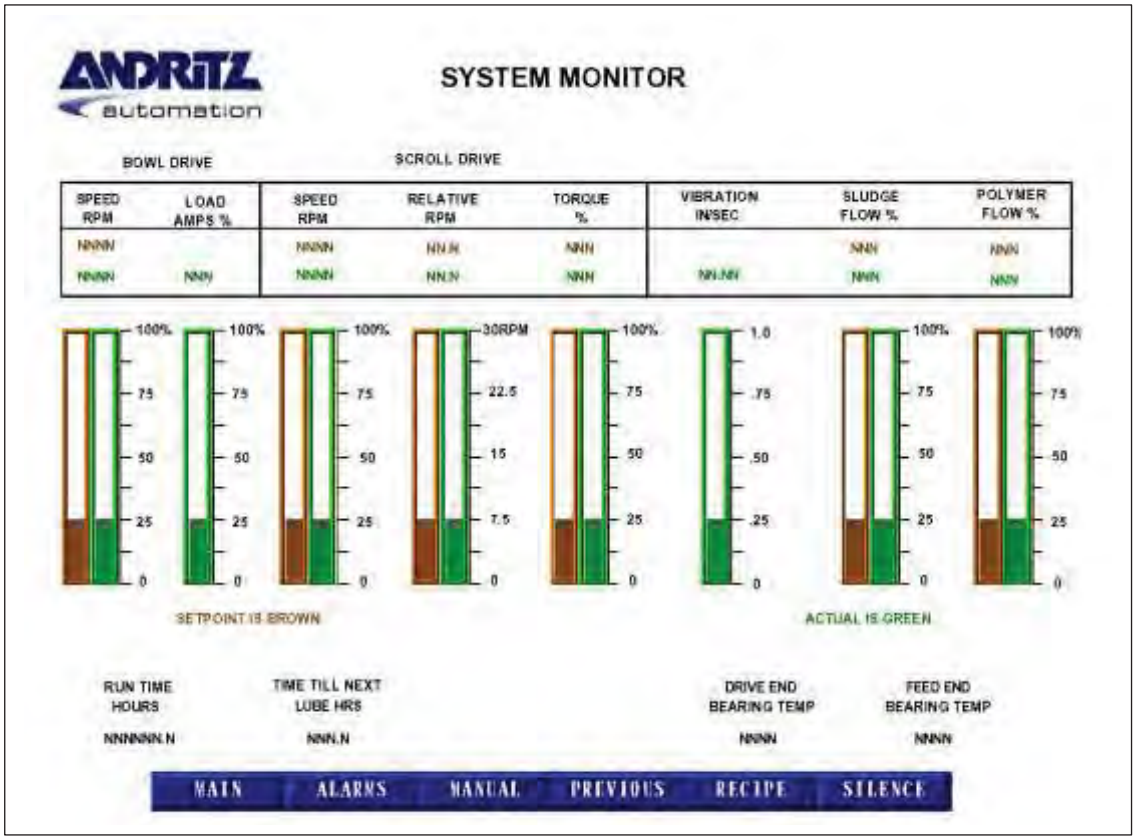
ANDRITZ automation
SYSTEM MONITOR
BOWL DRIVE
SCROLL DRIVE
SPEED RPM
LOAD AMPS %
SPEED RPM
RELATIVE RPM
TORQUE %
VIBRATION IN/SEC
SLUDGE FLOW %
POLYMER FLOW %
NNNN
NNNN
NNN
NNNN
NNNN
NN.N
NNN
NNNN
NNN
NN.NN
NNN
NNN
100%
75
50
25
0
30RPM
22.5
15
7.5
1.0
.75
.50
.25
SETPOINT IS BROWN
ACTUAL IS GREEN
RUN TIME HOURS
NNNNNN.N
TIME TILL NEXT LUBE HRS
NNN.N
DRIVE END BEARING TEMP
NNNN
FEED END BEARING TEMP
NNNN
MAIN
ALARMS
MANUAL
PREVIOUS
RECIPE
SILENCE

3.6 CYCLO-SUMITOMO GEAR BOX

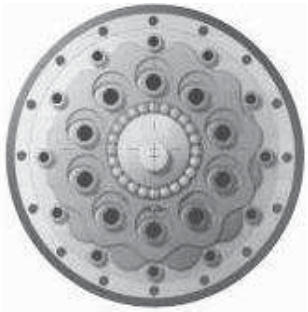

This reducer creates the differential speed between the bowl and the scroll conveyor and bears the torque required to convey the solids out.

CYCLO®-Sumitomo™ reducers are compact and the internal parts do not include planetary satellites. This gearless proprietary design minimize frictions and provides for best efficiencies and torque capacities (able to support up to 500% of its nominal capacity).

The pond depth adjustment inside the bowl is carried out easily without dismantling the machine.

The design of the ANDRITZ decanter is in accordance with European norms and insures perfect safety to the user (full cover).

3.7 INSTALLATION OF THE DECANTER

The IN-LINE design of our ANDRITZ decanter centrifuges reduces the floor-space requirements to a minimum. Its isostatic design decreases vibrations and noise level.

The decanter resting on vibrations shock isolators (included in our scope) is typically installed on concrete supports.

The feed must be regular and homogenous by an adjustable flow rate positive displacement volumetric pump. An industrial water entry for decanter washing must be available (very low wash water consumption and only during the equipment shutdown).

The open solids discharge casing facilitates the installation of any evacuation system. We recommend the

installation of an inclined shaftless screw conveyor with a bottom drain hole for the gravity discharge of the slops at the beginning and the end of each operating cycle.

The de-aerator captures and separates the air dragged with the centrate discharge and allow for its easy evacuation to the outside or any air treatment facility. We recommend the installation of sampling ports for the dewatered solids and centrate.

The power and control panel, in which the frequency inverters (VFD) will be mounted, should be installed in an electrical room with fresh air ventilation, without any contact with the dewatering room, in order to prevent electrical wires and electronic cards corrosion. A local control panel can be installed on a wall near by the decanter if required.

Dismantling and maintenance of the equipment is easy, through the use of a simple monorail, not included in our scope.

4.0 DOCUMENTATION & COMMISSIONING

4.1 TECHNICAL DOCUMENTATION

The Operation and Maintenance Manuals are sent upon delivery of the equipment.
They include among others:
- Instructions regarding installation, automation, commissioning, piloting and maintenance of the equipment
- Part manuals: including drawings with detailed parts number and location for easy service.

4.2 COMMISSIONING

The installation will be carried out and controlled by the customer before arrival of our start-up technician, in accordance with our instructions. Upon his arrival, power, water, and product to be treated and chemical aid products must be available on-site.

As soon as the machine is ready and the sludge available, our technician will come to carry out performance tests and to optimize the operation of the machine. During this commissioning, the personnel on site will be trained to the piloting of the decanter.

A written report will be made before the departure of our technician. In the exceptional case where the commissioning would not be completed, our technician will mention the actions to be carried out to ensure its later completion.

The estimated duration of the commissioning is indicated in the price list. Should we be required to extend our stay on-site because of delays for which we are not responsible, we reserve the right to invoice occurred costs and future costs should other trips be required to complete the commissioning.

5.0 BUDGETARY OFFER

5.1 PRICING SUMMARY

Item	Qty.	Description	Unit Price (Taxes Not included) USD	Total Price (Taxes not included) USD
1	1 ea.	**ANDRITZ D4L Decanter Centrifuge, including**: • 316L stainless steel solid bowl with machined internal grooves • 316L stainless steel HP Scroll conveyor • 316L Stainless steel wetted parts • Field replaceable tungsten carbide tiles over the entire length of scroll • Field-replaceable tungsten carbide feed ports • Field-replaceable tungsten carbide discharge ports • Fiberglass (FRP) noise hood and drive guard • Power regeneration drive system • In-line drives providing space saving advantages • Easy scroll removal without removing bowl or drives • In-line one-stage cyclo speed inducer • Bearings are L-10 for over 100,000 hours • Vibration Isolators • Flexible connectors for sludge feed, centrate discharge and solids discharge	$ 260,000.00	$ 260,000.00
2	1 ea.	**Centrifuge Control Panel (CCP)** • NEMA 4X, 304 stainless steel enclosure, UL508A/CSA listed • Allen Bradley PanelView Plus OIT touch screen • Allen Bradley CompactLogix PLC Processor w/Ethernet • Allen Bradley Power Flex Series 755 (6 Pulse) Variable Frequency Drive • DC Buss fuses for VFD's • Main power disconnect switch • Control voltage transformer • Automatic torque control operation • Automatic clean-in-place	Included	Included

Item	Qty.	Description	Unit Price (Taxes Not included) USD	Total Price (Taxes not included) USD
3	1 lot	**Standard Tools Included with Equipment Supply** • At a minimum one (1) set of the following listed tools shall be included with the centrifuge equipment. • One set ball bearing extractor • One set needle bearing puller • One conveyor lifter • One T-handle screw • One socket wrench for lube nipple • Threaded rods sized for machine • Manual grease pumps • Lubricator extension • Lubricator CY419 and CY430 • Lubricator extension with clamp	Included	Included
4	1 lot	**Supplied Spare Parts** • One (1) set of main bearings. • One (1) set of seals and O-rings.	Included	Included
5	1 lot	**Engineering and Documentation** ANDRITZ will supply the following documents (one e-copy and 3 hard copies): • Arrangement drawings with dimensions for the ANDRITZ scope • Motor list • Written sequence of operation including all interlocks • Control panel layout • Electrical drawings • Mechanical drawings • Terminal box details • Installation, operating and maintenance manuals • Factory load tested	Included	Included
6	1 lot	**Freight to jobsite**	Included	Included
7	1 trip	**Site Supervision and Training** • One trip for 5 days on site for installation checkout, start-up assistance and operator	Included	Included

Item	Qty.	Description	Unit Price (Taxes Not included) USD	Total Price (Taxes not included) USD
		training		
TOTAL PRICE FOR One (1) D4L Centrifuge			$ 260,000.00	$ 260,000.00

5.2 EXCLUDED FROM ANDRITZ SCOPE OF SUPPLY

The ANDRITZ scope of supply does not include the following items as may be necessary for equipment installation & operation to the performance levels specified:

- Civil and structural engineering work.
- Building and building plans (ANDRITZ will furnish load data and layout drawings but is not responsible for updating of building or building plans)
- Building modifications
- Platforms and access stairs or ladders
- All utilities required for operation and erection
- Unloading at site (by others)
- Cranes or other lifting devices to install equipment
- Other instruments not specified in our scope of supply / outside of panel
- Polymer feed system
- Flow Meters
- Sludge Grinder
- Wash water booster pump
- Cake Discharge Pumps
- Centrate Discharge Pump
- Polymer
- Lubricants

6.0 COMMERCIAL SUMMARY

6.1 GENERAL COMMERCIAL TERMS

Terms and Conditions

This proposal is based on the attached ANDRITZ Separation "Standard Terms and Conditions of Sale".

Special Provisions

- All prices quoted in US Dollars,
- Pricing quoted is FOB Jobsite, and does not include unloading.
- Pricing does not include any local, state or federal taxes, permits, duties or other fees. Any taxes or fees that may apply must be added to the quoted price and paid by the buyer. Bonding is not included.

Validity

Budget quotation is valid for a period of ninety (90) days.

Terms of Payment

ANDRITZ Separation agrees to the following payment terms (on a net 30 day basis):

- 30% of Order Value upon submittal of Approval Drawings
- 60% of Order Value upon Shipment
- 10% of Order Value upon Startup, not to exceed 120 days from Shipment

Delivery

Approval Drawings will be submitted 6 - 8 weeks after written acceptance of Order.
Equipment delivery will be 20-24 weeks from receipt of written Approved Submittals.

Field Service

This Installation checkout, startup and training services by a qualified ANDRITZ Service Technician have been included in this proposal for one trip with up to 5 days on site.

ANDRITZ will provide additional erection and start-up supervision for $1,500.00 per day plus expenses, eight (8) hours/day. At the request of the Purchaser, overtime service will be provided at a rate of 1.5 times quoted rates for weekdays and 2.0 times quoted rates for weekends. Expenses are defined as the cost of travel from Seller's plant to the point of installation and return, together will all living expenses during the period of service.

The above charges shall be made for time involved including delays which are beyond the Seller's control.

7.0 STANDARD TERMS AND CONDITIONS OF SALE

1. TERMS APPLICABLE

The Terms and Conditions of Sale listed below are the exclusive terms and conditions applicable to quotations made and orders acknowledged by the ANDRITZ entity supplying the same ("Seller") for the sales of products, equipment and parts relating thereto ("Products"). If this quotation or acknowledgment contains terms additional to or different from those offered by Buyer, then any acceptance by Seller is expressly made conditional upon Buyer's assent to such additional or different terms. Any of Buyer's terms and conditions that are in addition to or different from those contained herein, which are not separately agreed to by Seller in writing, are hereby objected to and shall be of no effect. [The term "this Agreement" as used herein means this quotation or acknowledgment or purchase order, together with any attachment hereto, any documents expressly incorporated by reference and these Terms and Conditions of Sale.

2. DELIVERY

Delivery dates are good faith estimates and do not mean that "time is of the essence." Buyer's failure to promptly make advance or interim payments, supply technical information, drawings and approvals will result in a commensurate delay in delivery. Upon and after delivery, risk of loss or damage to the Products shall be Buyer's. Delivery of the Products hereunder will be made on the terms agreed to by the parties as set forth in this Agreement, according to INCOTERMS 2010.

3. WARRANTY

(a) Seller warrants to Buyer that the Products manufactured by it will be delivered free from defects in material and workmanship. This warranty shall commence upon delivery of the Products and shall expire on the earlier to occur of 12 months from initial operation of the Products and 18 months from delivery thereof (the "Warranty Period"). If during the Warranty Period Buyer discovers a defect in material or workmanship of a Product and gives Seller written notice thereof within 10 days of such discovery, Seller will, at its option, either deliver to Buyer, on the same terms as the original delivery was made, according to INCOTERMS 2010, a replacement part or repair the defect in place. Any repair or replacement part furnish pursuant to this warranty are warranted against defects in material and workmanship for one period of 12 months from completion of such repair or replacement, with no further extension. Seller will have no warranty obligations for the Products under this paragraph 3(a): (i) if the Products have not been operated and maintained in accordance with generally approved industry practice and with Seller's specific written instructions; (ii) if the Products are used in connection with any mixture or substance or operating condition other than that for which they were designed; (iii) if Buyer fails to give Seller such written 10 day notice; (iv) if the Products are repaired by someone other than Seller or have been intentionally or accidentally damaged; (v) for corrosion, erosion, ordinary wear and tear or in respect of any parts which by their nature are exposed to severe wear and tear or are considered expendable; or (vi) for expenses incurred for work in connection with the removal of the defective articles and reinstallation following repair or replacement.

(b) Seller further warrants to Buyer that at delivery, the Products manufactured by it will be free of any liens or encumbrances. If there are any such liens or encumbrances, Seller will cause them to be discharged promptly after notification from Buyer of their existence.

(c) THE EXPRESS WARRANTIES SELLER MAKES IN THIS PARAGRAPH 3 ARE THE ONLY WARRANTIES IT WILL MAKE. THERE ARE NO OTHER WARRANTIES, WHETHER STATUTORY, ORAL, EXPRESS OR IMPLIED. IN PARTICULAR, THERE ARE NO IMPLIED WARRANTIES OF MERCHANTABILITY OR FITNESS FOR A PARTICULAR PURPOSE.

(d) The remedies provided in paragraphs 3(a) and 3(b) are Buyer's exclusive remedy for breach of warranty.

(e) With respect to any Product or part thereof not manufactured by Seller, Seller shall pass on to Buyer only those warranties made to Seller by the manufacturer of such Product or part which are capable of being so passed on.

4. LIMITATION OF LIABILITY

Notwithstanding any other provision in this Agreement, the following limitations of liability shall apply:

(a) In no event, whether based on contract, tort (including negligence), strict liability or otherwise, shall Seller, its officers, directors, employees, subcontractors, suppliers or affiliated companies be liable to Buyer or any third party for loss of profits, revenue or business opportunity, loss by reason of shutdown of facilities or inability to operate any facility at full capacity, or cost of obtaining other means for performing the functions performed by the Products, loss of future contracts, claims of customers, cost of money or loss of use of capital, in each case whether or not foreseeable, or for any indirect, special, incidental or consequential damages of any nature.

(b) The aggregate liability of Seller, its officers, directors, employees, subcontractors, suppliers or affiliated companies, for all claims of any kind for any loss, damage, or expense resulting from, arising out of or connected with the Products or this Agreement or from the performance or breach thereof, together with the cost of performing make good obligations to pass performance tests, if applicable, shall in no event exceed the contract price. The foregoing notwithstanding, Seller's aggregate liability for any claims for (a) delay in delivery shall not exceed 5% and (b) failure to achieve performance requirements, shall not exceed 15% of the contract price.

(c) The limitations and exclusions of liability set forth in this paragraph 4 shall take precedence over any other provision of this Agreement and shall apply whether the claim of liability is based on contract, warranty, tort (including negligence), strict liability, indemnity, or otherwise. The remedies provided in this Agreement are Buyer's exclusive remedies.

(d) All liability of Seller, its officers, directors, employees, subcontractors, suppliers or affiliated companies, resulting from, arising out of or connected with the Products or this Agreement or from the performance or breach thereof shall terminate on the third anniversary of the date of this Agreement.

5. CHANGES, DELETIONS AND EXTRA WORK

Seller will not make changes in the Products unless Buyer and Seller have executed a written Change Order for such change. Any such Change Order will include an appropriate adjustment to the contract price and delivery terms. If the change impairs Seller's ability to satisfy any of its obligations to Buyer, the Change Order will include appropriate modifications to this Agreement. If, after the date of this quotation or acknowledgment, new or revised governmental requirements should require a change in the Products, the change will be subject to this paragraph 5.

6. TAXES

Seller's prices do not include any sales, use, excise or other taxes. In addition to the price specified herein, the amount of any present or future sales, use, excise or other tax applicable to the sale or use of the Products shall be billed to and paid by Buyer unless Buyer provides to Seller a tax-exemption certificate acceptable to the relevant taxing authorities.

7. SECURITY INTEREST

Seller shall retain a purchase money security interest and Buyer hereby grants Seller a lien upon and security interest in the Products until all payments hereunder have been made in full. Buyer acknowledges that Seller may file a financing statement or comparable document as required by applicable law and may take all other action it deems reasonably necessary to perfect and maintain such security interest in Seller and to protect Seller's interest in the Products.

8. SET OFF

Neither Buyer nor any of its affiliates shall have any right to set off claims against Seller or any of its affiliates for amounts owed under this Agreement or otherwise.

9. PATENTS

Unless the Products or any part thereof are designed to Buyer's specifications and provided the Product or any part thereof is not used in any manner other than as specified or approved by Seller in writing, (i) Seller shall defend against any suit or proceeding brought against Buyer to the extent based on a claim that any Product, or any part thereof, infringes any United States device patent; provided Seller is notified promptly in writing and given the necessary authority, information and assistance for the defense of such suit or proceeding; (ii) Seller shall satisfy any judgment for damages entered against Buyer in such suit; and (iii) if such judgment enjoins Buyer from using any product or a part thereof, then Seller shall, at its option: (a) obtain for Buyer the right to continue using such Product or part; (b) eliminate the infringement by replacing or modifying all or part of the Products; or (c) take back such Product or part and refund to Buyer all payments on the purchase price which Seller has received, in which case neither Buyer nor Seller will have any claim against the other under this Agreement or arising out of the subject matter of this Agreement. The foregoing states Seller's entire liability for patent infringement by any Product or part thereof.

10. SOFTWARE LICENSE, WARRANTY, FEES

The following Software Terms and Conditions apply to any software furnished by Seller, whether separately packaged or embedded in the Products furnished by Seller hereunder:

(a) Seller hereby grants to Buyer: a non-exclusive, non-transferable license to use any computer software delivered to Buyer under this Agreement in machine-readable, object code form and any modifications made by Seller thereto ("Software"), but only in connection with the configuration of the Products and operating system for which the Software is ordered and for the end-use purpose stated in the related Seller operating documentation. Buyer agrees that neither it nor any third party shall modify, reverse engineer, decompile or reproduce the Software, without Seller's prior written consent, except for making a single copy for backup or archival purposes in accordance with the related Seller operating documentation, and provided that Seller's confidential and proprietary legend is included. Except to the extent that the parties otherwise agree in writing, Buyer's license to use the copy of such Software shall terminate upon breach of this license or Agreement by Buyer, including, without limitation, breach of payment or confidentiality obligations. All copies of the Software are the property of Seller, and all copies for which the license is terminated shall be returned to Seller promptly after termination.

(b) Buyer may not transfer this software license and warranty to a third party without Seller's previous written consent, signed by a Seller authorized representative.

(c) Seller warrants that on the date of shipment of the Software only to Buyer or Buyer's Seller-authorized transferee hereunder that: (1) the Software media contain a true and correct copy of the Software and are free from material defects; (2) Seller has the right to grant the license hereunder; and (3) the Software will function substantially in accordance with the related Seller operating documentation. Seller disclaims any warranty that the operation of the Software will be uninterrupted or error free. This warranty does not apply to software delivered by Seller but produced by others. The warranty for software produced by others shall be the warranty as stated by the software producer.

(d) If within six months (6) months from date of initial installation (but not more than one year from date of shipment by Seller to Buyer) of Software, Buyer discovers that the Software is not as warranted above and promptly notifies Seller in writing, within this period of time, of the nonconformity, and if Seller cannot correct the nonconformity or deems correction to be commercially impracticable or prohibitively expensive, Buyer's and Buyer's Seller-authorized transferee's exclusive remedies, at Seller's option and expense, are: (1) replacement of the nonconforming Software; or (2) termination of this license and a refund of an equitable, pro rata share of the contract price or license fee paid.

(e) If any infringement and trade secret claims are made against Buyer based on the Buyer's use of the Software in a manner specified or approved by Seller, Seller shall: (i) defend against any suit or proceeding brought by an unaffiliated third party against Buyer to the extent the suit or proceeding is based on a claim that the Software or that the specified or approved use of the Software infringes a United States patent, a copyright or violates a trade secret agreement in which Seller was a party and provided that Seller is notified promptly in writing and given the necessary authority, information and assistance for the defense and settlement of such suit or proceeding (including the sole authority to select counsel and remove the Software or stop accused infringing usage); (ii) Seller shall satisfy any settlement or final judgment (after any appeals) for damages entered against Buyer in such suit; and (iii) if such settlement prohibits or judgment enjoins Buyer from using the Software, Seller shall at its option: (a) obtain for Buyer the right to continue using such Software; (b) eliminate the infringement by replacing or modifying the Software, or (c) take back such Software and refund to Buyer all payments on the purchase price which Seller has received, in which case neither Buyer nor Seller will have any claim against the other under this Agreement or arising out of the subject matter of this Agreement. However, Seller's obligations with respect to infringement and trade secret claims will not apply to the extent that the claim or adverse final judgment is based on: (1) Buyer's running of the Software after being notified to discontinue running due to such a claim; (2) the combination of the Software with a non-Seller software, product, data or process; (3) damages attributable to the value of the use of a non-Seller software, product, data, or process; (4) Buyer's alteration of the Software; (5) Buyer's distributed the Software to, or its use for the benefit of, any third party; or (6) Buyer's acquiring a trade secret (a) through improper means; (b) under circumstances giving rise to a duty to maintain its secrecy or limit its use; or (c) from a person (other than Seller) who owed to the party asserting the claim a duty to maintain the secrecy or limit the use of the trade secret. Buyer will reimburse Seller for any costs or damages that result from these actions 1 to 6. If Seller receives information about an infringement claim related to the Software, Seller may do any of the following, at its expense and without obligation to do so: (i) procure the right to continue use of the Software, (ii) replace the Software with a functional equivalent and (iii) modify the Software to make it non-infringing (including disabling the challenged functionality and under circumstances (ii) and (iii) Buyer will stop running the allegedly infringing software immediately).

(f) This warranty will apply for the period specified in (d) above, provided that: (1) the Software is not modified, changed, or altered by anyone other than Seller or its suppliers, unless authorized by Seller in writing; (2) there is no change by anyone other than Seller to the goods for which the Software is ordered; (3) the goods are in good operating order and are installed in a suitable operating environment; (4) the nonconformity is not caused by Buyer or any of their agents, servants, employees, or contractors, or any third party; (5) Buyer promptly notifies Seller in writing, within the period of time set forth in (d) above, of the nonconformity after it is discovered; and (6) all fees for the Software due to Seller have been paid. SELLER HEREBY DISCLAIMS ALL OTHER WARRANTIES, EXPRESS OR IMPLIED, WITH REGARD TO THE SOFTWARE, INCLUDING BUT NOT LIMITED TO IMPLIED WARRANTIES OF MERCHANTABILITY, FITNESS FOR A PARTICULAR PURPOSE, COURSE OF DEALING AND USAGE OF TRADE.

(g) Buyer and successors of Buyer are limited to the remedies specified in this paragraph 10 and shall have no others for a nonconformity in the Software. Buyer agrees that these remedies provide Buyer and its successors with a minimum adequate remedy and are their exclusive remedies, whether Buyer's or successors' remedies are based on contract, warranty, tort (including negligence), strict liability, indemnity, or any other legal theory, and whether arising out of warranties, representations, instructions, operating documentation, installations, or non-conformities from any cause.

(h) Unless otherwise provided in this Agreement, the fees for this Software license are included in the purchase price of the Products. Any subsequent modifications or enhancements to the Software made by Seller are, at Seller's option, subject to a fee.

11. TERMINATION

Buyer may only terminate its order upon written notice to Seller and upon payment to Seller of Seller's termination charges, which shall be specified to Buyer and shall take into account among other things expenses (direct and indirect) incurred and commitments already made by Seller and an appropriate profit; provided, that in no event shall Seller's termination charges be less than 25% of the contract price. Seller shall have the right to suspend and/or terminate its obligations under this Agreement if payment is not received within 30 days of due date. In the event of the bankruptcy or insolvency of Buyer or in the event of any bankruptcy or insolvency proceeding brought by or

against Buyer, Seller shall be entitled to terminate any order outstanding at any time during the period allowed for filing claims against the estate and shall receive reimbursement for its cancellation charges.

12. CONFIDENTIALITY

Buyer acknowledges that the information which Seller submits to Buyer in connection with this quotation, acknowledgment or performance of this Agreement includes Seller's confidential and proprietary information, both of a technical and commercial nature. Buyer agrees not to disclose such information to third parties without Seller's prior written consent. Seller grants to Buyer a non-exclusive, royalty-free, perpetual license to use Seller's confidential and proprietary information for purposes of this Agreement and the Products that are the subject hereof only. Buyer further agrees not to permit any third party to fabricate the Products or any parts thereof from Seller's drawings or to use the drawings other than in connection with this Agreement. Buyer will defend and indemnify Seller from any claim, suit or liability based on personal injury (including death) or property damage related to any Product or part thereof which is fabricated by a third party without Seller's prior written consent and from and against related costs, charges and expenses (including attorneys fees). All copies of Seller's drawings shall remain Seller's property and may be reclaimed by Seller at any time.

13. END USER

If Buyer is not the end user of the Products sold hereunder (the "End User"), then Buyer will use its best efforts to obtain the End User's written consent to be bound to Seller by the provisions hereof. If Buyer does not obtain such End User's consent, Buyer shall defend and indemnify Seller and Seller's agents, employees, subcontractors and suppliers from any action, liability, cost, loss, or expense for which Seller would not have been liable or from which Seller would have been indemnified if Buyer had obtained such End User's consent.

14. FORCE MAJEURE

(a) Force Majeure Defined. For the purpose of this Agreement "Force Majeure" will mean all unforeseeable events, beyond the reasonable control of either party which affect the performance of this Agreement, including, without limitation, acts of God, acts or advisories of governmental or quasi-governmental authorities, laws or regulations, strikes, lockouts or other industrial disturbances, acts of public enemy, wars, insurrections, riots, epidemics, pandemics, outbreaks of infectious disease or other threats to public health, lightning, earthquakes, fires, storms, severe weather, floods, sabotage, delays in transportation, rejection of main forgings and castings, lack of available shipping by land, sea or air, lack of dock lighterage or loading or unloading facilities, inability to obtain labor or materials from usual sources, serious accidents involving the work of suppliers or sub-suppliers, thefts and explosions.

(b) Suspension of Obligations. If either Buyer or Seller is unable to carry out its obligations under this Agreement due to Force Majeure, other than the obligation to make payments due hereunder, and the party affected promptly notifies the other of such delay, then all obligations that are affected by Force Majeure will be suspended or reduced for the period of Force Majeure and for such additional time as is required to resume the performance of its obligations, and the delivery schedule will be adjusted to account for the delay.

(c) Option to Terminate. If the period of suspension or reduction of operations will extend for more than four (4) consecutive months or periods of suspension or reduction total more than six (6) months in any twelve (12) month period, then either Buyer or Seller may terminate this Agreement.

15. INDEMNIFICATION AND INSURANCE

(a) Indemnification. Seller agrees to defend and indemnify Buyer from and against any third-party claim for bodily injury or physical property damage ("Loss") arising in connection with the Products provided by Seller hereunder or the work performed by Seller hereunder, but only to the extent such Loss has been caused by the negligence, willful misconduct or other legal fault ("Fault") of Seller. Buyer shall promptly tender the defense of any such third-party claim to Seller. Seller shall be entitled to control the defense and resolution of such claim, provided that Buyer shall be entitled to be represented in the matter by counsel of its choosing at Buyer's sole expense. Where such Loss results from the Fault of both Seller and Buyer or a third party, then Seller's defense and indemnity obligation shall be limited to the proportion of the Loss that Seller's Fault bears to the total Fault.

(b) Insurance. Seller shall maintain commercial general liability insurance with limits of not less than $2,000,000 per occurrence and in the aggregate covering claims for bodily injury (including death) and physical property damage arising out of the Products. Seller will provide a Certificate of Insurance certifying the existence of such coverages upon request.

16. GENERAL

(a) Seller represents that any Products or parts thereof manufactured by Seller will be produced in compliance with all applicable federal, state and local laws applicable to their manufacture and in accordance with Seller's engineering standards. Seller shall not be liable for failure of the Products to comply with any other specifications, standards, laws or regulations.

(b) This Agreement shall inure only to the benefit of Buyer and Seller and their respective successors and assigns. Any assignment of this Agreement or any of the rights or obligations hereunder, by either party without the written consent of the other party shall be void.

(c) This Agreement contains the entire and only agreement between the parties with respect to the subject matter hereof and supersedes all prior oral and written
understandings between Buyer and Seller concerning the Products and any prior course of dealings or usage of the trade not expressly incorporated herein.

(d) This Agreement may be modified, supplemented or amended only by a writing signed by an authorized representative of Seller. Seller's waiver of any breach by Buyer of any terms of this Agreement must also be in writing and any waiver by Seller or failure by Seller to enforce any of the terms and conditions of this Agreement at any time, shall not affect, limit or waive Seller's right thereafter to enforce and compel strict compliance with every term and condition thereof.

(e) (i) If the Products are delivered or performed in the United States, this Agreement and the performance thereof will be governed by and construed according to the laws of the State of Georgia.

(ii) In the circumstances of (i) above, any controversy or claim arising out of or relating to this Agreement, or the breach thereof, or to the Products provided pursuant hereto, shall be definitively settled by arbitration, to the exclusion of courts of law, administered by the American Arbitration Association ("AAA") in accordance with its Construction Industry Arbitration Rules in force at the time this Agreement is signed and to which the parties declare they will adhere (the "AAA Rules"), and judgment on the award rendered by the arbitrator(s) may be entered in any court having jurisdiction over the party against whom enforcement is sought or having jurisdiction over any of such party's assets. The arbitration shall be conducted in Atlanta, Georgia by a panel of three members, one of whom will be appointed by each of Buyer and Seller and the third of whom will be the chairman of the panel and will be appointed by mutual agreement of the two party-appointed arbitrators. All arbitrators must be persons who are not employees, agents, or former employees or agents of either party. In the event of failure of the two party-appointed arbitrators to agree within forty-five (45) days after submission of the dispute to arbitration upon the appointment of the third arbitrator, the third arbitrator will be appointed by the AAA in accordance with the AAA Rules. In the event that either of Buyer or Seller fails to appoint an arbitrator within thirty (30) days after submission of the dispute to arbitration, such arbitrator, as well as the third arbitrator, will be appointed by the AAA in accordance with the AAA Rules.

(f) (i) If the Products are delivered or performed in Canada, this Agreement and the performance thereof will be governed by and construed according to the laws of the Province of New Brunswick.

(ii) In the circumstances of (i) above, any controversy or claim arising out of or relating to this Agreement, or the breach thereof, or to the Products provided pursuant hereto, shall be definitively settled under the auspices of the Canadian Commercial Arbitration Centre ("CCAC"), by means of arbitration and to the exclusion of courts of law, in accordance with its General Commercial Arbitration Rules in force at the time the Agreement is signed and to which the parties declare they will adhere (the "CCAC Rules"), and judgment on the award rendered by the arbitrator(s) may be entered in any court having jurisdiction over the party against whom enforcement is sought or having jurisdiction over any of such party's assets. The arbitration shall be conducted in Saint John, New Brunswick by a panel of three arbitrators, one of whom will be appointed by each of Buyer and Seller and the third of whom will be the chairman of the arbitral tribunal and will be appointed by mutual agreement of the two party-appointed arbitrators. All arbitrators must be persons who are not employees, agents, or former employees or agents of either party. In the event of failure of the two party-appointed arbitrators to agree within forty-five (45) days after submission of the dispute to arbitration upon the appointment of the third arbitrator, the third arbitrator will be appointed by the CCAC in accordance with the CCAC Rules. In the event that either of Buyer or Seller fails to appoint an arbitrator within thirty (30) days after submission of the dispute to arbitration, such arbitrator, as well as the third arbitrator, will be appointed by the CCAC in accordance with the CCAC Rules.

(g) The parties hereto have required that this Agreement be drawn up in English. Les parties aux présentes ont exigé que la présente convention soit rédigée en anglais.

Jan 2013 Rev.

ANDRITZ
SOLID BOWL DECANTER CENTRIFUGE
STANDARD MACHINE CUT SHEET

GENERAL MACHINE TECHNICAL DATA

Model Number	D4L
Diameter (Inches)	16.92
Maximum Operating Speed (R.P.M.)	3,600
Force (G)	3,115
Overall Length (Inches)	133
Overall Width (Inches)	43
Overall Height (Inches)	59
Dry Weight (Lbs.)	6,614
Total Connected Load (HP)	40
Secondary Drive Motor (HP)	10 (not a connected load)

MAJOR COMPONENTS

Bowl	**Constructed of 316L / duplex stainless steel.**
Bowl Cover	**Outer safety guard / enclosure constructed of reinforced fiberglass.**
Cake Discharge Casing	**Equipped with 316L stainless steel, field replaceable wear surfaces.**
Scroll Conveyor	**Constructed of 316L stainless steel. The full length of flight edges protected against abrasion with field replaceable tungsten carbide tiles.**
Internal Case	**Constructed of 316L stainless steel.**
Base	**Fabricated of carbon steel mounted on vibration isolators.**
Bearings	**All bearings L-10 rated for over 100,000 hours.**
Fasteners	**Fasteners 316L stainless steel.**
Gearbox	**In-line cyclo gear unit.**
Control Panel	**NEMA 4X Centrifuge Control Panel**

PART 1.00 GENERAL

1.01 SUMMARY

The contractor shall furnish and install the centrifuge and associated piping, valves, controls, and wiring as specified and shown on the drawings. The centrifuge system specified in this section shall be provided by a single manufacturer to ensure coordination and compatibility of equipment. The contractor shall be responsible for insuring a complete and operable centrifuge system.

1.02 REFERENCES

The design, manufacture, and installation of this equipment shall meet or exceed the applicable provisions and recommendations of the following codes and standards:

A. AGMA, American Gear Manufacturers Association

B. ASME, American Society of Mechanical Engineers.

C. ASTM, American Society of Testing and Materials.

D. ANSI, American National Standards Institute.

E. IEEE, Institute of Electrical and Electronics Engineers.

F. NEC, National Electrical Code.

G. OSHA, Occupational Safety and Electrical Code

1.03 DEFINITIONS

A. Solids Capture: Solids capture is defined as the percent of the total suspended solids content in the feed sludge that remain in the thickened or dewatered end product on a weight basis.

1. For purposes of this specification, "Capture" is defined as:
   % Capture=(C/F) [(F-E)/(C-E)] x 100%

   Where:
   C = Dewatered Sludge Total Solids (% TS)
   F = Feed (% TSS); excluding any dilution from polymer solution flow
   E = Filtrate (% TSS); excluding any dilution from polymer solution

B. Polymer Consumption: To be based on 100% active polymer.

1.04 SYSTEM DESCRIPTION

A. Performance Requirements: The centrifuge shall operate within the design conditions listed in part B "DESIGN CRITERIA" of this section 1.04 and meet the following performance criteria:

1. Number of centrifuge(s).....To be determined

2. Maximum flow rate (GPM).....To be determined

3. Maximum solids loading (dry lbs/hr).....To be determined

4. Minimum dewater sludge solids (% TS).....To be determined

5. Minimum solids capture (% TSS).....To be determined

6. Maximum polymer dosage (Active lbs/ton).....To be determined

B. Design Criteria: The centrifuge shall be designed to extract water from the sludge specified herein after conditioning of the sludge with a polymer solution. The process of dewatering shall produce a finished sludge product based on the following design requirements:

1. Type of Sludge .....To be determined

2. Solids Concentrations (% TSS).....To be determined

3. Solids Loading (TS/hour).....To be determined

4. Temperature (°F).....To be determined

5. Ash Content (% by weight).....To be determined

6. Operating Cycle (hrs/day/week).....To be determined

7. pH.....To be determined

8. Sludge Volume Index (SVI).....To be determined

9. Particle Size Not to Exceed.....To be determined

1.05 SUBMITTALS

A. Complete assembly, foundation, and installation drawings, together with detailed specifications and data covering materials used, power drive assembly, parts, instrumentation devices and other accessories forming a part of the equipment furnished shall be submitted for review. The following information shall also be submitted with shop drawings.

1. Detailed drawings and descriptions of all items of equipment, including centrifuge control panels, showing all dimensions, parts, construction details, and materials of construction signed and stamped by a professional engineer registered in the United States of America and directly employed by the centrifuge manufacturer.

2. Complete motor rating including all nameplate data; guaranteed minimum rated efficiency, and speed torque curves.

3. Complete electrical system drawings and description including, but not limited to, the following:

   a. Complete system interconnection diagrams between power supply, control panels, drive motor, secondary drive motor, and all ancillary equipment connected to control system, including terminal number connection points.

   b. Control panel overall dimensions and layout of external and internal mounted components.

   c. Complete electrical schematics with power wiring and control wiring in accordance with current standards, schematics shall include all component ratings.

   d. Description of control system in written form including functions monitored, controlled, and alarmed. Include sequence of operation and interface requirements.

   e. Control component itemized information and data.

4. Certified calculations of AFBMA L-10 bearing life.

5. Type of lubrication recommended for all equipment.

6. Information on field and installation requirements, including mounting and access requirements and total weight of each component and each complete assembly.

7. List of spare parts to be furnished.

8. Statement for machine warranties.

B. Four (4) Owners Manuals. Operations and maintenance information and equipment maintenance summary sheets shall be furnished for the equipment specified herein.

1.06 QUALITY ASSURANCE

A. Other than the named suppliers, all bidders proposing equipment described herein, shall provide a detailed pre-qualification submittal package ten days prior to bid opening which shall consist, at a minimum of all information and details prescribed in Section 1.05 of this specification. Pre-approval by addendum is required to be considered as an acceptable qualified bidder.

B. If submitted equipment requires arrangement differing from that indicated on the drawings or specified, prepare and submit for review complete structural, mechanical, and electrical drawings and equipment lists showing all necessary changes and detailing all special features of equipment proposed with pre-qualification package required above. Any changes are at no additional compensation and the bidders shall be responsible for all necessary engineering costs for redesign by the Project Engineer.

C. Only those manufacturer's capable of providing irrefutable evidence of a minimum of five (5) years experience in the manufacture and installation of the exact model proposed and ten (10) North American operating installation references with a minimum of five (5) years operating history of the exact model proposed shall be considered.

1.07 DELIVERY, STORAGE & HANDLING

A. Ship items as complete assemblies except where partial disassembly is required by transportation regulations or for protection of components.

B. Spare parts

1. Pack in containers bearing labels clearly designating contents and pieces of equipment for which the part is intended. Each part shall be identified with a tag bearing its part number and a part description.

2. Delivered at same time as equipment.

C. Unloading and Storage of the Equipment

1. The contractor is responsible for the unloading and storage of the equipment.

2. Delivered at same time as equipment.

3. Storage of the centrifuge shall be in a dry building per ANDRITZ Separation Inc. instructions.

4. All products shall be properly insured.

1.08 CONDITIONS OF SERVICE (N/A)

1.09 SEQUENCING AND SCHEDULING (N/A)

1.10 WARRANTY

The centrifuge manufacturer shall warrant the following components:

A. The manufacturer shall warrant against any defects in material or workmanship to the centrifuge the earliest to occur for a period of 18 months from date of delivery or 12 months from start-up, whichever is the first to occur.

B. The manufacturer shall repair or replace any parts of the centrifuge system that are found to be defective in workmanship or materials during the warranty period, provide said equipment is operated in accordance with the manufacturer's written operating instructions, and provided that the Owner notifies the manufacturer in writing within 10 days after such defect becomes apparent.

1.11 MAINTENANCE

A. Spare Parts: The following spare parts, items (1-2) are to be furnished with the unit or maintained in the manufacturer's inventory, to be available within five (5) business days from receipt of accepted purchase order.

1. One (1) set of main bearings.

2. One (1) set of seals and O-rings.

B. At a minimum one (1) set of the following listed tools shall be included with the centrifuge equipment.

1. One set ball bearing extractor

2. One set needle bearing puller

3. One conveyor lifter

4. One T-handle screw

5. One socket wrench for lube nipple

6. Threaded rods sized for machine

7. Manual grease pumps

8. Lubricator extension

9. Lubricator CY419 and CY430

10. Lubricator extension with clamps

PART 2.00 MANUFACTURERS

2.01 GENERAL The centrifuge system shall consist of a horizontal solid bowl, fitted with an inner contoured scroll conveyor utilizing a cyclo gear speed inducer for changing the differential speed between the rotating bowl and scroll conveyor. Additional components included in this specification that are to be independently mounted include the control panel(s) and centrate deaerator. System shall include, as a minimum, all controls and instrumentation as specified herein and presented on the drawings. Materials and general design of the centrifuge systems shall be the manufacturer's standard, except as specified hereinafter.

2.02 MANUFACTURERS

A. The equipment furnished shall be the product of a manufacturer that has demonstrated previous successful operation of full-scale units in North America in an application similar to that specified.

B. The centrifuge systems shall be the ANDRITZ Model D4L. Equipment layouts are based on this equipment. Manufacturers proposing "or equal" centrifuges must meet all technical and mechanical requirements as specified herein and must comply with

the pre-approval requirements identified in Section 1.06 above. Any changes to the installation due to use of another manufacturer will be at the bidder's sole expense.

2.03 MATERIAL OF CONSTRUCTION

A. All wetted parts of the centrifuge contacted by process material shall be a minimum of 316 stainless steel except O-rings or abrasion-resistant materials. The O-rings shall be made of Buna-N Viton unless specific processes such as high temperature or food applications require alternate material. The centrifuge bowl shall be constructed of statically cast 316 or duplex stainless steel. The outer bowl cover shall be of reinforced fiberglass and of one-piece construction. The centrifuge conveyor shall be constructed of a minimum 316 or duplex stainless steel.

B. Miscellaneous hardware, including bolts, nuts, washers, and fastener clips, shall be ASTM A320, of 316L stainless steel.

C. No dissimilar metals shall be in direct contact unless properly electrically insulated with a 2 mm thick continuous neoprene gasket.

2.04 CENTRIFUGE EQUIPMENT DESCRIPTION: The centrifuge shall be of the solid bowl horizontal, continuous feed, scroll conveyor type. A high performance conveyor utilizing disc technology shall be provided to allow either counter current or co-current operation or both whichever the application requires. The centrifuge design shall limit air leakage into or from the body of the centrifuge by means of a sealed cover and by minimizing clearances between the feed tube and its housing. Each centrifuge shall be dynamically balanced prior to shipment and shall be designed such that operating noise levels will not exceed 80 dBA at a 1 meter distance from the centrifuge, as measured at the factory with all inlets and outlet openings closed, and running without any process liquids.

2.05 COMPONENTS

A. Bowl

1. The centrifuge bowl shall consist of a horizontal cylindrical-conical assembly. To insure performance capabilities the minimum bowl diameter and length shall be 16.92 inches and 62.67 inches respectively. Proposed units with less than the specified bowl geometry shall not be acceptable. Maximum bowl speed shall be 3,600 RPM, driven by a 40 HP main drive, producing a gravitational force not less than 3,115 G's. The bowl shall be statically cast from 316L / duplex stainless steel. All welded joints shall be examined for cracks, porosity, or other defects by means of a liquid dye penetrate test. Bowl inspection report shall be supplied on request.

2. The front and rear bowl hubs shall be a minimum of 316 stainless steel, statically cast or fabricated from a solid piece of 316 stainless steel. The bowl shall be supported on a cylindrical roller bearing at both the feed and discharge ends of the machine. Each of which shall be fitted for convenient external, high speed grease lubrication.

3. The pond depth in the centrifuge bowl shall be adjustable through the use of adjustable weirs at the large diameter (front) end of the bowl where liquid is

discharged. Pond depth adjustment by individually, specific dimensioned, interchangeable plate dams shall not be allowed. Cake solids shall be discharged from the small diameter (rear) end of the bowl, opposite from the liquid discharge.

4. The bowl shall be manufactured with longitudinal grooves integrally machined into the bowl wall that shall prevent circumferential slippage of the sedimented solids and provide for the formation of a protective cake solids layer. The bowl shall be warranted against wear for a period of up to 35,000 operating hours. Proposed equipment utilizing longitudal strips attached to the bowl wall in lieu of integrally machined grooves shall be provided with a spare bowl assembly complying with item five (5) below. The dewatered cake shall be discharged from the bowl through multiple cake discharge ports spaced evenly around the diameter of the small diameter end of the bowl. The solids discharge ports shall utilize weight balanced, field replaceable, mechanically attached wear nozzles. Nozzles utilizing chemical bonding or metallic brazing attachment methods are not acceptable.

5. The bowl shall be dynamically, independently balanced to allow for exchange of a replacement bowl without need for balancing of the assembled rotating assembly.

B. Scroll Conveyor

1. The centrifuge shall include a 316 stainless steel horizontal cylindrical-conical scroll conveyor supported by a spherical roller type thrust bearing at the feed (front) end and ball type bearings internal of the gearbox cake discharge (rear) end and shall be equipped with helical, open design flights independently mounted concentrically within the centrifuge bowl. To insure maximum loading and dewatering efficiencies, solid, full depth flight designs are not acceptable. Bearings shall be protected by seals and be provided with grease fittings for lubrication. To convey sedimented solids to discharge, the internal scroll conveyor shall rotate at a slight differential speed from the bowl. The scroll will be driven by a 10 HP non connected load, power generating, alternating current back drive system.

2. Sludge feed shall be introduced to the bowl through a multi port feed chamber fabricated within the body of the scroll conveyor which evenly distributes the feed into the rotating assembly. The feed chamber wall assemblies shall be protected from abrasion wear by flame sprayed tungsten carbide hard surfacing. Replaceable urethane and inverted type accelerators within the feed chamber are not acceptable. The sludge feed shall enter the bowl from the feed chamber through multiple sludge feed ports spaced evenly around the diameter of the feed chamber. The sludge feed ports shall utilize weight specific, mechanically attached, field replaceable wear nozzles. Nozzles utilizing chemical bonding or metallic brazing attachment methods to the scroll body are not acceptable.

3. The scroll conveyor edge and face of the flights shall be protected against abrasion with full flighting length, weight specific, sintered tungsten carbide tile insert. The tungsten carbide tile insert shall be attached to a 316 stainless steel backing plate and the backing plate shall be attached to the conveyor flight by an

electric welding attachment procedure. To eliminate tile backing plate detachment from the mother flighting, the wear tile assemblies shall not extend more than 5/16" past the top of the mother flighting. Wear tile hardness shall meet or exceed 2500 Vickers hardness and pass the requirements of ASTM G-65 testing procedures. A 15,000 hour wear guarantee shall be provided for the wear tile assemblies. In lieu of the 15,000 hour wear guarantee a spare, replacement scroll may be provided. Partial flighting length tile assemblies and flame sprayed configurations are not acceptable.

4. Tile wear shall be monitored by means of visual inspection. Measurable wear to the outer tile edge tips and face shall indicate service schedules. Tile replacement shall be capable of being made in the field without creating unbalanced conditions by removal of the old assembly and welding a new assembly in place.

5. The centrifuge conveyor shall be removable without disconnection and displacement of the main drive, backdrive or removal of the bowl from the unit's base framework.

6. The scroll shall be independently balanced at full operational speeds prior to shipment. Certification of the balancing procedure shall be provided from a professional engineer licensed in the United States of America. A verifiable scroll exchange and refurbishment program shall be provided to the end user as part of the centrifuge scope of supply. A verifiable reference that has benefited from the supplying manufacturer's scroll exchange program is required for approval of the proposed centrifuge supplier for this project.

C. Bowl Cover

1. The outer cover shall be molded of fiber reinforced plastic (FRP) material. The outer cover shall be protected from abrasion in the solids discharge area by a stainless steel inner shroud designed to resist abrasion and prevent direct contact of material with the outer cover. The inner casing shall be a minimum of 0.5" thick stainless steel. The wetted interior surface of the shroud shall be coated with tungsten carbide wear surfaces. The solids discharge inner shroud shall be field removable without removal or displacement of any rotating assembly component.

2. The outer cover shall be bolted directly to the main frame of the centrifuge.

D. Main Drive Motor

1. The centrifuge shall be furnished complete with a main / bowl drive motor utilizing a V-belt drive system. The main drive motor is to be rated for continuous duty and to have a horsepower output sufficient for operating conditions of maximum bowl speed and sludge feed rate. The motor service factor is not to be used in determining a non-overload condition. The motor torque shall be adequate for all operating conditions.

2. The main drive motor shall be a minimum of 40 HP, 1800 RPM, 60 Hertz, 3 phase, 1.15 S.F. high efficiency design as manufactured by Baldor or equal.

3. The main drive motor shall include the following features:
    a. Frame motor
    b. TEFC
    c. Horizontal squirrel-cage type
    d. High efficiency
    e. Class F insulation
    f. 1.15 service factor
    g. Corrosion resistant rotor and stator
    h. Condensate drain
    i. Gasketed conduit box
    j. Low noise design
    k. Stainless steel nameplate
    l. Thermal switch

4. Sound level of the main drive motor not to exceed 80 dBA at a distance of one (1) meter as measured at the factory with all inlet and outlet openings closed, and running without any process liquids.

5. For easy access the drive belts and sheaves shall be covered with a molded fiber reinforced plastic (FRP) material protective guard independent of the main centrifuge cover.

E. Backdrive Motor

1. Each centrifuge shall be equipped with a backdrive system to allow the adjustment of the differential speed between the centrifuge bowl and conveyor during operation. The backdrive system shall utilize an AC/VFD arrangement meeting the following requirements:

2. The backdrive motor shall be a minimum of 10 HP, 1,750 RPM, 60 Hertz, 3 phase, 1.15 S.F. high efficiency design as manufactured by Baldor or equal.

3. The backdrive motor shall be mounted directly below and vertically in-line with the main drive motor. Due to space considerations, designs not utilizing a vertical in-line main and backdrive configuration will not be acceptable. Secondary or backdrive motors that operate as a connected load shall not be acceptable. Hydraulic backdrive shall not be acceptable.

4. The backdrive motor shall include the following features.
    a. NEMA frame motor
    b. TEFC
    c. Horizontal squirrel-cage type
    d. High efficiency

e. Class F insulation
f. 1.15 service factor
g. Corrosion resistant rotor and stator
h. Condensate drain
i. Gasketed conduit box
j. Low noise design
k. Stainless steel nameplate
l. Thermal switch

F. Base: The centrifuge shall be supported on a fabricated carbon steel base mounted on vibration isolators. The vibration isolators shall be selected and provided by the manufacturer for the service required to isolate the centrifuge unit from the building structure. Isolators shall be specifically sized depending on bowl speed and service conditions so that they have a minimum dampening effect of 98% of all vibration loads in all directions. Machined surfaces shall be provided at all points where support loads are transferred to the base. Lifting holes in the base shall be provided as required for lifting of the base by overhead crane. Overall dimensions of the centrifuge shall not exceed 133 inches long by 43 inches wide by 59 inches tall. Total dry weight of the equipment shall be a minimum of 6,614 lbs.

G. Chutes & Connections: Chutes to direct the flow of discharged cake solids out of the solids casing shall be supplied by the installing contractor and be connected to the centrifuge solids casing via a flexible coupling. A centrate chute shall be provided by the installing contractor and directly coupled to the liquid outlet flange via a flexible coupling. All piping connections for the sludge feed slurry, wash water, polymer injection, cake solids and centrate discharge chute connections, shall be equipped with flexible sleeves fabricated from neoprene and designed such that no exterior loads are transferred to the other equipment. The centrifuge manufacturer shall provide the above referenced flexible connectors.

H. Feed Manifold: The centrifuge shall be equipped with 316L Stainless Steel manifold which shall contain a triple tap connector assembly supplied by the centrifuge manufacturer at the feed inlet providing for feed, polymer, sample, and wash water connections. Depending on site installation and application the installing contractor shall provide for alternate polymer injection points in the sludge feed piping as directed by the engineer or equipment manufacturer.

1. Sludge feed tap - Shall be a 2 inch ANSI Standard Flange

2. Sludge feed sample tap - Shall be a 1 inch female NPT with a 1 inch female full port 316L Stainless Steel ball valve for manual sampling

3. Polymer feed tap - Shall be a 1 inch female NPT

4. Wash water tap - Shall be a 1 inch female NPT with an electrically controlled solenoid valve

5. The minimum feed pressure shall be 7.5 psi at the centrifuge.

I. Sample Taps: Sample taps shall be provided by the installing contractor in the cake and discharge chutes addressed in paragraph G above. Sample collection points shall be oriented for easy access according to the installation site requirements.

J. Main Centrifuge Bearings: Two main bearings shall support the entire rotating assembly. Pillow block bearings shall be cylindrical roller, each of which shall be equipped with an external grease lubrication point. Bearings shall have an AFBMA L-10 life of 100,000 hours minimum.

K. Speed Reducer: Each centrifuge shall be equipped with a cyclo speed inducer unit which is used to achieve differential speed between the centrifuge bowl and conveyor. The speed inducer shall have a torque capacity to meet the expected service conditions and shall be capable of withstanding a 500% momentary overload and 150% intermittent overload. Torque overload control shall be provided to initiate centrifuge shutdown in the event of conveyor overload. Mechanical over torque protection devices are not acceptable. The centrifuge manufacturer shall select the reduction gear ratio as required for the solids to be handled and to be consistent with satisfactory operation. The gear unit shall be grease lubricated. All standard units shall be provided with seals of Nitrile-Butadiene-Rubber (NBR 3760). The power transmitting elements shall be made of bearing steel, hardened, tempered and ground. A reinforced fiberglass safety guard / cover shall be provided to cover the speed inducer. The speed inducer shall be independently balanced to allow speed inducer replacement without re-balancing of the rotating assembly. Hydraulic, Viscotherm / Rotodiff, Eddy Current, or gearboxes requiring external lubrication systems will not be acceptable.

L. Machine Wiring: The centrifuge shall be supplied with the following NEMA 4X rated components: stainless steel terminal box, bearing temperature probes for the rotating assembly support bearings and vibration sensor. All components shall be wired complete to the terminal box excluding power leads for the centrifuge drive motors. Wire runs from machine mounted electrical control components to the machine mounted terminal box shall be rigidly mounted to the centrifuge frame. Main and backdrive motor field connections shall be flexible, meeting all applicable electrical codes and provided by the installing contractor.

M. Fasteners: All fasteners supplied with the centrifuge unit which are subject to contact with any process flow or cake discharge shall be 316 stainless steel.

N. Anchor Bolts: All anchor bolts and accessories necessary for equipment attachments and incorporation into the concrete supporting structure shall be supplied by the contractor, according to manufacturer's recommendations.

O. Paint: All carbon steel surfaces shall be painted / coated to a minimum of the following criteria.

1. Minimum surface preparation of thorough removal of burrs, complying with SSPC-SP3 standards, sandblasting complying with SSPC-SP5 standards, and complete grease removal.

2. A minimum coating of primer utilizing a two-part, zinc chromate epoxy, anti-rust primer meeting AFNOR: FAMILY I Class 6b requirements. Each coat shall have a dry film thickness of 2.5 to 3.0 mils.

3. A minimum of one paint undercoat of epoxy, phenolic, polyamide coating meeting AFNOR FAMILY I Class 6b requirements with a minimum dry film thickness of 4 to 6 mils.

4. One finish coat of epoxy, phenolic, polyamide coating meeting AFNOR FAMILY I Class 6b with a minimum dry film thickness of 4 to 6 mils.

5. Total thickness of coatings must be a minimum dry film thickness of 12 mils.

2.06 INSTRUMENTATION AND CONTROL

A. General: The control system shall be complete with one (1) industrial grade control panel.

B. Centrifuge Control Panel (CCP)

1. The CCP shall be a NEMA 4X stainless steel, double door free standing enclosure with a side mounted air conditioner for the temperature and humidity control. The CCP shall be UL508A listed.

2. The CCP shall include a main circuit breaker with a disconnect handle that can be locked in the off position. The main circuit breaker shall be a 22,000 symmetrical amp thermal magnetic breaker sized in accordance with centrifuge system requirements.

3. Main control power components shall consist of variable frequency drive controllers with short-circuit and overload protection for bowl and scroll motors, power line reactor, DC bus fuses equipped with blown fuse switches and a control transformer.

4. Main Internal Control Components Shall Consist of: Programmable Logic Controller (PLC), surge suppressor, power supply, Ethernet switch, communications modem, control relays, and terminal points for interconnection with ancillary equipment.

5. Door mounted components shall consist of VFD interface keypads (one (1) for each VFD) shall be door mounted for safe access to parameters while the panel is under power. This port shall limit maintenance personnel's exposure to arc flash dangers as detailed in NFPA 70E. NEMA 4X illuminated selector switch, mushroom head maintained emergency stop, NEMA 4X 120 VAC laptop receptacle with an Ethernet programming port, and a 10" color touch screen Operator Interface Terminal (OIT) NEMA 4X indoor rated. Third party controllers and interface units and European imports will not be allowed.

6. The CCP panel shall operate from a 480V AC, 3 phase.

7. Each centrifuge VFD shall be Allen-Bradley 755 series

8. The backdrive system shall provide for the regeneration of electrical power to the main drive motor as follows:
   a. The main drive motor and backdrive motor shall be electrically connected to a main and secondary variable frequency drive (VFD) at their respective AC circuit outputs.
   b. The positive and negative terminals of the DC circuits of both VFD's shall be electrically connected.
   c. The cycloidal properties of the speed reducer outlined in Paragraph 2.05.K of these specifications will allow the backdrive motor to function as a generator.
   d. The power generated by the backdrive motor shall be recovered by the secondary VFD and transmitted through the DC bus to the main VFD, thereby reducing power consumption from the outside grid.
   e. The power generated by the backdrive motor shall allow for and provide flying restart capabilities. Drive designs that do not provide flying restart capabilities are not acceptable.
   f. Backdrive systems which regenerate power to the outside grid shall not be acceptable due to higher overall power consumption.
   g. Backdrive systems utilizing eddy current brakes, direct current or hydraulic drives are not acceptable.

9. The CCP shall comply with IEEE 519 at the point of common coupling.

10. The control transformer shall be sized for a minimum of 150% of the calculated load.

11. The PLC shall be Allen-Bradley CompactLogix. All control logic and algorithms shall reside within the PLC. Third party and proprietary controllers and interface devises will not be allowed. The PLC shall have adequate memory allowing 25% space for future program additions. The PLC shall be capable of interfacing directly with a plant SCADA system via Ethernet IP. An Ethernet switch with a minimum of two (2) spare ports shall be provided for this connection.

12. The OIT shall be Allen-Bradley PanelView+CE with a minimum 10" screen measured diagonally or approved equal. The OIT shall communicate via Ethernet IP to the PLC. Third party and proprietary controllers and interface devises will not be allowed.

13. The OIT is a color display with touch sensitive technology and shall be 120 VAC. All operator functions and displays shall be provided with clear intuitive graphic touch cells and displays on the OIT.

14. The PLC shall be configured to accept process optimization code for future control upgrades.

15. An industrial din rail mounted Ethernet switch shall be provided with enough ports to link all required network connections. A minimum of one (1) spare port is required for future connections.

16. A door mounted maintenance interface port shall be provided to assist in programming and troubleshooting. This port shall limit maintenance personnel's exposure to arc flash dangers as detailed in NFPA 70E.

17. A backplane mounted elapsed time meter shall be provided for the main drive. Battery operated meter is not acceptable.

18. All components in the CCP shall be factory wired. All external control connection points shall terminate on terminal points. There shall be a minimum of 20% spare digital and analog inputs and outputs all factory wired from the I/O cards to its corresponding terminal strip.

19. Control wire shall be #16 AWG minimum, shall conform to UL standards, and shall be type THHN, THW or MTW.

20. A ground lug shall be supplied on the panel.

21. All customer interface contacts are provided through isolated 10 amp interposing relays. Contacts shall be suitable for 24 VDC or 120 VAC control.

22. Each wire segment shall be numbered at each end using white tubular heat shrinkable markers with black permanent mechanically stamped legends. The wire numbers shall correspond to those on the wiring diagram. Wrap around or clip type numbers are not acceptable.

23. Each internal component shall be labeled and shall agree with the wiring diagram. Letters shall be black on a white background to prevent obscuring text

24. Field mounting of the control panel and interconnecting wiring between the centrifuge, operator panel, and starter panel shall be provided by the installing contractor.

25. A modem shall be installed capable of communicating directly with the PLC, OIT and VFDs for remote diagnosis and updates.

C. The OIT shall as a minimum be capable of:

1. Automatic one touch starting and stopping.
   a. Including automatic torque control and conveyor/diverter gate operation based on operator settable parameters.
   b. Automatic status indication and individual component status.
   c. Auto start and stop adjustments shall be configurable via password protected operator inputs.
      01. Wake Mode - Defined as an early start feature in which the centrifuge will start, unattended, at a predetermined time before an operator starts his shift.
      02. Sleep Mode - Defined as an automatic shutdown feature that will shut down and flush out the centrifuge, unattended, at a predetermined time after an operator has ended his shift.

d. Pause Mode

01. Pause for process repairs
02. Pause for Bin Removal

2. Manual stop and start operations and status of each individual system component.

a. Status indication and control including.

01. Centrifuge Start Stop
02. Wash water valve
03. Sludge pump
04. Polymer pump
05. Conveyor forward and reverse

b. Safety interlocks shall remain active in manual mode.

3. Clean-in-Place (CIP) one touch starting and stopping.

a. CIP status indication and individual component status.

b. CIP adjustments shall be configurable via password protected operator inputs.

D. The OIT shall be capable of displaying and adjustment of all pertinent system variables and settings.

1. Display of system variables

a. Centrifuge drive motor amps and percent of full load

b. Centrifuge bowl speed (Actual and Setpoint)

c. Back drive speed (RPM) (Actual and Setpoint)

d. Differential speed (Actual and Setpoint)

e. Torque (Actual and Setpoint)

f. Bearing temperatures

g. Vibration

h. Sludge flow rate

i. Polymer flow rate

j. Wake time

k. Sleep time

2. Display of all system related alarms

a. Centrifuge shutdown alarms. When one of these alarms is triggered an automated stop shall be initiated.

01. Main motor over temperature
02. Main drive VFD fault
03. High High vibration
04. Backdrive motor over temperature

05. Backdrive VFD fault
06. High High Torque
07. 3 STRIKES YOU'RE OUT alarm
08. High High feed end bearing temperature
09. High High drive end bearing temperature
10. Cake discharge conveyor/ system fault

b. Ancillary related alarms. A Pause shall be initiated stopping all process related equipment. Once the alarm has been cleared the operator shall be able to resume the process. If the operation has not been reestablished within an hour the centrifuge shall be forced into Auto Stop mode.

01. Sludge related faults
02. Polymer related faults

c. Centrifuge 3 STRIKES YOU'RE OUT ALARM. This shall initiate a flush sequence. If three high vibration or high torque alarms occur within a ten-minute time limit an auto stop sequence will be initiated.

01. High torque
02. High vibration

d. Warning alarms. These will only set a warning horn and light but will not trigger any other actions.

01. High drive end bearing temperature
02. High feed end bearing temperature

3. Operator input control variables

a. Centrifuge operation and processing

01. Differential speed (Set point in RPM)
02. Torque (Set point in percentage)
03. Sludge flow (Set point in GPM)
04. Polymer flow (Set point in GPH)
05. Wake time (Set point in 24 hour format)
06. Sleep time (Set point in 24 hour format)

b. Operator input variables related to process and operations calculations.

01. Sludge feed flow solids content (registered in percent total solids (% TS) and based on lab analysis of samples collected).
02. Polymer make down dilution (registered in percent dilution of polymer by volume), if an automatic polymer dilution system is provided. The system shall provide the system the proper inputs / outputs to the CCP.
03. Centrate solids content (registered in percent suspended solids (% TSS) and based on lab analysis of samples collected).
04. Dry cake solids (registered in percent total solids (%) & based on lab analysis of samples collected).

c. Sum of mathematical calculations for determining production and optimization.

01. Sludge feed flow in GPM

02. Sludge feed flow in GPD (To be automatically reset by internal clock at 12:00 am daily)
03. Previous day total flow
04. Gallons processed (Totalized) Wet pounds per hour
05. Daily run time (To be automatically reset by internal clock at 0:00 daily)
06. Run time totalized (Run time with sludge feed)
07. Dry pounds per hour processed (Based on real time feed flow rates)
08. Pounds per ton of polymer dosage (Based on real time polymer feed flow rates)
09. Cubic yards of cake production per hour (Based on real time feed flow rates)
10. Supervisor input system variables
11. Capture Efficiency

d. Supervisor input parameters (Password protected)

01. Centrifuge bowl speed (Setpoint)
02. Centrifuge configuration settings. (Machine specific)
03. Alarm limits
04. Scaling values
05. CIP settings
06. Torque PID settings

4. The centrifuge setup parameters shall be fully configurable from password protected screens including alarm set points, scaling variables and CIP settings.

5. A screen shall be provided within the OIT to provide the operator with on-line help pages for each controlled device. The help pages shall include relevant flow charts and written descriptions as provided in the O&M manual.

6. A screen shall be provided to display the input and output statuses for both digital and analog signals of the PLC. This is to be used to limit maintenance personnel's exposure to arc flash dangers as detailed in NFPA 70E while performing trouble shooting duties.

E. Interface Requirements

1. Centrifuge Control Panel (CCP)

a. Power input from customer supply

01. 460 VAC, 3 Phase, 60 HZ, 50 amps

b. Power output from CCP to motors

01. Bowl drive motor
02. Scroll drive motor

c. Inputs from Motors

01. Bowl drive motor temperature switch
02. Scroll drive motor temperature switch

d. Inputs to CCP from customer supplied equipment (digital)

01. Polymer pump run confirm
02. Polymer pump fault
03. Sludge pump run confirm
04. Sludge Pump fault
05. Conveyor running forward
06. Conveyor running reverse
07. Conveyor overload signal

e. Inputs to CCP from machine junction box (Analog)

01. Centrifuge vibration
02. Drive end bearing temperature
03. Feed end bearing temperature

f. Inputs to CCP from customer supplied equipment (Analog)

01. Polymer pump flow and / or speed
02. Sludge pump flow and / or speed

g. Outputs from CCP to customer supplied equipment (Digital)

01. Polymer pump run command
02. Sludge pump run command
03. Cake conveyor run command forward
04. Cake conveyor run command reverse

h. Outputs from CCP to field mounted devices

01. Wash water valve open command
02. Cake conveyor water valve open command

i. Outputs from CCP to field mounted devices (Analog)

01. Polymer pump speed setpoint
02. Sludge pump speed setpoint

F. Description of operation

1. CCP emergency stop shall de-energize the master control relay to interrupt all run commands for immediate shutdown. To restart system, the emergency stop(s) must be manually reset.

a. Starting and Stopping modes

01. On the “Main” screen select the system operating mode by touching one of the mode select touch zones. All equipment must be stopped to change modes; this will be indicated by the mode select enabled indicator.
02. Manual Mode – In this mode, system components shall be started with their respective start pushbuttons, which shall be accessed by touching the manual control touch zone that displays the “Manual Control” screen. Emergency stop will always stop all equipment. This mode of operation is provided for maintenance purposes only. (This mode is password protected).
03. Auto Mode – (Wake and Sleep Mode) In this mode, start-up and shutdown shall be controlled from the auto start/auto stop pushbuttons or Start-up shall be controlled from the “Wake Mode”

screen by operator entering a predetermined time for system to begin process operation, up to a maximum of 24 hour delay. Auto start will initiate the sequence of events described below. At any time while in the Auto mode the operator can begin a start-up or shutdown. After a start-up has been completed the operator shall be capable of entering a shutdown time on the “Sleep Mode” screen to end a process run. At the end of the run time the control system will automatically begin a shutdown and cleaning cycle. The OIT shall display all automatic conditions and allow control of all time settings.

04. CIP Mode – Clean in Place (CIP). In this mode, start-up and shutdown shall be controlled from the CIP start/stop pushbuttons.
05. Pause Mode – Pause refers to the temporary stopping and starting of the process pumps etc. When a process alarm triggers or the Pause pushbutton is pressed the sludge and polymer will come to a stop. With a Bin change pause, the sludge and polymer shall stop, the wash water valve will open for a variable time to push the majority of the material out the solids end of the machine. Once the wash water de-energizes, spillage will be at a minimum allowing a cleaner method of changing cake bins. In either case, depressing the Resume push button, the process pump shall restart at the last know settings.

b. The Auto Start cycle will initiate the following sequence of events

01. Centrifuge bowl drive starts (instantly)
02. Centrifuge backdrive starts (3 second delay from bowl starting)
03. Polymer system starts (once bowl and back drive come to speed)
04. Sludge feed pump starts (duration as set on “Setup 2” screen)
05. Conveyor starts in reverse direction (instantly)
06. Conveyor starts in forward (when torque is reached as on “Setup 2” screen)
07. While Auto start is in progress the Auto start indicator light will flash “STARTING IN AUTO”. After start-up is complete the indicator light will stay on steady “RUNNING IN AUTO”.

c. The Auto Stop cycle will initiate the following sequence of events

01. Sludge feed pump (instantly)
02. Polymer system stops (instantly)
03. Centrifuge goes to relative speed control (instantly)
04. Centrifuge goes to auto stop preset speed #1 (at normal deceleration ramp)
05. Wash water valve opens (once centrifuge is at preset speed #1)
06. Centrifuge remains at this preset speed #1 (duration as set on “Setup 2” screen)
07. Centrifuge goes to auto stop preset speed #2 (at normal deceleration ramp)
08. Centrifuge remains at this preset speed #2 (duration as set on “Setup 2” screen)
09. Centrifuge stops (at normal deceleration ramp)
10. Wash water valve closes (at bowl speed set on “Setup 2” screen)
11. The conveyor will stop once the purge cycle times out
12. CIP will be initiated

13. While Auto stop is in progress the Auto stop indicator light will flash "STOPPING IN AUTO" while in progress and go on steady "STOPPED IN AUTO" when complete.

d. CIP Mode – Clean in Place (CIP). In this mode, start-up and shutdown shall be controlled from the CIP start/stop pushbuttons. Operating the CIP start pushbutton or an auto stop will initiate a CIP cycle as described below.

01. Centrifuge bowl drive starts (instantly)
02. Centrifuge backdrive starts (3 second delay from bowl run confirm)
03. Wash water valve opens (instantly)
04. The duration and speeds for the CIP cycle are set on "Setup 2" screen.
05. Operating the CIP Stop pushbutton will initiate the following sequence of events:

e. Torque / Relative Speed Control – The centrifuge shall operate in two different control modes torque control (PI Auto) or relative speed control (PI manual). The active control mode is indicated below the centrifuge graphic on the main screen. To access control mode selection and setpoint entry, touch the centrifuge graphic, this will display the Torque control screen. The control mode is selected by touching either the Auto or Manual touch zones. Touching the numeric display of the current setpoint, which brings up a numeric entry keypad, enters the setpoint. The setpoint range is 0-100% * for Torque setpoint and 0-XX ** for Relative speed setpoint. This range can be limited to a maximum below 100% to prevent possible process upsets and equipment damage. This is configurable in the "system" setup.

f. Feed Control – Touching either pump graphic shall access the speed/flow setpoints for the polymer and sludge pumps. The "Polymer and Sludge Setup" screen will be displayed. Touching the numeric display below the word setpoint will bring up a numeric entry keypad. The setpoint range is 0-XXX GPM or GPH. This range can be limited to a maximum to prevent possible process upsets and equipment damage. This is configurable in the "system" setup screen.

g. Alarm Control – Alarm conditions shall be indicated with red background on the alarm screen and shall cause alarm horn to sound and beacon to flash. Alarm indicator will go on steady as long as condition is still in fault condition. Operating silence pushbutton will silence horn and cause indicator to flash only if condition has been cleared. Operating reset button will clear alarm indicator and allow system start-up. Normal none alarm condition shall be indicated by alarm indicator text in green. High vibration or high torque shall initiate a pause and flush sequence, Duration of the flush time shall be operator adjustable through touch screen. Once the high vibration or high torque alarm condition clears, feed to the centrifuge shall automatically resume. If three high vibration or high torque alarms occur within a ten-minute time limit, an auto stop sequence shall be initiated.

h. Passwords – The OIT shall be capable of storing several different passwords allowing access to several levels of operation / maintenance or adjustments. There shall be at a minimum four (4) passwords. The passwords (numerical) shall be for the following, up to 5 different passwords can be provided for each level, except the SYSTEM password. The OIT will retain the date / time

and password utilized for any of the password types below for up to 10 entries / instances.

01. System – The system password shall be the top level password known only by ANDRITZ. This password is to access manufacturer only areas of the OIT that allow for OEM set points and setup parameters to be maintained. The system password will be provided either after the warranty period or if a maintenance service contract is in affect once it has been expired. The system password once activated allows unrestricted movement through all of the OIT functions as described within the "PASSWORDS" area. The OIT will require a password re-entry if no activity is detecting after 15 minutes.
02. Operator – The operator password is required to operate the centrifuge and is for the most part a generic password. This password allows for Automatic operation of the centrifuge only. The operator is only able to make changes that affect the performance of the centrifuge such as flow, torque and polymer. The OIT will require a password re-entry if no activity is detected within 120 minutes. The requirement for an "OPERATOR" password can only be bypassed in the OEM setup parameters.
03. Maintenance – The maintenance password shall be provided to the owner for distribution as needed and allows for the full operation of the system in Automatic as described above for the "OPERATOR" level as well as being able to operate the system in "MANUAL" mode. The OIT will require a password re-entry if no activity is detected within 15 minutes. The requirement for a "MAINTENANCE" password can only be bypassed in the OEM setup parameters.
04. Lube Reset – The Lube Reset password shall be provided to the owner for distribution as needed and allows for the reset of the lubrication indicator for the Main Bearings. If the lube reset is not reset 10 hours after the prescribed time, the centrifuge will either automatically shut down or not start.

PART 3.00 EXECUTIONS

3.01 EXECUTION (N/A)

3.02 PREPARATION (N/A)

3.03 ERECTION / INSTALLATION APPLICATION

A. Manufacturer's Representation for Start-Up and Testing

1. A manufacturer's technical representative for the equipment specified herein shall be present at the jobsite and/or classroom designated by the Owner for eight (8) workdays (a workday is an eight (8) hour period on site) for the services listed below. The following services shall be provided with allocation of workdays as established by the owner with the following distribution as a guide:

   a. Four (4) workdays for onsite inspection, certification of installation and for pre-start-up classroom and onsite equipment instruction and maintenance training.

b. Four (4) workdays for start-up and performance testing and for post-start-up classroom and onsite equipment instruction, troubleshooting, and other follow-up services.

B. Workdays shall be eight (8) hour days, Monday through Friday, with dates determined by the Owner after a request by the contractor.

3.04 FIELD TESTS

A. Functional Test: Functional testing shall be performed for each centrifuge installed. Prior to system start-up, system components shall be inspected for proper alignment, proper connection, and satisfactory operation. The Manufacturer's representative shall inspect installation, check for lubrication and minor adjustments, provide certification that the system components have been installed correctly and are ready for operation. The performance test shall not begin until functional testing has been completed to the Owner's and Engineer's satisfaction.

B. Performance Test

1. After plant start-up, the Manufacturer shall conduct a performance test using the Owner's sludge to determine the actual system operating conditions and verify that the unit meets the minimum requirements specified herein.

2. Prior to the performance tests, the Manufacturer shall perform testing as necessary to determine and recommend the most effective type of polymer to produce the specified performance.

3. The Owner shall provide sludge feed, water, electrical power, and sludge cake disposal necessary to conduct the performance tests. The polymers required shall be provided by the Owner at the recommendation of the centrifuge manufacturer.

4. The cost of laboratory testing necessary to confirm centrifuge performance for the initial test shall be borne by the Owner.

5. If, after a minimum of two 4-hour test runs, with three (3) rounds of sampling per run in the opinion of the Owner, the system meets the minimum performance requirements specified herein, the Engineer will recommend, by letter, the official acceptance of the centrifuge. If, in the opinion of the Engineer, the performance test results do not meet the requirements specified herein, the Engineer will notify the Owner and Contractor of non-acceptance performance.

6. In the case of non-acceptable performance, the manufacturer shall then have 60 days in which to perform at its sole expense, any supplemental testing, equipment adjustments changes or additions and to perform a retest of the non-acceptable system.

7. If in the opinion of the Engineer, a performance acceptance test or retest is successful and meets the requirements specified herein, the Engineer will recommend, by letter, the official acceptance of the equipment.

Budget Proposal D5L Centrifuges

Betasso WTP, Boulder, CO

Budget Proposal No1370490
Date: 11/17/2013

By : Bruce SoRelle
Tel : (817) 419-1730
Email: bruce.sorelle@andritz.com

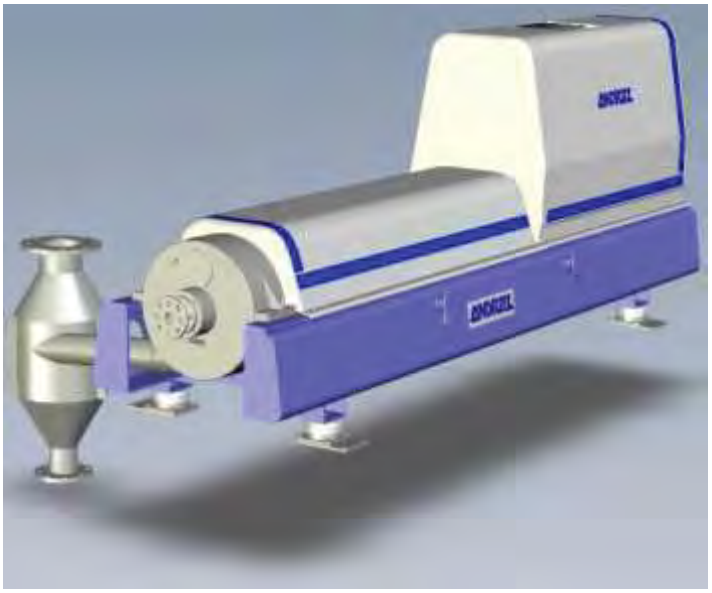

John Bratby PHD., PE
Vice President-Senior
Process Engineer
Brown and Caldwell
1697 Cole Blvd. Ste 200
Golden ,CO 80407
PH: 303-239-5452
Cell: 720-320-3744
Email: jbratby@brwncald.com

ANDRITZ SEPARATION INC.
1010 Commercial Blvd S.
Arlington, Texas 76001, USA
Phone: +1 800 433 5161
Fax: +1 817 468 3961
separation.us@andritz.com
www.andritz

Confidential document. All rights reserved. No duplication or disclosure to third parties permitted without the written consent of ANDRITZ SEPARATION INC.

TABLE OF CONTENTS

Cover Letter 3

1.0 OPERATING CONDITIONS & SIZING & PERFORMANCE 5
1.1 ANTICIPATED OPERATOR CONDITIONS 5
1.2 ANTICIPATED SIZING & PERFORMANCE 5
2.0-A. TECHNICAL DATA D5L CENTRIFUGE 6
2.0-B TECHNICAL DATA D5LX CENTRIFUGE 8
3.0 CENTRIFUGE FEATURES & BENEFITS 5
3.1 DECANTER CENTRIFUGE GENERAL CHARACTERISTICS 5
3.2 OPERATING PRINCIPLE 5
3.3 HIGH PERFORMANCE SCROLL 5
3.4 WEAR AND ABRASION PROTECTION 6
3.5 ENERGY RECOVERY SYSTEM 7
9
3.6 CYCLO-SUMITOMO GEAR BOX 10
3.7 INSTALLATION OF THE DECANTER 10
4.0 DOCUMENTATION & COMMISSIONING 11
4.1 TECHNICAL DOCUMENTATION 11
4.2 COMMISSIONING 11
5.0 BUDGETARY OFFER 12
5.1 PRICING SUMMARY D5L CENTRIFUGE 12
5.2 EXCLUDED FROM ANDRITZ SCOPE OF SUPPLY 14
6.0 COMMERCIAL SUMMARY 15
6.1 GENERAL COMMERCIAL TERMS 15
7.0 STANDARD TERMS AND CONDITIONS OF SALE 16

ANDRITZ SEPARATION INC.
1010 Commercial Blvd. S.
Arlington, Texas 76001
Tel. (817) 465-5611
Fax (817) 468-3961
separation.us@andritz.com

November 17, 2013

Brown and Caldwell
1697 Cole Blvd. Ste. 200
Golden, CO 80407

Subject: Betasso

Dear Mr. Bratby

We are pleased to submit our information offering the ANDRITZ high solids decanter centrifuge technology for your sludge dewatering project. We have sized the D5L based on the sludge production of 3400 lbs/day for seven day week operation. The centrifuge has been sized to accommodate the hydraulic loading operating 5 days per week 7 hours per day. We have considered the poor SVI which indicates that gravity settling of Alum/ PAC sludge may be difficult prior to dewatering. Testing has been conducted in our laboratory using approved potable water treatment polymers as requested. We highly recommend onsite pilot testing for accurate sizing of this water treatment sludge. The chart below represents hydraulic loading of this sludge based on requested operating hours.

Feed Solids % T.S.	Flow Rate GPM	Solids Loading Lbs.TS/Hr.	Recommended Centrifuge
0.79	171	680	D5L
1.0	135	680	D5L
1.5	90	680	D5L/D4LL
2.0	68	680	D4LL/D4L

Please find enclosed our budgetary pricing, technical specifications and drawings as well as general information on the ANDRITZ D5L high performance decanter centrifuges.

For your information, the ANDRITZ **centrifuge** is a product of several coordinated ANDRITZ owned manufacturing facilities. **The ANDRITZ proposal will be the only proposal you receive with 100% ANDRITZ (primary vendor) content**. We design, manufacture and assemble our centrifuges, components and controls. We accept full responsibility for our equipment and offer a control system with user-friendly manipulation that we feel is second to none.

Features like

- Special HP scroll for the **highest cake dryness**

ANDRITZ SEPARATION INC.
1010 Commercial Blvd. S.
Arlington, Texas 76001
Tel. (817) 465-5611
Fax (817) 468-3961
separation.us@andritz.com

- Open flights for the **best centrate** quality,
- **Bowl of 316L** stainless steel construction,
- Field replaceable full length **tungsten carbide conveyor tiles - with up to a 20,000 hour wear warranty**,
- Field replaceable **tungsten carbide protected feed and discharge ports**,
- Field replaceable **tungsten carbide tiles protected discharge casings**,
- **Independent balancing** of bowl, gearbox and scroll
- **Lowest specific electric energy consumption** due to patented energy feedback (up to **20% energy savings on high torque applications**),
- **Simple operation** due to fully automatic torque-controlled regulation,
- **VFD bowl and scroll conveyor** which improves process results and increases life cycle and allows managers to reduce power costs during different season as sludges change,
- **Minimum space and maintenance requirement** due to in-line design,
- **Scroll exchange program** to eliminate spare parts inventory,
- **More than 10,000 ANDRITZ centrifuges** are installed around the world and have placed ANDRITZ at the forefront of centrifuge technology.
- **Seven (7)** dedicated service centers within North America.

The information is being furnished based on the ANDRITZ standard scope of supply and design. Should you have any further questions or concerns regarding this quotation please contact our sales representative Mike Tooley (925)225-1900 or feel free to call me at (817) 419-1730.

Once again, we thank you for your time and look forward to hearing from you soon.

Sincerely,
ANDRITZ Separation Inc.

Bruce SoRelle,
Western Regional Sales Manager
1world.1team.
Shaping The Future Together

Cc: File
o Miscowater

ANDRITZ SEPARATION INC.
1010 Commercial Blvd. S.
Arlington, Texas 76001
Tel. (817) 465-5611
Fax (817) 468-3961
separation.us@andritz.com

DECANTER CENTRIFUGE TYPE D5L BUDGETARY PROPOSAL

1.0 OPERATING CONDITIONS & SIZING & PERFORMANCE

1.1 ANTICIPATED OPERATOR CONDITIONS

Application	Water Treatment Sedimentation Tank
Operating Cycle(,hrs/day)	7 hours/5 days
Type of sludge (Municipal)	Alum /PAC
Blend	TBD
Feed solids concentration (%TS)	0.79
Hydraulic Loading (GPM)	90-170
Solids Loading Design (lbs/hr TS)	680
Volatile Solids % VS	44
Range of pH	6.1
Capillary Suction Time (seconds)	78
Feed solids SVI (ml/g)	120

1.2 ANTICIPATED SIZING & PERFORMANCE

Decanter type	**D5L**
Number of machines	1
Unit flow (GPM)	90-170
Polymer consumption (active lbs/ton TS)	11-12+/-2
Dryness (%TS)	20
Capture rate (%TSS)	95

- ***1.Note: If the sludge exists, laboratory and pilot testing are highly recommended to confirm process capabilities. This does not represent a guarantee!***
- ***2. Note; It is impossible to confirm polymer consumption without actually having a sludge sample. There are many factors that can affect polymer consumption such as pH ,salt content, particle size***
- ***3. Cake dryness range may fall between 18-24% TS. Dependent of the sludge.***

2.0-A. TECHNICAL DATA D5L CENTRIFUGE

CHARACTERISTICS

Size (L x W x H)	150 x 48 x 69 inch (3,812x 1,228x 1,757mm) (without de-aerator) (Anchor bolts not supplied)
Weight with driving system	9326 pounds (4,230Kg)

DE-AERATOR (CENTRATE CHUTE)

Effluent inlet	Flexible connection supplied (int. diam. 150)
Effluent outlet	ANSI 6 inch
Air outlet	ANSI 8 inch

DRIVE

Main motor (hp)	50-75
Secondary Motor (hp)	10-20
Cyclo reducer (gearbox), nominal torque	62,577 inch pounds (7070N.m)

FREQUENCY INVERTERS

Brand:	Allen Bradley Power Flex Series 755 (6 Pulse)
Communication:	Ethernet

CONTROLS

PLC:	Allen Bradley CompactLogix PLC Processor with Ethernet
Touchscreen:	Allen Bradley Panel View Plus

SCROLL SPEED ADJUSTMENT

Range:	0 - 15 rpm (Redex)
Torque control (dewatering):	based on conveying torque

MATERIAL OF CONSTRUCTION

Wetted parts:	316L Stainless Steel
Frame	Painted Steel
Cover & De-aerator	Fiberglass

BOWL

Inner diameter	20.5” (520 mm)
L/D ratio	3.7
Total length	75” (1,924 mm)
Speed	3,200 rpm
G Force	2,976
G-Volume @2976 G’s	149,520

SCROLL

Counter current design High Performance	
For dismantling purposes:	
Total length of scroll with handling hoist and bowl plate	98.4” (2,500 mm)
Weight of scroll with handling hoist and bowl plate	1,872 pounds (850 Kg)

POND DEPTH ADJUSTMENT

Sliding weir plates, range of diameter	11.2” x 16.14” (285 to 410 mm)

WEAR PROTECTION

Inner bowl surface	Integral cylinder and cone grooving
Scroll	Replaceable tungsten carbide tiles the entire length of scroll
Scroll feed chamber (distributor)	Sintered tungsten carbide
Bowl discharge (diffuser)	Sintered tungsten carbide

SEALS

Type	BUNA N
Maximum temperature	176°F (80°C)

LUBRICATION

All bearing blocks are lubricated with grooving

The reducer is lubricated exclusively with the type of grease specified by ANDRITZ

NOISE LEVEL

83 dB(A) sound pressure measured in free field conditions, at nominal speed, from a distance of 39 inches (1 meter).

VIBRATION LEVEL .18 inch/s (4.5 mm/s) max.

(Registered on test bench at nominal speed according ISO 10816-1)

MISCELLANEOUS

Wash water flow rate	44 to 88 GPM (10 to 20 m^3/hr) for up to 45 min. at each stop (Non-potable water supply / 40 to 60 psi (3 to 4 bars))
Air evacuation	200 cfm (350m^3/min)

2.0-B TECHNICAL DATA D5LX CENTRIFUGE

CHARACTERISTICS

Size (L x W x H)	166 x 48 x 69 inch (4,222 x 1,228 x 1757 mm) (without de-aerator) (Anchor bolts not supplied)
Weight with driving system	10,695 pounds (4,857Kg)

DE-AERATOR (CENTRATE CHUTE)

Effluent inlet	Flexible connection supplied (int. diam. 150)
Effluent outlet	ANSI 6 inch
Air outlet	ANSI 8 inch

DRIVE

Main motor (hp)	100
Secondary Motor (hp)	20
Cyclo reducer (gearbox), nominal torque	70,454 inch pounds (7960 N.m)

FREQUENCY INVERTERS

Brand:	Allen Bradley Power Flex Series 755 (6 Pulse)
Communication:	Ethernet

CONTROLS

PLC:	Allen Bradley CompactLogix PLC Processor with Ethernet
Touchscreen:	Allen Bradley Panel View Plus

SCROLL SPEED ADJUSTMENT

Range:	0 - 15 rpm (Redex)
Torque control (dewatering):	based on conveying torque

MATERIAL OF CONSTRUCTION

Wetted parts:	316L Stainless Steel
Frame	Painted Steel
Cover & De-aerator	Fiberglass

BOWL

Inner diameter	20.5” (520 mm)
L/D ratio	3.7
Total length	92” (2340mm)
Speed	3200 rpm
G Force	2976

SCROLL

Counter current design High Performance	
For dismantling purposes:	
Total length of scroll with handling hoist and bowl plate	110” (2,800 mm)
Weight of scroll with handling hoist and bowl plate	1345 pounds (610 Kg)

POND DEPTH ADJUSTMENT

Sliding weir plates, range of diameter	11.2” x 16.1” (285 to 410 mm)

WEAR PROTECTION

Inner bowl surface	Integral cylinder and cone grooving
Scroll	Replaceable tungsten carbide tiles the entire length of scroll
Scroll feed chamber (distributor)	Sintered tungsten carbide
Bowl discharge (diffuser)	Sintered tungsten carbide

SEALS

Type	BUNA N
Maximum temperature	176°F (80°C)

LUBRICATION

All bearing blocks are lubricated with grease.

The reducer is lubricated exclusively with the type of grease specified by ANDRITZ

NOISE LEVEL

85 dB(A) sound pressure measured in free field conditions, at nominal speed, from a distance of 39 inches (1 meter).

VIBRATION LEVEL .18 inch/s (4.5 mm/s) max.

(Registered on test bench at nominal speed according ISO 10816-1)

MISCELLANEOUS

Wash water flow rate	44 to 88 GPM (10 to 20 m^3/hr) for up to 45 min. at each stop (Non-potable water supply / 40 to 60 psi (4 bars))
Air evacuation	200 cfm (350m^3/min)

3.0 CENTRIFUGE FEATURES & BENEFITS

3.1 DECANTER CENTRIFUGE GENERAL CHARACTERISTICS

The ANDRITZ decanter centrifuge is composed of a rotating assembly, driven by electrical motors, supported by two pillow blocks on a base frame. The rotating assembly includes a cylindrical and conical bowl, a scroll conveyor and a gear box, which creates the differential speed between the scroll conveyor and the bowl.

3.2 OPERATING PRINCIPLE

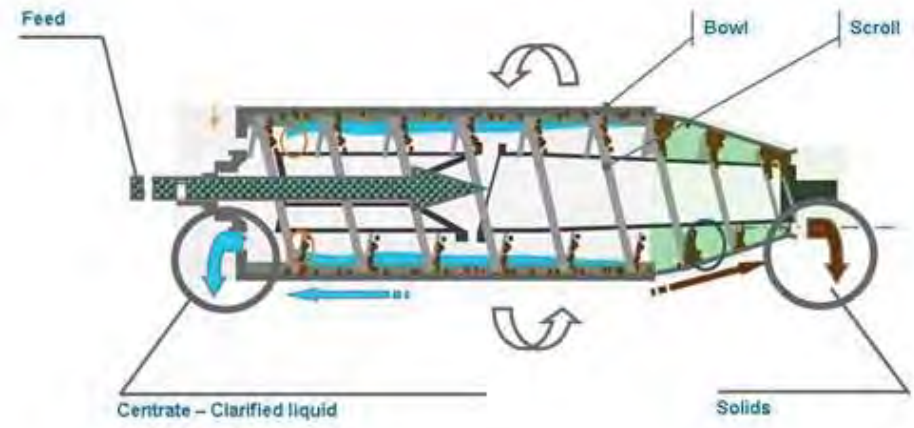

The ANDRITZ decanter is designed for a continuous attention-free operation, through a specific electronic system. The shutdown of the decanter can be programmed outside of the operators' working hours on site and operating 24 hrs. a day is, of course, possible.

3.3 HIGH PERFORMANCE SCROLL

The ANDRITZ High Performance scroll has been designed to increase solids residence time in the process area (to reach lower moisture content) while optimizing the clarified liquid flow, reducing hydraulic turbulences which hinder fines and suspended solids capture.

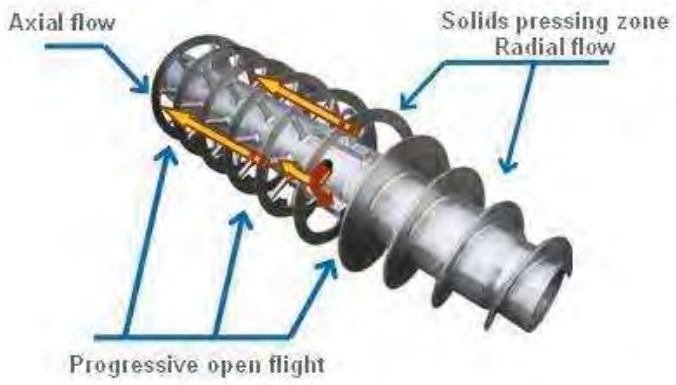

Thanks to the open flight design, the clarified liquid travels axially towards the discharge area over the whole scroll section, instead of being led by a full flight around the scroll hub and in a direction opposite to the scroll displacement.

The low velocities and the laminar characteristics of the flow, drastically reduce the turbulences inside the bowl thus enhancing fine solids capture rate.

3.4 WEAR AND ABRASION PROTECTION

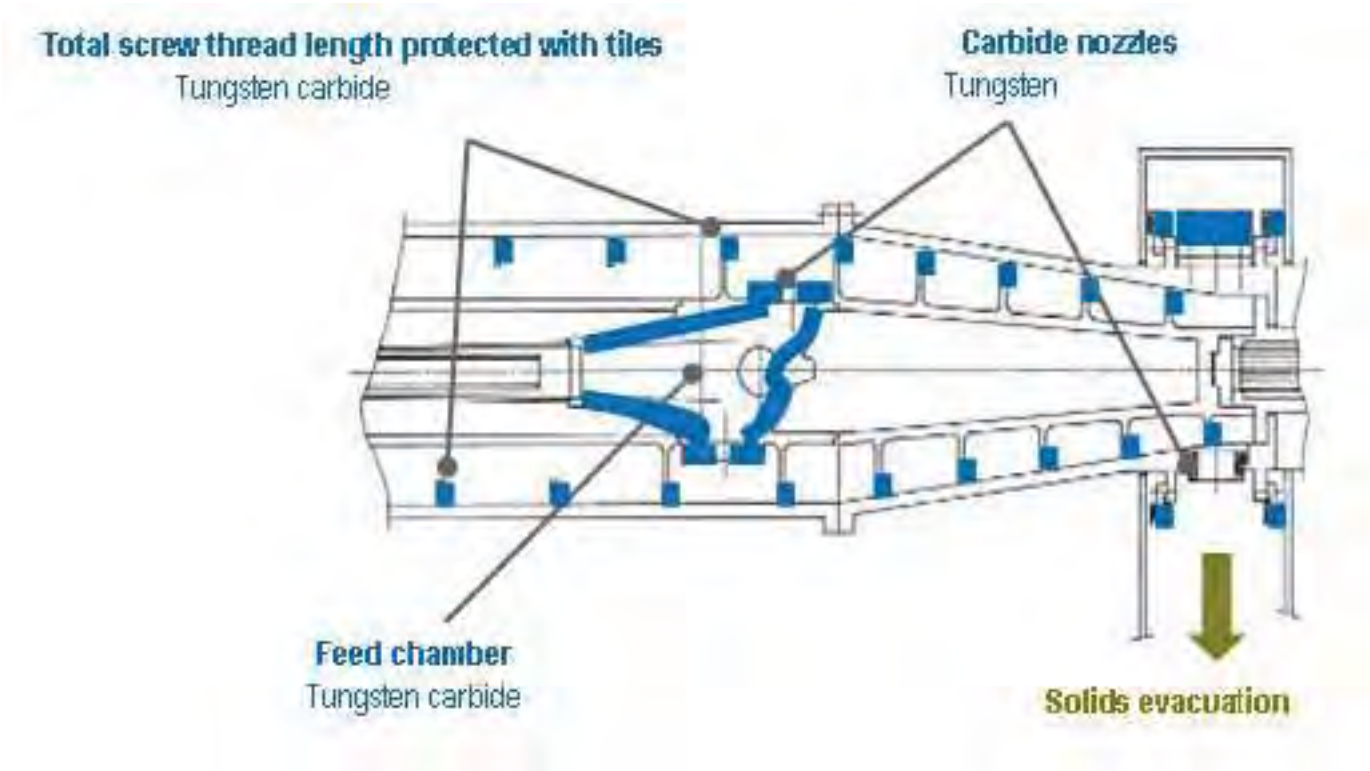

All the rotating assembly parts facing possible abrasion are protected by the most resistant coatings (tungsten carbide, ceramic…)

Field replaceable tungsten carbide tiles the entire length of scroll

Field replaceable tungsten carbide feed ports

Field replaceable tungsten carbide cake discharge ports

3.5 ENERGY RECOVERY SYSTEM

Featured on our High Performance decanter centrifuges, the rotating assembly is driven by a main and a secondary motor. Each motor is controlled by a variable frequency inverter (VFD).

In our protected design, the energy the scroll needs to convey solids is recycled by the inverters. This energy is then fed into the main motor.

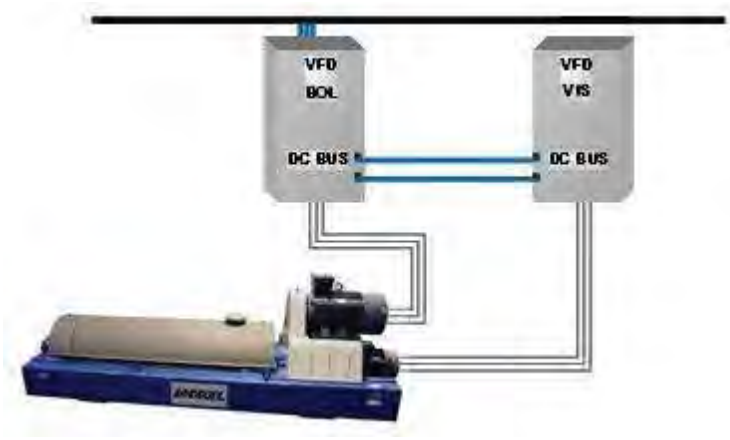

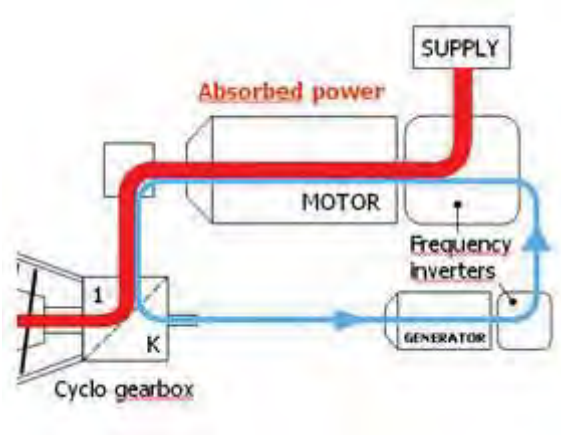

This unique system reduces power consumption up to 25% compared to standard systems.

Scroll speed and bowl speed are independent from each other. Consequently it is possible to adjust separately the G-Force (acceleration) and the solids residence time based on a change of the feed slurry characteristics.

Operator-Friendly Controls

The ANDRITZ centrifuge is designed for continuous, attention-free operation. The advanced centrifuge control system allows full monitoring and adjustments of the system. The start-up and shutdown of the centrifuge can be programmed to occur outside of the operators' working hours and can also allow for 24/7 operation if required.

ANDRITZ supplies a complete control system with touch-screen interface which is capable of controlling the complete dewatering system including centrifuge, polymer system, sludge feed pump, wash-water flow and discharge conveyor. The control system allows for totally automatic operation with operational features including Early Start, Extended Run, Pause & Resume and One Touch. All ANDRITZ centrifuge panels include a modem to assist the customer with remote monitoring, troubleshooting, and software upgrades.

The centrifuge control systems are designed, programmed and assembled in-house in Arlington, Texas, and are not outsourced to third party vendors.

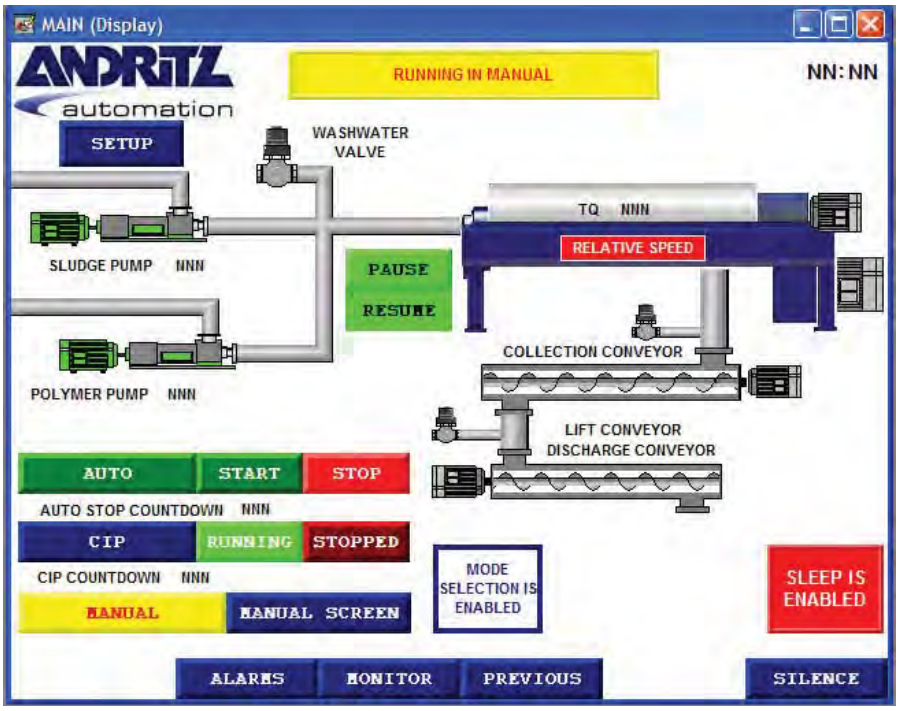
MAIN (Display)
ANDRITZ automation
RUNNING IN MANUAL
NN:NN
SETUP
WASHWATER VALVE
TQ NNN
RELATIVE SPEED
SLUDGE PUMP NNN
PAUSE
RESUME
COLLECTION CONVEYOR
POLYMER PUMP NNN
LIFT CONVEYOR
DISCHARGE CONVEYOR
AUTO
START
STOP
AUTO STOP COUNTDOWN NNN
CIP
RUNNING
STOPPED
CIP COUNTDOWN NNN
MODE SELECTION IS ENABLED
SLEEP IS ENABLED
MANUAL
MANUAL SCREEN
ALARMS
MONITOR
PREVIOUS
SILENCE

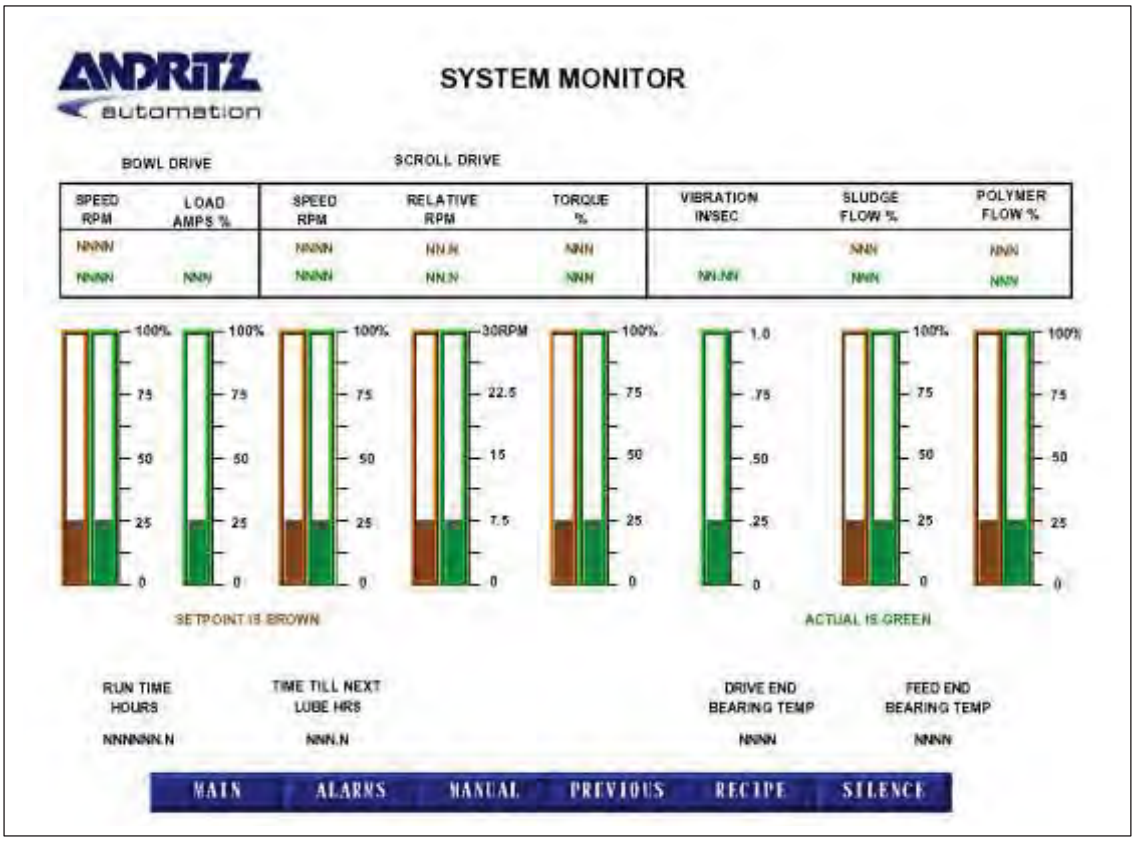
ANDRITZ automation
SYSTEM MONITOR
BOWL DRIVE
SCROLL DRIVE
SPEED RPM
LOAD AMPS %
SPEED RPM
RELATIVE RPM
TORQUE %
VIBRATION IN/SEC
SLUDGE FLOW %
POLYMER FLOW %
NNNN
NNN.N
NNN
NN.NN
100%
75
50
25
0
30RPM
22.5
15
7.5
1.0
.75
.50
.25
SETPOINT IS BROWN
ACTUAL IS GREEN
RUN TIME HOURS
NNNNNN.N
TIME TILL NEXT LUBE HRS
NNN.N
DRIVE END BEARING TEMP
FEED END BEARING TEMP
MAIN
ALARMS
MANUAL
PREVIOUS
RECIPE
SILENCE

3.6 CYCLO-SUMITOMO GEAR BOX

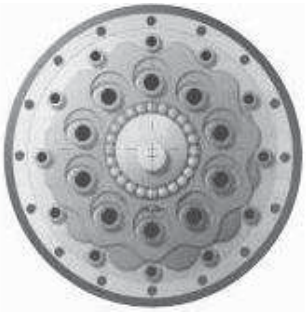

This reducer creates the differential speed between the bowl and the scroll conveyor and bears the torque required to convey the solids out.

CYCLO®-Sumitomo™ reducers are compact and the internal parts do not include planetary satellites. This gearless proprietary design minimize frictions and provides for best efficiencies and torque capacities (able to support up to 500% of its nominal capacity).

The pond depth adjustment inside the bowl is carried out easily without dismantling the machine.

The design of the ANDRITZ decanter is in accordance with European norms and insures perfect safety to the user (full cover).

3.7 INSTALLATION OF THE DECANTER

The IN-LINE design of our ANDRITZ decanter centrifuges reduces the floor-space requirements to a minimum. Its isostatic design decreases vibrations and noise level.

The decanter resting on vibrations shock isolators (included in our scope) is typically installed on concrete supports.

The feed must be regular and homogenous by an adjustable flow rate positive displacement volumetric pump. An industrial water entry for decanter washing must be available (very low washwater consumption and only during the equipment shutdown).

The open solids discharge casing facilitates the installation of any evacuation system. We recommend the

installation of an inclined shaftless screw conveyor with a bottom drain hole for the gravity discharge of the slops at the beginning and the end of each operating cycle.

The de-aerator captures and separates the air dragged with the centrate discharge and allow for its easy evacuation to the outside or any air treatment facility. We recommend the installation of sampling ports for the dewatered solids and centrate.

The power and control panel, in which the frequency inverters (VFD) will be mounted, should be installed in an electrical room with fresh air ventilation, without any contact with the dewatering room, in order to prevent electrical wires and electronic cards corrosion. A local control panel can be installed on a wall near by the decanter if required.

Dismantling and maintenance of the equipment is easy, through the use of a simple monorail, not included in our scope.

4.0 DOCUMENTATION & COMMISSIONING

4.1 TECHNICAL DOCUMENTATION

The Operation and Maintenance Manuals are sent upon delivery of the equipment.
They include among others:
- Instructions regarding installation, automation, commissioning, piloting and maintenance of the equipment
- Part manuals: including drawings with detailed parts number and location for easy service.

4.2 COMMISSIONING

The installation will be carried out and controlled by the customer before arrival of our start-up technician, in accordance with our instructions. Upon his arrival, power, water, and product to be treated and chemical aid products must be available on-site.

As soon as the machine is ready and the sludge available, our technician will come to carry out performance tests and to optimize the operation of the machine. During this commissioning, the personnel on site will be trained to the piloting of the decanter.

A written report will be made before the departure of our technician. In the exceptional case where the commissioning would not be completed, our technician will mention the actions to be carried out to ensure its later completion.

The estimated duration of the commissioning is indicated in the price list. Should we be required to extend our stay on-site because of delays for which we are not responsible, we reserve the right to invoice occurred costs and future costs should other trips be required to complete the commissioning.

5.0 BUDGETARY OFFER

5.1 PRICING SUMMARY D5L CENTRIFUGE

Item	Qty.	Description	Unit Price (Taxes Not included) USD	Total Price (Taxes not included) USD
1	1 ea.	**ANDRITZ 5LDecanter Centrifuge, including**: • 316L stainless steel solid bowl with machined internal grooves • 316L stainless steel HP Scroll conveyor • 316L Stainless steel wetted parts • Field replaceable tungsten carbide tiles over the entire length of scroll • Field-replaceable tungsten carbide feed ports • Field-replaceable tungsten carbide discharge ports • Fiberglass (FRP) noise hood and drive guard • Power regeneration drive system • In-line drives providing space saving advantages • Easy scroll removal without removing bowl or drives • In-line one-stage cyclo speed inducer • Bearings are L-10 for over 100,000 hours • Vibration Isolators • Flexible connectors for sludge feed, centrate discharge and solids discharge	Included	Included
2	1 ea.	**Centrifuge Control Panel (CCP)** • NEMA 4X, 304 stainless steel enclosure, UL508A/CSA listed • Allen Bradley PanelView Plus OIT touch screen • Allen Bradley CompactLogix PLC Processor w/Ethernet • Allen Bradley Power Flex Series 755 (6 Pulse) Variable Frequency Drive • DC Buss fuses for VFD's • Main power disconnect switch • Control voltage transformer • Automatic torque control operation	Included	Included

Item	Qty.	Description	Unit Price (Taxes Not included) USD	Total Price (Taxes not included) USD
		• Automatic clean-in-place		
3	1 lot	**Standard Tools Included with Equipment Supply** • As listed in ANDRITZ D5L Specification.	Included	Included
4	1 lot	**Supplied Spare Parts** • As listed in the Andritz D5L Specification	Included	Included
5	1 lot	**Engineering and Documentation** ANDRITZ will supply the following documents (one e-copy and 3 hard copies): • Arrangement drawings with dimensions for the ANDRITZ scope • Motor list • Written sequence of operation including all interlocks • Control panel layout • Electrical drawings • Mechanical drawings • Terminal box details • Installation, operating and maintenance manuals • Factory load tested	Included	Included
6	1 lot	**Freight to jobsite**	Included	Included
7	1 trip	**Site Supervision and Training** • One trip for 5 days on site for installation checkout, start-up assistance and operator training	Included	Included
TOTAL PRICE FOR One (1) D5L Centrifuge			$ 339,000.00	$ 339,000.00

5.2 EXCLUDED FROM ANDRITZ SCOPE OF SUPPLY

The ANDRITZ scope of supply does not include the following items as may be necessary for equipment installation & operation to the performance levels specified:

- Civil and structural engineering work.
- Building and building plans (ANDRITZ will furnish load data and layout drawings but is not responsible for updating of building or building plans)
- Building modifications
- Platforms and access stairs or ladders
- All utilities required for operation and erection
- Unloading at site (by others)
- Cranes or other lifting devices to install equipment
- Other instruments not specified in our scope of supply / outside of panel
- Polymer feed system
- Flow Meters
- Sludge Grinder
- Wash water booster pump
- Cake Discharge Pumps
- Centrate Discharge Pump
- Polymer
- Lubricants

6.0 COMMERCIAL SUMMARY

6.1 GENERAL COMMERCIAL TERMS

Terms and Conditions

This proposal is based on the attached ANDRITZ Separation "Standard Terms and Conditions of Sale".

Special Provisions

- All prices quoted in US Dollars,
- Pricing quoted is FOB Jobsite, and does not include unloading.
- Pricing does not include any local, state or federal taxes, permits, duties or other fees. Any taxes or fees that may apply must be added to the quoted price and paid by the buyer. Bonding is not included.

Validity

Budget quotation is valid for a period of ninety (90) days.

Terms of Payment

ANDRITZ Separation agrees to the following payment terms (on a net 30 day basis):

- 30% of Order Value upon submittal of Approval Drawings
- 60% of Order Value upon Shipment
- 10% of Order Value upon Startup, not to exceed 120 days from Shipment

Delivery

Approval Drawings will be submitted 6 - 8 weeks after written acceptance of Order.
Equipment delivery will be 20 - 24 weeks from receipt of written Approved Submittals.

Field Service

This Installation checkout, startup and training services by a qualified ANDRITZ Service Technician have been included in this proposal for one trip with up to 5 days on site.

ANDRITZ will provide additional erection and start-up supervision for $1,500.00 per day plus expenses, eight (8) hours/day. At the request of the Purchaser, overtime service will be provided at a rate of 1.5 times quoted rates for weekdays and 2.0 times quoted rates for weekends. Expenses are defined as the cost of travel from Seller's plant to the point of installation and return, together will all living expenses during the period of service.

The above charges shall be made for time involved including delays which are beyond the Seller's control.

7.0 STANDARD TERMS AND CONDITIONS OF SALE

1. TERMS APPLICABLE

The Terms and Conditions of Sale listed below are the exclusive terms and conditions applicable to quotations made and orders acknowledged by the ANDRITZ entity supplying the same ("Seller") for the sales of products, equipment and parts relating thereto ("Products"). If this quotation or acknowledgment contains terms additional to or different from those offered by Buyer, then any acceptance by Seller is expressly made conditional upon Buyer's assent to such additional or different terms. Any of Buyer's terms and conditions that are in addition to or different from those contained herein, which are not separately agreed to by Seller in writing, are hereby objected to and shall be of no effect. [The term "this Agreement" as used herein means this quotation or acknowledgment or purchase order, together with any attachment hereto, any documents expressly incorporated by reference and these Terms and Conditions of Sale.

2. DELIVERY

Delivery dates are good faith estimates and do not mean that "time is of the essence." Buyer's failure to promptly make advance or interim payments, supply technical information, drawings and approvals will result in a commensurate delay in delivery. Upon and after delivery, risk of loss or damage to the Products shall be Buyer's. Delivery of the Products hereunder will be made on the terms agreed to by the parties as set forth in this Agreement, according to INCOTERMS 2010.

3. WARRANTY

(a) Seller warrants to Buyer that the Products manufactured by it will be delivered free from defects in material and workmanship. This warranty shall commence upon delivery of the Products and shall expire on the earlier to occur of 12 months from initial operation of the Products and 18 months from delivery thereof (the "Warranty Period"). If during the Warranty Period Buyer discovers a defect in material or workmanship of a Product and gives Seller written notice thereof within 10 days of such discovery, Seller will, at its option, either deliver to Buyer, on the same terms as the original delivery was made, according to INCOTERMS 2010, a replacement part or repair the defect in place. Any repair or replacement part furnish pursuant to this warranty are warranted against defects in material and workmanship for one period of 12 months from completion of such repair or replacement, with no further extension. Seller will have no warranty obligations for the Products under this paragraph 3(a): (i) if the Products have not been operated and maintained in accordance with generally approved industry practice and with Seller's specific written instructions; (ii) if the Products are used in connection with any mixture or substance or operating condition other than that for which they were designed; (iii) if Buyer fails to give Seller such written 10 day notice; (iv) if the Products are repaired by someone other than Seller or have been intentionally or accidentally damaged; (v) for corrosion, erosion, ordinary wear and tear or in respect of any parts which by their nature are exposed to severe wear and tear or are considered expendable; or (vi) for expenses incurred for work in connection with the removal of the defective articles and reinstallation following repair or replacement.

(b) Seller further warrants to Buyer that at delivery, the Products manufactured by it will be free of any liens or encumbrances. If there are any such liens or encumbrances, Seller will cause them to be discharged promptly after notification from Buyer of their existence.

(c) THE EXPRESS WARRANTIES SELLER MAKES IN THIS PARAGRAPH 3 ARE THE ONLY WARRANTIES IT WILL MAKE. THERE ARE NO OTHER WARRANTIES, WHETHER STATUTORY, ORAL, EXPRESS OR IMPLIED. IN PARTICULAR, THERE ARE NO IMPLIED WARRANTIES OF MERCHANTABILITY OR FITNESS FOR A PARTICULAR PURPOSE.

(d) The remedies provided in paragraphs 3(a) and 3(b) are Buyer's exclusive remedy for breach of warranty.

(e) With respect to any Product or part thereof not manufactured by Seller, Seller shall pass on to Buyer only those warranties made to Seller by the manufacturer of such Product or part which are capable of being so passed on.

4. LIMITATION OF LIABILITY

Notwithstanding any other provision in this Agreement, the following limitations of liability shall apply:

(a) In no event, whether based on contract, tort (including negligence), strict liability or otherwise, shall Seller, its officers, directors, employees, subcontractors, suppliers or affiliated companies be liable to Buyer or any third party for loss of profits, revenue or business opportunity, loss by reason of shutdown of facilities or inability to operate any facility at full capacity, or cost of obtaining other means for performing the functions performed by the Products, loss of future contracts, claims of customers, cost of money or loss of use of capital, in each case whether or not foreseeable, or for any indirect, special, incidental or consequential damages of any nature.

(b) The aggregate liability of Seller, its officers, directors, employees, subcontractors, suppliers or affiliated companies, for all claims of any kind for any loss, damage, or expense resulting from, arising out of or connected with the Products or this Agreement or from the performance or breach thereof, together with the cost of performing make good obligations to pass performance tests, if applicable, shall in no event exceed the contract price. The foregoing notwithstanding, Seller's aggregate liability for any claims for (a) delay in delivery shall not exceed 5% and (b) failure to achieve performance requirements, shall not exceed 15% of the contract price.

(c) The limitations and exclusions of liability set forth in this paragraph 4 shall take precedence over any other provision of this Agreement and shall apply whether the claim of liability is based on contract, warranty, tort (including negligence), strict liability, indemnity, or otherwise. The remedies provided in this Agreement are Buyer's exclusive remedies.

(d) All liability of Seller, its officers, directors, employees, subcontractors, suppliers or affiliated companies, resulting from, arising out of or connected with the Products or this Agreement or from the performance or breach thereof shall terminate on the third anniversary of the date of this Agreement.

5. CHANGES, DELETIONS AND EXTRA WORK

Seller will not make changes in the Products unless Buyer and Seller have executed a written Change Order for such change. Any such Change Order will include an appropriate adjustment to the contract price and delivery terms. If the change impairs Seller's ability to satisfy any of its obligations to Buyer, the Change Order will include appropriate modifications to this Agreement. If, after the date of this quotation or acknowledgment, new or revised governmental requirements should require a change in the Products, the change will be subject to this paragraph 5.

6. TAXES

Seller's prices do not include any sales, use, excise or other taxes. In addition to the price specified herein, the amount of any present or future sales, use, excise or other tax applicable to the sale or use of the Products shall be billed to and paid by Buyer unless Buyer provides to Seller a tax-exemption certificate acceptable to the relevant taxing authorities.

7. SECURITY INTEREST

Seller shall retain a purchase money security interest and Buyer hereby grants Seller a lien upon and security interest in the Products until all payments hereunder have been made in full. Buyer acknowledges that Seller may file a financing statement or comparable document as required by applicable law and may take all other action it deems reasonably necessary to perfect and maintain such security interest in Seller and to protect Seller's interest in the Products.

8. SET OFF

Neither Buyer nor any of its affiliates shall have any right to set off claims against Seller or any of its affiliates for amounts owed under this Agreement or otherwise.

9. PATENTS

Unless the Products or any part thereof are designed to Buyer's specifications and provided the Product or any part thereof is not used in any manner other than as specified or approved by Seller in writing, (i) Seller shall defend against any suit or proceeding brought against Buyer to the extent based on a claim that any Product, or any part thereof, infringes any United States device patent; provided Seller is notified promptly in writing and given the necessary authority, information and assistance for the defense of such suit or proceeding; (ii) Seller shall satisfy any judgment for damages entered against Buyer in such suit; and (iii) if such judgment enjoins Buyer from using any product or a part thereof, then Seller shall, at its option: (a) obtain for Buyer the right to continue using such Product or part; (b) eliminate the infringement by replacing or modifying all or part of the Products; or (c) take back such Product or part and refund to Buyer all payments on the purchase price which Seller has received, in which case neither Buyer nor Seller will have any claim against the other under this Agreement or arising out of the subject matter of this Agreement. The foregoing states Seller's entire liability for patent infringement by any Product or part thereof.

10. SOFTWARE LICENSE, WARRANTY, FEES

The following Software Terms and Conditions apply to any software furnished by Seller, whether separately packaged or embedded in the Products furnished by Seller hereunder:

(a) Seller hereby grants to Buyer: a non-exclusive, non-transferable license to use any computer software delivered to Buyer under this Agreement in machine-readable, object code form and any modifications made by Seller thereto ("Software"), but only in connection with the configuration of the Products and operating system for which the Software is ordered and for the end-use purpose stated in the related Seller operating documentation. Buyer agrees that neither it nor any third party shall modify, reverse engineer, decompile or reproduce the Software, without Seller's prior written consent, except for making a single copy for backup or archival purposes in accordance with the related Seller operating documentation, and provided that Seller's confidential and proprietary legend is included. Except to the extent that the parties otherwise agree in writing, Buyer's license to use the copy of such Software shall terminate upon breach of this license or Agreement by Buyer, including, without limitation, breach of payment or confidentiality obligations. All copies of the Software are the property of Seller, and all copies for which the license is terminated shall be returned to Seller promptly after termination.

(b) Buyer may not transfer this software license and warranty to a third party without Seller's previous written consent, signed by a Seller authorized representative.

(c) Seller warrants that on the date of shipment of the Software only to Buyer or Buyer's Seller-authorized transferee hereunder that: (1) the Software media contain a true and correct copy of the Software and are free from material defects; (2) Seller has the right to grant the license hereunder; and (3) the Software will function substantially in accordance with the related Seller operating documentation. Seller disclaims any warranty that the operation of the Software will be uninterrupted or error free. This warranty does not apply to software delivered by Seller but produced by others. The warranty for software produced by others shall be the warranty as stated by the software producer.

(d) If within six months (6) months from date of initial installation (but not more than one year from date of shipment by Seller to Buyer) of Software, Buyer discovers that the Software is not as warranted above and promptly notifies Seller in writing, within this period of time, of the nonconformity, and if Seller cannot correct the nonconformity or deems correction to be commercially impracticable or prohibitively expensive, Buyer's and Buyer's Seller-authorized transferee's exclusive remedies, at Seller's option and expense, are: (1) replacement of the nonconforming Software; or (2) termination of this license and a refund of an equitable, pro rata share of the contract price or license fee paid.

(e) If any infringement and trade secret claims are made against Buyer based on the Buyer's use of the Software in a manner specified or approved by Seller, Seller shall: (i) defend against any suit or proceeding brought by an unaffiliated third party against Buyer to the extent the suit or proceeding is based on a claim that the Software or that the specified or approved use of the Software infringes a United States patent, a copyright or violates a trade secret agreement in which Seller was a party and provided that Seller is notified promptly in writing and given the necessary authority, information and assistance for the defense and settlement of such suit or proceeding (including the sole authority to select counsel and remove the Software or stop accused infringing usage); (ii) Seller shall satisfy any settlement or final judgment (after any appeals) for damages entered against Buyer in such suit; and (iii) if such settlement prohibits or judgment enjoins Buyer from using the Software, Seller shall at its option: (a) obtain for Buyer the right to continue using such Software; (b) eliminate the infringement by replacing or modifying the Software, or (c) take back such Software and refund to Buyer all payments on the purchase price which Seller has received, in which case neither Buyer nor Seller will have any claim against the other under this Agreement or arising out of the subject matter of this Agreement. However, Seller's obligations with respect to infringement and trade secret claims will not apply to the extent that the claim or adverse final judgment is based on: (1) Buyer's running of the Software after being notified to discontinue running due to such a claim; (2) the combination of the Software with a non-Seller software, product, data or process; (3) damages attributable to the value of the use of a non-Seller software, product, data, or process; (4) Buyer's alteration of the Software; (5) Buyer's distributed the Software to, or its use for the benefit of, any third party; or (6) Buyer's acquiring a trade secret (a) through improper means; (b) under circumstances giving rise to a duty to maintain its secrecy or limit its use; or (c) from a person (other than Seller) who owed to the party asserting the claim a duty to maintain the secrecy or limit the use of the trade secret. Buyer will reimburse Seller for any costs or damages that result from these actions 1 to 6. If Seller receives information about an infringement claim related to the Software, Seller may do any of the following, at its expense and without obligation to do so: (i) procure the right to continue use of the Software, (ii) replace the Software with a functional equivalent and (iii) modify the Software to make it non-infringing (including disabling the challenged functionality and under circumstances (ii) and (iii) Buyer will stop running the allegedly infringing software immediately).

(f) This warranty will apply for the period specified in (d) above, provided that: (1) the Software is not modified, changed, or altered by anyone other than Seller or its suppliers, unless authorized by Seller in writing; (2) there is no change by anyone other than Seller to the goods for which the Software is ordered; (3) the goods are in good operating order and are installed in a suitable operating environment; (4) the nonconformity is not caused by Buyer or any of their agents, servants, employees, or contractors, or any third party; (5) Buyer promptly notifies Seller in writing, within the period of time set forth in (d) above, of the nonconformity after it is discovered; and (6) all fees for the Software due to Seller have been paid. SELLER HEREBY DISCLAIMS ALL OTHER WARRANTIES, EXPRESS OR IMPLIED, WITH REGARD TO THE SOFTWARE, INCLUDING BUT NOT LIMITED TO IMPLIED WARRANTIES OF MERCHANTABILITY, FITNESS FOR A PARTICULAR PURPOSE, COURSE OF DEALING AND USAGE OF TRADE.

(g) Buyer and successors of Buyer are limited to the remedies specified in this paragraph 10 and shall have no others for a nonconformity in the Software. Buyer agrees that these remedies provide Buyer and its successors with a minimum adequate remedy and are their exclusive remedies, whether Buyer's or successors' remedies are based on contract, warranty, tort (including negligence), strict liability, indemnity, or any other legal theory, and whether arising out of warranties, representations, instructions, operating documentation, installations, or non-conformities from any cause.

(h) Unless otherwise provided in this Agreement, the fees for this Software license are included in the purchase price of the Products. Any subsequent modifications or enhancements to the Software made by Seller are, at Seller's option, subject to a fee.

11. TERMINATION

Buyer may only terminate its order upon written notice to Seller and upon payment to Seller of Seller's termination charges, which shall be specified to Buyer and shall take into account among other things expenses (direct and indirect) incurred and commitments already made by Seller and an appropriate profit; provided, that in no event shall Seller's termination charges be less than 25% of the contract price. Seller shall have the right to suspend and/or terminate its obligations under this Agreement if payment is not received within 30 days of due date. In the event of the bankruptcy or insolvency of Buyer or in the event of any bankruptcy or insolvency proceeding brought by or

against Buyer, Seller shall be entitled to terminate any order outstanding at any time during the period allowed for filing claims against the estate and shall receive reimbursement for its cancellation charges.

12. CONFIDENTIALITY

Buyer acknowledges that the information which Seller submits to Buyer in connection with this quotation, acknowledgment or performance of this Agreement includes Seller's confidential and proprietary information, both of a technical and commercial nature. Buyer agrees not to disclose such information to third parties without Seller's prior written consent. Seller grants to Buyer a non-exclusive, royalty-free, perpetual license to use Seller's confidential and proprietary information for purposes of this Agreement and the Products that are the subject hereof only. Buyer further agrees not to permit any third party to fabricate the Products or any parts thereof from Seller's drawings or to use the drawings other than in connection with this Agreement. Buyer will defend and indemnify Seller from any claim, suit or liability based on personal injury (including death) or property damage related to any Product or part thereof which is fabricated by a third party without Seller's prior written consent and from and against related costs, charges and expenses (including attorneys fees). All copies of Seller's drawings shall remain Seller's property and may be reclaimed by Seller at any time.

13. END USER

If Buyer is not the end user of the Products sold hereunder (the "End User"), then Buyer will use its best efforts to obtain the End User's written consent to be bound to Seller by the provisions hereof. If Buyer does not obtain such End User's consent, Buyer shall defend and indemnify Seller and Seller's agents, employees, subcontractors and suppliers from any action, liability, cost, loss, or expense for which Seller would not have been liable or from which Seller would have been indemnified if Buyer had obtained such End User's consent.

14. FORCE MAJEURE

(a) Force Majeure Defined. For the purpose of this Agreement "Force Majeure" will mean all unforeseeable events, beyond the reasonable control of either party which affect the performance of this Agreement, including, without limitation, acts of God, acts or advisories of governmental or quasi-governmental authorities, laws or regulations, strikes, lockouts or other industrial disturbances, acts of public enemy, wars, insurrections, riots, epidemics, pandemics, outbreaks of infectious disease or other threats to public health, lightning, earthquakes, fires, storms, severe weather, floods, sabotage, delays in transportation, rejection of main forgings and castings, lack of available shipping by land, sea or air, lack of dock lighterage or loading or unloading facilities, inability to obtain labor or materials from usual sources, serious accidents involving the work of suppliers or sub-suppliers, thefts and explosions.

(b) Suspension of Obligations. If either Buyer or Seller is unable to carry out its obligations under this Agreement due to Force Majeure, other than the obligation to make payments due hereunder, and the party affected promptly notifies the other of such delay, then all obligations that are affected by Force Majeure will be suspended or reduced for the period of Force Majeure and for such additional time as is required to resume the performance of its obligations, and the delivery schedule will be adjusted to account for the delay.

(c) Option to Terminate. If the period of suspension or reduction of operations will extend for more than four (4) consecutive months or periods of suspension or reduction total more than six (6) months in any twelve (12) month period, then either Buyer or Seller may terminate this Agreement.

15. INDEMNIFICATION AND INSURANCE

(a) Indemnification. Seller agrees to defend and indemnify Buyer from and against any third-party claim for bodily injury or physical property damage ("Loss") arising in connection with the Products provided by Seller hereunder or the work performed by Seller hereunder, but only to the extent such Loss has been caused by the negligence, willful misconduct or other legal fault ("Fault") of Seller. Buyer shall promptly tender the defense of any such third-party claim to Seller. Seller shall be entitled to control the defense and resolution of such claim, provided that Buyer shall be entitled to be represented in the matter by counsel of its choosing at Buyer's sole expense. Where such Loss results from the Fault of both Seller and Buyer or a third party, then Seller's defense and indemnity obligation shall be limited to the proportion of the Loss that Seller's Fault bears to the total Fault.

(b) Insurance. Seller shall maintain commercial general liability insurance with limits of not less than $2,000,000 per occurrence and in the aggregate covering claims for bodily injury (including death) and physical property damage arising out of the Products. Seller will provide a Certificate of Insurance certifying the existence of such coverages upon request.

16. GENERAL

(a) Seller represents that any Products or parts thereof manufactured by Seller will be produced in compliance with all applicable federal, state and local laws applicable to their manufacture and in accordance with Seller's engineering standards. Seller shall not be liable for failure of the Products to comply with any other specifications, standards, laws or regulations.

(b) This Agreement shall inure only to the benefit of Buyer and Seller and their respective successors and assigns. Any assignment of this Agreement or any of the rights or obligations hereunder, by either party without the written consent of the other party shall be void.

(c) This Agreement contains the entire and only agreement between the parties with respect to the subject matter hereof and supersedes all prior oral and written
understandings between Buyer and Seller concerning the Products and any prior course of dealings or usage of the trade not expressly incorporated herein.

(d) This Agreement may be modified, supplemented or amended only by a writing signed by an authorized representative of Seller. Seller's waiver of any breach by Buyer of any terms of this Agreement must also be in writing and any waiver by Seller or failure by Seller to enforce any of the terms and conditions of this Agreement at any time, shall not affect, limit or waive Seller's right thereafter to enforce and compel strict compliance with every term and condition thereof.

(e) (i) If the Products are delivered or performed in the United States, this Agreement and the performance thereof will be governed by and construed according to the laws of the State of Georgia.

(ii) In the circumstances of (i) above, any controversy or claim arising out of or relating to this Agreement, or the breach thereof, or to the Products provided pursuant hereto, shall be definitively settled by arbitration, to the exclusion of courts of law, administered by the American Arbitration Association ("AAA") in accordance with its Construction Industry Arbitration Rules in force at the time this Agreement is signed and to which the parties declare they will adhere (the "AAA Rules"), and judgment on the award rendered by the arbitrator(s) may be entered in any court having jurisdiction over the party against whom enforcement is sought or having jurisdiction over any of such party's assets. The arbitration shall be conducted in Atlanta, Georgia by a panel of three members, one of whom will be appointed by each of Buyer and Seller and the third of whom will be the chairman of the panel and will be appointed by mutual agreement of the two party-appointed arbitrators. All arbitrators must be persons who are not employees, agents, or former employees or agents of either party. In the event of failure of the two party-appointed arbitrators to agree within forty-five (45) days after submission of the dispute to arbitration upon the appointment of the third arbitrator, the third arbitrator will be appointed by the AAA in accordance with the AAA Rules. In the event that either of Buyer or Seller fails to appoint an arbitrator within thirty (30) days after submission of the dispute to arbitration, such arbitrator, as well as the third arbitrator, will be appointed by the AAA in accordance with the AAA Rules.

(f) (i) If the Products are delivered or performed in Canada, this Agreement and the performance thereof will be governed by and construed according to the laws of the Province of New Brunswick.

(ii) In the circumstances of (i) above, any controversy or claim arising out of or relating to this Agreement, or the breach thereof, or to the Products provided pursuant hereto, shall be definitively settled under the auspices of the Canadian Commercial Arbitration Centre ("CCAC"), by means of arbitration and to the exclusion of courts of law, in accordance with its General Commercial Arbitration Rules in force at the time the Agreement is signed and to which the parties declare they will adhere (the "CCAC Rules"), and judgment on the award rendered by the arbitrator(s) may be entered in any court having jurisdiction over the party against whom enforcement is sought or having jurisdiction over any of such party's assets. The arbitration shall be conducted in Saint John, New Brunswick by a panel of three arbitrators, one of whom will be appointed by each of Buyer and Seller and the third of whom will be the chairman of the arbitral tribunal and will be appointed by mutual agreement of the two party-appointed arbitrators. All arbitrators must be persons who are not employees, agents, or former employees or agents of either party. In the event of failure of the two party-appointed arbitrators to agree within forty-five (45) days after submission of the dispute to arbitration upon the appointment of the third arbitrator, the third arbitrator will be appointed by the CCAC in accordance with the CCAC Rules. In the event that either of Buyer or Seller fails to appoint an arbitrator within thirty (30) days after submission of the dispute to arbitration, such arbitrator, as well as the third arbitrator, will be appointed by the CCAC in accordance with the CCAC Rules.

(g) The parties hereto have required that this Agreement be drawn up in English. Les parties aux présentes ont exigé que la présente convention soit rédigée en anglais.

Jan 2013 Rev.

Attachment C: BDP Industries, Inc.

354 State Route 29, Greenwich, New York 12834
Phone No 518-695-6851
E-mail: aj@bdpindustries.com

Date: Monday, November 11, 2013

Attn: **John Bratby, PhD, P.E.**
Vice President
Mobile: 303-239-5452
E-mail: JBratby@brwncald.com

Re: Betasso Colorado WTP: Sludge Dewatering Belt Filter Press System

The process parameters provided indicate the requirement to thicken and dewater 3,400lb/day, peak flow, of water treatment sludge. The waste load is to be processed in 5days/week, 7 hrs. /day. The feed solids are expected to vary from 0.2% to 1.5%. This indicates the unit must have a dry solids capacity of 595lb/hr. The test results indicated a conservative belt press design is 500lb/hr. Therefore BDP recommends a 1.5 meter model 3DP. This unit would have a capacity of 750lb/hr and would dewater the 3,400lb/day in 32hrs/week.

For thickening the same capacity is required in dry lb/day but because of the dilute feed the solids loading must be lower, based extrapolation of the test results, to 410lb/hr,m. A 1.5 meter BDP Industries unit would have a capacity of 610lb/hr and would thicken the peak load in around 39hrs/week. This is adequate and therefore is recommended.

The company's model 3DP Belt Press is designed around an independent gravity zone, see diagram below:

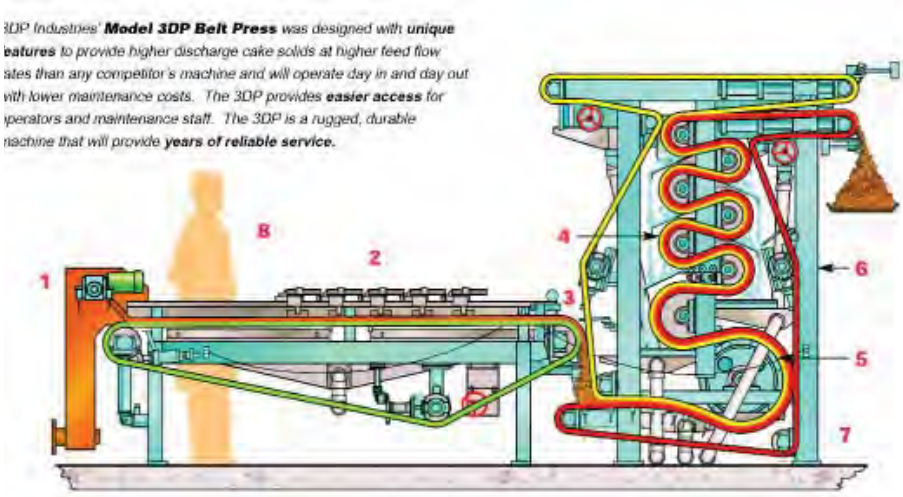

Therefore a 1.5 meter Gravity Belt Thickener can be converted into a Belt Press by simply adding the pressure zone at a later date.

354 State Route 29, Greenwich, New York 12834
Phone No 518-695-6851
E-mail: aj@bdpindustries.com

Therefore in phase 1 where the sludge is thickened only a 1.5 meter Gravity Belt Thickener can be installed with provisions to add the pressure zone at a later date, in order to convert to a belt press.

Below is a summary of our scope of work and pricing for a 1.5 meter Gravity Belt Thickener, 1.5 meter Pressure Zone to convert to a Belt Press and a 1.5 meter model 3DP Belt Press, so as to cover the three options.

EQUIPMENT DESCRIPTION

1.5 meter Gravity Belt Thickener:

One (1) BDP Industries 1.5 meter Gravity Belt Thickeners, equipped to thicken secondary biological waste activated sludge. The equipment package includes complete Gravity Belt Thickeners and appurtenant equipment described as follows:

1. One (1) 316L stainless steel polymer injection and polymer/sludge mixing system consisting of an injection ring, variable vortex mixer, and reducing fittings.

2. One (1) 1.5.0 meter effective width Gravity Belt Thickener with the following design features:

    a.) Tubular frame
    b.) Machined bearing pads.
    c.) Up-flow, feedbox constructed of stainless steel.
    d.) 16ft long gravity zone providing 80ft2 overall filtration area.
    e.) Eight (8) rows of adjustable, furrowing plows.
    f.) Nylon covered rollers.
    g.) 316 stainless steel wetted parts.
    h.) 316 stainless steel hardware
    i.) Hydraulic tensioning and tracking.
    j.) Composite cylinders with 316 stainless steel rod and hardware.
    k.) Self-cleaning, adjustable angle belt showers.
    l.) Dodge split case housing spherical bearings rated for 500,000 hours at 50 PLI.
    m.) Nylon coated bearings with 316 stainless steel hardware.
    n.) TEFC variable speed motors.
    o.) PVC Coated Rigid Conduit.

3. One (1) 1 HP hydraulic unit with 20 gallon 304 stainless steel reservoir.

4. One (1) Gould's model 3565 centrifugal wash water booster pump with 5 hp TECF motor.

354 State Route 29, Greenwich, New York 12834
Phone No 518-695-6851
E-mail: aj@bdpindustries.com

5. One (1) complete 316 stainless steel NEMA 4X, electrical control panel, for all Gravity Belt Thickener control functions and drives. The control panel shall include Allen Bradley Power Flex series variable frequency drives, Allen Bradley Panel View Plus OIT and Allen Bradley Compact Logix PLC controls. The VFDs for the sludge pumps will be supplied by others..

6. Start-up, mechanical checkout and operator training, including performance test, a total of eleven (7) days on site, two trips to site.

7. Freight to job site.

Each Gravity Belt Thickener will come completely factory-assembled, tested and will be shipped fully assembled. The polymer injection devices, hydraulic unit, belt media, booster pump, and electrical control panel will be packed separately. This quotation is for furnishing equipment only and does not include any other installation labor or field services other than checkout, start up and testing services as listed above. All installation, on-site assembly, anchorage, pads and other work required to facilitate the setting of the equipment is to be by others. All material and labor for interconnecting between the GBT and the auxiliary equipment is to be completed by others.

1.5 meter Model 3DP Belt Press:

The 3DP equipment package includes one complete belt filter press and appurtenant equipment described as follows:

8. One (1) 316L stainless steel polymer injection and polymer/sludge mixing systems consisting of an injection ring, variable vortex mixer and reducing fittings.

9. One (1) 1.5 meter 3DP, **3-belt,** belt filter press with the following design features:
   - p.) Hot dipped galvanized frame per **ASTM A123**.
   - q.) Frame safety factor of 10.
   - r.) Polyurethane clear coat on gravity zone slide decks and wedge zone.
   - s.) Machined bearing pads.
   - t.) Up-flow feedbox.
   - u.) Variable speed paddle distributor wheel for feedbox.
   - v.) Eight foot **independent**, variable speed gravity section at operator level.
   - w.) ¼” x 3” stainless steel gravity deck support spaced every 6 inches.
   - x.) Six (6) rows of adjustable, furrowing plows with hot dipped galvanized steel support bars.

354 State Route 29, Greenwich, New York 12834
Phone No 518-695-6851
E-mail: aj@bdpindustries.com

y.) Curved wedge section.

z.) 304L stainless steel, 24” diameter, perforated roller.

aa.) Eight s-wrap pressure section.

bb.) UHMW scraper blades.

cc.) Nylon covered rollers.

dd.) 304 stainless steel wetted parts.

ee.) 304 stainless steel hardware.

ff.) 50 PLI hydraulic tensioning and tracking.

gg.) Stainless steel Rack and Pinion tensioning in the pressure section.

hh.) Corrosion resistant composite cylinders with 316 stainless steel rods and stainless steel hardware.

ii.) Self-cleaning, adjustable angle belt showers with Victualic connections.

jj.) Dodge, closed end, split case bearings rated for 1,000,000 hours at 50 PLI at 15 ft/min.

kk.) TEFC, IP 65 severe duty variable speed motors.

ll.) PVC conduit.

mm.) Zero speed switches for the gravity and press belts.

nn.) NEMA 4X low voltage junction boxes.

oo.) Main incoming power to the control panel is 460 volt, 3 phase, 60 hertz.

10. One (1) complete NEMA 4X, wall mount, 304 stainless steel, NEMA 4X, electrical control panels for all the dewatering system control functions and drives. The PLC based panels shall contain all interlocks and controls for the belt press, polymer systems, sludge pumps, booster pumps, hydraulic units, discharge conveyors, and press mounted drives. The control panel shall include Allen Bradley Power Flex series variable frequency drives, Allen Bradley Panel View Plus OIT and Allen Bradley Compact Logix PLC controls. The VFDs for the sludge pumps will be supplied by others.

11. One (1) 3 HP hydraulic power unit with a 20-gallon, 304 stainless steel reservoir.

12. One (1) 15 HP Goulds model 3656 wash water booster pump capable of boosting from 40 to 120 PSI at a flow rate of 85 GPM. The wash water system will include a low water pressure switch and solenoid valve.

13. Start-up, mechanical checkout and operator training, including performance test, a total of eleven (7) days on site, two trips to site.

14. One year machine warranty.

354 State Route 29, Greenwich, New York 12834
Phone No 518-695-6851
E-mail: aj@bdpindustries.com

15. Freight to the jobsite.

The model 3DP belt press will come completely factory-assembled, tested and will be shipped in two pieces. The polymer injection device, hydraulic unit, belt media, booster pump, VFDs and electrical control panels will be packed separately. This quotation is for furnishing equipment as detailed above. All labor and material for interconnecting between the press and the auxiliary equipment is to be completed by others.

SUBMITTAL DATA

Submittals will be made in the number of copies specified and will be available within 4 to 8 weeks after firm purchase order and all information is received at the factory.

SHIPMENT

Approximate shipping weight of the gravity belt thickener is 12,500lbs the belt press 27,000 pounds. Estimated shipping time is 18 to 24 weeks after receipt of submittal approval.

FIELD SERVICE

Installation observation, testing and operator instruction services as listed above will be supplied. Additional service can be supplied at a service rate of $900 per day plus travel expenses.

354 State Route 29, Greenwich, New York 12834
Phone No 518-695-6851
E-mail: aj@bdpindustries.com

PRICING

Prices for the above equipment items are:

Gravity Belt Thickener:

• One (1) 1.5 meter Gravity Belt Thickener:	$95,000
• Control Panel:	$21,500
• Hydraulic Power Unit:	Incl with Press
• One (1) Gould Wash Water Pump:	$3,700
• Freight to Job Site:	$10,000
• Seven days, two trips of Field Service Engineer:	$8,500
• Total Package:	$138,700

Belt Press:

• One (1) 1.5 meter 3DP Belt Press:	$200,000
• Control Panel:	$25,000
• Hydraulic Power Unit:	Incl with Press
• One (1) Gould Wash Water Pump:	$4,500
• Freight to Job Site:	$10,000
• Seven days, two trips of Field Service Engineer:	$8,500
• Total Package:	$248,000

354 State Route 29, Greenwich, New York 12834
Phone No 518-695-6851
E-mail: aj@bdpindustries.com

Pressure Section to Convert GBT to Belt Press :

• One (1) 1.5 meter Pressure Section:	$110,000
• Control Panel Conversion:	$11,500
• Hydraulic Power Unit:	Incl with Press
• One (1) Gould Wash Water Pump:	$4,500
• Freight to Job Site:	$10,000
• Seven days, two trips of Field Service Engineer:	$8,500
• Total Package:	$144,500

TERMS

Terms of payment are 90% upon shipment of equipment and 10% upon start up.

We appreciate this opportunity to extend our quotation. If we can answer questions or supply additional information, please do not hesitate to contact Josh Queen or myself.

Sincerely,

Kelly Brown
Director
BDP Industries, Inc.

cc: A J Schmidt, BDP Industries, Inc.

Goble Sampson Associates, Inc. (Queen, Josh)
2460 W. 26th Ave, #30-C
Denver, CO 80211
Bus: (303) 770-6418
Mobile: (303) 815-8257
Bus Fax: (303) 770-6424
E-mail: jqueen@goblesampson.com

354 State Route 29, Greenwich, New York 12834
Phone No 518-695-6851
E-mail: aj@bdpindustries.com

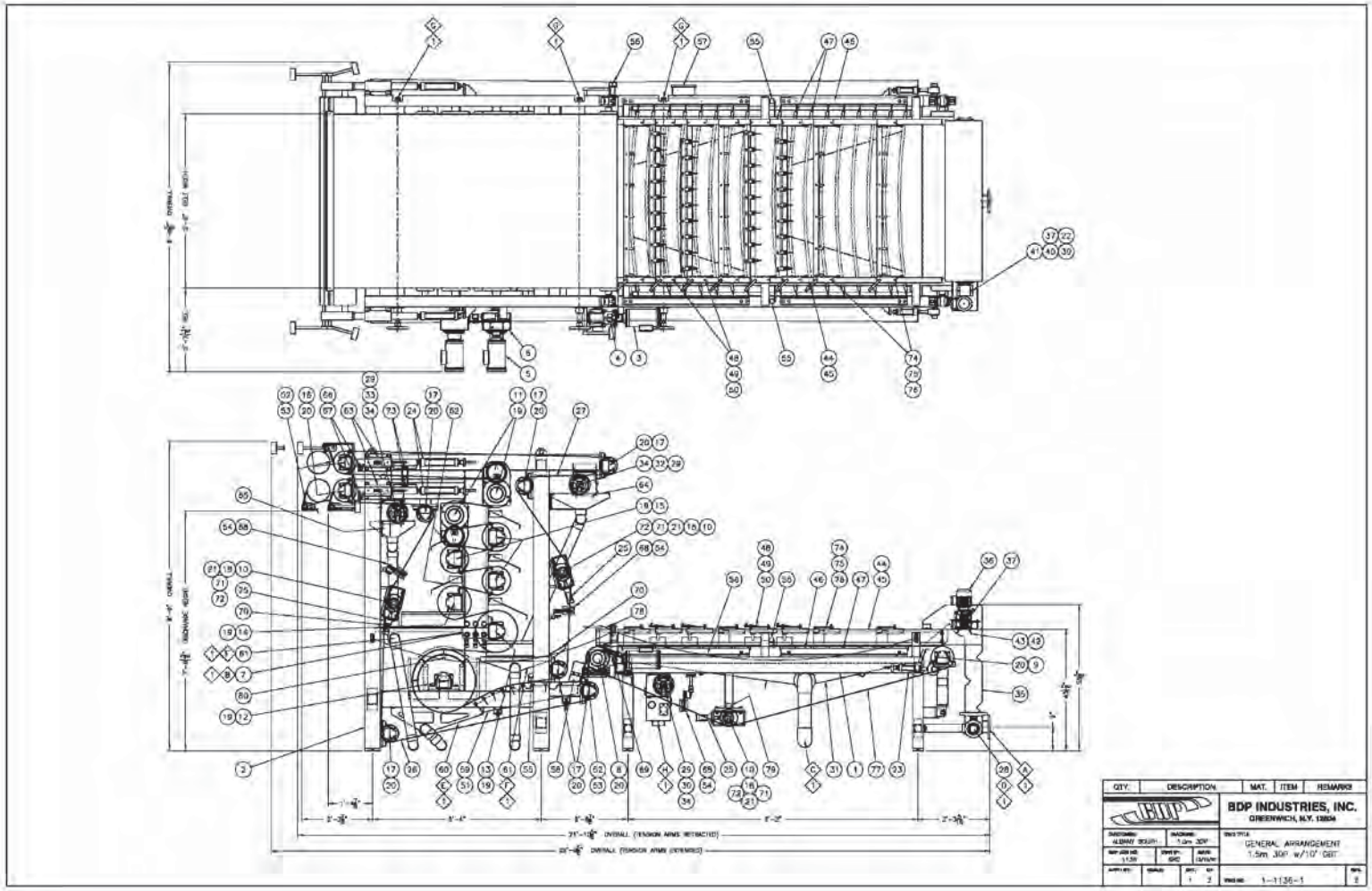

354 State Route 29, Greenwich, New York 12834
Phone No 518-695-6851
E-mail: aj@bdpindustries.com

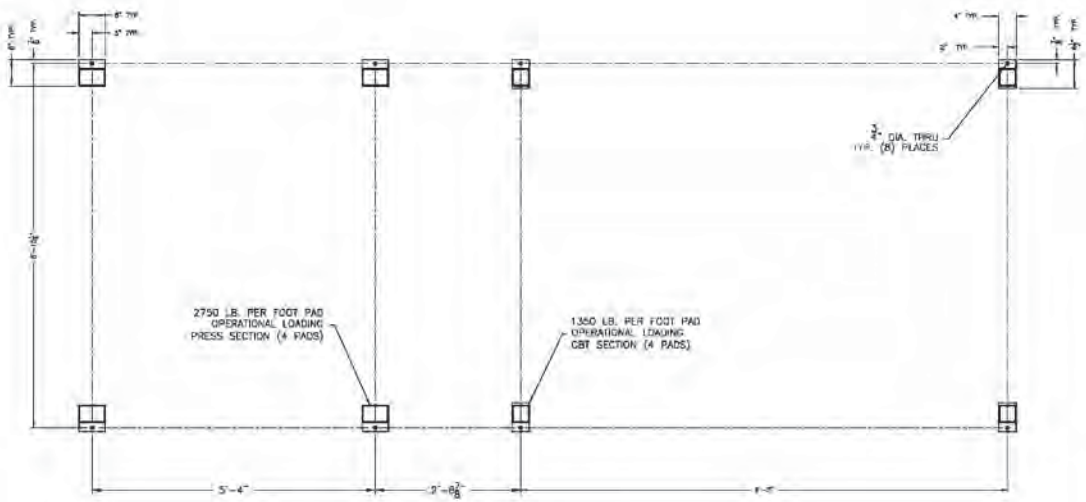

FOUNDATION LAYOUT

NOTES:

1. FRAME BEYOND THIS POINT TO BE INDEPENDENTLY SUPPORTED (NOT ON BDP).
2. ALL STAINLESS SHEET, PLATE, AND BAR IS TYPE 304 SS. ALL FASTENERS AND MISCELLANEOUS HARDWARE IS TYPE 304 SS.
3. FRAME IS HOT DIP GALVANIZED PER ASTM A123.
4. ITEMS NOT OTHERWISE PROTECTED ARE COATED WITH A MILD DRY FRAME SURFACE HIGH SOLIDS EPOXY, HOBAT BLUE.
5. HYDRAULIC TUBING AND FITTINGS ARE SS.
6. ELECTRICAL CONDUIT IS PVC TYPE.
7. DRAIN PIPING IS PVC.
8. MACHINE TO BE DISASSEMBLED ON-SITE FOR INSTALLATION. DO NOT APPLY SILICONE SEALANTS, ETC. IN ASSEMBLY SHOP.

CONNECTION LEGEND:

1. 4" FEED INLET: HOLE PATTERN PER A.S.A. B16.5 150# FLANGE
2. 1/2" SAE-8 HYDRAULIC CONTROL MANIFOLD INLET/RETURN
3. (2) 3" CBT COLLECTION PAN DRAIN
4. 3" FEED BOX DRAIN
5. (2) 3" WEDGE/PERFORATED ROLL PAN OUTLET
6. (2) 3" COMPRESSION SECTION PAN OUTLET
7. (3) 1-1/2" VICKSLUE SHOWER INLET: 75 GPM @ 120 PSIG
8. (2) 4" CBT SHOWER OUTLET (TO SUMP)

QTY.	DESCRIPTION	MAT.	ITEM	REMARKS
2	BELT TENSION LIMIT SWITCH	NEMA 4X	73	PRESS SECTION
3	ALIGNING BEARING SLIDE	UHMW	72	
3	ALIGNING BEARING GUIDE	IRNED	71	
2	DRIP PAN BELT SCRAPER	UHMW	70	
1	CBT DRIVE ROLL SEAL	RUBBER	69	
3	BELT ALIGNING PADDLE	316 SS	68	
4	TENSION RACK GEAR BEARING	304 SS	67	
4	TENSION RACK GEAR	303 SS	66	
1	LOWER SHOWER DRIP PAN	304 SS	65	
1	UPPER SHOWER DRIP PAN	304 SS	64	
2	TENSION ASSEMBLY		63	
3	DRIP DEFLECTION PAN	304 SS	62	
2	COMPRESSION SECTION PAN	304 SS	61	3" OUTLET
1	WEDGE/PERF. ROLL PAN ASM.	304 SS	60	(3) 3" OUTLETS
1	CENTRAL WEDGE ASSEMBLY	304 SS	59	
1	TRANSITION ASSEMBLY	SHAN/304	58	
1	ELECTRICAL JUNCTION BOX	FRP	57	NEMA 4X
2	EMERGENCY STOP ASSEMBLY		56	EACH SIDE
4	BELT MISALIGNMENT SWITCH		55	EACH SIDE
3	BELT ALIGNING VALVE		54	HYDRAULIC
3	BELT DOCTOR BLADE	UHMW	53	
3	DOCTOR BAR ASSEMBLY	304 SS	52	
8	WEDGE SLIDE BAR	UHMW	51	
36	PIVOT PLOW LOWER	POLY-E	50	
36	PIVOT PLOW BLADE	POLY-E	49	
4	PIVOT PLOW SUPPORT ASSEMBLY	STEEL	48	GALVANIZED
18	GRAVITY SECTION SLIDE BAR	UHMW	47	
9	BLADE BAR SUPPORT ASSEMBLY	304 SS	46	ADJUSTABLE HEIGHT
2	CHAIN RAIL SEAL	RUBBER	45	
2	CHAIN RAIL ASSEMBLY	304 SS	44	
8	ACTATOR BAR PADDLE FLAP	RUBBER	43	
1	FEEDBOX ACTATOR BAR	304 SS	42	
2	1" SHAFT SEAL	RUBBER	41	
1	COUPLING INSERT	NEOPRENE	40	
2	1" HALF COUPLING	STEEL	39	
			38	
1	FEEDBOX ACTATOR REDUCER	13:1	37	
1	FEED BOX ACTATOR MOTOR	1/3 HP	36	
3	CBT FEED BOX	304 SS	35	4" INLET
12	SHOWER ENCLOSURE SEAL	RUBBER	34	
1	PRESS SHOWER ENCLOSURE	304 SS	33	LOWER BELT
1	PRESS SHOWER ENCLOSURE	304 SS	32	UPPER BELT
1	CBT COLLECTION PAN	304 SS	31	
1	CBT SHOWER ENCLOSURE	304 SS	30	
3	BELT WASH SHOWER	304 SS	29	SELF-CLEANING
1	3" BALL VALVE	PVC	28	
1	UPPER DEWATERING BELT	POLYESTER	27	96" WIDE
1	LOWER DEWATERING BELT	POLYESTER	26	96" WIDE
3	ALIGNING CYLINDER		25	2"ø x 2" STROKE
4	TENSION CYLINDER, PRESS		24	2.5"ø x 10" STROKE
2	TENSION CYLINDER, CBT		23	2"ø x 4" STROKE
2	1" 4-BOLT FLANGE BEARING		22	BALL BEARING
3	1-7/16" TAKE-UP BEARING		21	SPHERICAL ROLLER
30	3-15/16" LOAF BEARING		20	SPHERICAL ROLLER
16	2-7/16" LOAF BEARING		19	SPHERICAL ROLLER
3	1-7/16" UNIFLOW BEARING		18	SPHERICAL ROLLER
8	6" IDLER ROLL, PRESS	STEEL	17	NYLON COVERED
2	9" TENSION ROLL, PRESS	STEEL	16	NYLON COVERED
3	11" COMPRESSION ROLL, PRESS	STEEL	15	NYLON COVERED
1	13" COMPRESSION ROLL, PRESS	STEEL	14	NYLON COVERED
1	16" COMPRESSION ROLL, PRESS	STEEL	13	NYLON COVERED
1	24" COMPRESSION ROLL, PRESS	304 SS	12	HONEDNATED
2	11" DRIVE ROLL, PRESS	STEEL	11	EAA COVERED
3	6" ALIGNING ROLL	STEEL	10	EAA COVERED
1	9" TENSION ROLL, CBT	STEEL	9	NYLON COVERED
1	8" DRIVE ROLL, CBT	STEEL	8	EAA COVERED
1	HYDRAULIC CONTROL MANIFOLD		7	
2	PRESS REDUCER	19:1	6	SHAFT MOUNTED
2	PRESS DRIVE MOTOR, 1.5HP		5	
1	CBT REDUCER	5:1	4	SHAFT MOUNTED
1	CBT DRIVE MOTOR, 2 HP		3	
1	PRESS TUBULAR STEEL FRAME		2	ASTM A513
1	CBT TUBULAR STEEL FRAME		1	ASTM A513

1	BELT ZERO SPEED SWITCH		80	PRESS SECTION
1	BELT ZERO SPEED SWITCH		79	CBT SECTION
1	SLUDGE REDISTRIBUTION BAR	304 SS	78	
1	DEWATERING BELT, CBT	POLYESTER	77	96" WIDE
24	ENDLESSOR PLOW WRIGHT	POLY-E	76	
30	ENDLESSOR PLOW BLADE	UHMW	75	
4	ENDLESSOR PLOW SUPPORT ASM	STEEL	74	GALVANIZED

REV.	DESCRIPTION	BY	DATE
3	REVERSED MACHINE ORIENTATION	SKG	UNW

BDP INDUSTRIES, INC.
GREENWICH, N.Y. 12834

CUSTOMER: ALBANY SOUTH
MACHINE: 1.5m 30F
SHEET TITLE: GENERAL ARRANGEMENT 1.5m 30F w/10' CBT
JOB NO. 1136
DWG BY: SKG
DATE: UNW
SHEET NO. 2 OF 2
DWG NO. 1-1136-1
REV. 3

354 State Route 29, Greenwich, New York 12834
Phone No 518-695-6851
E-mail: aj@bdpindustries.com

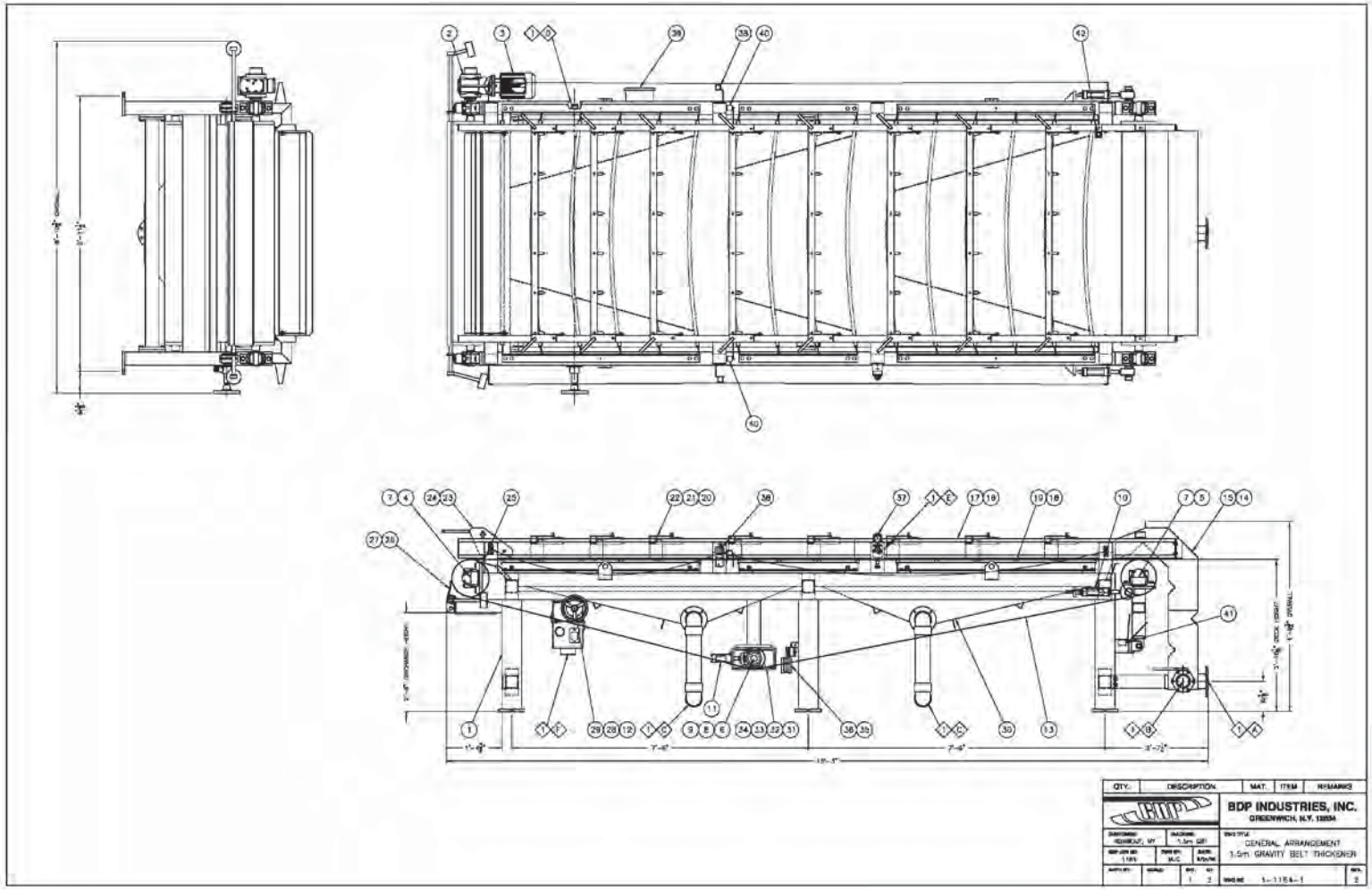

354 State Route 29, Greenwich, New York 12834
Phone No 518-695-6851
E-mail: aj@bdpindustries.com

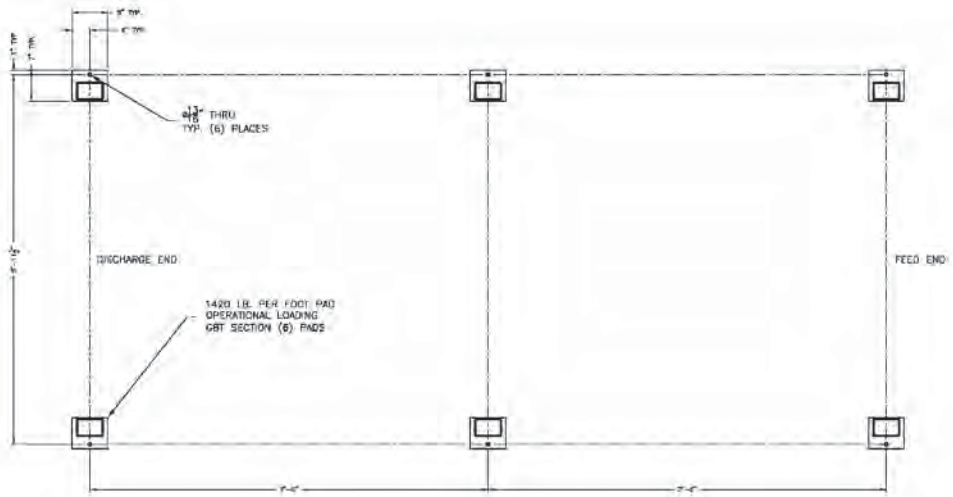

FOOT PAD LAYOUT

NOTES:

1. PIPING BEYOND THIS POINT INDEPENDENTLY SUPPORTED (NOT BY BDP).
2. FRAME IS HOT DIP GALVANIZED PER ASTM SPECIFICATION A-123.
3. ALL STAINLESS STEEL SHEET AND PLATE IS TYPE 304 SS. ALL FASTENERS AND HARDWARE IS TYPE 304 SS.
4. ITEMS NOT OTHERWISE PROTECTED ARE COATED WITH 6 MILS DFT TNEMEC SERIES 104 HIGH SOLIDS EPOXY PER BDP PAINT SPECIFICATION QA94-006.
5. HYDRAULIC TUBING IS TYPE 316 SS.
6. ELECTRICAL LINES ARE ENCLOSED IN GALVANIZED RIGID STEEL CONDUIT.
7. APPROXIMATE WEIGHT: 6,500 LB. DRY
   8,520 LB. OPERATING
8. HEAVIEST COMPONENT: DRIVE ROLL 360 LB.

CONNECTION LEGEND:

- (A) 4" FEED INLET FLANGE, HOLE PATTERN PER A.S.A. B16.5 150# FLANGE
- (B) 3" FEED BOX DRAIN VALVE
- (C) (4) 4" FILTRATE COLLECTION PAN OUTLET
- (D) (1) 1-1/2" VICTAULIC SHOWER INLET
- (E) 1/2" SAE-8 HYDRAULIC MANIFOLD PRESSURE/RETURN
- (F) (2) 4" SHOWER ENCLOSURE DRAIN

QTY.	DESCRIPTION	MAT.	ITEM	REMARKS
1	HIGH LEVEL SWITCH	MONITOR	42	[illegible]
1	SHOWER BELT SWITCH	[illegible]	41	[illegible]
2	BELT MISALIGNMENT SWITCH	[illegible]	40	[illegible]
1	ELECTRICAL JUNCTION BOX	TYP	39	[illegible]
2	EMERGENCY STOP ASSEMBLY	[illegible]	38	[illegible]
1	HYDRAULIC CONTROL MANIFOLD		37	
1	BELT ALIGNING PADDLE	316 SS	36	
1	BELT ALIGNING VALVE	MONITOR	35	[illegible]
1	ALIGNING SLED SLIDE SURFACE	UHMW	34	
1	ALIGNING BEARING SLED	304 SS	33	
1	ALIGNING BEARING PAN	BRASS	32	
1	BELT ALIGNING ASSEMBLY	STEEL	31	
2	FILTRATE COLLECTION PAN	304 SS	30	4" OUTLET
1	SHOWER ENCLOSURE SEAL	RUBBER	29	
1	BELT SHOWER ENCLOSURE	304 SS	28	
1	DOCTOR BLADE	UHMW	27	
1	DOCTOR BAR	304 SS	26	
1	DRIVE ROLL SEAL	RUBBER	25	
1	SLUDGE DAM BLADE	UHMW	24	
1	SLUDGE DAM ASSEMBLY	304 SS	23	
24	DIVERSION FLOW UPRIGHT	UHMW	22	
48	DIVERSION FLOW BLADE	UHMW	21	
8	DIVERSION FLOW SUPPORT BAR	STEEL	20	GALVANIZED
16	SLIDE BAR	UHMW	19	
3	SLIDE BAR SUPPORT ASSEMBLY	304 SS	18	
2	SLIDE RAIL SEAL	RUBBER	17	
2	SIDE RAIL ASSEMBLY	304 SS	16	
1	FEEDBOX/BELT SEAL	RUBBER	15	
1	FEEDBOX ASSEMBLY	304 SS	14	4"-150# INLET
1	DEWATERING BELT		13	52" WIDE
2	BELT WASH SHOWER .075"	304 SS	12	BELT CLEANING
1	ALIGNING HYDRAULIC CYLINDER		11	[illegible] x 3" STROKE
2	TENSION HYDRAULIC CYLINDER		10	[illegible] x 4" STROKE
1	1-15/16" TAKE-UP BEARING		9	SPHERICAL ROLLER
1	1-15/16" UNBLOCK BEARING		8	SPHERICAL ROLLER
6	1-15/16" IDLER BEARING		7	SPHERICAL ROLLER
1	3" ALIGNING ROLL	STEEL	6	EPA COATED
1	11" TENSION ROLL	STEEL	5	NYLON COVERED
1	11" DRIVE ROLL	STEEL	4	EPA COVERED
1	BELT DRIVE GEARMOTOR, 2HP		3	[illegible]
1	BELT DRIVE GEARBOX, 30:1		2	
1	TUBULAR STEEL FRAME	ASSEMBLY	1	GALVANIZED

BDP INDUSTRIES, INC.
GREENWICH, N.Y. 12834

DRAWN BY: ROHRKOUT, NY
SCALE: 1.5m GBT
DWG TITLE: GENERAL ARRANGEMENT
1.5m GRAVITY BELT THICKENER
BDP JOB NO. 1184
DWN BY: MJC
DATE: 8/6/96
APPV'D BY:
SHEET: 3 OF 3
DWG NO. 1-1184-1
REV. 2

REV.	DESCRIPTION	BY	DATE
2	FOOTPAD WIDTH WAS 7"	MJC	9/6/96

BDP INDUSTRIES

Manufacturer of Dewatering Systems

GBT™ – Gravity Belt Thickener

and Rotary Drum Concentrator

www.bdpindustries.com

Industry Leader in Design and Manufacture of Filtration Equipment

Superior sludge thickening

– simple, reliable operation.

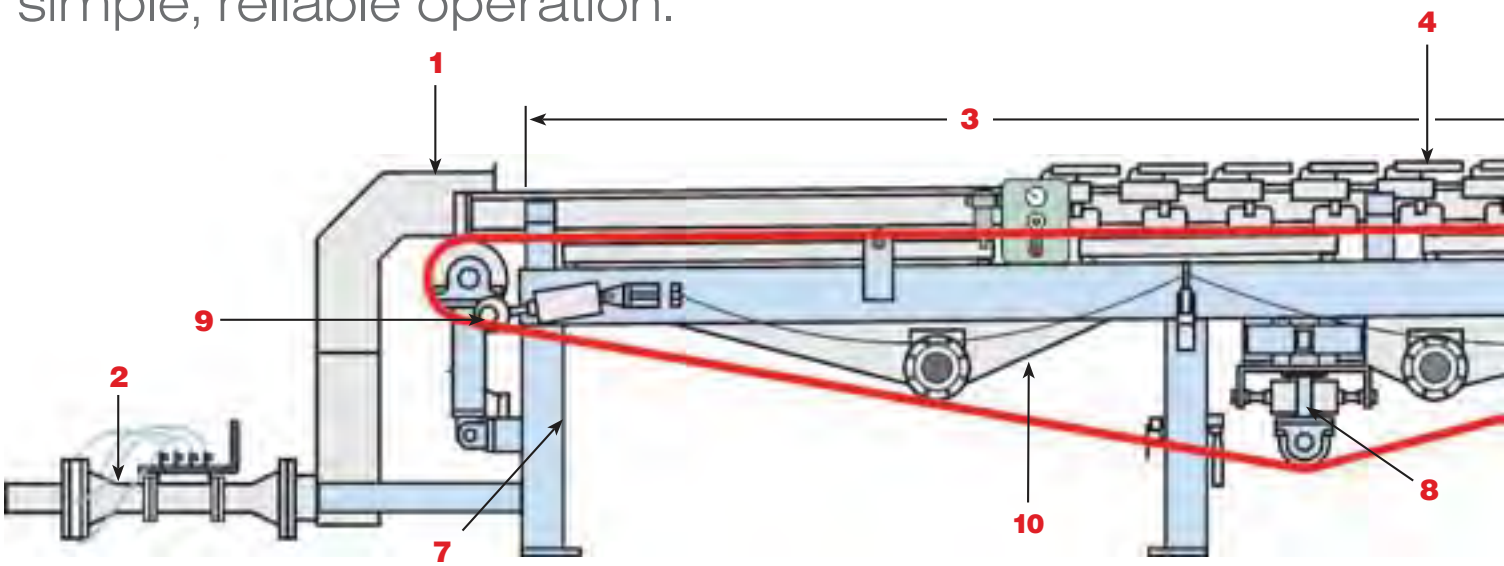

Design Features

1 Feed Box: Upflow smooth full width weir configuration. Dissipates flow energy, provides retention time for flocculation and insures extremely even slurry distribution so vital to maximizing slurry thickening.

Venturi Mixer

2 Venturi Mixer: Polymer is injected through (4) tangential inlets in the "injection ring" up steam of the "venturi and counterweighted orifice plate".

3 Gravity Deck: (above) Plastic belt supporting slide strips are easily removed with no disassembly of deckles, Apex curvature along centerline of belt eliminates belt wrinkling. Foil configuration of each slide effectively removes filtrate improving sludge thickening.

4 Adjustable Angle Plows: The adjustable angle allows for maximizing the furrowing action as the sludge thickens.

Adjustable Angle Plows

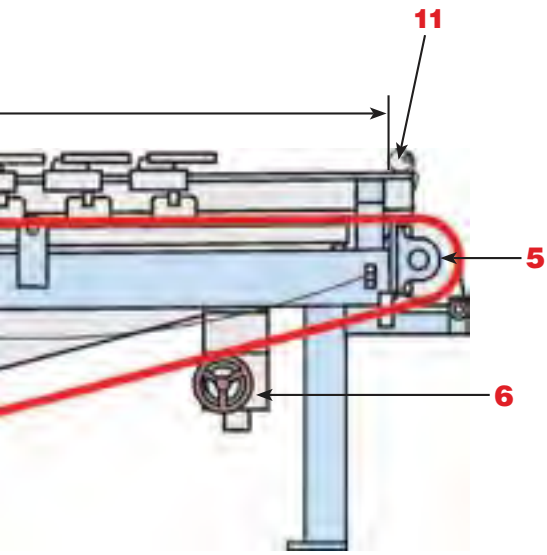

5 Belt Drive: Capable of varying output speed from 8 to 100 feet per minute, a right angle gear reducer / electric motor with speed control through a control panel mounted "Variable Frequency Controller".

6 Belt Washing: Spray header is mounted inside stainless steel enclosure, eliminating misting. Spray nozzles are internally cleaned and flushed by hand wheel operated wire brush and valve assembly.

7 Tubular Steel Frame: Significantly easier to keep clean. Extremely high moment of inertia (bending and radial inertia 3 to 10 times that of competitors') Hot dipped galvanized inside and out. Precision machined bearing and cross member mounting pads for accurate bearing, roll and frame alignment.

8 Belt Tracking: Tracking systems are available in both pneumatic and hydraulic systems providing trouble free operation. Tracking systems offer smooth and continous tracking without excessive movement.

9 Belt Tensioning: The belt tensioning is adjustable to automatically maintain proper tension. Swing arm assembly provides uniform tension across the full width of the belt. Controls are located on the frame for ease of operation.

10 Collection Pans: Extremely rugged heavy gauge stainless steel collection pans are provided to keep filtrate from falling on filter belt, tracking and tensioning assemblies, to prevent blinding/fouling of these critical components.

11 Thickening Sludge Dam: Adjustable height sludge dam provides additional dewatering to optimize sludge thickening.

GBT™ – Gravity Belt Thickener

Unique Features and How they Work

The Gravity Belt Thickener is used to thicken sludge prior to centrifuge or digestion processes. A mix of primary or secondary sludge can easily be thickened to +7% wt, pure secondary to over 5%.

The GBT offers:

- *High unit capacity per floor space*
- *Low residence time eliminates septicity and float scum*
- *Superior thickening*
- *Low maintenance and simple, reliable operation.*

Venturi Mixer: Provides excellent dispersion of flocculent. The adjustable counter-weighted baffle allows efficient optimization of slurry flocculation for shortened drainage time.

Feed Distribution: The up-flow smooth, full width, weir design provides necessary time for optimum flocc growth and dissipates the feed pipe velocity so the flocc isn't sheared. Slurry is distributed very uniformily across the entire width, regardless of feed consistency.

Gravity Deck: The GBT delivers the largest filtration area per meter of belt width in the industry providing high efficiency thickening and cost effective chemical utilization.

Furrowing Plows: The combination Foil Doctor and adjustable angle plows provide two times the liquid removal of the conventional plow designs of our competitors. The floating mount minimizes filter media wear.

References: Will be provided from over 100 installations. Request appropriate process list and confirm for yourself unmatched process performance and reliability.

Rugged Durable Construction: Tubular construction, hot dip galvanized coating, highest structural moment of inertia, most wetted components, feed box, drainage pans, etc are constructed of stainless steel and all other wetted components are of suitable materials, plastic etc, to provide maximum corrosion protection and construction that will last the life of the facility.

New Plow Design

The Foil Doctor® Plow represents a new breakthrough in dewatering technology. The basic concept behind any plow design is to furrow deposited solids on the surface of the filter cloth to expose filter cloth so filtrate can go through with less resistance to flow.

The foil design enhances this short circuiting action by lifting the deposited solids across the full belt width. This action, coupled with the incorporated plows just ahead of the foil, creates a compressive force on the slurry that further enhances dewatering.

The Foil Doctor blade assembly floats on the surface of the filter cloth. Because the assembly floats, as the Foil Doctor assembly wears it still maintains optimum contact. With the conventional furrowing design, wear usually results in a smearing of sludge aggrevating clogging of the filter cloth. Testing has found that one Foil Doctor Plow assembly is equivalent in thickening action to two conventional furrowing plow assemblies.

Significantly thickened slurry coming over Foil Doctor Plow.

Sludge in compression, filtrate being expressed from slurry.

Metal cross support

Vertical plastic supports for Foil Doctor Plow

The Totally Enclosed GBT

With more stringent air quality restrictions, it has become necessary to limit the quantity of air associated with the GBT operation, thus enters the BDP's Totally Enclosed unit. The design incorporates a monolith frame constructed from stainless steel plates cut with the state of the art "Water Jet" plate cutting center. Belt drive, bearings and other components are mounted outside the enclosure for ease of maintenance.

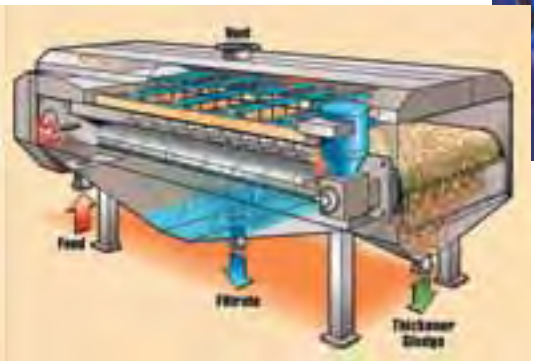

The design encloses the feed distribution assembly, gravity deck, filtrate collection pan and thickened cake discharge. Units are available in width from 0.5 meter to 4 meter. The enclosed GBT can be provide with manual or automatic tensioning and tracking depending on the owners preference.

RDT *as an* Alternative *to a* GBT

– when space is limited or requirements are less demanding.

The RDT offers:

- ***Lower space requirement and lower capital cost than a GBT.***
- ***Minimal operator attention.***

Each Rotary Drum Element is composed of five stainless steel discs supported off a center shaft. The shaft rotates in externally mounted bearings, to prevent contamination from the slurry.

Filtrate Drips into Stainless Steel Drip Pan

Slurry is conveyed through the RDC with a spiral screw assembly attached to the five discs. Filter cloth is wrapped around the perimeter of the five discs and held in place with stainless steel bands; forming the rotary drum. Feed enters the RDC from an overflow weir tank/ launder assembly.

Filtrate is collected in a stainless steel drip pan below the rotary drum.

Thickened slurry flows out the open end of the Rotary Drum and down a chute deflecting it away from the filtrate pan. A shaft mounted gear reducer motor and torque arm drives the rotary drum on the outboard center shaft. A Variable Frequency Controller controls rotating speed of the drum.

An adjustable angle, self-cleaning shower cleans the filter cloth during each revolution.

Rotary Drum Elements are made in 3' and 4' diameters and lengths up to 10'.

Slurry Discharge

Cloth Shower

If higher through put is required two drums can be operated in parallel with a common feed and discharge.

Typical Performance Results

GBT Belt Filter Press

Type of Sludge	Feed Conc. WT%	Thickened Discharge Conc. WT%		Loading Rate gpm/m Belt Width		Sludge Volume Reduction, %	
		RDT	GBT	RDT 4'x8' Drum Prop. to dia. and length	GBT gpm/m	RDT	GBT
Waste Activated Sludge	0.5 - 0.9	3.5 - 4.5	5 - 7	100 - 150	200 - 300	75 - 80	85 - 95
Primary	3 - 5	5 - 10	8 - 15	40 - 70	60 - 100	45 - 75	60 - 80
Primary/WAS	0.8 - 2	5 - 8	6 - 11	80 - 130	130 - 200	75 - 80	85 - 90
Pulp & Paper	There are too many types of slurries for this industry to generalize. BDP Industries has many iinstallations. Please call factory for details.						

*** The representative performance values in the table can fluctuate substantially and are provided only for estimating purposes.**

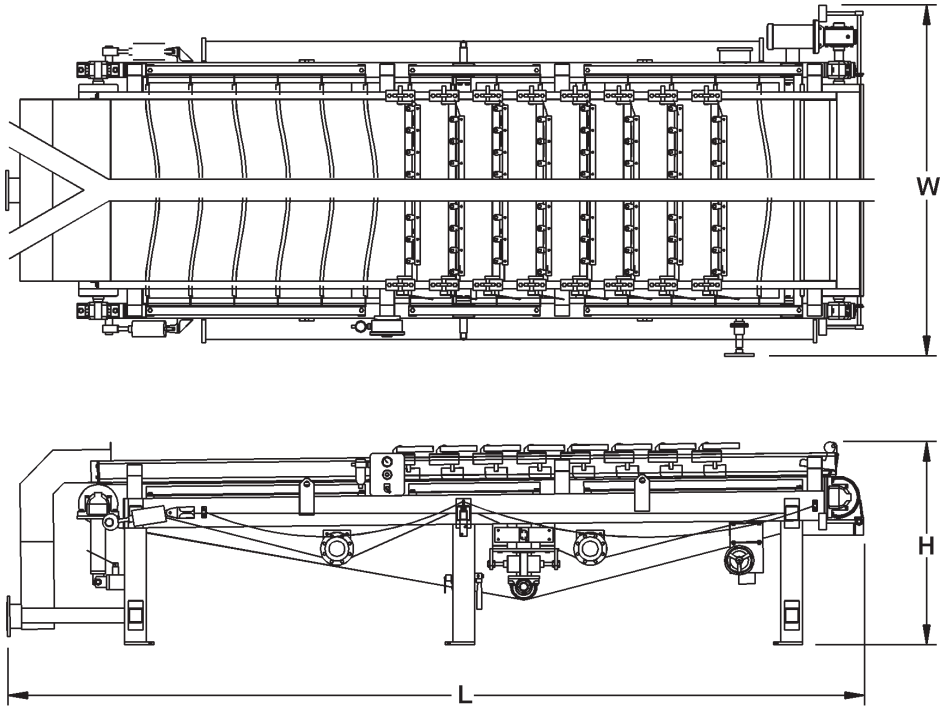

BDP GBT Gravity Belt Thickener Data

Size (m)		Overall Approx. Dimensions inches (mm) Length	Width	Height	Operating Weight lbs (kg)	Belt Width m
0.5	CP	180 (4,572)	60 (1,524)	54 (1,372)	4,000 (1,814)	0.6
0.75	CP	180 (4,572)	70 (1,778)	54 (1,372)	5,000 (2,268)	0.9
1.0	CP	180 (4,572)	80 (2,032)	54 (1,372)	6,000 (2,722)	1.2
1.0	XP	232 (5,893)	87 (2,210)	55 (1,397)	7,500 (3,402)	1.2
1.5	XP	232 (5,893)	107 (2,718)	55 (1,397)	8,500 (3,856)	1.7
2.0	XP	232 (5,893)	127 (3,226)	55 (1,397)	9,600 (4,355)	2.2
2.5	XP	232 (5,893)	147 (3,734)	55 (1,397)	10,800 (4,899)	2.7
3.0	XP	232 (5,893)	167 (4,242)	55 (1,397)	12,000 (5,443)	3.2
4.0	XP	238 (6,045)	207 (5,258)	57 (1,448)	21,000 (9,525)	4.2

*** Custom sizes and designs available upon request**

4.0 m Gravity Belt Thickener

Rotary Drum Thickener

Totally Enclosed GBT

Filtrate

A Leader in Solids Dewatering.

BDP Industries is an OEM supplier of solids dewatering equipment for several prestigious Fortune 500 companies. With a 40,000 sq. ft. manufacturing facility and the most hands on experience in the industry, BDP has evolved into one of the most modern and complete solids dewatering suppliers in the world.

BDP Industries produces a range of high quality products and services:

- Gravity Belt Thickeners
- Belt Presses
- Screw Presses
- Rotary Drum Concentrators
- Lime Stabilization Systems
- Polymer Systems
- Compost Turning Equipment
- Pulp & Paper Stock Thickeners
- Plate & Frame Presses
- Conveyors
- Process Control Panels
- Equipment Restoration
- On-Site Service
- Mobile Dewatering Demonstrations

P.O. Box 118
354 State Route 29
Greenwich, NY 12834
TEL: (518) 695-6851
FAX: (518) 695-5417

www.bdpindustries.com

© 2011 BDP Industries, Inc. This document is a general product presentation and is not a guarantee of any kind. All the information contained herein is subject to change without notice. Direc-tions for use and safety will be given separately.

We're located near you.

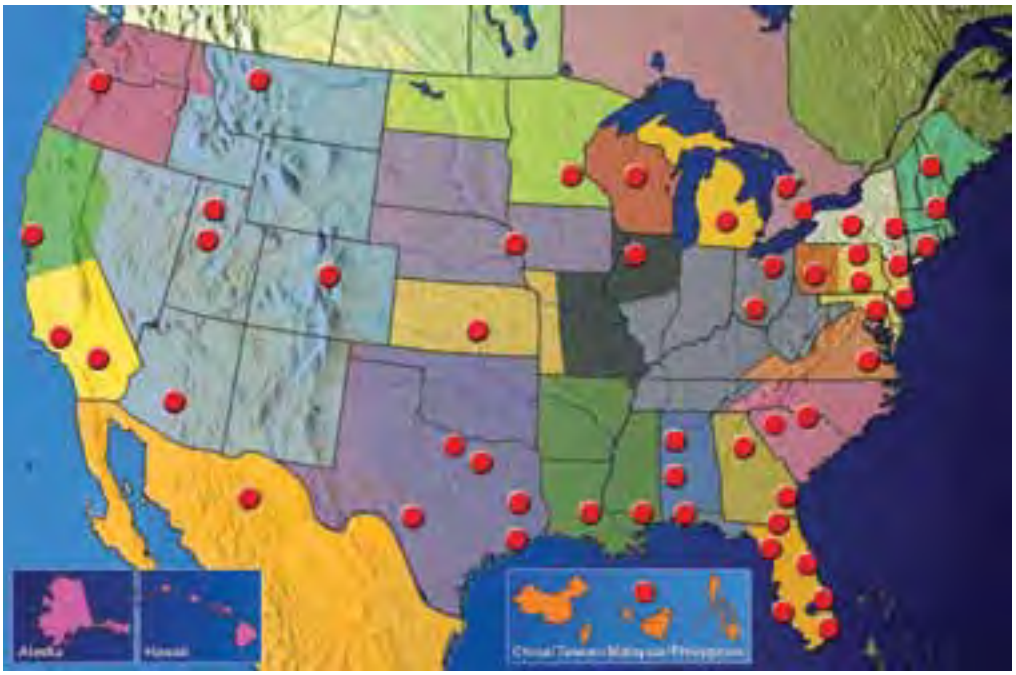

Your local BDP representative:

BDP INDUSTRIES

Manufacturer of Dewatering Systems

Model 3DP™ Belt Filter Press

www.bdpindustries.com

Over 30 years of experience in belt press technology

Higher Cake Solids and Feed Rate

— with LOWER Maintenance Costs.

*BDP Industries' **Model 3DP Belt Press** was designed with **unique features** to provide higher discharge cake solids at higher feed flow rates than any competitor's machine and will operate day in and day out with lower maintenance costs. The 3DP provides **easier access** for operators and maintenance staff. The 3DP is a rugged, durable machine that will provide **years of reliable service.***

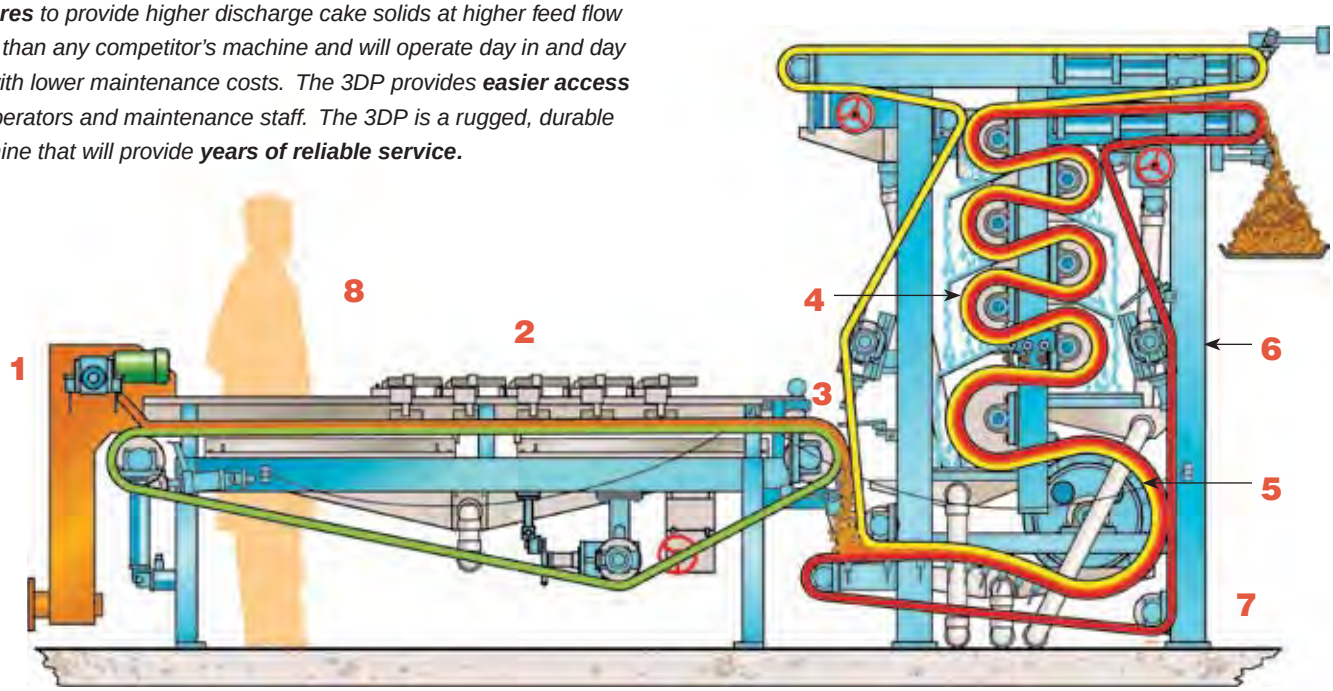

Design Features

1 **Feed Distributor:** Unique, variable speed paddle wheel provides full belt-width distribution and uniform thickness .

2 **Independent Gravity Zone:** Allows for higher production capacity as well as higher cake solids. ***Available in standard lengths from 6 - 16 ft in 2 ft intervals.***

3 **Spiral Wedge:** Applies increasing cake pressure over the entire length for effective expressing of filtrate with excellent cake retention.

4 **Vertical Pressure Rolls:** Vertical arrangement allows for filtrate pans under each roll to keep filtrate from falling on adjacent rolls. This eliminates reabsorbtion of filtrate and improves discharge cake solids. Discharge height adequate for conveyor without raising press. ***Up to 12 pressure rolls are available.***

5 **Perforated Roll:** Unique design and stainless steel construction improves dewatering and structural strength of roll.

6 **Tubular Frame Construction:** Provides superior structural strength over channel and I-beam construction. Enhanced cleanliness. Hot-dip galvanized coating inside and out affords maximum corrosion resistance. ***Also available in stainless steel.***

7 **Machined Mounting Pads:** All bearing and structural bolted connections are machined, tapped pads which are welded to frame. This enhances structural strength and corrosion resistance.

8 **Overall Layout:** Gravity zone and controls located at operator level simplifies process optimization and eliminates costly platforms.

Unique Features and How They Work

Standard two belt technology employed by most manufacturers forces a compromise in either through-put capacity or discharge cake solid concentration, because belt speed in the two zones must be the same. Three belt technology used by BDP overcomes this limitation by allowing independent speed control in each zone.

In addition significant improvements in feed distribution, wedge zone pressure gradation and effectiveness and elimination of filtrate pooling/rewetting in the pressure zone *MAXIMIZES PERFORMANCE*. The unique low profile gravity zone, tubular steel frame, machined mounting pads for bearings, and bolted connections all provide easier access for maintenance. In photo at right: notice the unique layout and lack of platforms, allowing easy access for maintenance.

The unique designs of the Gravity and Pressure Zones provide MAXIMUM PERFORMANCE.

3DP Belt Filter Press

Upflow Adjustable Speed Paddle Wheel Feed Box

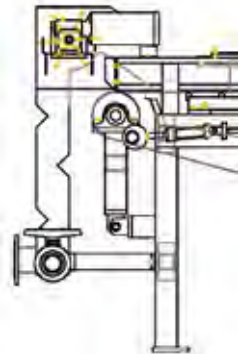

This unique design produces extremely uniform slurry distribution. Sludge enters horizontally at floor level, then transitions to vertical in the upflow conditioning tank and spreads to full belt width. Then the slurry overflows the vertical tank into the paddle wheel distributor weir trough. The adjustable speed paddle wheel pushes the slurry out of the weir trough onto the belt.

Pictured (at right) is 3.5% concentration anaerobically digested sludge; notice the even, full width distribution immediately upon leaving the feed distributor.

Feed box side view

Paddle wheel

Uniform slurry distribution

Independent Gravity Zone

The Model 3DP improves solids loading rate and cake solids with "Independent Gravity Zone Technology".
Conventional two-belt press designs use a gravity zone and pressure zone with a common belt fabric and drive. Belt speed and belt fabric porosity selections are compromised in an attempt to suit both gravity zone thickening and pressure zone dewatering, reducing effectiveness.
BDP has solved this problem.

The 3DP "Independent Gravity Zone Technology" uses separate gravity and pressure zones. This allows "optimizing" the porosity of the belt fabric and belt speed for the gravity and pressure zones rather than being forced to make a trade-off as explained below.

By increasing belt speed through the gravity zone, a thinner cake is applied to the belt. Resistance to filtrate flow is reduced exponentially as cake thickness is reduced. More filtrate is removed, less volume is sent to the pressure zone.

Filtrate removal in the pressure zone increases as the length of time cake is under pressure increases. The independent drive and reduced volume allow the pressure zone belt speed to be reduced for optimal filtrate removal.

Result: The Model 3DP provides higher hydraulic throughput and cake solids.

Independent Gravity Zone

Spiral Wedge

The problem with existing wedge layouts is that the top belt doesn't contact and apply pressure to the cake until typically 2/3 of the way through the zone. By curving the wedge profile the top belt immediately pressurizes the cake making the entire length of the zone effective. In addition, the spiral profile provides a gradual increase in pressure through the zone and forces an encapsulation of the cake to resist extrusion out the side.

Spiral Wedge

Vertical Pressure Zone

Vertical Pressure Zone

There is no pressure on the filter cake between tangent points of adjacent rolls in the pressure section of a belt press. Therefore, in a horizontal pressure roll configuration, filtrate expressed by each roll runs down the filter cloth to the lower roll and is reabsorbed *(pictured below)* decreasing discharge cake solids.

BDP has the answer.

With the the Vertical configuration of the Pressure Zone in the model 3DP, *(shown left)* filtrate expressed at each roll drips from the tangent point into a diversion pan; eliminating rewetting.

BDP's vertical arrangement eliminates the problem of filtrate running off upper rolls and pooling around lower rolls.

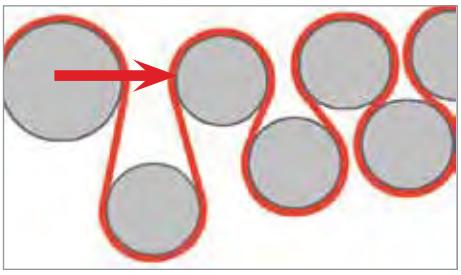

Perforated Roll

Superior Perforated Roll Construction

The highest frequency of roll failures for belt presses is the perforated roll. Typical construction of perforated rolls makes them susceptible to stress fatigue failure of the steel shell where it is welded to inner stiffening rings. BDP Industries' design eliminates the potential for shell failure as the stress load is carried by a solid inner roll. This revolutionary design is the strongest in the industry.

Frame Construction

Channel or I-Beam frame construction are problematic in that corners and ledges are created that are difficult to clean. The tubular frame of the 3DP model provide a flat easy to clean surface.

All bearings are mounted on machined pads welded to the fabricated frame. These pad are precision machined and drilled and tapped for installation of all bearings and bolted frame components.

With channel or I beam, the frame is drilled and weakened at every mounting point. The 3DP frame, on the other hand, is strengthened by tubular steel and machine mounted bearing pads.

Vent holes are strategically placed so that when the frame is hot dip galvanized, it is coated inside and out.

Bottom line: The Model 3DP is stronger, more corrosion resistant, and easier to clean than other machines.

Machined Mounting Pads/Tubular Steel Frame

Overall Layout

Most other belt press designs require the belt press to be elevated due to the low cake discharge point. This requires costly platforms to provide observation of the feed distributor and gravity zone *(see below)*.

The layout of the model 3DP allows for gravity zone and controls to be located at operator level. This simplifies the process and eliminates platforms *(see right)*.

Model 3DP Belt Press

Design Data

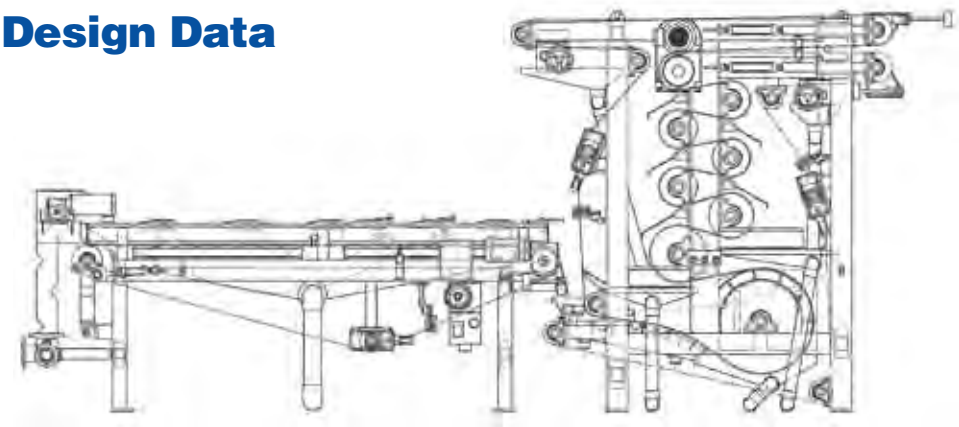

Typical Performance Results

Municipal Sludge Dewatering Spectrum for 3DP

Sludge Type	Feed Consistency	Solid Loading Rate	Cake Dryness	Polymer Consumption
	%	lbs/hr, m	%	lbs/dt
Aerobically Digested	1 - 3	600 - 900	17 - 22	12 - 18
Waste Activated	.7 - 1.5	600 - 900	16 - 20	10 - 15
Anaerobically Digested	2 - 5	900 - 1500	18 - 25	8 - 12
Primary + WAS	3 - 5	900 - 1800	18 - 27	6 - 10
Primary + WAS + RBC	3 - 5	1000 - 2000	20 - 27	10 - 18
Primary + WAS +Trickling Filter	3 - 5	1000 - 2200	22 - 28	10 - 16
Primary + RBC	4 - 6	1200 - 2500	22 - 30	8 - 15
Primary + Trickling Filter	4 - 6	1200 - 2500	24 - 30	6 - 14
Raw Primary	4 - 8	2500 - 3500	28 - 35	3 - 5
SBR	1 - 1.5	600 - 800	15 - 18	10 - 15
MBR	.8 - 1	500 - 700	15 - 18	10 - 15

*** Polymer consumption is based on 100 percent active ingredients**

Because influents, processes and operation vary greatly, processing results have a wide range.
The ratio of blends will also have an impact on dewatering. The above represent the ranges that might be expected.

3DP Machine Data

Size	Overall Approx. Dimensions inches (mm)			Operating Weight	Belt Width
m	Length	Width	Height	lbs (kg)	m
0.5	258 (6,553)	60 (1,524)	98 (2,489)	7,500 (3,400)	0.6
0.75	258 (6,553)	70 (1,778)	98 (2,489)	9,000 (4,082)	0.9
1.0	258 (6,553)	80 (2,032)	105 (2,667)	12,500 (5,670)	1.2
1.5	276 (7,010)	100 (2,540)	118 (2,997)	19,000 (8,618)	1.7
2.0	290 (7,366)	120 (3,048)	120 (3,048)	23,000 (10,433)	2.2
2.5	290 (7,366)	140 (3,556)	126 (3,200)	27,000 (12,247)	2.7
3.0	290 (7,366)	164 (4,165)	132 (3,353)	35,000 (15,876)	3.2

*** Custom sizes and designs available upon request**

3DP Machine Data

Size	Dry Weight	Belt Width	Grav.	Pres.	Feed Box Drive	Belt Wash Water Volume	Pressure	(80psi boost) Motor
m	lb (kg)	m	hp	hp	hp	gpm	psi	hp
0.5	7,000 (3,180)	0.6	1	1	0.33	26	120	5
0.75	8,000 (3.630)	0.9	1	2	0.33	42	120	7.5
1	9,700 (4,400)	1.2	1	2	0.33	53	120	7.5
1.5	17,300 (7.855)	1.7	2	3	0.33	75	120	10
2.0	24,000 (10,900)	2.2	3	5	0.33	98	120	10
2.5	28,000 (12,715)	2.7	5	7.5	0.33	120	120	15
3.0	36,300 (16,480)	3.2	5	10	0.33	142	120	15

Note: These numbers are preliminary only and based on 10ft long gravity zone.

A Leader in Solids Dewatering.

BDP Industries began fabricating equipment over 30 years ago. BDP is an OEM supplier of solids dewatering equipment for several prestigious Fortune 500 companies. With over 650 installations throughout the world, and a 40,000 square-foot manufacturing facility, BDP Industries has evolved into one of the most modern and complete solids dewatering suppliers in the world.

BDP Industries produces a range of high quality products and services:

- Gravity Belt Thickeners
- Belt Presses
- Screw Presses
- Rotary Drum Concentrators
- Lime Stabilization Systems
- Polymer Systems
- Compost Turning Equipment
- Pulp & Paper Stock Thickeners
- Plate & Frame Presses
- Conveyors
- Process Control Panels
- Equipment Restoration
- On-Site Service
- Mobile Dewatering Demonstrations

BDP INDUSTRIES

P.O. Box 118
354 State Route 29
Greenwich, NY 12834
TEL: (518) 695-6851
FAX: (518) 695-5417

www.bdpindustries.com

This document is a general product presentation and is not a guarantee of any kind. All the information contained herein is subject to change without notice. Directions for use and safety will be given separately.

1.5m 3DP mobile trailer unit

We're located near you.

Your local BDP representative:

Route 29 Greenwich, New York 12834
Phone No 518-695-6851
Email:kelly@bdpindustries.com

Date: November 8, 2013 Page: 1 of 6

To: Brown and Caldwell

Attn: John Bratby, PhD, P.E.
Vice President
303-239-5452
JBratby@brwncald.com

From: Kelly Brown

Re: Bench Testing Results for Dewatering Application

BDP Industries performed a bench scale analysis of the sludge sample received from Betasso WTP. Results of both the Belt Press testing testing are tabulated below.

Process Description

The Betasso has an average flow of 35 MGD and receives water from the Barker and Lakewood reservoirs outside of Boulder, CO. Betasso uses aluminum sulfate for coagulation and then has four large sedimentation basins. The sludge from the sedimentation basins will be fed to either a separate thickener or directly to the 3DP press. The sedimentation basin could vary from 0.2 to 0.7%.

The existing sedimentation basins use atmospheric drying or in the past contracted with Parker Ag Corporation to dewatering with belt presses. Parker Ag's mobile unit is a 1 m model 3DP Belt Press.

Sample Collection

Brown and Caldwell, communicating with Josh Queen of Goble Sampson collected sludge samples from the sedimentation basins. The sample was used to run bench testing completed at BDP for % solids as shown in Table 1. Each sample was tested individually for proper polymer selection, optimal polymer dosage and cake solids.

Polymer Screening

Each sludge sample was agitated in a 5 gallon bucket and put into 200 mL sample cups. Each sludge sample was screened for the most effective polymer agent. The screened

Route 29 Greenwich, New York 12834
Phone No 518-695-6851
Email:kelly@bdpindustries.com

polymers included both cationic and anionic charges, and both dry and emulsion products. Various molecular weights and charge densities where screened. All emulsion polymers were made down at a 0.25% solution and are 40% active ingredient. All dry polymers were made down at 0.25% solution and are 100% active. The most effective polymers were Hychem 302 and 306 anionic dry polymers. Depending on the time of year and the sludge characteristic, either of the above dry polymers will work effectively.

Table 1: Belt Press Bench Test Results

Feed Solids	Polymer Dosage	Discharge Cake	Polymer Type	Solids Loading	Solids Capture
(%)	(active lb / dry ton)	(%wt)	I.D. #	(lb / hr / meter)	(%)
0.7	4 - 8	15 – 17	302	350 – 600	95+
0.7	5 – 9	14 – 16	306	350 – 600	95+

Table 2: Thickening Test Results

Feed Solids	Polymer Dosage	Discharge Cake	Polymer Type	Solids Loading	Solids Capture
(%)	(active lb / dry ton)	(%wt)	I.D. #	(lb / hr / meter)	(%)
0.7	4	5%	302	350 – 600	95+
0.7	5	5%	306	350 – 600	95+

Extrapolation of Test Data:

The theoretical relationship between feed solids and solids loading is as follows:

$$W1 \times (1-S1/Sc)/(1-S2/Sc) = W2$$

Where:
W1 or W2 is the lb/hr per meter at feed influent conditions 1 or 2,
S1 or S2 is the influent concentration at conditions 1 or 2
Sc is the discharge concentration.

Using the above equation at the dilute feed concentration of 0.2% the expected performance is as indicated below;

Route 29 Greenwich, New York 12834
Phone No 518-695-6851
Email:kelly@bdpindustries.com

Extrapolated Thickening Performance:

Feed Solids	Polymer Dosage	Discharge Cake	Polymer Type	Solids Loading	Solids Capture
(%)	(active lb / dry ton)	(%wt)	I.D. #	(lb / hr / meter)	(%)
0.2	4	5%	302	300 – 520	95+
0.2	5	5%	306	300 – 520	95+

S-wrap Simulation

Once each type sludge sample was properly conditioned and gravity drained, the pressure section of the press was simulated with the BDP bench tester belt press unit. This unit consists of a single drive roller and single tension roller with variable speed and variable belt tension. By varying the belt speed and pressure setting on the unit, each roll diameter of the 3DP can be simulated. This provides the time under pressure to demonstrate the expected cake solids that will be obtained by the 3DP unit.

The bench test simulator was operated at 10 ft/min at 20 to 70 PLI belt tensions to obtain the cake solids listed in Table 1. Each sample was optimized to provide excellent cake release, solids capture and rapid filtrate drainage. All five cake samples were tested for percent solids on an O'haus test unit, as well as via Standard Method in a 104 degree Celsius oven, with the results listed in Table 1.

Discussion of Results

Testing was performed on October 18, 2013 and the results are summarized in the table above. The sample was found to be 0.73% solids by weight with a pH of 7.1. The filtrate from the Belt Press dewatering process was of high quality, indicating a very good solids capture ratio. The sample pressed well and showed very good release from the belt fabric, even at moderate belt tensions. A direct correlation was identified between the amount of polymer and the percent solids of the discharge. A slightly higher polymer dosage, for each of the polymers tested, would expect to yield the higher range of discharge solids concentrations and the cleanest filtrate.

Route 29 Greenwich, New York 12834
Phone No 518-695-6851
Email:kelly@bdpindustries.com

Parker AG Contract Dewatering Performance

The company Parker Ag has in the past dredged the ponds at this plant utilizing their mobile dewatering equipment which is a 1.0 meter model 3DP Belt Press manufactured by BDP. The employee of Parker Ag that ran this operation now works for BDP Industries:

Robert Domenico, BDP Industries, Inc.
Mobile: (303) 818-8094
E-mail: Robert@bdpindustries.com

Robert indicates that the typical performance on this sludge with the 1.0 meter mobile unit was as follows:

- Hydraulic Loading: 100gpm
- Solids Loading @1% 500b/hr
- Polymer Dosage: 5 to 9lb/ton
- Discharge Cake Solids: 15%

This agrees well with the above test results.

Options and Recommendations from Bench Testing

During the bench testing BDP was able to demonstrate the capabilities of proper sludge conditioning with polymers to mechanically dewater the varying blends that can be encountered at the Betasso WTP. Based on the bench testing and reviewing the overall plant operation, the following recommendations and options should be considered.

a) Polymer Dosage – The polymer used for the bench testing was dry polymer. BDP recommends either two 750 gallon batch tanks or an automatic dry polymer feed system.
b) Press Capacity – The 3DP press will be capable of processing the varying sludge at the capacities listed below.

Table 3: Belt Press Bench Test Results

Size	GPM	#/hr,m	Expect cake Solids
Summer	145	500	15 to 17%
Winter	145	500	14 to 16%

Route 29 Greenwich, New York 12834
Phone No 518-695-6851
Email:kelly@bdpindustries.com

Table 4: Thickening Bench Test Results, extrapolated to 0.2% influent

Size	GPM/m	#/hr,m	Expect cake Solids
Summer	410	410	5%
Winter	410	410	5%

c) Sludge Conditioning – BDP recommends two venturi in-line mixers. This will allow two different polymer products to be added in the sludge line at the same time providing optimal flexibility to properly condition the sludge.
d) Sludge Pumps – The sludge pumps supplied to feed the belt press must be progressive cavity pumps capable of 50 PSI discharge pressure to provide adequate inlet pressure to the venture mixers. It is also recommended that the pump speed be and less than 300 RPM as the material is abrasive.
e) Room Layout – BDP can supply various room layouts depending on the size and quantity of units purchased.

Please see pictures below of the actual tests and the sludge samples produced.. We at BDP are excited to work you on this project. Please do not hesitate to contact us with any questions, comments or concerns.

Sincerely,

Kelly Brown
BDP Industries

cc A.J. Schmidt, BDP Industries
Josh Queen, Goble Sampson

Route 29 Greenwich, New York 12834
Phone No 518-695-6851
Email:kelly@bdpindustries.com

Picture 1: Solids with polymer added to facilitate flocculation

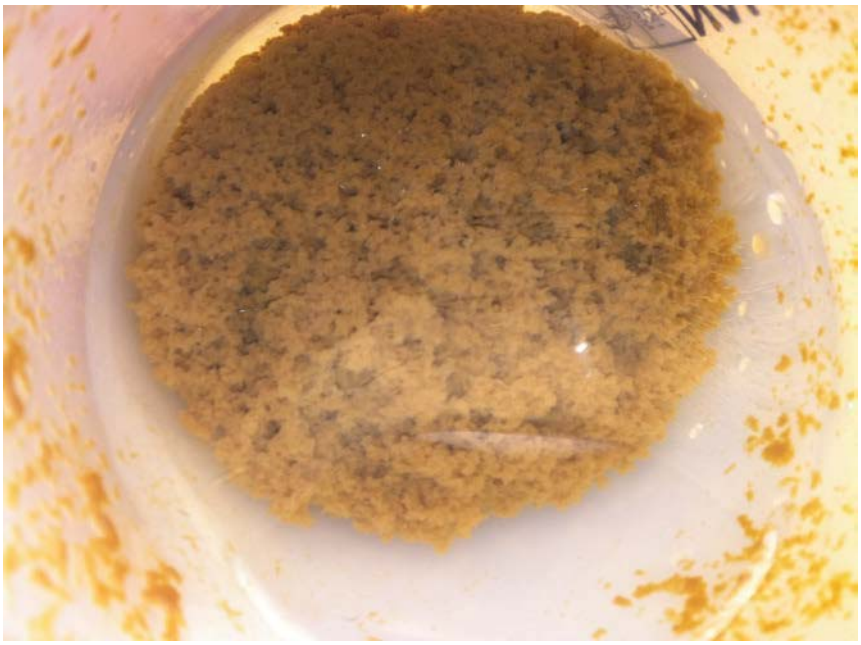

Picture 2: Drainage test

Route 29 Greenwich, New York 12834
Phone No 518-695-6851
Email:kelly@bdpindustries.com

Picture 3: Solids after independent gravity drainage

Picture 4: Sample in the belt press test unit

Route 29 Greenwich, New York 12834
Phone No 518-695-6851
Email:kelly@bdpindustries.com

Picture 5: Filtrate from dewatering test

Picture 6: Discharge cake after the bench test press unit.

BDP Industries would like to stress that a bench scale test is based on a single grab sample. The sample may not be perfectly representative of future operating conditions. Therefore, ranges are provided for expected results based on the single sample tested.

Attachment D: Charter Machine Company

DATE: November 18, 2013

TO: Brown and Caldwell

PROPOSAL: Charter Machine Company (CMC)
Proposal No. 131118-BB2

PROJECT: Boulder, Colorado

SUBJECT: Charter Machine Gravity Belt Thickener

We are pleased to offer the following equipment of our manufacture and supply for your consideration relative to the above subject project.

Item 1

One (1) Charter Machine Gravity Belt Thickener, Model RB812.3 with 1.2 meter belt width, manufactured to achieve the sludge dewatering process performance requirements. All Gravity Belt Thickener electrical functions will be factory wired to numbered terminals in a frame mounted 304 Stainless Steel NEMA 4X junction box. The machine will be shipped totally assembled. Also included will be one (1) upstream conditioning device consisting of a 304 Stainless Steel in-line adjustable orifice venturi type mixer, complete with polyethylene injection ring. The Gravity Belt Thickener will be totally preplumbed, requiring one (1) sludge feed connection; one (1) polymer feed connection, one (1) plant water connection and one (1) pneumatic connection. The above includes 304 SS feed hopper, containment seals, filtrate pans, belt supports, belt wash system, discharge hopper and hardware. The main frame will be hot dipped galvanized to a minimum of 5 mil.

Item 2

One (1) Wash Water Booster Pump, to provide water to the belt filter press belt wash stations. The booster pump will come complete with galvanized base and integrally mounted to a maximum 7.5 Hp TEFC motor. The controls for the wash water booster pump will be located in the gravity belt thickener control panel.

Item 3
One (1) Air Compressor, receiver mounted, for air supply to the filter press belt tensioning, belt tracking, doctor blade positioning and pneumatic plow grid-lifting systems. The air compressor shall be a single stage compressor driven by a 1.5 Hp TEFC motor and capable of supplying 5.3 cfm air delivered at 120 psi. Air compressor shall be Emglo model K15E17. Controls for the air compressor will be mounted in the gravity belt thickener control panel.

Item 4
One (1) Gravity Belt Thickener Electrical Control Panel, totally factory wired to numbered terminal strips and including all necessary components for the automatic or manual operation of the belt thickener system. Components will include pushbuttons, lights, relays, switches, transformers, fuses, alarms and starters to perform the necessary control functions as specified. The control panels will be NEMA 4X, 304 stainless steel, hinged front access, with Allen-Bradley MicroLogix 1400 PLC's and completely factory assembled and tested.

Item 5
The services of a factory trained representative for the purposes of installation inspection; startup and operator training will be provided for a period not to exceed ***five (5) days on site and to be completed in two (2) trips.***

Additional service may be requested at a rate of $120 per hour, plus all travel and living expenses.

Please note that Charter Machine Company includes a factory sludge test to optimize polymer selection prior to startup. A 5-gallon sludge sample is required. Testing is to be coordinated through Charter Machine Company's service department

Please Note:
Except as otherwise noted herein, the following are not included in our offering:

Installation or off-loading, local, state or federal taxes, permits, or other fees, wiring, conduit or plumbing between items, anchor bolts, local motor disconnects or lockouts, polymer for startup or operation, platforms, walkways, or handrails.

Warranty:
Our equipment shall be warranted against defects in workmanship and materials for a period of ***eighteen (18)*** months after delivery or ***twelve (12)*** months after acceptance, whichever comes first. The BFP frame, supports, rollers and roller coatings shall be warranted for ***three (3) years*** after acceptance. Bearings and bearing housings shall be warranted for ***five (5) years*** after acceptance. Belt life will be warranted for ***four thousand (4000) hours.*** These warranties are based upon compliance with Charter Machine Company's handling, storage, installation, startup, operating and maintenance procedures.

Final Information and Pricing:
We propose to furnish the above described equipment for the Total Lot Net Selling Price of **$140,000.00 ,** F.O.B. shipping point, with full truck freight allowed to the jobsite.

Unless otherwise specified our standard payment terms are 100%-30 days. Other terms and conditions apply per the attached sheet. Late payments shall be subject to a 1.5% per month finance charge.

Early shipments of embedded metal work can possibly be made however there will be an additional charge of the lowest ground freight rate available to the purchaser.

Early shipments and partial shipments will be invoiced as shipped on a prorated basis to be determined by CMC.

Unless otherwise specified this proposal is offered for acceptance for (60) sixty days and is subject to review thereafter. Pricing is firm based upon receipt of a Purchase Order within this (60) sixty-day period. Delays in shipments caused by slow return of submittals or other delays caused by the contractor, owner, owner's agents or engineer may result in additional charges of 1% per month.

Submittal Schedule:
Approval submittals can be forwarded approximately **4-6 weeks** after our receipt and acceptance of your purchase order.

Delivery Schedule:
Shipment of the equipment can be made approximately **12-14 weeks** after our receipt of approval and your release to manufacture.

These lead times are based upon typical Engineering and Shop loading, which may vary to some degree.

Offering Basis:
Please note that our offering, as described herein, is based upon Charter Machine Company's plans and specification. Should the contents of any addenda (or other applicable documents) have an effect on our offering, we must reserve the right to modify that offering (and pricing) accordingly. We request your assistance in keeping us abreast of all changes to the contract documents.

OPTION A:
Roedos Model L – 2 Polymer Preparation / Feed System, shall be capable of metering, diluting, and activating an emulsion polymer with water. This system shall be capable of controlling separately the water flow and the polymer injection dosage, and shall be furnished as a complete assembled unit. The polymer system shall be approved and be the responsibility of the Belt Filter Press/Gravity Belt Thickener manufacturer.

One (1) polymer feed pump to provide mixed polymer solution to the polymer injection points. The pump will be a full range, end suction centrifugal type as manufactured by Goulds, and will be driven by an AC motor.

All L-2 polymer system controls will be located in its own NEMA 4X, FRP enclosure. A common power feed cord shall also be furnished. The polymer system power shall be 15 amps at 120 volts, single phase, powered by others.

ADDER---- $14,000.00 - EACH

Further information can be obtained through the office of our manufacturer's representative in the jobsite area:

isiWest
4175 Mulligan Drive
Longmont, Colorado
970-535-0571 (PH)

We wish you success on this project and look forward to the opportunity of working with you.

Very truly yours,

Charter Machine Company

William Wright
William Wright

Attachments

The standard in Gravity Belt Thickener design.

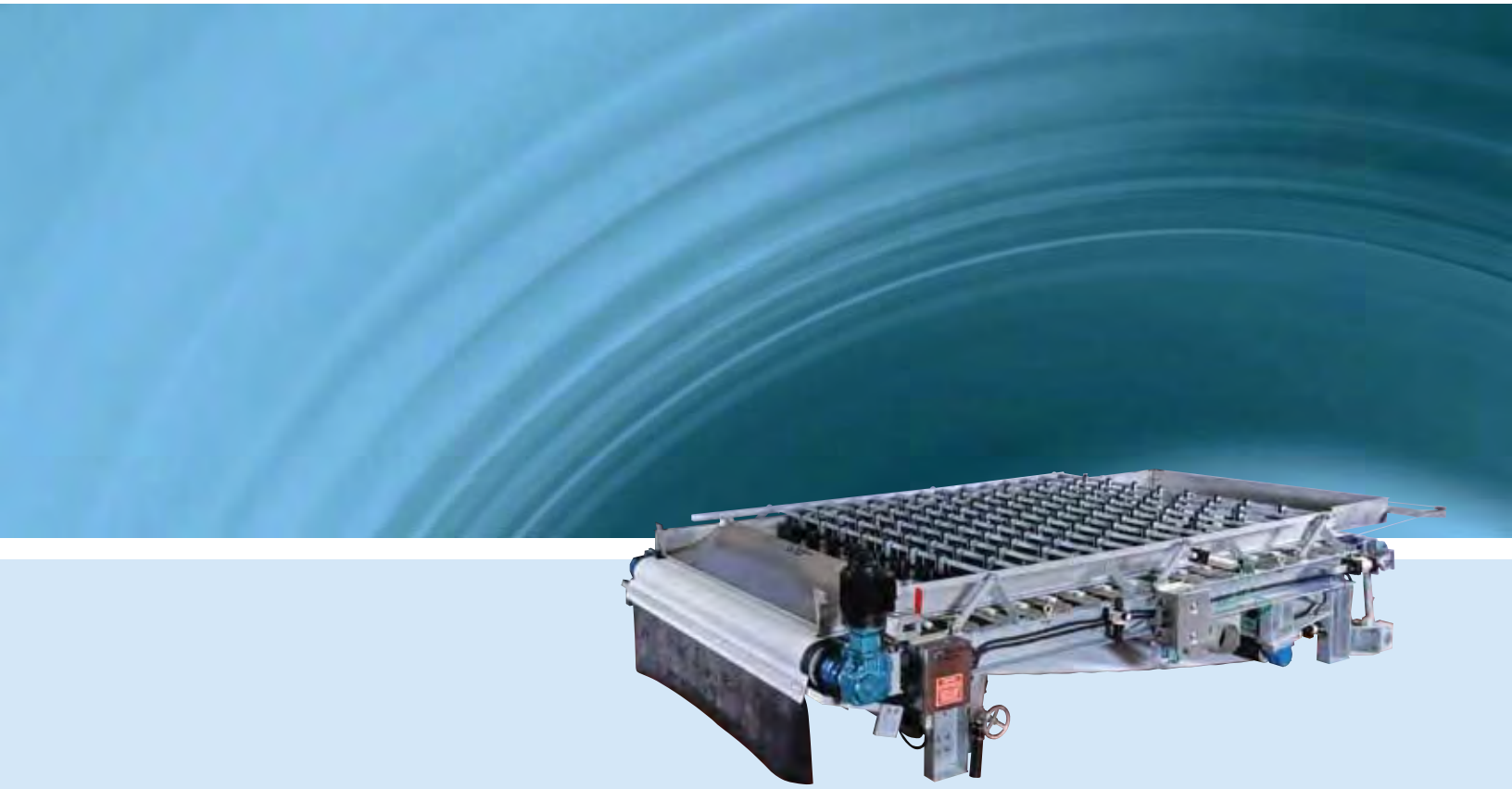

CharterMachine Company

The Premier Gravity Belt Thickener for y

Although some people consider Gravity Belt Thickeners to be "basically the same," we at Charter Machine Company respectfully disagree. We believe our design and construction provides the premier Gravity Belt Thickener available and encourage you to compare our features and benefits against any other GBT in the marketplace.

Intelligent design. Robust construction.
Belt alignment is a major concern regarding GBTs. CMC has addressed this issue with their center-pivot alignment design. By pivoting in the center of the unit, both sides of the unit are adjusting simultaneously. This reduces the potential for blinding, extends belt life and makes corrections faster and smoother.

CMC utilizes self-aligning double-roll spherical bearings with a quadruple lip seal. The solid pillow-block housings and mounting pads are machined in-house to ensure absolute parallelism.

Standard frame construction is hot-dipped galvanized MC channel with stainless steel flock tank, trays, chutes, containment sides and hardware. Complete stainless steel units in 304 or 316 are available upon request. CMC offers four sizes of GBT: 1.2 meter, 1.7 meter, 2.2 meter and 3.2 meter.

Built-in simplicity.
Belt alignment and belt tensioning are pneumatically controlled. This provides a cleaner and easier system to maintain. Our unique plow-grid assembly eliminates the need to manually lift and lower each row of plows. All bearings and drives are easily accessible while the open design allows for easy clean up after completing a run.

All control panels are stainless steel, manufactured in-house and can be customized to meet any requirements of the facility. CMC also offers a filtrate-recycling feature that can be utilized in the belt wash system to minimize water consumption.

Durability that's guaranteed.
CMC's design, materials of construction and fabrication provide tangible benefits. Our belts are guaranteed for 4,000 hours, twice as long as most other GBT suppliers. All bearings and bearing housings are guaranteed for the life of the unit. Our center-pivot design maintains even belt stretch providing a more consistent performance over the life of the belt. The units are manufactured in our 100,000 sq. ft. manufacturing facility in Metuchen, New Jersey where a complete inventory of spare parts is available for immediate shipment. Our engineering department and sales force would welcome the opportunity to address any questions or provide information.

CMC utilizes Rilsan Nylon coated one-piece pillow block bearing housings with gasketed end cap. Self-aligning double-row spherical bearings with quadruple lip seals. All bearings provided on Charter Machine Gravity Belt Thickener are guaranteed for the life of the equipment.

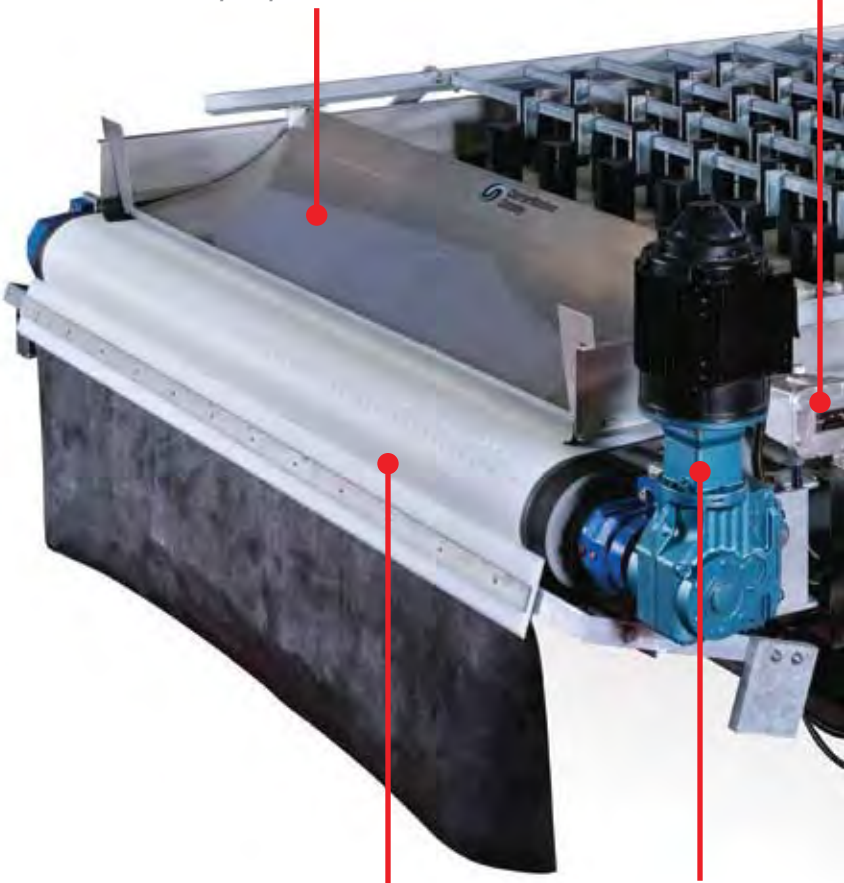

Variable-Speed Belt Drive

Drive and tracking roller are coated with 60 durometer synthetic rubber while the tensioning roller is coated to the point of insertion by the Rilsan Nylon Fusion Bonded Process.

TYPICAL SLUDGE CHARACTERISTICS	APPROX. SLUDGE FEED (% D.S.)	APPROX. THICKENED SLUDGE (% D.S.)	VOLUME REDUCTION (%)	CAPTURE RATIO (%)
Aerobically Digested	1.5–3.0	4.5–6.5	70	98–99+
Anaerobically Digested	2.0–5.0	4.5–10.5	55	98–99+
Primary + WAS	1.5–5.0	4.5–8.0	70	98–99+
Primary	2.5–7.5	7.5–12.5	70	98–99+
Waste Activated	0.5–1.5	4.5–6.0	90	98–99+
Coal Refuse	5.0–10.0	20.0–45.0	80	97–99+

our Municipal and Industrial Applications

Individually adjustable UHMW polyethylene plows are free floating but properly weighted to always maintain contact with the belt. More rows and more plows increase belt exposure to allow filtrate to escape.

Pneumatic actuator lifts or lowers entire plow assembly for easier cleaning, eliminating manually lifting each row of plows.

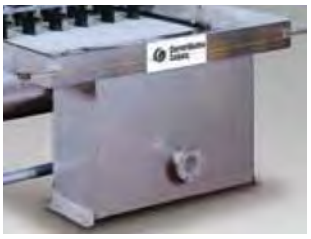

Integral flocculation tank levels flow onto belt and provides ease of observation.

Pneumatically controlled rigid tensioning assembly adjusts and maintains belt tension with parallel movement for extended belt life.

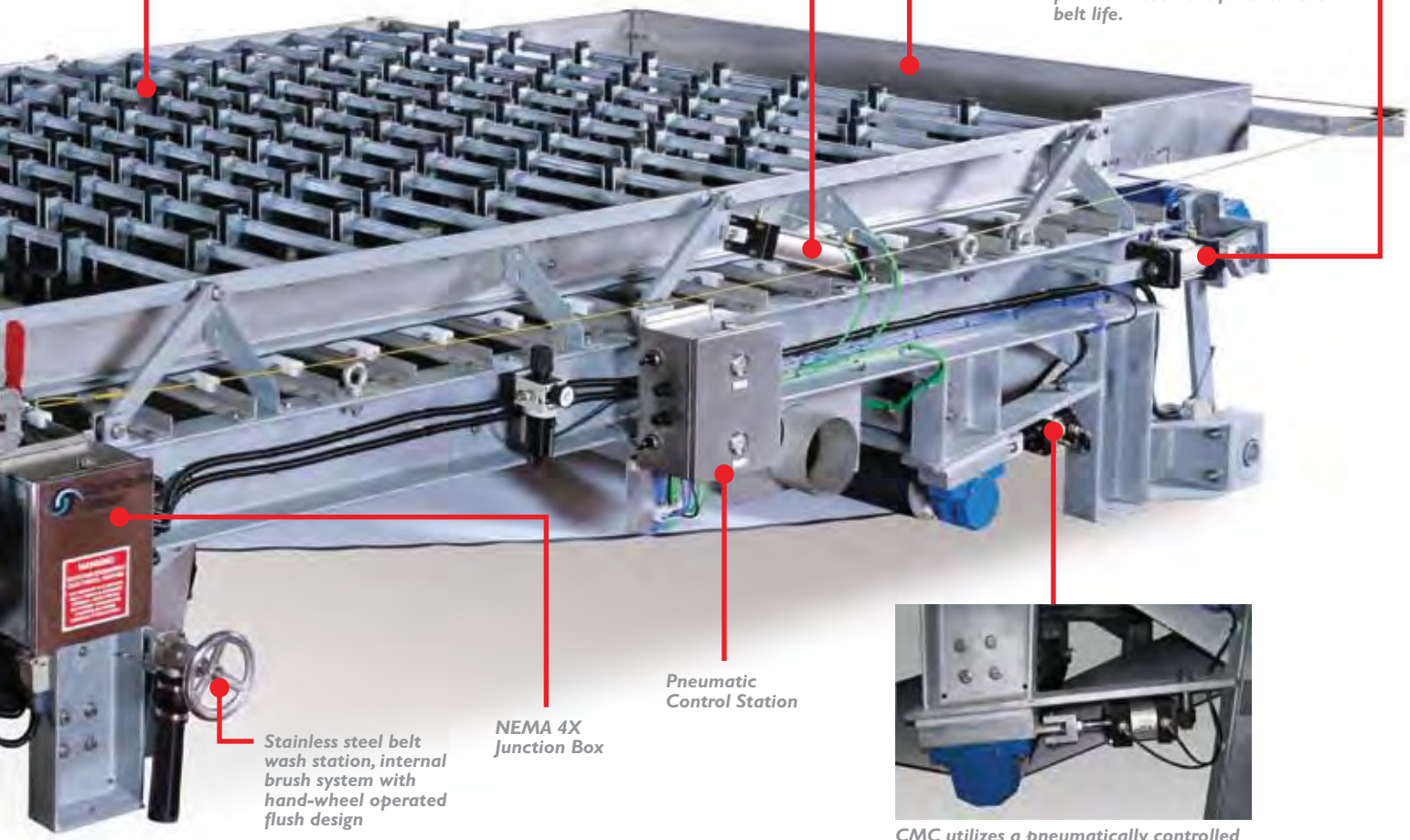

Stainless steel belt wash station, internal brush system with hand-wheel operated flush design

NEMA 4X Junction Box

Pneumatic Control Station

CMC utilizes a pneumatically controlled center pivot alignment system. This design reduces belt stretching, lengthens belt life and provides a more consistent performance over the life of the belt.

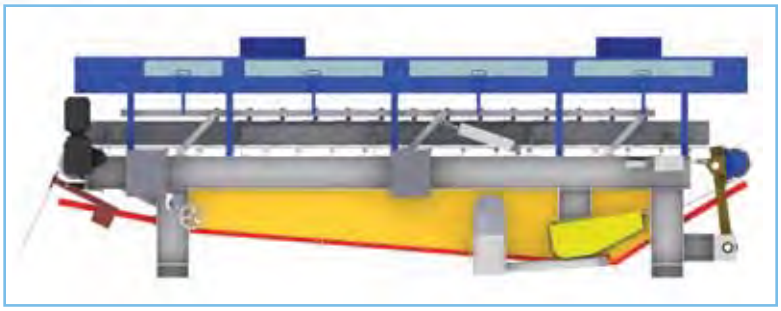

CMC's enclosed unit positions the stainless steel hood near the gravity deck to control odor while still allowing visual inspection. This design also promotes easier cleaning and maintenance.

Over four decades of precision machine manufacturing.

We're Charter Machine Company, and for years we've manufactured and serviced the best designed and finest performing sludge thickening and dewatering equipment under the Roediger Pittsburgh name.

Recently, Charter Machine Company acquired the rights to Roediger Pittsburgh. Today we offer the same exceptional equipment and service under our own name, Charter Machine Company.

Now you can be sure that the name on your equipment is the company that built it – and stands behind it.

Custom solutions.
Sludge varies, and so are the facilities that handle it. Charter Machine Company offers custom solutions designed to meet your needs, whether it is stainless steel units to mobile dewatering trailers. With our in-house staff of design engineers and complete control over the fabrication we are able to make modifications so the equipment you order is perfectly suited to your operation.

Parts ready to ship.
Occasionally our equipment will need servicing. At Charter Machine Company we maintain a complete inventory of replacement parts ready for immediate shipment. Assistance is a phone call away with help in troubleshooting and problem solving.

Total System Responsibility.
Charter Machine Company specializes in dewatering. Our staff of expert technicians can assist you in every aspect from sludge testing to design assistance to equipment start-up and training. We manufacture polymer systems and conveyors in addition to the dewatering units to provide total system responsibility. We strive very hard to meet all your dewatering needs and would welcome the opportunity to be of service.

CharterMachine Company

55 Wester Avenue, Metuchen, New Jersey 08840
732-494-5350 • FAX 732-494-4596 • www.chartermachine.com

SUGGESTED SPECIFICATIONS

ROEBELT GRAVITY BELT THICKENER

CHARTER MACHINE COMPANY

RB 812.3 - 1.2 METER BELT WIDTH

TABLE OF CONTENTS

SECTION	DESCRIPTION	PAGE
1.	GENERAL	3
2.	DESIGN CRITERIA	3
3.	GRAVITY BELT THICKENER MAIN FRAME	3
4.	FLOCCULATOR	3
5.	FLOCCULATION TANK	4
6.	GRAVITY DEWATERING ZONE	4
7.	CAKE DISCHARGE ZONE	4
8.	ROLLERS	4
9.	ROLLER BEARINGS AND SEALS	5
10.	BELT TENSIONING	5
11.	BELT TRACKING	6
12.	PNEUMATIC CONTROL SYSTEM	6
13.	BELT WASH STATION	6
14.	FILTER BELT	7
15.	THICKENER DRIVE AND MOTOR	7
16.	FACTORY WIRING	7
17.	SAFETY FEATURES	7
18.	ELECTRICAL CONTROL PANEL	8
19.	UTILITY REQUIREMENTS	8
20.	SUMMARY OF CONSTRUCTION MATERIALS	13
21.	FIELD SERVICE	14
22.	OPTIONAL FEATURES	14

1. GENERAL

The gravity belt thickener furnished under this contract shall comply with the following specifications which are based upon time proven design. That design combines high strength structural integrity, extensive material longevity, minimal maintenance and utility requirements, and state of the art process resulting in superior overall performance.

2. DESIGN CRITERIA

2.1 Number of gravity belt thickeners required:

2.2

Model No.	Belt Width Minimum	Width Overall	Length Overall	Height Overall
RB 812.3	1.2m	81¼"	235"	57"

2.3 The gravity belt thickener shall be Charter Machine Company:

Model - RB 812.3

2.4 Mechanical and structural design shall meet the requirements detailed hereafter.

3. GRAVITY BELT THICKENER MAIN FRAME

3.1 Main frame design is crucial, as it is the support structure of the entire machine. The main frame shall be constructed of welded and bolted MC10 X 22 channels conforming to ASTM Specification A36 and sized such that, during installation and under conditions of operational loading, the deflection of any frame member shall exceed 0.01". The frame safety factor is greater than 21.8.

3.2 Main frame coating is crucial to the protection of the gravity belt thickener. All frame members shall be prepared and coated according to ASTM A123, hot dip galvanized to a minimum 5 mil thickness. All frame members shall be drilled and machined, and all bolted connections shall be disassembled prior to galvanizing.

4. FLOCCULATOR

4.1 The gravity belt thickener shall be furnished with an upstream sludge-conditioning device consisting of an inline adjustable orifice venturi type mixer complete with polymer injection device. The mixer shall be designed to condition the sludge with polymer to result in a degree of flocculation that will produce the greatest amount of dewatering while maintaining the highest quality filtrate.

4.2 Location of the flocculation device will vary with the application. Several locations may be specified with the unused locations plumbed with spool pieces.

5. FLOCCULATION TANK

5.1 A sludge-conditioning tank shall be located at the feed end of the gravity belt thickener. The flocculation tank shall have a minimum capacity of 100 gallons and provide a uniform flow of sludge onto the full width of the dewatering belt.

5.2 The flocculation tank shall be fabricated from 11 gauge, type 304 stainless steel.

6. GRAVITY DEWATERING ZONE

6.1 The gravity-dewatering zone shall consist of a 16-foot section of the horizontal filter belt. The minimum dewatering area shall be, 50.8 square feet.

6.2 A type 304 stainless steel chute, integral to the flocculation tank shall distribute sludge onto the horizontal dewatering belt.

6.3 The sludge shall be contained on the belt by type 304 stainless steel side channels with neoprene seals.

6.4 A grid of UHMW polyethylene wear bars shall support the dewatering belt.

6.5 Model RB 812.3. Thickened sludge shall gently be turned by,
49 individually adjustable sludge plows evenly spaced along fourteen (14) rows. The sludge plows shall be constructed of polyethylene and be free floating to ride on the filter belt.

6.6 The complete plow assembly can be raised away from the filter belt for cleaning purposes by operating a 4-way pneumatic hand valve.

7. CAKE DISCHARGE ZONE / DISCHARGE HOPPER

7.1 A counterweighted doctor blade shall be mounted at the discharge roller for removing sludge cake from the belt. The doctor blade shall be constructed of UHMW polyethylene. The blade shall be rigidly reinforced to provide even, gentle pressure on the belt with a minimal amount of abrasiveness and shall be capable of providing passage clearance for the belt seam without injuring that seam.

7.2 The thickener shall discharge thickened sludge into a type 304 stainless steel flanged hopper connection.

7.3 A rubber diaphragm shall be incorporated into the side of the thickened sludge discharge hopper. As the sludge level in the hoppers rises, the rubber diaphragm shall flex and make contact with a limit switch. This limit switch shall be used to control operation of a thickened sludge discharge pump.

8. ROLLERS

8.1 All rollers shall be designed for a deflection of less than 0.05" at mid span under conditions of maximum operational loading. Maximum operational loading shall be defined as the sum of the belt tension load; friction loads; equipment and sludge loads; any loads induced by the elasticity of the belt; and any loads induced by the torque of the drive. Maximum roll deflection shall be (in) 0.0018” which is calculated using the belt tension of 50 PLI, and the drive torque of 1,960 inch pounds.

8.2 All rollers shall be of stub shaft design with each stub secured by an end plate and an internal bulkhead. Assembly of rollers, shafts, end plates, and bulkheads shall be of machined concentricity and by means of continuous weld.

8.3 The drive and tracking roller shall be coated with a minimum 3/8" thick synthetic rubber of 60 durometer to provide the friction required for efficient belt drive and tracking. The tensioning roller shall be coated to the point of insertion of the bearing with Rilsan Nylon II to a thickness of 25 mil by the Electro Static, Fusion Bonded Rilsan Powder Dispersion Process.

8.4 Minimum roll safety factor shall be 35.17.

9. ROLLER BEARINGS AND SEALS

9.1 Roller bearings shall have an L-10 rating greater than 77,000,000 hours per AFBMA test procedure under maximum loading conditions and calculated at a belt speed of 20 meters per minute. All bearings shall be double row spherical roller type and greasable with grease fittings located for servicing from the machine exterior. Bearings shall have quadruple lip contact seals.

9.2 All bearing housings shall be class 30 cast iron one-piece pillow block type with gasketed end cap as manufactured by Charter Machine Company. Bearing housings shall be coated by a two part epoxy base coat primer of four (4) mil dry film thickness and two (2) finish coats of two part epoxy at four (4) mil per coat dry film thickness.

9.3 All roller bearings shall be guaranteed for the life of the thickening equipment.

10. BELT TENSIONING

10.1 Belt tensioning shall be maintained pneumatically and controlled from the thickener mounted pneumatic control center.

10.2 The dewatering belt shall be tensioned by a pair of noncorrosive pneumatic cylinders attached to a rigid tensioning assembly. The tensioning assembly shall be attached to each tensioning cylinder in such a way as to assure parallel movement of the tensioning roller.

10.3 Belt tension adjustment shall be possible while the machine is in operation.

Tensioning pressure shall be gauged at the pneumatic control center. Tensioning cylinders shall be power retractable for belt replacement and emergency detensioning.

10.4 The tensioning arrangement shall accommodate a minimum of 4 inches in belt length increase throughout the anticipated belt life.

11. BELT TRACKING

11.1 Belt tracking shall be totally pneumatic and shall function as a continuous automatic belt guidance system. The belt shall be tracked by a type 304 stainless steel paddle arm and analog system sensor which monitors one edge of the belt and pneumatically signals a noncorrosive pneumatic cylinder for corrective positioning when required. That corrective motion shall be smooth, minimal, and adjustable.

11.2 The belt tracking assembly shall be center pivoting complete with bearings to minimize dewatering belt stretch and wear.

12. PNEUMATIC CONTROL SYSTEM

12.1 All belt thickener pneumatic system controls, belt tensioning, tracking, and sludge plow grid control shall be frame mounted on the thickener in a 304 S/S NEMA 4X enclosure. Low air alarm switch, tensioning and plow grid lift valves shall be mounted inside the enclosure. Tensioning on/off and plow grid lift levers, tension gauges, and adjustment controls shall extend through the enclosure wall for easy access. The enclosed controls shall be preceded by a three (3) micron air filter/regulator with gage and a 0.1 micron oil coalescing filter. One (1) 1/4" female NPT supply air connection shall be required to the total pneumatic system. Lubrication of the pneumatic system is not required.

12.2 Should plant air not be available for the belt tracking and tensioning system, each gravity belt thickener shall be furnished with a receiver mounted single stage air compressor. The unit shall be complete with 17 gallon ASME Code receiver rated for 200 psi, pressure gauge, automatic overload protector, intake air filter-muffler, pressure switch, safety valve, tank drain, outlet valve, and constant speed regulator. The motor shall be 1.5 HP, squirrel cage, TEFC with 1.15 service factor.

13. BELT WASH STATION

13.1 The filter belt shall be equipped with a belt wash station for constant belt washing. The belt wash station shall include a manifold with removable stainless steel nozzles, internal handwheel operated brush, handwheel operated flush valve, and stainless steel neoprene skirted enclosure for containing spray mist. Belt spray water shall be collected in the stainless steel enclosure and plumbed to the base sump. Spray nozzles shall be suitable for use with non-potable water with a maximum solids concentration of 200 mg/l without clogging.

13.2 A washwater booster pump shall be provided and neatly installed near the thickener. The pump shall be centrifugal type with replaceable wear rings and shall be plumbed into the belt wash system by the Contractor. G&L model SSH-C, 2.0 hp.

14. FILTER BELT

14.1 The filter belt shall be of polyester monofilament wovenware with minimum tensile strength of 890 pounds per lineal inch. Belt edges shall be chamfered and sealed. The belt seams shall be type 316 stainless steel clipper type. Mesh shall be selected for optimal gravity dewatering of the pertinent sludge.

14.2 Replacement of filter belt shall be accomplished without any disassembly of any part of the gravity belt thickener except the belt seam.

15. THICKENER DRIVE AND MOTOR

15.1 The drive shall be Variable Frequency Drive using AC motor and quadruple gear speed reducer. The inverter along with start/stop and speed control of the drive shall be located in the gravity belt thickener control panel.

15.2 The drive motor shall be a severe duty, TEFC, type motor of ample power for starting and operating under normal conditions without exceeding the nameplate horsepower. The drive motor shall have a service factor of 1.15.

15.3 All electrical controls of the gravity thickener shall be in the thickener control panel.

16. FACTORY WIRING

16.1 All equipment and components shall be factory wired using non-metallic, flexible liquid-tight conduit and fittings wired to numbered terminal blocks in a frame mounted NEMA 4X junction box. All conduit shall be run and secured inside the MC channel frame wherever possible.

17. SAFETY FEATURES

17.1 Each gravity belt thickener shall be equipped with a lanyard type safety switch with cable encircling the thickener at an easily accessible height.

17.2 The belt tracking system shall have a limit switch on each side of the thickener that shall shut down the system in the event of belt tracking failure.

17.3 The belt tensioning system shall have a limit switch that shall shut down the system in the event of total belt failure.

17.4 Each pneumatic control center shall have a pressure switch that shall shut down the system in the event of low air pressure.

18. ELECTRICAL CONTROL PANEL

1. General Requirements: Each gravity belt thickener shall be provided with a control panel that will contain the necessary control devices and equipment for controlling the dewatering process as described herein. The control panel shall meet the following general requirements:

   a. The control panel shall accept a 460 volts, 60 hertz, 3-phase ac power input. A main disconnect circuit breaker and operator mechanism shall be included. When the disconnect is in the open position, all power shall be removed from the control system.

   b. IEC rated motor starters shall be provided for the air compressor, and the belt wash water booster pump.

   c. Variable frequency drive (VFD) shall be provided for the belt drive, sludge feed pump and thickened sludge discharge pump.

   d. Short circuit protection for each motor shall be accomplished utilizing fuses. Individual thermal overload protection shall be provided (except for the belt drive, sludge feed pump and thickened sludge discharge pump).

   e. A control power transformer shall be included that will provide 120 volts, ac control power to the system.

   f. An industrial programmable logic controller (PLC) located in the control panel shall perform all logic functions for the system.

   g. A CONTROL POWER ON/OFF switch shall be located on the front of the control panel. When in the ON position, the CONTROL POWER ON pilot light will be illuminated and control power shall be distributed to the control system. When in the OFF position, the control system shall be held de-energized.

   h. An EMERGENCY STOP pushbutton shall be located on the control panel. It shall be a mushroom head style pushbutton that when depressed shall immediately de-energize all moving equipment in the system.

   i. An alarm horn shall be included with the control panel for audible alarm annunciation along with a horn silencing button in the front of the panel.

2. Control and Pilot Devices: As a minimum, the following control and pilot devices shall be located on the front of the control panel with nameplates as worded below in UPPERCASE LETTERS:

a. Pushbuttons:

(1) AUTO START
(2) AUTO STOP
(3) SYSTEM RESET
(4) ALARM SILENCE
(5) AIR COMPRESSOR START
(6) AIR COMPRESSOR STOP
(7) WASHWATER PUMP START
(8) WASHWATER PUMP STOP
(9) BELT DRIVE START
(10) BELT DRIVE STOP
(11) SLUDGE PUMP START
(12) SLUDGE PUMP STOP
(13) POLYMER SYSTEM START
(14) POLYMER SYSTEM STOP
(15) THICKENED SLUDGE DISCHARGE PUMP START
(16) THICKENED SLUDGE DISCHARGE PUMP STOP

b. Selector Switches:

(1) THICKENER HAND/OFF/AUTO MODE
(2) CONTROL POWER ON/OFF
(3) THICKENED SLUDGE DISCHARGE PUMP HAND/AUTO

c. Indicator Lights:

(1) PREWET CYCLE ON
(2) POSTWASH CYCLE ON
(3) AIR COMPRESSOR RUNNING
(4) WASHWATER PUMP RUNNING
(5) BELT DRIVE RUNNING
(6) SLUDGE PUMP RUNNING
(7) POLYMER SYSTEM RUNNING
(8) THICKENED SLUDGE DISCHARGE PUMP RUNNING
(9) HIGH DISCHARGE HOPPER LEVEL
(10) LOW AIR PRESSURE
(11) BELT OVERTRAVEL
(12) BELT BROKEN

(13) LOW POLYMER

d. Speed Potentiometers:
   (1) SLUDGE PUMP SPEED
   (2) BELT DRIVE SPEED
   (3) THICKENED SLUDGE DISCHARGE PUMP SPEED

3. Signal Input and Output Devices:

   a. Discrete Input Signals: The control panel shall receive the following discrete input signals from normally open dry contacts in external devices (contacts close when the equipment runs or a fault occurs):

      (1) POLYMER SYSTEM RUNNING
      (2) POLYMER SYSTEM FAIL

   b. Discrete Output Signals: The control panel shall provide the following discrete signals for transmission using normally open dry contacts (contacts close when the equipment is called to run or a fault occurs):
      (1) GRAVITY BELT THICKENER RUNNING
      (2) GRAVITY BELT THICKENER FAULT

4. Sequence of Operation:

   a. Automatic Mode of Operation:
      (1) The gravity belt thickener may be operated in the automatic mode by placing the HAND/OFF/AUTO selector switch in the AUTO position. The operator will next press the AIR COMPRESSOR START pushbutton and allow the pressure to reach normal operating level.

      (2) After the air pressure has reached operating level, the operator will press the AUTO START pushbutton, this will energize the washwater pump and belt drive, illuminate the PREWET CYCLE ON pilot light and start the pre-wet time delay. After the pre-wet timer times out, the sludge pump, polymer system, and the thickened sludge discharge pump will be energized.

      (3) Pressing the AUTO STOP pushbutton will de-energize the sludge pump and polymer system, illuminate the WASHDOWN CYCLE ON pilot light and start a washdown

time delay. After the washdown timer has timed out, the belt drive, washwater pump, and the thickened sludge discharge pump will be de-energized.

b. Manual Mode of Operation

(1) To operate the thickener in the manual mode, the operator will place the HAND/OFF/AUTO selector switch in the HAND position. The operator will next start the air compressor by pressing the AIR COMPRESSOR START pushbutton. After the air pressure has reached operating level, start the washwater pump by pressing the WASHWATER PUMP START pushbutton.

(2) The operator will not proceed until the belts are allowed to be fully tensioned. No interlock shall be provided to prevent the operator from starting the belt drive in the manual mode. Pressing the BELT DRIVE START pushbutton will energize the belt drive. At this time, the operator will start the thickened sludge discharge pump by pressing the THICKENED SLUDGE DISCHARGE PUMP START pushbutton, the sludge pump by pressing the SLUDGE PUMP START pushbutton and the polymer pump by pressing the POLYMER SYSTEM START pushbutton.

(3) The system will be stopped by pressing the respective STOP pushbutton in the reverse order stated above.

5. Faults:

a. When any of the following fault conditions occur, in automatic or manual mode, the appropriate fault indicator will be illuminated, the alarm horn will sound and the gravity belt thickener and associated equipment will be de-energized:

(1) LOW AIR PRESSURE (amber light)
(2) BELT OVERTRAVEL (amber light)
(3) BELT BROKEN (amber light)
(4) LOW POLYMER (amber light)
(5) HIGH DISCHARGE HOPPER LEVEL (amber light)
(6) BOOSTER PUMP FAULT (flashing run light)
(7) BELT DRIVE FAULT (flashing run light)
(8) SLUDGE PUMP FAULT (flashing run light)
(9) THICKENED SLUDGE DISCHARGE PUMP (flashing run light)

6. Components:

a. Enclosures: Control panel enclosures shall be free-standing, fabricated of type 304 stainless steel and shall be suitable for NEMA 4X service. Enclosures shall be manufactured by Saginaw Manufacturing.

b. Wiring: All power and control wiring shall be 600 volt, type SIS insulation stranded copper and shall be sized for the required load, 14 AWG minimum.

c. Circuit Breakers: Circuit breakers for the main disconnect shall be thermal magnetic molded case units. Circuit breakers shall be Square D, Class 650, Type FAL.

d. Motor Starters: Motor starters shall be full voltage, nonreversing, IEC style across-the-line units. Coils shall be 120 volts ac. Siemens type Sirius 3RT10.

e. Selector Switches: All selector switches shall be heavy duty, corrosion resistant units rated for NEMA 4X service. Contact blocks shall be rated for 10-ampere continuous service. Selector switches shall be Idec Series TWTD.

f. Pushbuttons: All pushbuttons shall be heavy duty, corrosion resistant units rated for NEMA 4X service. Contact blocks shall be rated for 10-ampere continuous service. Pushbuttons shall be Idec Series TWTD.

g. Pilot Lights: Pilot lights shall be heavy duty, corrosion resistant units rated for NEMA 4X service. Units shall be 120 VAC full voltage incandescent type. Pilot lights shall be Idec Series TWTD.

h. Terminal Blocks: Terminal blocks shall be high density, solderless box lug style, with 600-volt rating. Terminal blocks shall be Allen Bradley type 1492.

i. Control Relays: Control relays shall be general purpose type with a 10 amp contact rating, miniature square base and internal on status pilot light. Relays shall be Allen Bradley Type 700-HF Series.

j. Programmable Logic Controller (PLC): The PLC shall be a modular type with discrete and analog capabilities. The CPU shall have 6K minimum RAM for user instructions. The unit shall have battery backed RAM and EEPROM backup. The PLC shall be an Allen Bradley Micrologix Type.

k. Variable Frequency Drive (VFD): The VFD shall be UL listed and shall be manufactured by Omron.

19. UTILITY REQUIREMENTS

19.1	Electrical	-	460 volt, 3 phase, 60 Hz is standard. Other power options are available.
19.2	Power Drive Unit	-	1.5 HP
19.3	Wash Water @ 85 psi (min.)		20 Gallons
19.4	Pneumatics	-	1 cfm at 80-psi min., 250 psi max.

20. SUMMARY OF CONSTRUCTION MATERIALS

20.1	Main Frame	Welded and bolted MC10 X 22 channels conforming to ASTM A36, then hot dip galvanized according to ASTM A123.
20.2	Flocculator	Stainless steel and UHMW Polyethylene
20.3	Sludge Plows	Polyethylene
20.4	Drive & Tracking Rollers	Carbon steel coated with 3/8" thick synthetic rubber, 60 durometer.
20.5	Tension Roller	Carbon steel coated with 25 mil Rilsan II Nylon.
20.6	Bearings	Double row spherical roller type.
20.7	Bearing Seals	Quadruple lip contact seals with gasketed cast iron end caps.
20.8	Pneumatic Cylinders	200 psi rating, anodized aluminum tube with stainless steel tie rods, teflon seals and graphite bearings.
20.9	Belt Tracking	Fully pneumatic analog.
20.10	Belt Tensioning	Fully pneumatic.
20.11	Belt Wash Station	Hand wheel operated internal brush type with 304 stainless steel manifold, valve, nozzles, brush, aluminum handwheel and type 304 stainless steel enclosure with neoprene seals.
20.12	Belt	Monofilament polyester weave selected for function and particular sludge. Seam is type 316 stainless steel clipper type.

20.13	Filtrate Pans	Type 304 stainless steel.
20.14	Pneumatic Plumbing	Polyethylene tubing, 120 psi work, 625 psi burst.
20.15	Doctor Blade	UHMW polyethylene
20.16	Junction Box	NEMA 4X stainless steel
20.17	Pneumatics Station	NEMA 4X stainless steel
20.18	Assembly Hardware	Type 304 stainless steel

The material selection above has been established as standard based upon a combination of operational experience and value engineering. Optional materials of construction are available at increased or decreased cost.

21. FIELD SERVICE

The manufacturer shall include the services of a factory trained field engineer for the purposes of installation inspection, equipment start-up, polymer selection, performance testing and training of plant personnel regarding proper operation and maintenance of the equipment.

22. OPTIONAL FEATURES

22.1 OPTIONAL Water Solenoid Valve, ref. Section 13.2

A solenoid valve shall be provided at the water inlet of each machine to control the flow of water to the unit.

22.2 OPTIONAL Filtrate Recycle, ref. Section 13.3

The thickener shall be plumbed to enable use of clear filtrate from the filtrate pan as well as external supply. This system functions to reduce water consumption and hydraulic loading on the treatment plant processes. Accordingly, plant water may be required only for start-up and shutdown. The wash water system shall also be valved to allow use of plant water for the belt washing functions.

A level sensor shall be furnished in the filtrate pan for maintenance of adequate Supply for the wash water booster pump and a solenoid valve shall be plumbed into the belt wash water system to control the flow of externally supplied wash water.

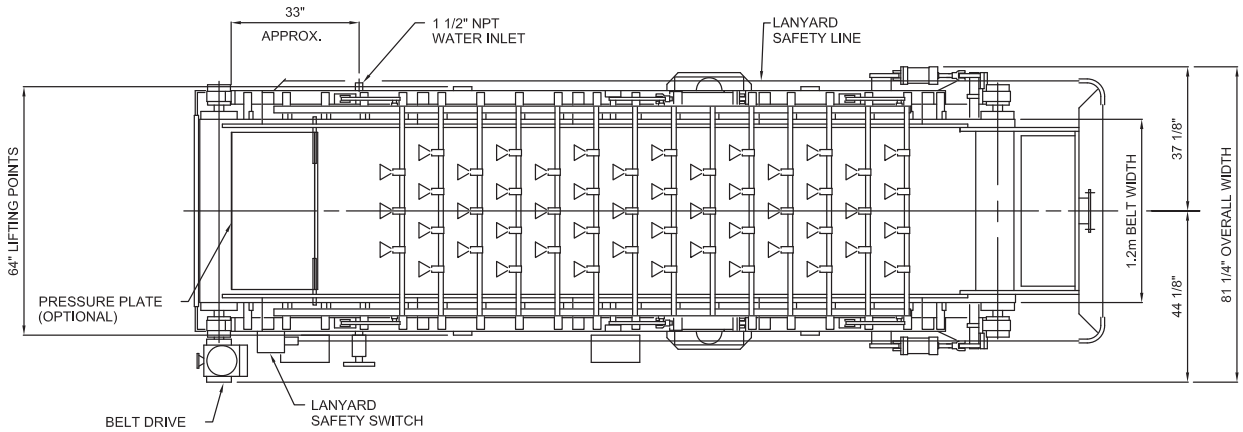

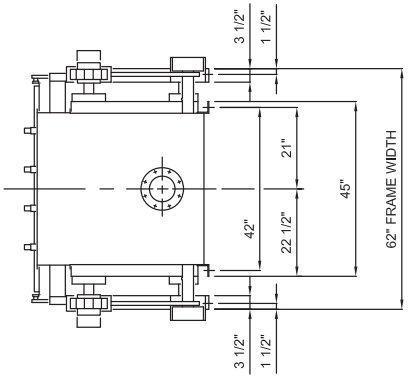

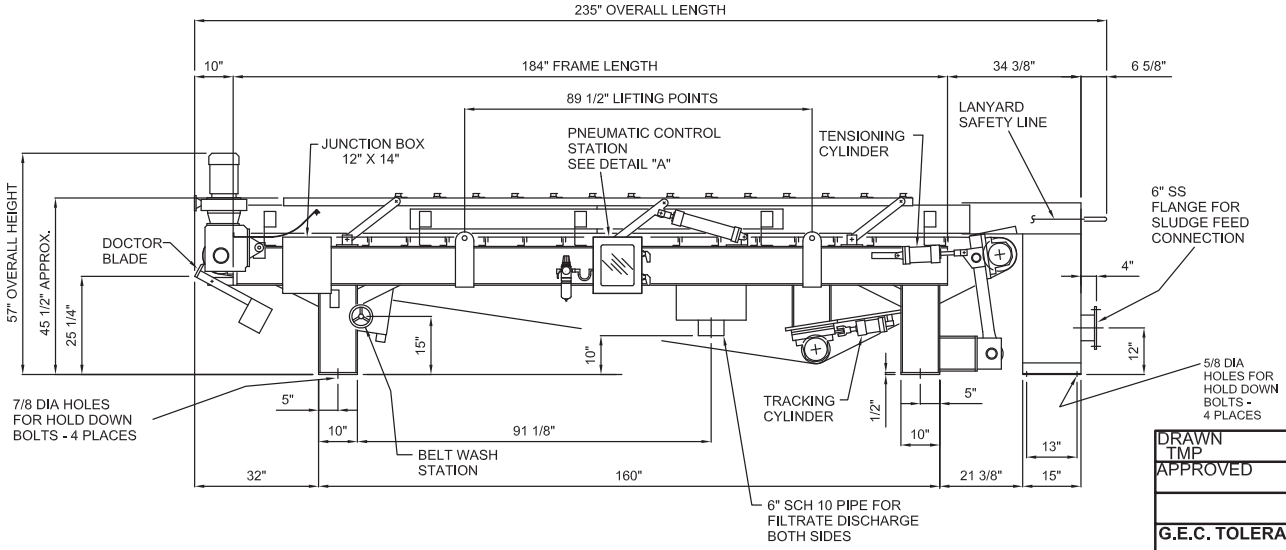

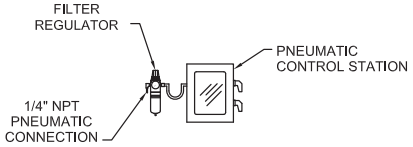

DETAIL "A"

GRAVITY DECK DRY WEIGHT	=	5150	LBS. APPROX.
GRAVITY DECK WET WEIGHT	=	5850	LBS. APPROX.
FLOC TANK DRY WEIGHT	=	185	LBS. APPROX.

DRAWN TMP	9/11/06	CHARTER MACHINE COMPANY 55 WESTER AVE METUCHEN N.J. 08840
APPROVED		
		TITLE ROEBELT 812.3 MACHINE VIEWS
G.E.C. TOLERANCES UNLESS OTHERWISE SPECIFIED FRACTIONAL DIM ±1/64 DECIMAL DIM ±.005 ANGLE ± 1/2 SURFACE FINISH 125		SIZE B / DWG NO. RB812.3-02 / REV 0 SCALE 3/8" = 1'-0" / SHEET 1 OF 1

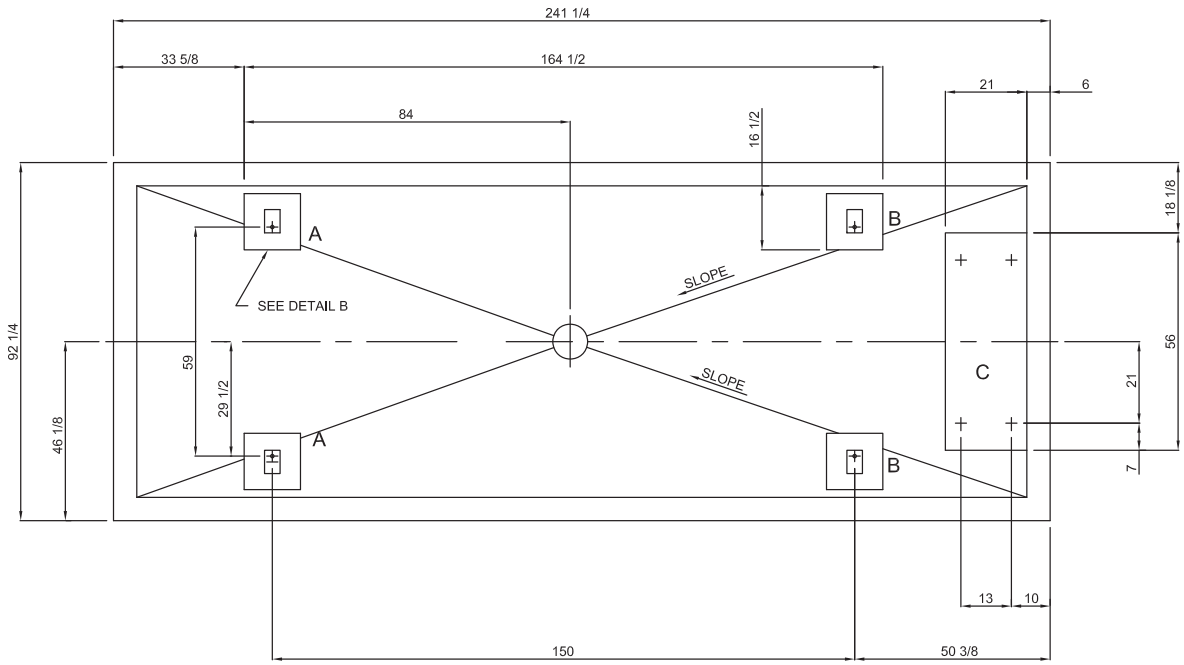

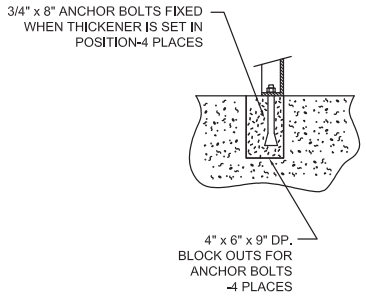

DETAIL A

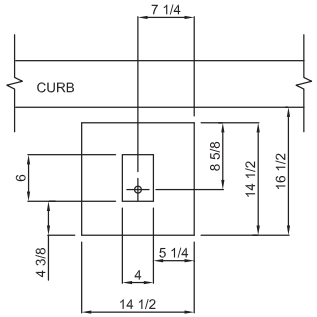

DETAIL B
NTS

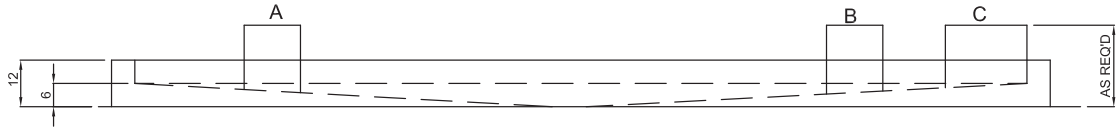

LOCATION	DRY WEIGHT	WET WEIGHT
A	1,225	1,400
B	1,350	1,525
C	185	950
TOTAL	5,350	6,800

MIN. 6" FLOOR DRAIN - CAST IN PLACE AND SET FLUSH WITH FINISHED GRADE.

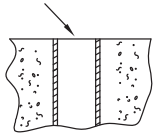

DRAWN TMP	12/20/06	CHARTER MACHINE COMPANY 55 WESTER AVE METUCHEN N.J. 08840
APPROVED		
		TITLE ROEBELT 812.3 FOUNDATION
G.E.C. TOLERANCES UNLESS OTHERWISE SPECIFIED FRACTIONAL DIM ±1/64 DECIMAL DIM ±.005 ANGLE ± 1/2 SURFACE FINISH 125		SIZE B / DWG NO. RB812.3-03 / REV 0
		SCALE 3/8" = 1'-0" / SHEET 1 OF 1

DATE: November 18, 2013

TO: Brown and Caldwell

PROPOSAL: Charter Machine Company (CMC)
Proposal No. 131118-B1

PROJECT: Boulder, Colorado

SUBJECT: Charter Machine Tower Belt Filter Press

We are pleased to offer the following equipment of our manufacture and supply for your consideration relative to the above subject project.

Item 1

One (1) Charter Machine CompanyTower Belt Filter Press, Model TP12.41S with a 1.2 meter width, manufactured to achieve the sludge dewatering process performance requirements. All belt press electrical functions will be factory wired to numbered terminals in a frame mounted 304 Stainless Steel, NEMA 4X junction box. The machine will be shipped totally assembled. Also included will be ***one (1) upstream conditioning device*** consisting of a 4 inch, 304 Stainless Steel in-line adjustable orifice venturi type mixer, complete with a polyethylene injection ring. The Belt Filter Press will be totally pre-plumbed, requiring one (1) sludge feed connection, one (1) polymer feed connection, one (1) plant water connection, one (1) air connection, and one (1) electrical connection.

Item 2

One (1) Wash Water Booster Pump, to provide water to the belt filter press belt wash stations. The booster pump will come complete with galvanized base and integrally mounted to a maximum 10 Hp TEFC motor. The controls for the wash water booster pump will be located in the belt filter press control panel.

Item 3

One (1) Air Compressor, receiver mounted, for air supply to the filter press belt tensioning, belt tracking, doctor blade positioning and pneumatic plow grid-lifting systems. The air compressor shall be a single stage compressor driven by a 1.5 Hp TEFC motor and capable of supplying 5.3 cfm air delivered at 120 psi. Air compressor shall be Emglo model K15E17. Controls for the air compressor will be mounted in the belt press control panel.

Item 4
One (1) Belt Filter Press Electrical Control Panel, totally factory wired to numbered terminal strips and including all necessary components for the automatic or manual operation of the belt filter press system. Components will include belt drive VFD, pushbuttons, lights, relays, switches, transformers, fuses, alarms and starters to perform the necessary control functions. The control panel will be 304 Stainless Steel, hinged front access, and completely factory assembled and tested.

Item 5
The services of a factory trained representative for the purposes of installation, inspection, startup and operator training will be provided for a period not to exceed ***five (5) days on-site, and to be completed in two (2) trips.***

Additional service may be requested at a rate of $120 per hour, plus all travel and living expenses.

Please note that Charter Machine Company includes a factory sludge test to optimize polymer selection prior to startup. A 5-gallon sludge sample is required. Testing is to be coordinated through Charter Machine Company's service department.

Please Note:
Except as otherwise noted herein, the following are not included in our offering:

Installation or off-loading, local, state or federal taxes, permits, or other fees, wiring, conduit or plumbing between items, anchor bolts, local motor disconnects or lockouts, polymer for startup or operation, platforms, walkways, or handrails.

Warranty:
Our equipment shall be warranted against defects in workmanship and materials for a period of ***eighteen (18)*** months after delivery or ***twelve (12)*** months after acceptance, whichever comes first. This warranty is based upon compliance with Charter Machine Company's handling, storage, installation, startup, operating and maintenance procedures.

In addition to the above warranty we are also offering a belt life warranty of 4000 hours. Roll and roll coatings wwarranty of three years and a bearing life warranty of 5 years.

Final Information and Pricing:

We propose to furnish the above described equipment for the Total Lot Net Selling Price of **$215,000.00 ,** F.O.B. shipping point, with full truck freight allowed to the jobsite.

Unless otherwise specified our standard payment terms are 100%-30 days. Other terms and conditions apply per the attached sheet.

Early shipments of embedded metal work can possibly be made however there will be an additional charge of the lowest ground freight rate available to the purchaser.

Early shipments and partial shipments will be invoiced as shipped on a prorated basis to be determined by CMC.

Unless otherwise specified this proposal is offered for acceptance for (60) sixty days and is subject to review thereafter. Pricing is firm based upon receipt of a Purchase Order within this (60) sixty-day period. Delays in shipments caused by slow return of submittals or other delays caused by the contractor, owner, owner's agents or engineer may result in additional charges of 1% per month.

Submittal Schedule:

Approval submittals can be forwarded approximately **4-6 weeks** after our receipt and acceptance of your purchase order.

Delivery Schedule:

Shipment of the equipment can be made approximately **12-14 weeks** after our receipt of approval and your release to manufacture.

These lead times are based upon typical Engineering and Shop loading, which may vary to some degree.

Offering Basis:

Please note that our offering, as described herein, is based upon Charter Machine Company's specifications. Should the contents of any applicable documents have an effect on our offering, we must reserve the right to modify that offering (and pricing) accordingly. We request your assistance in keeping us abreast of all changes to the contract documents.

Further information can be obtained through the office of our manufacturer's representative in the jobsite area:

isiWest
4175 Mulligan Drive
Longmont, Colorado
970-535-0571 (PH)

We wish you success on this project and look forward to the opportunity of working with you.

Very truly yours,

Charter Machine Company

William Wright
William Wright

Attachments

Tower Press™:

Over two decades of proven performance.

CharterMachine Company

Tower Press™ does everything a b

The Tower Press is truly the number one belt filter press for municipal and industrial applications. High cake solids, improved capture rates, greater through-put, along with long lasting performance, add up to greater efficiency and a lower overall cost of operation.

What sets Tower Press apart? EVERYTHING!

Stacked Pressure Rollers
The improved design begins with the vertical arrangement of the rolls. This enables every pressure roll to have a minimum of 205° belt wrap, which maximizes time under pressure and guarantees high cake solids.

Individual Drain Pans
This vertical arrangement allows every drop of water removed by the belts to cascade through a series of stainless steel drip pans positioned under each roller, which eliminates the rewetting of any sludge cake between the belts.

Elevated Discharge
The Tower press features an elevated discharge that's more than 6 feet from the base of the press frame making it easier to allow for conveyors or auxiliary equipment.

Center Pivot Tracking
The unique center pivot design improves belt alignment by adjusting both sides of the belt simultaneously.

The Regent™ Press offers the same features as the Tower Press, but with 15 rolls for increased cake solids.

Pneumatic Operation
Our pneumatic belt tensioning maintains consistent and even tension on the belt at all times for smooth operation and longer belt life.

One Piece Bearings
The Tower Press utilizes a one-piece pillow block housing with a gasketed end cap and self-aligning double row spherical bearings. All bearings have a quadruple lip seal.

Available Sizes
The Tower Press and Regent Models are manufactured in 0.7, 1.2, 1.7 and 2.2 meter belt widths.

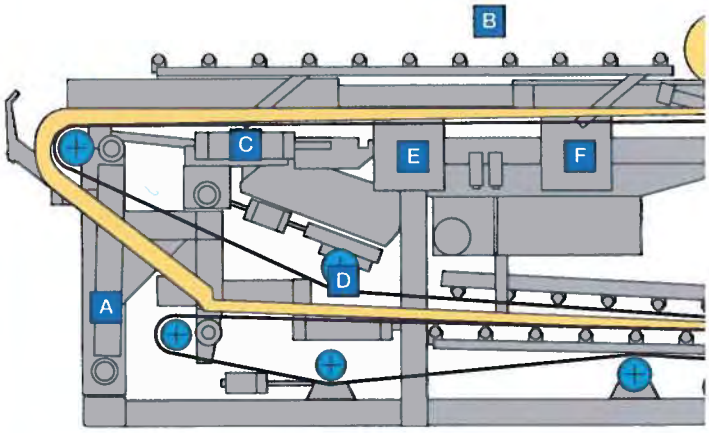

A. Pneumatically controlled rigid tensioning assembly adjusts tension with parallel movement for longer belt life.

B. Pneumatically actuated plow assembly. This eliminates manually lifting each row of plows for clean up or struggling to clear stringy material.

C. Completely pneumatic system eliminates potential for hazardous waste conditions, assures long life and facilitates smoother operation.

D. Center pivot steering adjusts belts quicker while equalizing belt stretch, producing more consistent performance and extended belt life.

E. Pneumatic control station provides easy access for adjustments and operation.

F. Junction box/local control panel

It filter press can do – only better.

How it works is innovative. How it performs is amazing.

Over the years the Tower Press has evolved in direct response to operator suggestions which has made it a better and easier to operate and maintain dewatering system.

- The Tower Press "hands-off" design reduces manpower hours and therefore overall operating costs.
- The entire dewatering process can be observed from ground level, reducing plant design and construction costs.
- Doctor blades and plows are pneumatically actuated for easier operation and clean up. Only the Tower Press and Regent Models offer this exclusive feature.
- Center pivot tracking rolls eliminate one-sided belt stretch and deliver smoother and quicker response to belt misalignment. This provides longer belt life and more consistent performance.
- Rigid tensioning assembly adjusts belt tensions with parallel movement.
- Optional filtrate recycle feature eliminates the need to utilize outside water sources for belt cleaning during operation.

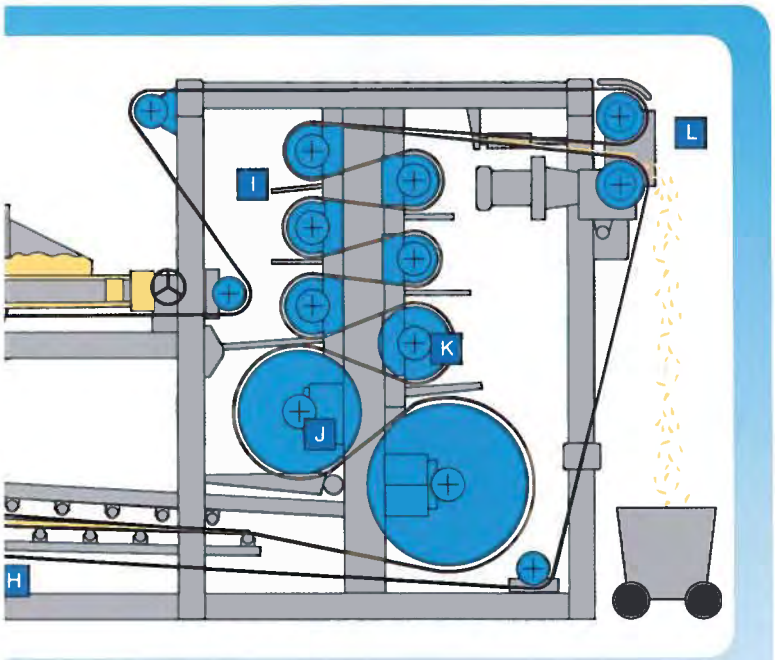

G. Fully adjustable wedge zone

H. Stainless steel belt wash system is designed for non-clogging belt spray cleaning.

I. Stainless steel drip pans under each roller eliminate rewetting of sludge cake.

J. Vertically arranged rollers provide more efficient dewatering and allows more square footage to be provided in the wedge zone.

K. Each roller in the pressure section features a minimum 205° belt wrap for maximum dry cake production.

L. High discharge allows easier installation of conveyors and lime post treatment equipment without the need for elevated pedestals.

Good things come in small packages. The 0.7 (half-meter unit) utilizes a drum instead of a gravity deck to minimize its footprint. Now even the smallest plant can afford belt filter press technology.

CharterMachine Company

www.chartermachine.com

Gravity Belt Thickeners, Horizontal Presses, 3-Belt Presses, Sieve Drum Concentrators, Polymer Systems, Conveyors and Lime Post Treatment equipment also available.

Over four decades of precision machine manufacturing.

We're Charter Machine Company, and for years we've manufactured and serviced the best designed and finest performing sludge thickening and dewatering equipment under the Roediger Pittsburgh name.

Recently, Charter Machine Company acquired the rights to Roediger Pittsburgh. Today we offer the same exceptional equipment and service under our own name, Charter Machine Company.

Now you can be sure that the name on your equipment is the company that built it – and stands behind it.

Custom solutions.
Sludge varies, and so are the facilities that handle it. Charter Machine Company offers custom solutions designed to meet your needs, whether it is stainless steel units to mobile dewatering trailers. With our in-house staff of design engineers and complete control over the fabrication we are able to make modifications so the equipment you order is perfectly suited to your operation.

Parts ready to ship.
Occasionally our equipment will need servicing. At Charter Machine Company we maintain a complete inventory of replacement parts ready for immediate shipment. Assistance is a phone call away with help in troubleshooting and problem solving.

Total System Responsibility.
Charter Machine Company specializes in dewatering. Our staff of expert technicians can assist you in every aspect from sludge testing to design assistance to equipment start-up and training. We manufacture polymer systems and conveyors in addition to the dewatering units to provide total system responsibility. We strive very hard to meet all your dewatering needs and would welcome the opportunity to be of service.

CharterMachine Company

55 Wester Avenue, Metuchen, New Jersey 08840
732-494-5350 • FAX 732-494-4596 • www.chartermachine.com

CharterMachine Company

Your Complete Source for Dewatering Equipment.

SENTRY PRESS

The next generation of ***3-belt press*** from Charter Machine Company.

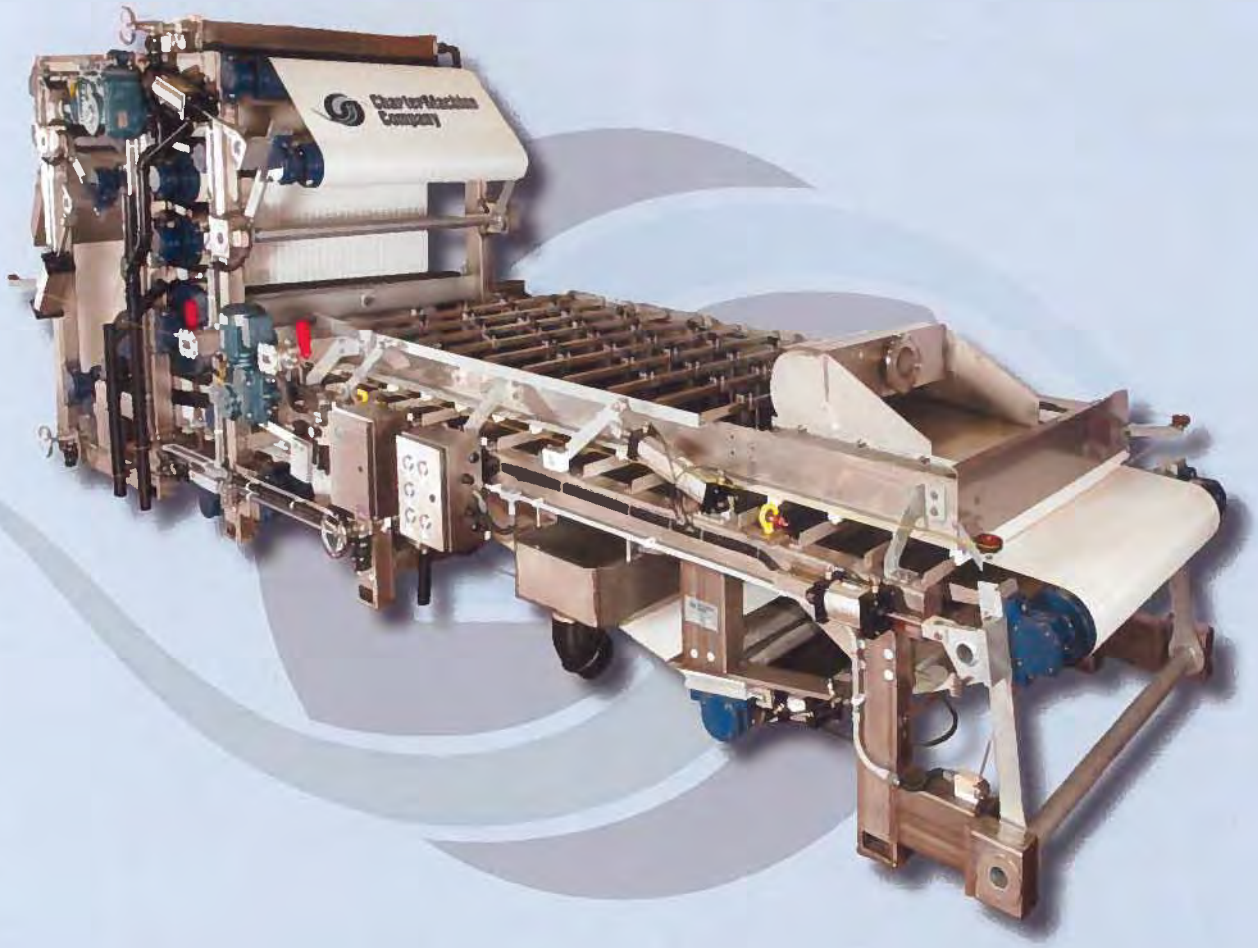

Utilizing ROEDIGER technology

The Sentry Press The next generation of 3

Charter Machine's Model Sentry Three Belt Press has been engineered for **paramount functionality** to handle the highest flow rates at thin feed concentrations, providing maximum cake dryness. The sentry press combines its user friendly features, high quality construction and in house staff and support to contribute to lowering overall cost of operation.

Sentry Press: the same great features of the Tower Press ...and even more!

Stacked Pressure Rollers

CMC incorporates our tower press arrangement of rollers manufactured since the early 1980's into the sentry design. This enables every pressure roll to have a minimum of 205 degree belt wrap, which maximizes time under pressure and guarantees high cake solids.

One Piece Bearing Housing

The Sentry Press utilizes a one-piece pillow block housing with a gasketed end cap. All bearing housings are coated with a minimum 10 mil thickness of Rilsan Nylon utilizing the electro static fusion bonding process.

Individual Drain Pans

The vertical Arrangement allows every drop of water removed by the belts to cascade through a series of stainless steel drip pans positioned under each roller, which eliminates the rewetting of any sludge cake between the belts.

Elevated Discharge

The Sentry Press features an elevated discharge that's more than 6 feet from the base of the press frame making it easier to allow for conveyors or auxiliary equipment.

Charter Machine Company offers various sizes to meet your needs:

1.2 meter
1.7 meter
2.2 meter
3.2 meter

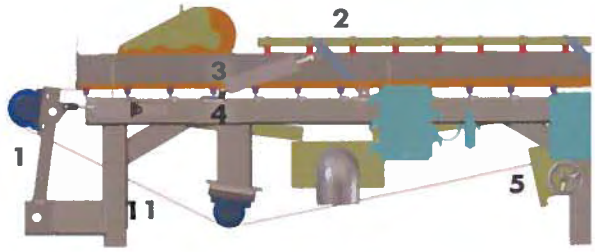

1. **Pneumatically controlled rigid tensioning assembly adjusts and maintains belt tension with parallel movement for extended belt life.**
2. **Independent Gravity Zone containing individually adjustable UHMW polyethylene plows free floating but properly weighted to always maintain contact with the belt More rows and more plows increase belt exposure to allow filtrate to escape.**
3. **Pneumatic actuator lifts or lowers the entire assembly plow grid for easier cleaning, eliminating manually lifting each row of plows.**
4. **Gravity Belt Thickener portion of combined 3 belt unit can b lengthened or shortened to accommodate facility footprint or to suit process needs.**
5. **Stainless steel belt wash station, internal brush system with hand-wheel operated flush design.**
6. **Vertical Pressure Zone with Vertically arranged rollers provide more efficient dewatering and allows more square footage to be provided in the wedge zone.**

belt press from Charter Machine Company.

How it works is innovative. How it performs is amazing.

Charter's three belt technology allows independent speed control regarding the gravity deck area versus the sheer/pressure zone. Thus overcoming the difficulties in selecting through-put capacity or discharge cake solid concentration that standard two belt technology faces. The low profile gravity zone, tubular steel frame, open frame design, and pneumatic operation all prove for easier viewing, operation, and maintenance.

Unique Features and How They Work

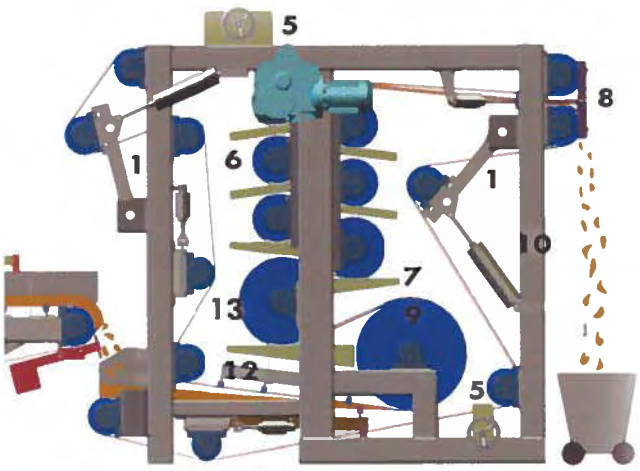

Stainless steel drip pans under each roller eliminate rewetting of sludge cake.
High discharge allows easier installation of conveyors and lime post treatment equipment without the need for elevated pedestals.
The Perforated Roll has a unique design and stainless steel construction which improves dewatering and structural strength of roll.
Tubular Frame Construction is available in 304 or 316 stainless steel.
CMC utilizes a pneumatically controlled center pivot alignment system. This design reduces belt stretching, lengthens belt life and provides a more consistent performance over the life of the belt.
Fully adjustable wedge zone.
Each roller in the pressure section features a minimum 205 degree belt wrap for maximum dry cake production.

Center Pivot Tracking
The unique center pivot design improves belt alignment by adjusting both sides of the belt simultaneously. This promotes even stretching over the entire length of the belt and provides more constant performance during the life of the belt.

Positive Pressure Wedge Zone
Sentry Press employs an adjustable wedge zone capable of providing positive pressure on both belts.

Bearing and Shaft Design
All bearings are self aligning double roll spherical roller type and provided with quadruple lip seals. All shafts are machined and polished. Each shaft is held in place with a lock ring to guarantee alignment and eliminate any slippage or misalignment that can occur with other arrangements.

Pneumatic Design
The pneumatic design provides a clean and easy to maintain system. The anodized aluminum cylinders with stainless steel shaft, tie rods, teflon seals and graphite bearings require no lubrication. The pneumatic feature also eliminates any possibility of creating a hazardous waste condition.

Charter's BP 8000 Series

Three Belt Press

- Independent gravity zone utilizing a third belt allows for higher production capacity while allowing the solids to be processed at maximum efficiency
- Provides for separate gravity dewatering function independent of the belt press operation
- Same quality features as the BP 6000 series
- Sizes available from **1.2, 1.7, and 2.2** meter belt width

Over 50 years of precision machine manufacturing.

We're Charter Machine Company, and for years we've manufactured and serviced the best designed and finest performing sludge thickening and dewatering equipment under the Roediger Pittsburgh name.

Our staff of expert technicians can assist you in every aspect from sludge testing to design assistance to equipment start-up training. We manufacture polymer systems and conveyors in addition to the dewatering units to provide total system responsibility. We strive to meet all your dewatering needs and would welcome the opportunity to be of service.

When you choose Charter Machine Company, you are choosing a quality product from a name you can trust- guaranteed.

CharterMachine Company

55 Wester Avenue Metuchen, NJ 08840 732-548-4400
FAX 732-494-4596 Email sales@chartermachine.com

Visit our website www.chartermachinecompany.com

Charter Machine Company

Your Complete Source for Dewatering Equipment.

Skid Mounted Systems

The All-In-One Solution

Save money and time with Charter Machine Company's **Sump/Skid System**:

The unit shown is our TP7.5 model. Skid mounted systems are available in all sizes and models.

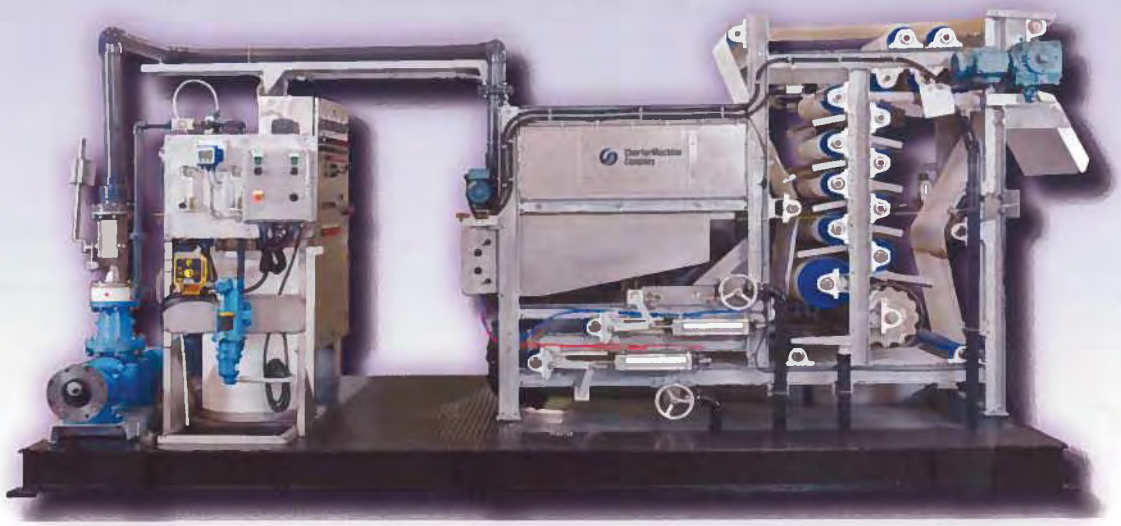

- Cost Effective - minimal contractor involvement
- Layout Design - All-In-One "plug and play" system
- Adaptable to any dewatering system or machinery
- Customized to any facilities needs
- Available in all sizes and models
- Total System Responsibility

Utilizing ROEDIGER technology

Meeting Any Clients Needs

Charter Machine offers skid mounted systems that can be customized to meet any facility's needs. Our sump/skid systems can include the belt filter press only or be a complete "plug and play" system combining any combination of sludge feed pump, compressor, booster pump, in-line mixer, polymer system, conveyors, and control panel.

Unit shown is our TP7.4 model complete on sump/skid, included is main control panel, Charter L2:1 Polymer System, air compressor booster pump, sludge feed pump, and retention manifold.

TOTAL SYSTEM RESPONSIBILITY

CMC strives to provide all-inclusive service for your dewatering needs. To achieve that goal we offer competitively-priced polymer systems and plant-specific, customized conveyors to compliment our numerous dewatering units.

We welcome the opportunity to be of service to you in all aspects of the dewatering process to save you time and money.

Watch Your Profits Stack Up...

CharterMachine Company

55 Wester Avenue Metuchen, NJ 08840 732-548-4400 FAX 732-494-4596 Email sales@chartermachine.com

NOTE: MINIMUM 20 GPM @ 30 PSI
WATER SUPPLY REQUIRED

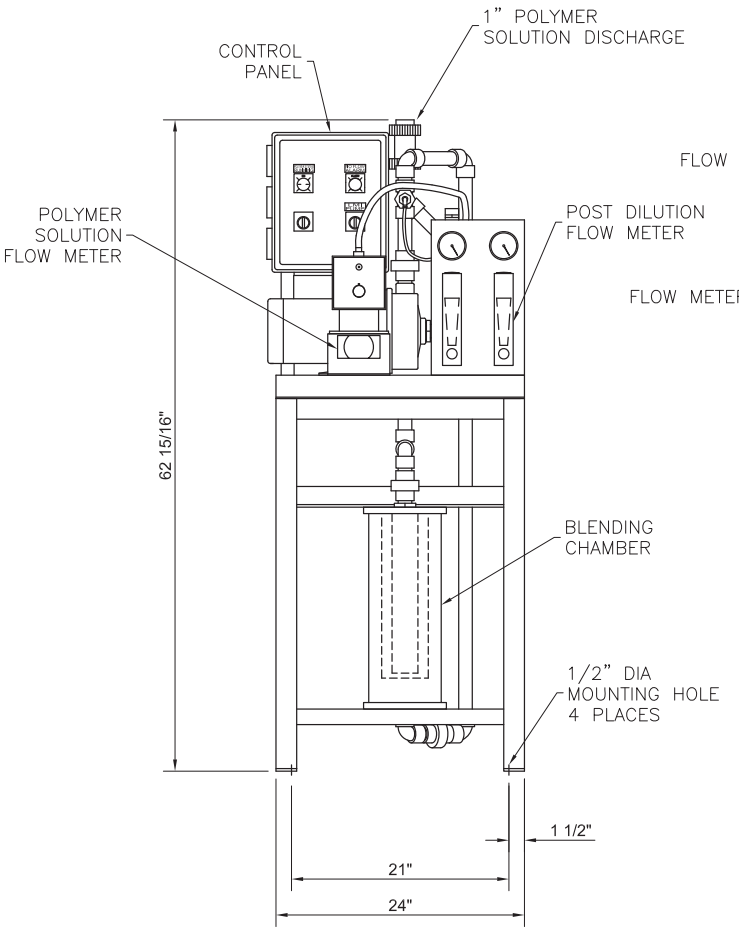

FRONT

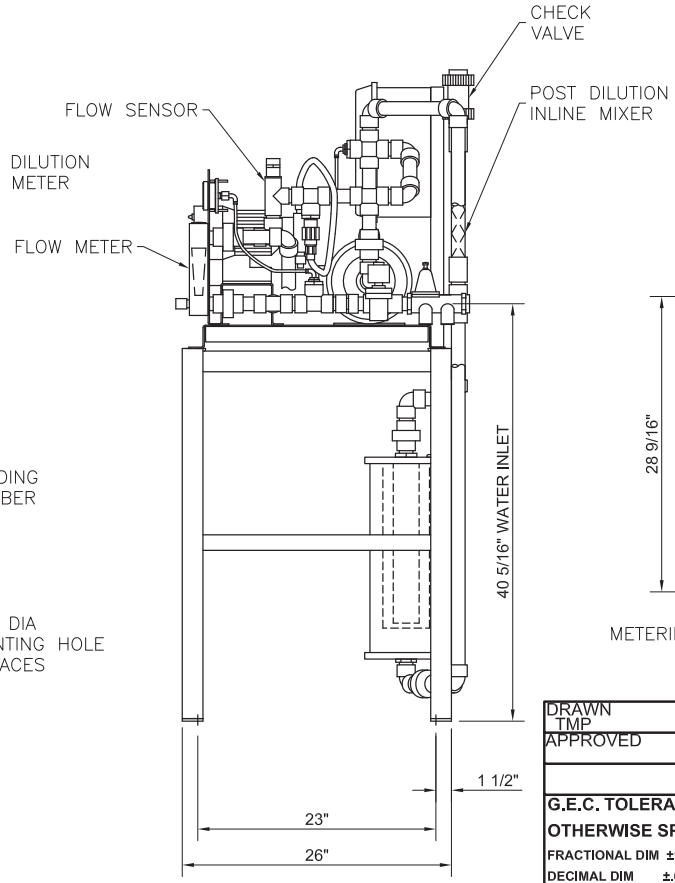

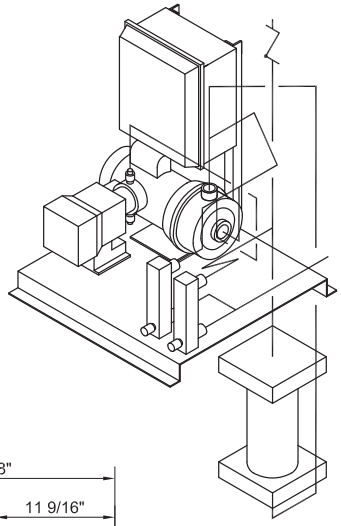

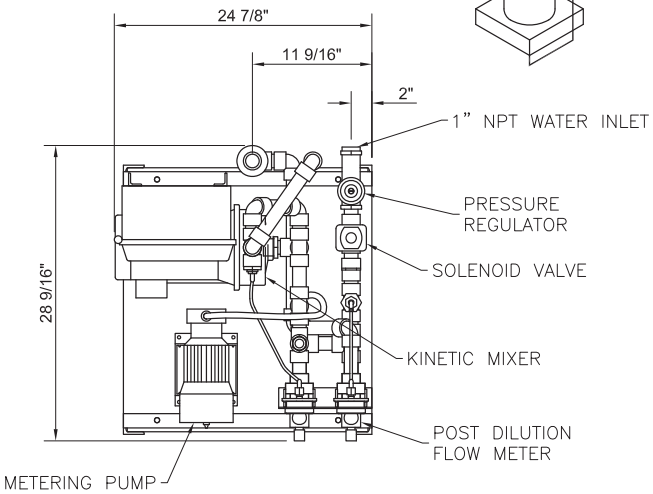

PLAN VIEW

DRAWN TMP	12/28/09	CHARTER MACHINE COMPANY 55 WESTER AVE METUCHEN N.J. 08840
APPROVED		
		TITLE ROEDOS L-2.10 MACHINE VIEWS W/ POST DILUTION AND POLYMER FLOW METER
G.E.C. TOLERANCES UNLESS OTHERWISE SPECIFIED FRACTIONAL DIM ±1/64 DECIMAL DIM ±.005 ANGLE ± 1/2 SURFACE FINISH 125		SIZE B · DWG NO. L2.10-02D · REV 0 SCALE 1" = 1'-0" · SHEET 1 OF 1

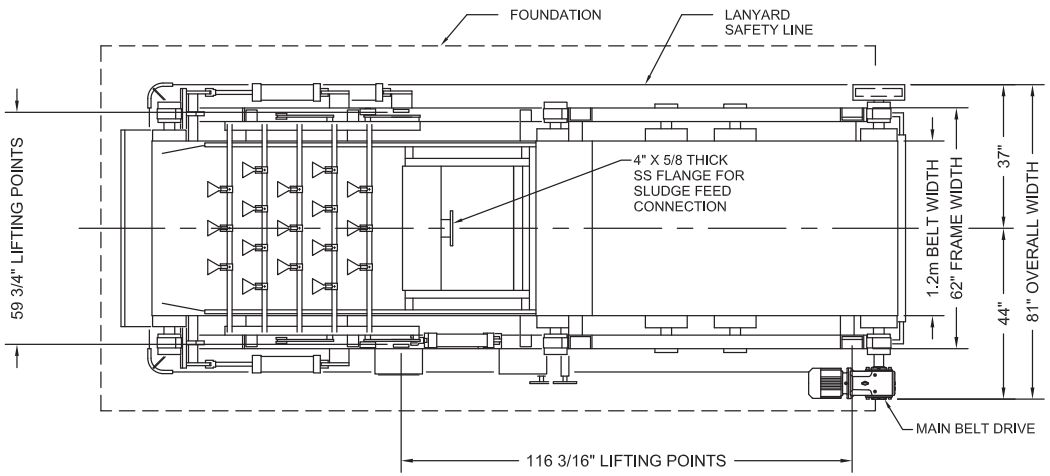

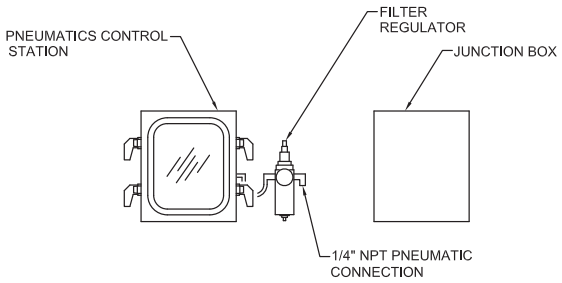

DETAIL "A"

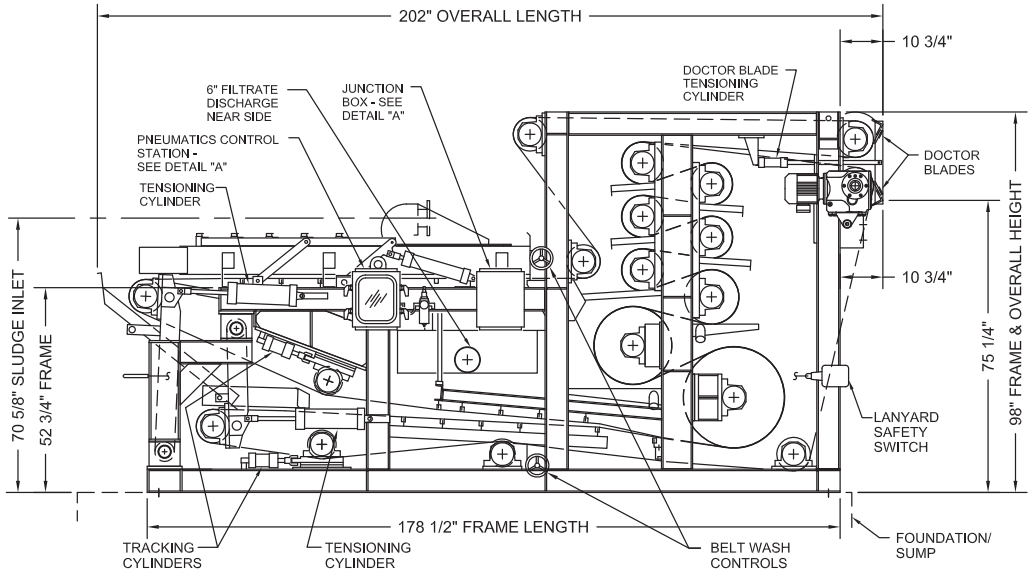

NOTES:

LOCATION OF 1 1/2" NPT PLANT WATER CONNECTION FOR BELT WASH SYSTEM VARIES ACCORDING TO LOCATION OF WASH WATER BOOSTER PUMP AND USE OF OPTIONAL WASH WATER RECYCLE.

CONTRACTOR TO PROVIDE 2 TO 3 ADDITIONAL POLYMER INJECTION PORTS. LOCATION OF ADDITIONAL INJECTION POINTS TO BE SPECIFIED BY ENGINEER.

DRY WEIGHT - 16,300 LBS

WET WEIGHT - 17,800 LBS

DRAWN TMP	12/21/06	CHARTER MACHINE COMPANY 55 WESTER AVE METUCHEN N.J. 08840
APPROVED		
G.E.C. TOLERANCES UNLESS OTHERWISE SPECIFIED FRACTIONAL DIM ±1/64 DECIMAL DIM ±.005 ANGLE ± 1/2 SURFACE FINISH 125		TITLE TOWER PRESS 12.41S MACHINE VIEWS
		SIZE B · DWG NO. TP12.41S-02 · REV 0
		SCALE 3/8" = 1'-0" · SHEET 1 OF 1

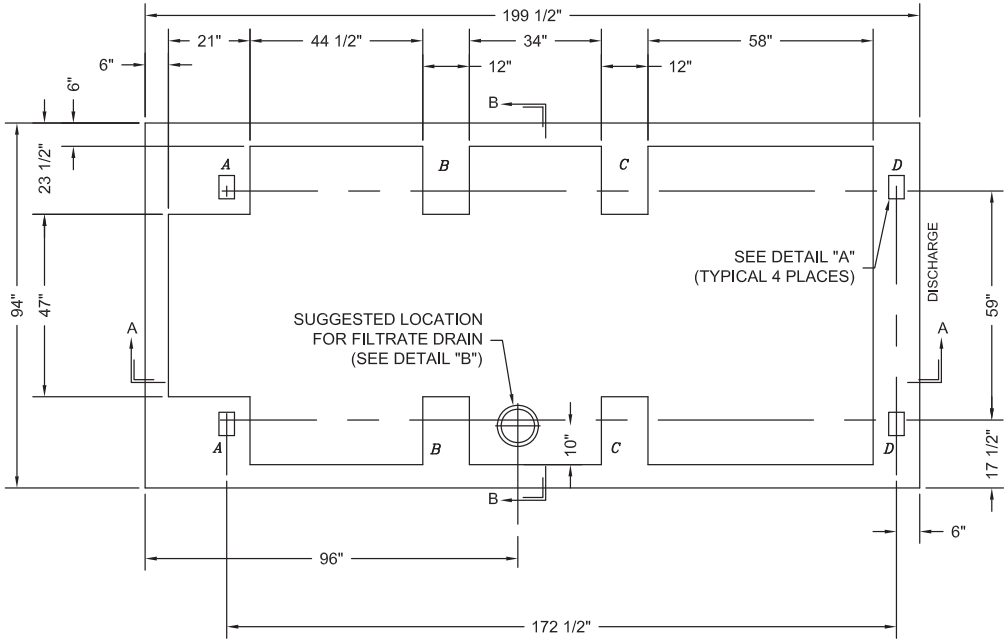

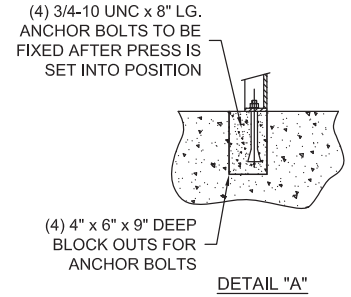

DETAIL "A"

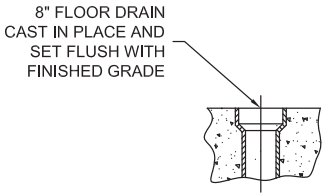

DETAIL "B"

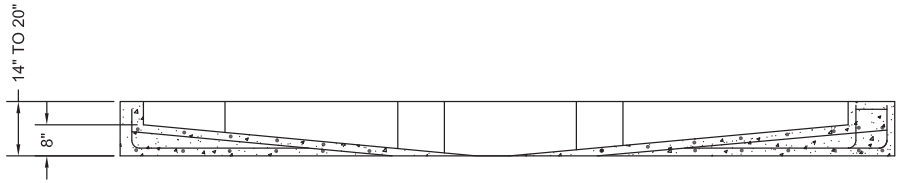

SECTION A-A

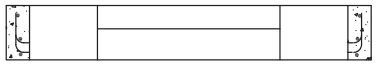

SECTION B-B

NOTES:

1) SUGGESTED 4000 PSI CONCRETE.
2) SUGGESTED REINFORCING - #4 REBARS AT 12" TOP AND BOTTOM BOTH DIRECTIONS.
3) SLOPE FLOOR TOWARDS DRAIN.

LOAD POINTS		
POINT	DRY WT.	WET WT.
A	1,400	1,515
B	1,405	1,630
C	2,605	2,830
D	2,740	2,925
TOTAL	16,300	17,800

DRAWN TMP	12/20/06	CHARTER MACHINE COMPANY 55 WESTER AVE METUCHEN N.J. 08840
APPROVED		
G.E.C. TOLERANCES UNLESS OTHERWISE SPECIFIED FRACTIONAL DIM ±1/64 DECIMAL DIM ±.005 ANGLE ± 1/2 SURFACE FINISH 125		TITLE TOWER PRESS 12.41S FOUNDATION
		SIZE B · DWG NO. TP12.41S-03 · REV 0
		SCALE 3/8" = 1'-0" · SHEET 1 OF 1

Attachment E: CUT Canada

Dear John

Following the piloting performed at our facility we are pleased to submit the following budgetary proposal. Testing was performed on sample water received in October 2013. A prototype module using the high efficiency PVDF membrane with an active area of 1.8 ft^2 was built for this test. A pilot unit was also designed and built.

The test was run in cross flow, continuous recirculation without concentrating. Nevertheless we have increased the concentration to 8000 mg/liter towards the end of the run. Test started at 5800 mg/liter.

The temperature was maintained constant using a cooling coil. For this reason the data in the graph is not temperature corrected.

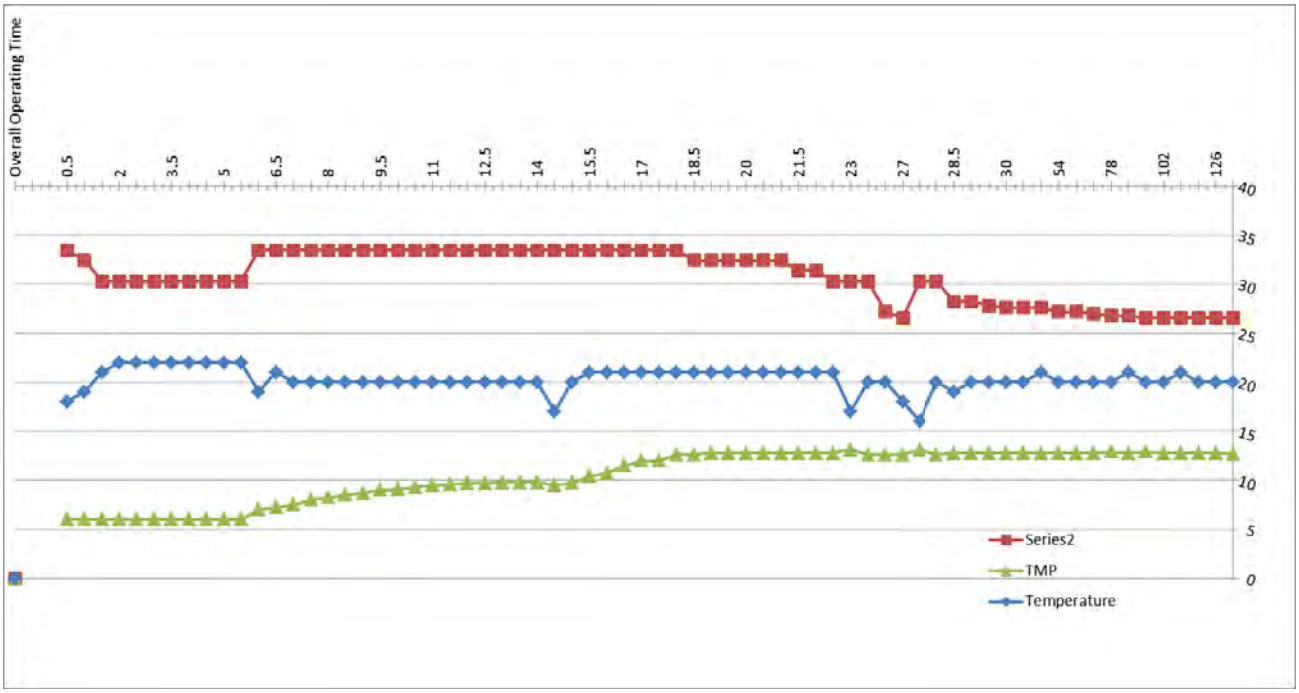

Important to notice is there is no fouling trend. There were no maintenance or recovery cleans performed during the test. There is an adjustment in flux when moved from shift operating to continuous. For sizing the application, a flux of 19 gfd was used as shown in the following table. We believe that this will be achieved or exceeded when operating over the entire range of 0.2% to 4-5%.

	Dry solids (lbs)	Dry solid(kg)	Sludge solids concentration (mg/L)	Total sludge discharge (liters)	Total sludge discharge (gallons)	Estimated sustainable flux (gfd)	Module active area (ft^2)	Estimated number of modules
ADF	830	377.2727	2000	188636.3636	49641.15	19	22	119
MaxDF	3400	1545.455	2000	772727.2727	203349.3	19	22	487
minDF	240	109.0909	2000	54545.45455	14354.07	19	22	35
	Inputs							

Please note the significant difference in number of modules required for ADF and MaxDF. This will translate in most of the modules either running idle or being shut down during the year.

Some of the advantages of our proposed solution are:

1. Excellent quality effluent. Modules are assembled with an UF membrane having a MWCO of 100 KDa. Effluent doesn't need to go back before the existing membrane step. Turbidity measured during the run was between 0.06 and 0.09 NTU.
2. No need for additional tanks. Modules come with strong PVC housing rated for pressure. One train can operate off a 5000 gallons PE tank.
3. No aeration requirement like other configuration membranes.
4. Flexibility. We are proposing 10 trains of 48 modules each. This will allow for alternating time of operation and/or conservation. Trains will run in batch mode using dedicated process tanks. They can run continuously without supervision, resulting in less manpower requirements. Trains will share 2 CIP systems.
5. Proven robustness and ease of operation with Permaflow tubular membranes (a Zenon developed and manufactured product that we own exclusive license), allowing for concentrating the sludge up to 40000 to 50000 mg/liter.
6. Reduced chemical requirements for CIP only. No other chemicals or polymer addition required.

The estimated cost for a system consisting of 10 trains of 48 modules each will be $ 1350000.00. Prices are ex-works Hamilton, Ontario, Canada and include the following:

Item	Qty	Description
1.0	10	Each **48-Z8 Tubular UF System, comes complete with**
1.1	1	304SS Custom SS Frame c/w legs and equipment and tank supports • Approx. overall size is 14 ft long x 6 ft wide x 8 ft tall
1.2	1	Process Recirculation Pump • (1) 75 HP Motor, ODP, 600VAC 3Ø 60Hz, close coupled to a • (1) Single Centrifugal Goulds Pump Model # GL10SHBF, 4x5 x8 • Impeller is a 7.875" Goulds, 1000 gpm at 100 psi

1.3	1	(1) Z-8 Tubular Membrane Permaflow – 8 XS • UF high permeability Tubular Membranes • System designed to hold total of (48) forty eight Z-8 modules. • Piping header and isolation valves only will be included for all (48) forty eight Z-8 modules • Hose and clamps installed Z-8 module included only.
1.4	0.2	Clean In Place Tank, ACO CBO-750 HDPE Open Top Conical Bottom Tank, overall 87" H x 70" diameter c/w Lid. **One CIP system per 5 UF trains**. Tank connections are: • 1x – 8" PVC Bulk Head Fitting o (Out to Process Pump) • 1x – 8" PVC Bulk Head Fittings • 1x – 2" PVC Bulk Head Fittings o (Inlet from Permeate) • 1x –2" PVC Bulkhead Head Fitting • 50 kW Incoloy heater c/w thermostat, high temperature override, fusing and contactor
1.5	1	UF Main Control Panel, complete with: • (1) 200 amp Disconnect switch with fuses • (1) Transformer 600/3/60 to 120/1/60 • (1) Power Supply, 120/1/60 to 24VDC • (1) Motor Starter w/ Overload • (1) Jazz PLC/HMI c/w. I/O and analog as required • (1) Power Light White • (1) Switch for Process ON/OFF • (1) Alarm Beacon RED • (1) Red Shutdown OFF Emergency Button • (1) Misc Relays, TB's, Panduit and Rail. Fuses etc
1.6	1 lot	Instrumentation, complete with: • 1) Temperature Switch, for High Temperature shutdown • (1) Pressure Switch set to 80 psi for membrane protection • (1) Temperature Indicator, 3" Dial, 0-250 deg C • (2) Pressure Indicators c/w Isolators, 0-160 psi, 2.5" Dial • (1) PVC Permeate rotameter rated for 10000 LPH • (1) PVC Retentate E&H magflometer rated for 4000 LPM
1.7	1 lot	PVC Piping, Valves and Fittings, low pressure feed and return, as per below: • (Lot) ½" to 8" Piping and fittings sch 80 PVC, S/W and Thrd. • (Lot) ½" to 2" Ball Valves for Isolation • (Lot) 3" to 8" Butterfly Valves for Isolation • (1) 8" Strainer for Feed Pump Protection

1.8	2	O & M Manual Loose c/w: • Component manufacturers information • Operation and troubleshooting write-up.

Installation Labour & Materials by Others
Includes 3rd Party Electrical Inspection
Membranes warranty -one year
Equipment warranty -two years.

Please don't hesitate to contact us if you have any questions.
I hope you will find this proposal satisfactory and looking forward to hear back from you.

Best Regards,

John Tomescu

Attachment F: Flottweg Separation

10700 Toebben Dr
Independence, KY 41051
859-448-2300

Boulder Betasso WTP Lab Test Report

Sample(s) Analyzed	Date Analyzed	Feasibility
Sample 1	10/25/2013	Yes

Summary:

This product's solids are soft and respond well to G force. The solids are sticky, but most likely scrollable. Judging by the clarity of the liquid. the possibility of a high recovery of suspended solids is there. I would suggest a pilot test of a two phase decanter.

10700 Toebben Dr
Independence, KY 41051
859-448-2300

1. General Data

Date of Test	: 25-Oct-13
Analysis Type	: Bottle Centrifuge
Name of Product/Process	: Watse Water
Customer Name	: Boulder Betasso WTP
Customer Address	: Boulder, CO 80301
Test Run By	: Eric Morgan
Report Written By	: Eric Morgan

2. Purpose of Application

The objective of this test was a feasibility study of Waste Water. The samples were received at Flottweg Separation Technology on 10/15/13. The samples were dried in an oven at 105°C overnight for weight percent, and a bottle centrifuge was used for the separation study, simulating the performance of the decanter centrifuge.

3. Test Run

Data Sheets included

4. Resulting Recommendations

The tested product is a viable candidate for seperation through accelerated gravitational force. It is recommended that a pilot trial be preformed, with a shallow cone Z23 test unit set up for two phase operation.

Spin Test Datasheet
1st

Customer Name: Boulder Betasso WTP
Sample Label: 1st
Date of Test: 10/25/2013
Test Completed by: Eric Morgan

Feed Information

pH	
Temperature	75
Total Solids (%)	0.64

Spin Results at 1,000 x g

Spin Time (min)	Solids (%v/v)	Heavy Liquid (%v/v)
1 min	40	60
2 min	32	68
3 min	28	72
4 min	26	74
5 min	25	75

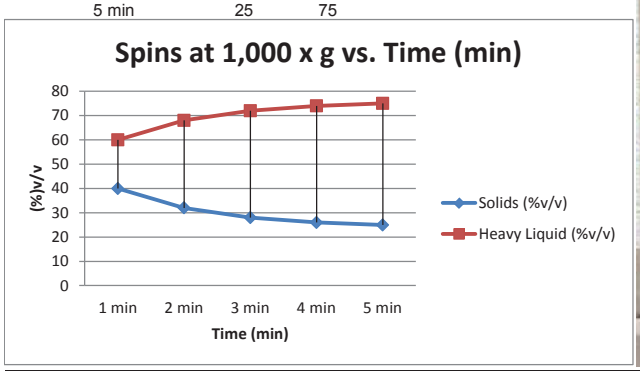

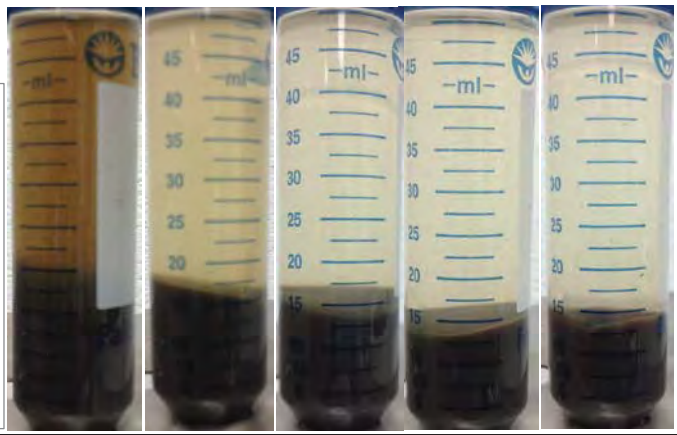

Spin Results at 3,000 x g

Spin Time (min)	Solids (%v/v)	Heavy Liquid (%v/v)
1 min	28	72
2 min	27	73
3 min	24	76
4 min	22	78
5 min	21	79

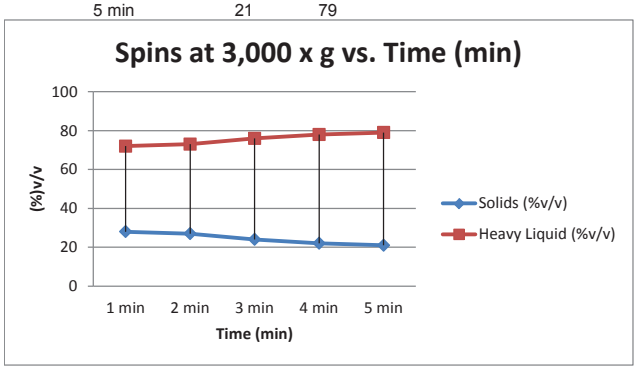

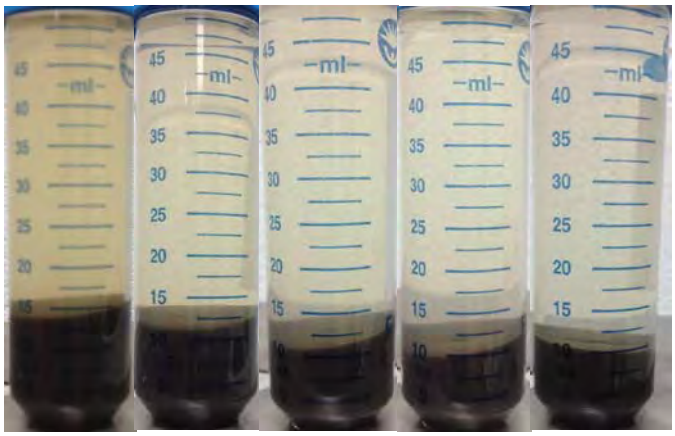

Flottweg
Separation Technology

FLOTTWEG RECUVANE

Reduce your energy costs!

THE FLOTTWEG RECUVANE SYSTEM

The easy way to reduce the power consumption of your decanter centrifuge

Increasing energy costs will result in higher operating costs of your decanter centrifuge. The FLOTTWEG RECUVANE system helps to reduce power consumption and therefore save money. It does not impact on the capacity of the decanter.

HOW IT WORKS

The decanter needs energy to accelerate the sludge to the rotational speed. Typically, the centrate water separated from the solids is discharged by gravity with the help of the impeller disc. However, the energy included in the water is lost.

Thanks to the special construction of the RECUVANE system the centrate water can be discharged in a specific way and the energy recovered during discharge utilized by supporting the main drive, thus saving 10 to 20% of the operating power depending on the pond depth and the sludge.

Benefits of the FLOTTWEG RECUVANE system

- Reduced power consumption of your decanter centrifuge (10 - 20 %)*
- Quick pay back
- Easy retrofitting
- Existing separation processes do not need to be modified
- For optimum operation, it is possible to adjust different pond depths

** depending on pond depth and sludge characteristics*

TECHNICAL-INFO

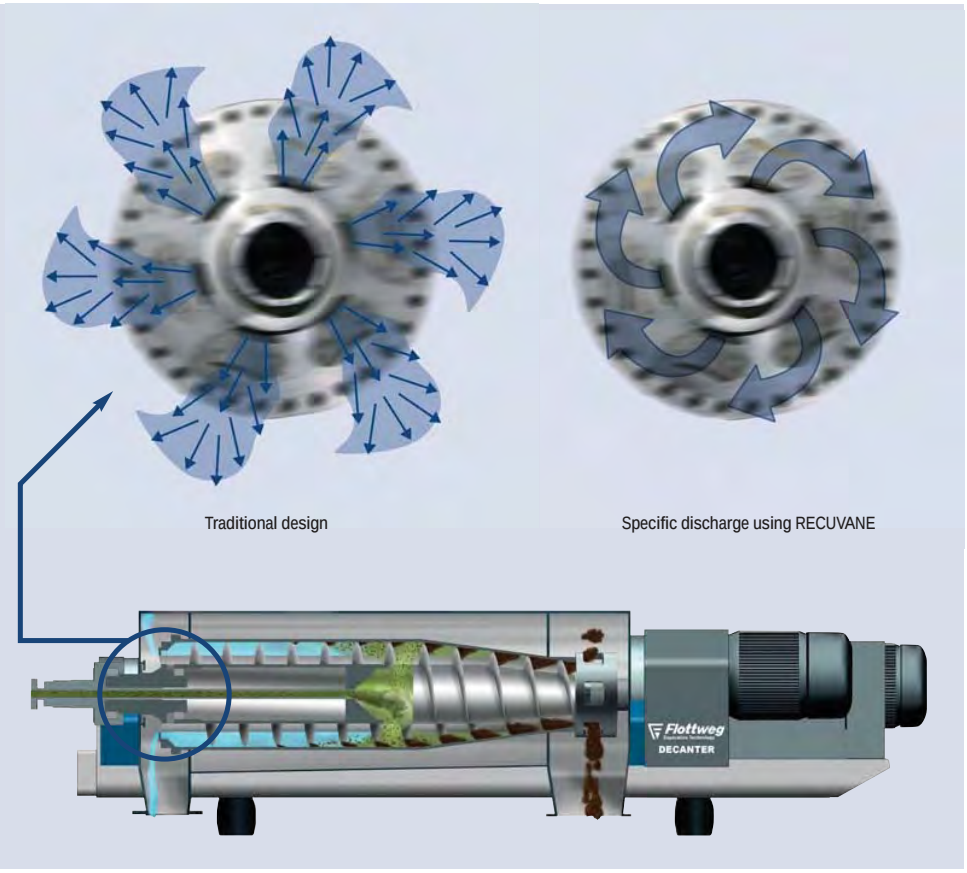

Discharge of the centrate water

BENCH MARK TEST WITH A FLOTTWEG DECANTER C7E*

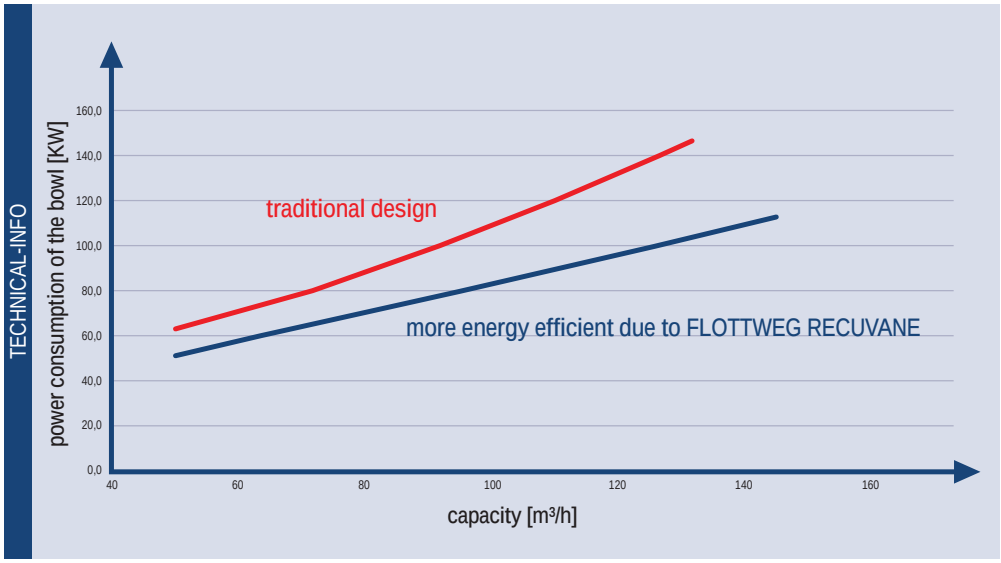

* The diagram shows a bench mark test using the example of a FLOTTWEG DECANTER in a German sewage treatment plant. The figures were determined for a DECANTER C7E.

THE RECUVANE SYSTEM IS AVAILABLE FOR THE FOLLOWING DECANTER CENTRIFUGES

SERIES WHICH ARE COMPATIBLE WITH RECUVANE	
FLOTTWEG C-series	C3E, C4E, C5E, C7E
FLOTTWEG Z-series	Z5E, Z6E, Z8E, Z73, Z92

Flottweg SE
Industriestraße 6-8
84137 Vilsbiburg
Deutschland (Germany)

Tel.: +49 8741 301-0
Fax: +49 8741 301-300

mail@flottweg.com
www.flottweg.com

REPRESENTATIVE

PR-0004 ZL-10 05/2012

Flottweg
Separation Technology

FLOTTWEG DECANTERS
for water and wastewater facilities

CLEAN WATER IS AN INDISPENSABLE RESOURCE

efficient wastewater treatment is a basic requirement

All water on earth circulates in a closed loop. It moves from land to sea to atmosphere changing from ice to water to vapor several times. The total quantity of water on earth amounts to 1.4 billion cubic-kilometers of which 96.5 % is sea water in the oceans. Only 3.5 %, i.e. 49 million cubic-kilometers, are fresh water. However, more than half of this fresh water is ice on the poles, glaciers and permafrost soil.

FLOTTWEG is ISO 9001 certified and manufactures its products in compliance with all current technical standards.

In modern water management there is a closed loop as well. This loop comprises the way the water flows from drinking water to wastewater. Germany – FLOTTWEG's home market – holds a leading position in water management. According to the figures of the German Association for Water, Wastewater and Waste, 95 % of the wastewater is treated in wastewater facilities, where 90 % of the chemical and biological oxygen demand, 77 % of the total nitrogen and 90 % of the total phosphorous are eliminated.

Since the 1950s, when FLOTTWEG started to build decanter centrifuges and especially after the 1970s when Germany's wastewater business started to flourish, providing decanters for sludge dewatering and thickening has been one of FLOTTWEG's core strengths. Today FLOTTWEG DECANTERS efficiently operate in treatment facilities from 5,000 to 10,000,000 population equivalents all over the world.

Berliner Wasserbetriebe

THE WASTEWATER BUSINESS DESERVES ITS OWN PRODUCT LINE
the FLOTTWEG C-Series

Over the last five decades FLOTTWEG has acquired a great deal of expertise in sludge thickening and dewatering. Thus FLOTTWEG decided to create a new decanter series solely manufactured for sludge separation, called the FLOTTWEG C-Series. This new decanter series incorporates the latest know-how in mechanical engineering, manufacturing, and control system fabrication. The result is a new series of environmental centrifuges highlighted by FLOTTWEG quality, reliability and optimal price/performance ratio. Special features in bowl design, drive systems, and control systems assure optimal performance in terms of recovery, cake dryness, and capacity.

Special emphasis was put on life cycle costs. The new FLOTTWEG C-Series excels with up to 30 % less power consumption compared to standard decanters. Fresh water is only required to prepare the polymer solution. The standard double-walled sound insulated housing eliminates the need for additional noise protection measures. Easy accessibility to service points as well as on-site replaceable wear parts, dramatically reduces downtime for maintenance.

FLOTTWEG C-Series – the latest FLOTTWEG DECANTER with renowned FLOTTWEG quality.

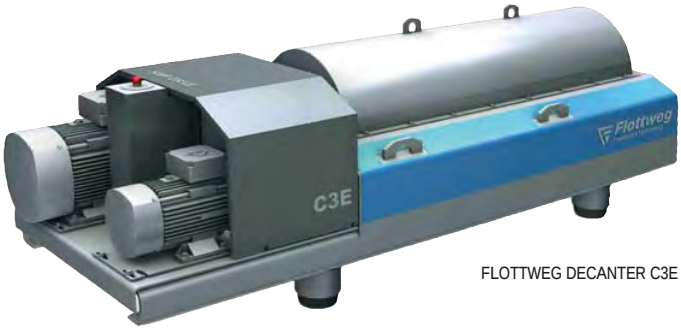

FLOTTWEG DECANTER C3E

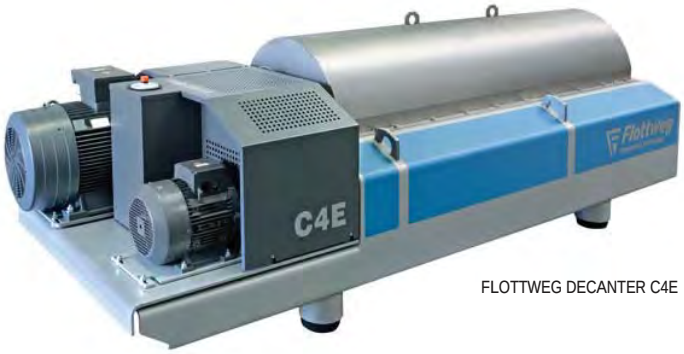

FLOTTWEG DECANTER C4E

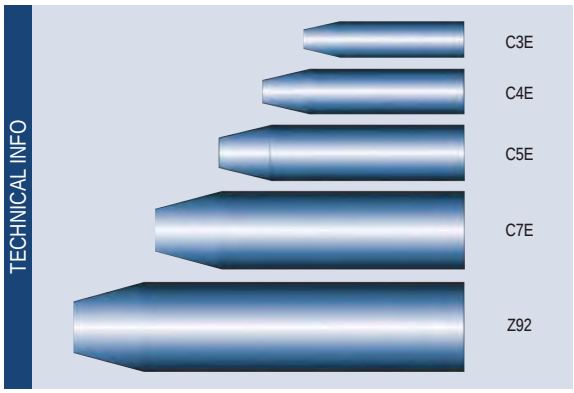

FLOTTWEG product line for a clean environment

FLOTTWEG DECANTER C5E

® = registered trademark for various countries

FLOTTWEG OSE DECANTERS
for sludge thickening

In sludge thickening, surplus sludge generated in the biological stages is concentrated from 1 % or less total solids content to 5 – 8 % before it is pumped into the digester. As a result, the amount of sludge is reduced by 90 to 95 % in volume.

Specifically, for this purpose the FLOTTWEG OSE DECANTER was created (OSE = optimal sludge thickening). Today the FLOTTWEG OSE DECANTERS stand out from the competition with reliability and cost efficiency.

Recent studies taking into account all relevant fixed costs (capital and labor) as well as variable costs (consumption of power, water, and polymer as well as spare parts) show that there are advantages for a thickening decanter versus other thickening equipment. These advantages become increasingly significant in the case of large capacities and long operation time.

FLOTTWEG OSE DECANTERS are available for flow rates ranging from 20 to 250 m^3/h (90 to 1100 gpm) per unit.

Customer's benefits versus other thickening techniques

Optimized operational/labor costs by
- continuous and automatic operation
- low specific energy demand
- low or no polymer demand
- easy cleaning by flushing without dismantling
- durable wear protection
- field-replaceable spare parts

Saving construction costs by
- compact design, small footprint, and high specific capacity
- closed design that minimizes odor emissions, no special vent line necessary

Versatility
- FLOTTWEG OSE DECANTERS are also suitable for processing blended and primary sludges

TECHNICAL INFO

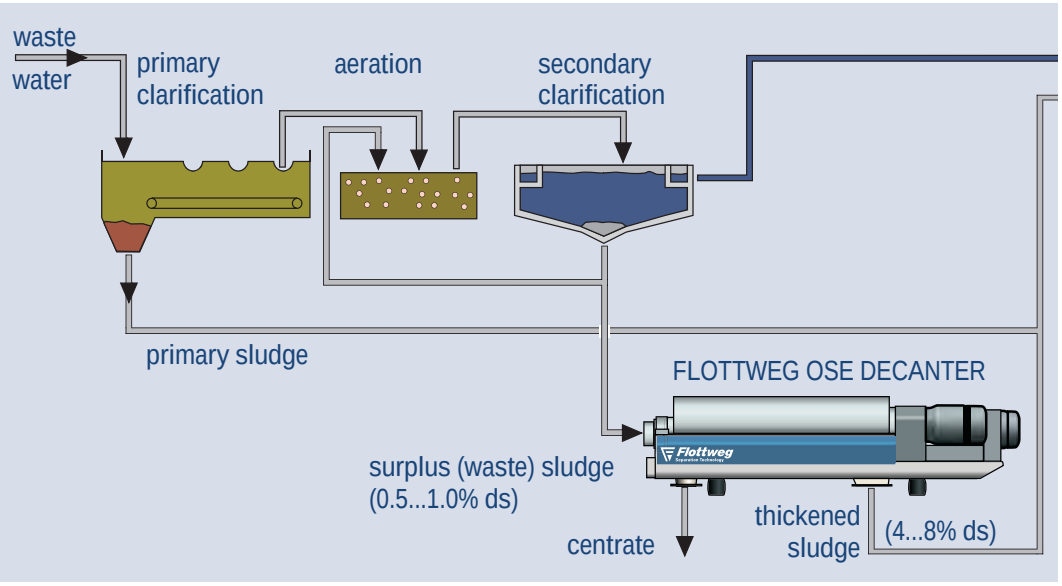

Customer's benefits versus other dewatering techniques

Optimally balanced performance:
- maximum cake dryness
- minimum specific power consumption
- minimum polymer demand

Optimized operational labor costs by
- continuous and automatic operation
- easy cleaning by flushing without dismantling
- durable wear protection
- field-replaceable spare parts
- no consumables such as filter aids, filter cloth, etc.

Flexibility
- FLOTTWEG HTS DECANTERS® can be adjusted to varying feed and operation conditions during operation automatically via PLC or remote control

Regardless of whether the sludge after dewatering is transported, reused as fertilizer, disposed of in landfills, or incinerated; maximum dryness is the most critical factor. The other key factors are cost efficiency in terms of consumption of polymer, energy, water and spare parts, as well as continuous, automatic operation at minimal cost. Already since the beginning of the 1970s all these critical design features have been taken into account.

Today the result of this continuous development is the complete FLOTTWEG HTS DECANTER® portfolio for sludge dewatering which can handle capacities of 10 to 180 m³/h (40 to 800 gpm).

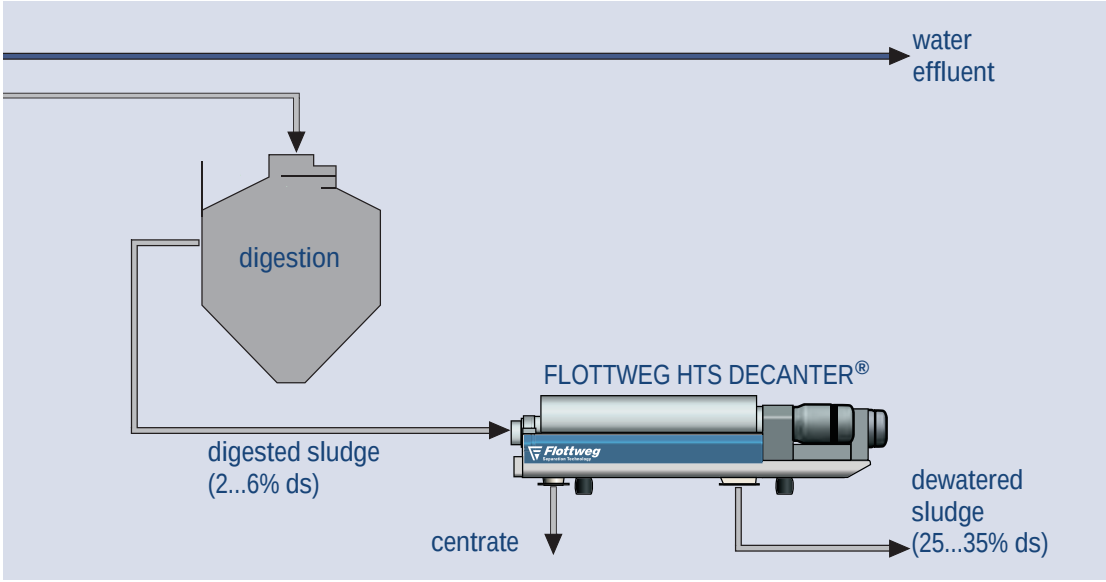

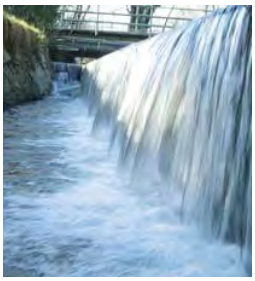

HOW THE FLOTTWEG DECANTER WORKS

A decanter centrifuge can be viewed as a settling pond wrapped around an axis. In the settling pond, solid particles, which are heavier than the liquid, settle to the bottom driven by gravity and build up a sediment layer on the bottom of the pond. In the rotating bowl of the centrifuge, solid particles, which are heavier than the liquid, move to the inner diameter of the bowl driven by centrifugal force and build up an annular sediment layer on the inner surface of the centrifuge bowl. Since the centrifugal force in the decanter centrifuge is approximately 3000 x g instead of 1 x g in the settling pond, separating solid particles from a liquid in a centrifuge becomes much faster and more efficient.

The bowl shell of a decanter centrifuge has a cylindrical – conical shape. It rotates at a high speed creating the centrifugal force needed for the separation. Inside the bowl, there is a scroll conveyor for the continuous discharge of the sediment which is packed on the inner surface of the bowl wall. The scroll conveyor rotates at a speed relative to the bowl speed. This differential speed is created by a rotating gear box at the drive end of the bowl.

The sludge to be separated enters the bowl via a stationary feed pipe. From the feed pipe it enters the separation zone via feed ports in the scroll body.

In the separation zone, it separates into a sediment layer and liquid layer. The sediment is scraped off the bowl wall via the scroll conveyor and delivered out of the pond on the conical end of the machine, also called the dry zone, before it leaves via discharge ports on the conical end of the bowl.

The separated liquid flows to the cylindrical end of the bowl where it is discharged by gravity via an overflow weir.

TECHNICAL INFO

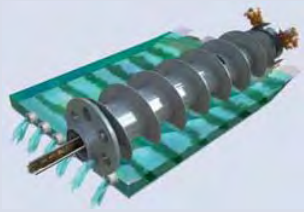

The picture shows a decanter scroll

SPECIAL DESIGN FEATURES
of the FLOTTWEG OSE and HTS DECANTERS®

BOWL AND SCROLL DESIGN

The high cake dryness obtained using the FLOTTWEG HTS DECANTER® is the result of the machine characteristics: centrifugal dewatering under high g-force and mechanical pressing. The bowl is shaped in a "deep pond design" to provide a large bowl volume and a narrow discharge diameter for low energy demand. The layout of bowl and scroll in combination with a high-torque scroll drive results in a high pressure in the pressing zone located in the conical end of the bowl.

DRIVE SYSTEM

The bowl is driven via a motor controlled by a frequency inverter (VFD). For the scroll drive there is the FLOTTWEG SIMP-DRIVE® – a self regulating system consisting of a multi-stage planetary gear and control system including a frequency inverter.

The FLOTTWEG SIMP-DRIVE® controls the differential speed by monitoring and controlling on torque that is generated when transporting the solids cake through the centrifuge bowl. Therefore, the differential speed can be extremely low to create the maximum pressure in the pressing zone of the bowl in order to achieve the maximum cake dryness, even under varying load conditions.

DOSAGE OF POLYMER FLOCCULANT AIDS

To some extent, the polymer demand in sludge dewatering and thickening depends on the machine design. For maximum efficiency, the flocculated sludge must be created at the right spot and at the right time. Therefore, the FLOTTWEG OSE and HTS DECANTERS® are provided with a special mixing pipe to create the flocculated sludge directly before entering the separation zone.

WEAR PROTECTION

All parts of the FLOTTWEG OSE and HTS DECANTERS® exposed to wear are protected depending on the amount of abrasives located in the feed stream. The scroll flights are hard faced with tungsten carbide. All ports for feed and cake discharge are protected by bushings made of hard metal, or silicon carbide. The bushings are field replaceable.

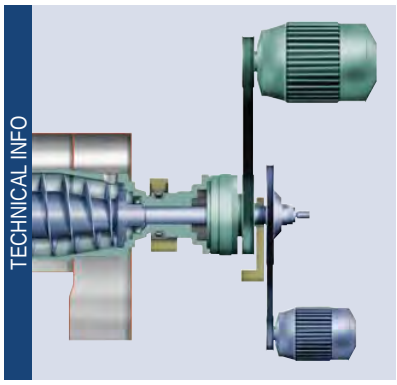

FLOTTWEG SIMP-DRIVE®

MATERIALS OF CONSTRUCTION

For all wetted parts FLOTTWEG exclusively uses high-quality stainless steel. All models are equipped with bowls made of centrifugally casted duplex stainless steel to ensure optimal strength and corrosion resistance.

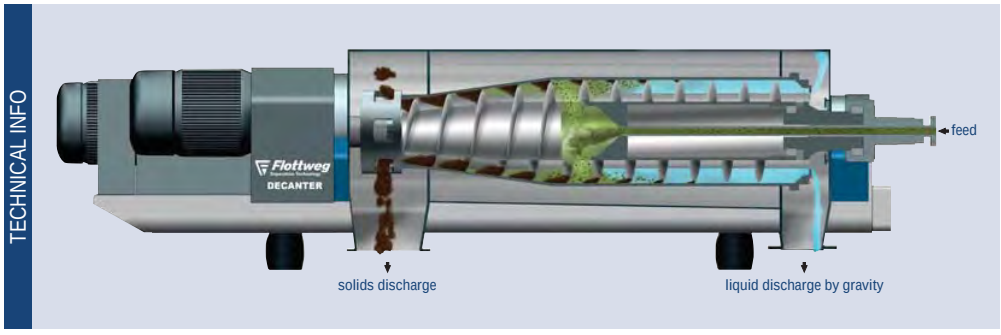

Liquid-solid separation – FLOTTWEG DECANTER with gravity overflow

® = registered trademark for various countries

FLOTTWEG SYSTEMS ENGINEERING

In order to optimize the separation results, maximize machine reliability, and minimize operating costs, the centrifuge should be properly matched with all surrounding plant components.

A FLOTTWEG SYSTEM can be stationary, mobile or semi-mobile. It can be skid mounted on a platform or installed in a closed container.

Our engineering team has many years of experience in the layout of plant components such as control cabinets, pumps, flocculation units, piping etc. We know that customer requirements vary and depend on process, location and other circumstances.

Customer benefits

- High separation efficiency due to comprehensively tested components
- Quick and safe commissioning due to reduced control points
- High reliability and safety since FLOTTWEG assumes the responsibility for the whole system
- Maximum comfort for our customers since there is only one contact person for the complete system
- Long life time and high availability due to our full support for the whole operating system

TECHNICAL INFO

FLOTTWEG Touch Control

FLOTTWEG DECANTER Z6E in a German waste water facility

FLOTTWEG – YOUR RELIABLE PARTNER

PRE-SALES CUSTOMER SERVICE

Being experts in centrifugal separation and sludge treatment, we can give competent advice to our customers. Based on the standard sludge data including total suspended solids (TSS), volatile suspended solids (VSS), sludge volume index (SVI) and other parameters, we can estimate the sludge cake dryness and polymer consumption. We acquire these preliminary estimates via a laboratory test or via our comprehensive data base. There are also field test units to prove the capability of the FLOTTWEG SEPARATION TECHNOLOGY on site.

FLOTTWEG SYSTEM C3E-4

AFTER-SALES CUSTOMER SERVICE

Even the best machinery needs to be maintained and serviced. Over many decades, FLOTTWEG has established a worldwide service network consisting of its own subsidiaries, branch offices, and representatives to provide our customers with localized service and spare parts. Our service engineers and technicians are qualified for any kind of installation, commissioning, repair and maintenance.

FLOTTWEG OSE DECANTERS
for sludge thickening

FLOTTWEG DECANTER C7E-4

TECHNICAL DATA OF FLOTTWEG OSE DECANTERS					
Type	C3E-4	C4E-4	C5E-4	C7E-4	Z92-4
Materials of construction	All product wetted parts are made of high grade stainless steel such as Duplex stainless steel, 1.4571 (AISI 316 Ti), etc.				
Dimensions* (L x W x H)	2980 x 940 x 900 mm 118" x 37" x 36"	3520 x 1140 x 1030 mm 139" x 45" x 41"	4100 x 1520 x 1210 mm 162" x 60" x 48"	4800 x 1720 x 1400 189" x 68" x 56"	5880 x 2780 x 1730 mm 232" x 110" x 69"
Gross weight*	1735 kg 3825 lb	2760 kg 6100 lb	5060 kg 11 250 lb	7940 kg 17 500 lb	18000 kg 40 000 lb
Motor for bowl drive	18,5 kW 25 hp	22 – 37 kW 30 – 50 hp	37 – 55 kW 50 – 75 hp	75 – 110 kW 100 – 150 hp	110 – 200 kW 150 – 300 hp
Motor for scroll drive FLOTTWEG SIMP-DRIVE®	4 kW 5 hp	4 kW 5 hp	5,5 kW 7.5 hp	5,5 kW 7.5 hp	7,5 kW 10 hp
Feed capacity*	15 – 30 m³/h 60 – 120 gpm	30 – 60 m³/h 125 – 250 gpm	45 – 90 m³/h 200 – 400 gpm	70 – 140 m³/h 300 – 600 gpm	120 – 250 m³/h 500 – 1 100 gpm

** The listed figures are guidelines for information only. Actual capacity depends on the characteristics of the feed.*

FLOTTWEG HTS DECANTERS®
for sludge dewatering

FLOTTWEG DECANTER C3E-4

TECHNICAL DATA OF FLOTTWEG HTS DECANTERS®					
Type	C3E-4	C4E-4	C5E-4	C7E-4	Z92-4
Materials of construction	All product wetted parts are made of high grade stainless steel such as Duplex stainless steel, 1.4571 (AISI 316 Ti), etc.				
Dimensions* (L x W x H)	2980 x 940 x 900 mm 118" x 37" x 36"	3520 x 1140 x 1030 mm 139" x 45" x 41"	4100 x 1520 x 1210 mm 162" x 60" x 48"	4800 x 1720 x 1400 189" x 68" x 56"	5880 x 2780 x 1730 mm 232" x 110" x 69"
Gross weight*	1735 kg 3825 lb	2760 kg 6100 lb	5060 kg 11 250 lb	7940 kg 17 500 lb	18000 kg 40 000 lb
Motor for bowl drive	18,5 kW 25 hp	22 – 37 kW 30 – 50 hp	45 – 75 kW 60 – 100 hp	90 – 132 kW 125 – 200 hp	110 – 200 kW 150 – 300 hp
Motor for scroll drive FLOTTWEG SIMP-DRIVE®	4 kW 5 hp	7.5 kW 10 hp	15 kW 20 hp	30 kW 40 hp	30 – 45 kW 40 – 60 hp
Feed capacity*	10 – 20 m³/h 45 – 90 gpm	20 – 40 m³/h 90 – 180 gpm	30 – 60 m³/h 125 – 250 gpm	70 – 140 m³/h 300 – 600 gpm	90 – 180 m³/h 400 – 800 gpm

** The listed figures are guidelines for information only. Actual capacity depends on the characteristics of the feed.*

® = registered trademark for various countries

Flottweg SE
Industriestraße 6-8
84137 Vilsbiburg
Deutschland (Germany)

Tel.: +49 8741 301-0
Fax: +49 8741 301-300

mail@flottweg.com
www.flottweg.com

REPRESENTATIVE

PR-0004 L - 10 03/2012

Attachment G: FKC Co., Ltd.

FKC CO., LTD.

2708 West 18th Street
Port Angeles, WA 98363

(360) 452-9472
FAX (360) 452-6880

By e-Mail

John Bratby Ph.D.
Brown and Caldwell

Re: FKC Laboratory Test Results – Boulder, CO

Dear John:

Following are the results of the testing of the sludge sample which you recently sent to us for analysis.

I. Inlet conditions	
Inlet consistency (TS):	0.58 %
Color:	Lt. Brown
Fiber content (150 mesh):	None
Ash content:	43.2 %
II. Conditioning requirements	
Polymer required:	Yes
Polymer used:	EM 533
Polymer dosage (active):	29 lb./T
III. Dewatering tests	
Gravity drainage:	2.5 %
Hand dewatering:	8.1 %
Screw press simulation:	17.2 %

The sludge flocculated easily, however the floc strength was very week. We have found this similar to other WTP when inlet consistencies are less then 1%. We performed additional testing with the WTP residuals after decanting and the polymer dose was reduced to 17 Lb. / DT. Dewatering results were the same at the lower polymer dose.

Based on the sample and FKC's experience, FKC expects to consistently dewater the sludge generated at the Boulder WTP to 16 – 18% solids.

We hope this information is helpful. Please contact this office with any questions about the lab testing, or if we may be of further assistance to you.

Sincerely,
FKC Co., Ltd.

Wesley Bond

FKC CO., LTD.

2708 West 18th Street
Port Angeles, WA 98363

(360) 452-9472
FAX (360) 452-6880

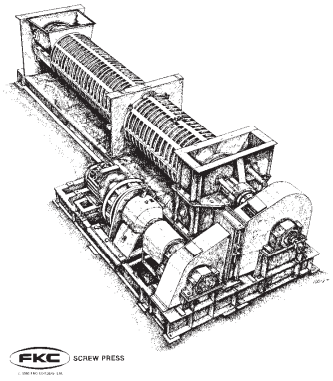

October 25, 2013

John Bratby Ph.D., P.E.*
Vice President - Senior Process Engineer
Brown and Caldwell

RE: QT102513WB - Proposal for FKC Dewatering Equipment

John,

Thank you for considering FKC as your dewatering equipment supplier.

Attached to this letter is the proposal for FKC dewatering equipment as you requested. The equipment is sized to dewater 150 Dry Lbs. / Hr. of Boulder WTP residuals as previously tested.

The pricing summary is as follows:

SHX-700x4000L Screw Press	US $ 265,000
Ancillary Equipment Skid	Included
Total , FOB Boulder, CO	**US $ 265,000**

Along with this pricing you will find information on other miscellaneous information such as delivery, payment terms, warranty and performance guarantees. We have also attached some reference drawings of the equipment.

Please note the skid mounted equipment quoted includes a sludge feed pump, polymer system, PLC-based control panel, flocculation tank, and 20’ long conveyor. All equipment found on the ancillary skid are integrally piped and wired to each other. Power and control wiring to the conveyor is to be installed in the field and supplied by purchaser.

We hope this information is helpful. Please contact this office if you have questions or require any further information.

Sincerely,
FKC Co., Ltd

Wesley Bond

Table of Contents

A. Equipment

1.	Screw Press	1
2.	Ancillary Equipment Skid	2-3

B. Miscellaneous

1.	Delivery	4
2.	Shipping Arrangements	4
3.	Price Summary	4
4.	Effective Period	4
5.	Payment Terms	4
6.	Installation	5
7.	Operator Training and Start up	5
8.	Warranty	5
9.	Performance Guarantee	5
10.	Documentation Schedule	6
11.	Spare Parts List	6
12.	Service Rates	6
13.	Reference Drawings	

A. Proposed Equipment

1. Screw Press –

Qty.	Description	Unit Price, FOB Boulder, CO
1	**FKC Screw Press** **Model BHX- 700x4000L**	**US$ 265,000 each**
	Material:	WTP Residuals at Boulder, CO WTP
	Inlet Capacity:	150 dry pounds per hour 1.8 dry tons per 24 hour day 40 GPM at 0.75% Inlet TS
	Inlet consistency:	0.75% or higher Total Solids
	Outlet consistency:	16 % or higher Total Solids with Polymer Use
	Nonvolatile solids content: (Ash Content)	40% or higher
	Fiber content:	5% or higher
	Materials of construction:	304 Stainless Steel wetted parts, Base coated CS Non-wetted parts coated CS
	Screw design:	304 Stainless Steel wetted parts
	Screens:	Perforated 304 Stainless Steel
	Speed reducer:	Sumitomo Cyclo reducer
	Motor:	3.0 HP, 1800 rpm, NEMA B, 480 VAC, 3 Ph, 60 Hz **motor included** Suitable for variable speed operation w/ PWM constant torque inverter (See Ancillary Skid Info for VFD supply)
	Other:	1 set standard tools 1 set drum covers 1 motor coupling 4 spare screens

A. Proposed Equipment (con't)

A. Proposed Skid Equipment –

Skid Equipment

Flocculation Tank

FKC Co., Ltd.
175 Gallon Mixing tank
304 SS construction
SEW Eurodrive 1 HP, 480 V AC

Single Sludge Pumps

NETZSCH Inc.
NEMO Pump
10 – 60 GPM
5 HP, 480 VAC 3P
Pump Temperature Sensor

Polymer Make Down System

Fluid Dynamics
dynaBLEND polymer blending system
Peristaltic Polymer Pump
304 SS Construction
NEMA 4X Enclosure

Conveyor

FKC Co., Ltd..
9" Diameter x 20' Long
Shaftless MS Screw
304 SS Trough
SEW Eurodrive
3 HP, 480 VAC, 3P

A. Proposed Skid Equipment (continued) –

Control Panel

FKC Designed Panel

- Enclosure – NEMA 4X SS
- Power Supply 480 VAC, 3 P
- Step Down Transformer
- Screw Press VFD
- Sludge Pump VFD
- Flocculation Tank Motor Starter
- Conveyor Motor Starter
- Polymer System Remote Start / Stop
- Screw Press Level Transmitter
- Screw Press High Level Alarm
- Automated Screw Press Shower System
- All Required DO / DI / AO / AI
- 200 BTU Air Conditioner
- Emergency Stop
- UL Listed

Skid

FKC Co., Ltd.

- Skid 20’ long by 8’ wide
- Constructed of Marine Grade Aluminum 6061-T6
- All Ancillary Equipment Integrated onto Skid
- All Piping, electrical, and testing completed prior to shipment

B. Miscellaneous

1. Delivery

The screw press and ancillary skid will be ready to ship within **five (5)** months after receipt of written purchase order. Delivery will be within **six (6)** months after receipt of purchase order to your facility.

2. Shipping Arrangements

The FKC screw press will be shipped via 40' and/or 20' open top container from Fukoku Kogyo's (FKC Japan) Ishinomaki, Japan factory to the **nearest port** then best way overland to Port Angeles, WA.

The Ancillary Equipment Skid and Screw Press will be shipped best way from our facility in Port Angeles, WA. Purchaser to providing unloading and installation services.

3. Price Summary

BHX-700x4000L Screw Press	US $ 265,000
Ancillary Equipment Skid	Included
Total , FOB CO	**US $ 265,000**

These prices do not include taxes or bonding.

The skid quoted includes a sludge feed pump, polymer system, PLC-based control panel, flocculation tank, and conveyor. All equipment found on the ancillary skid are integrally piped and wired to each other. Power and control wiring to the Conveyor is to be installed in the field and supplied by purchaser.

4. Effective Period

This proposal shall remain valid 60 days from the date of the proposal.

5. Payment Terms

30% with certified drawings
30% with shipment
30% with delivery
10% with performance or within 6 months, whichever occurs first.

Net 30 days

6. Installation

The screw press skid is shipped ready for installation. The flocculation tank and agitator will require some assembly for installation. Installation drawings are provided.

Each other piece of equipment not integral to the skid is shipped loose and separate which will require field installation, wiring and utility connections.

Installation and erection assistance are not included in the price of the equipment and generally are not required. However, the service is available for our standard service rates (see the enclosed rate sheet).

7. Operator Training and Start Up

Operator and maintenance training and start up services are included in the price of the equipment. Operator and maintenance training can be accomplished in approximately two hours per group. Ideal training sessions include both classroom and on-site (at the screw press) sessions. Generally speaking training and start up can be accomplished in one trip within a three day period.

A separate performance trip is included in the price of the equipment. The performance trip can be accomplished in a two day period.

Erection assistance and a separate trip for training are not included in the price of the equipment. Additional engineering service days are billed at the rates on the enclosed rate sheet.

8. Warranty

FKC's mechanical warranty covers material and workmanship for a period of twelve (12) months from start-up or eighteen (18) months from delivery whichever occurs first.

9. Performance Guarantee

The performance figures and conditions denoted in section A of this proposal constitute FKC Co., Ltd.'s performance guarantee and the conditions required to meet the guarantee. All of the consistency figures are based on total solids (TS) not total suspended solids (TSS).

In the event that performance is not met, FKC will provide all parts, engineering, and labor associated with the work necessary to bring the equipment into conformance with the performance guarantee.

10. Documentation Schedule

A. Approval Drawings - within 3 weeks after receipt of purchase order
   To meet delivery schedule, Buyer must return Approval Drawings in 14 days.
B. Certified Drawings - within 2 weeks after return of approval drawings
C. Operation and Maintenance Manuals - 14-16 weeks after receipt of order

11. Spare Parts List

No spare parts are required for the first 1-2 year period of operation.
A list of long term spare parts is available upon request.

12. Service Rates

The following are rates and terms for erection supervision, start-up supervision and in-site training furnished by FKC:

If required, round-trip airfare (coach class) from Port Angeles, WA to airport nearest work site.

Weekdays

$1000.00 - Per eight (8) hour day on weekdays plus, lodging, and rental car expenses.
$187.50 - Per hour for all hours exceeding eight (8) hour workday on weekdays.
$108.00 - Per hour for office engineering services and telephone consultations.

Saturdays, Sundays and Holidays

$1,440.00 - Per eight (8) hour day plus lodging and rental car expenses.
$270.00 - Per hour for all hours exceeding eight (8) hour workday.

Travel Time - Weekdays

$80.00 - Per hour travel time. (Not to exceed $990/day)

Travel Time – Weekends and US Holidays

$120.00 - Per hour travel time (Not to exceed $1,440/day)
$120.00 - Per hour travel time (Not to exceed $900.00/day)

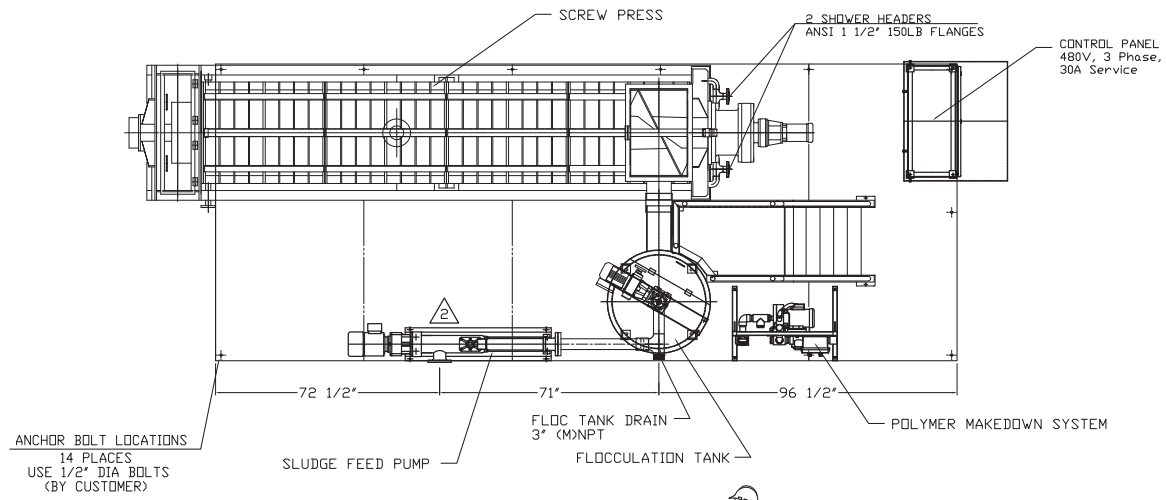

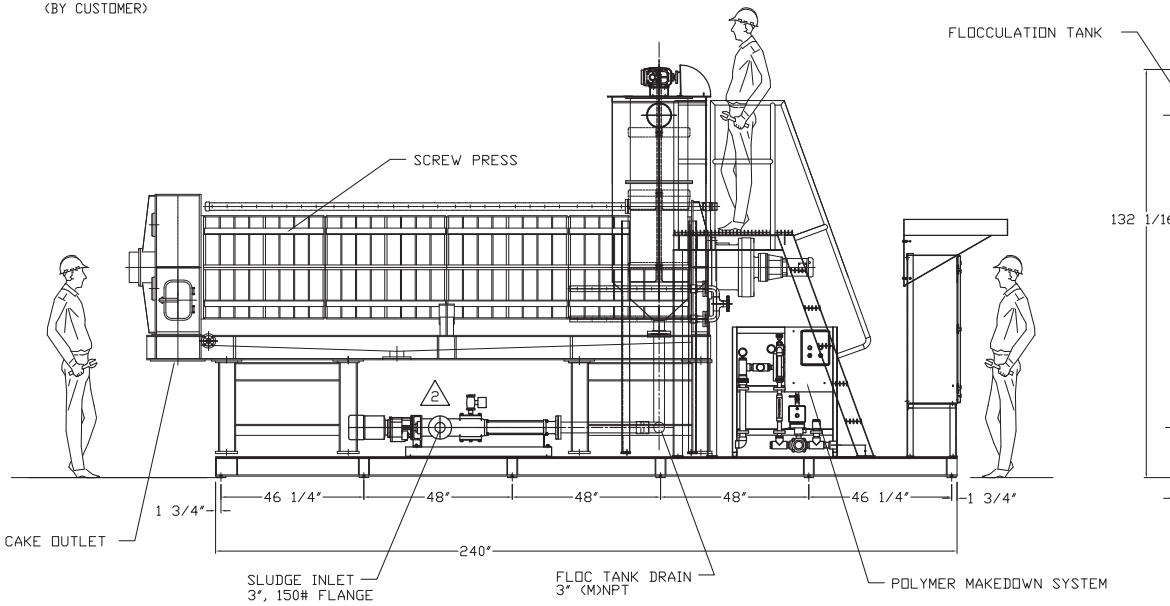

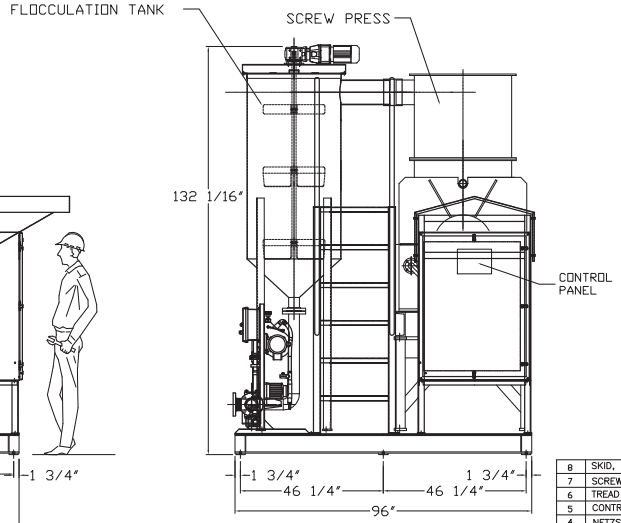

Mark	Description	Operating Weight lbs.
8	SKID, 6061 ALUMINUM	435
7	SCREW CONVEYOR 9"DIA x 6" PITCH	2,300
6	TREAD PLATE, 3/16" x 48" x 24", 6061 ALUMINUM	406
5	CONTROL PANEL 48x36x16 NEMA 4X	500
4	NETZSCH NM 045BY01L07V PUMP	400
3	VELOBLEND MODEL VMN-2.5D-600-C / NM045BY01L07V	350
2	175 GAL FLOCCULATION TANK	12,000
1	FKC SHX-700X4000L SCREW PRESS	14,125

JOB No. SKD-241	Messrs.	Quantity	Scale 1/15
Drawing No. F241-901	Title SHX-700X4000L DEWATERING SKID	Date 09/17/09	
		Drawn by	AH
			Ref. JOB No.

FKC CO., LTD.
2708 W. 18TH ST.
PORT ANGELES, WA 98362
(360) 452-9472 FAX (360) 452-6880

SHEET 1 OF 1

TOTAL SKID WEIGHT = 30,516 LBS

No.	Alteration	Date	Sign.
2	Revised Pump Inlet	03/1/11	RD
1	Corrected Pump	02/16/11	RD
0	Issued for Approval	02/09/11	RD

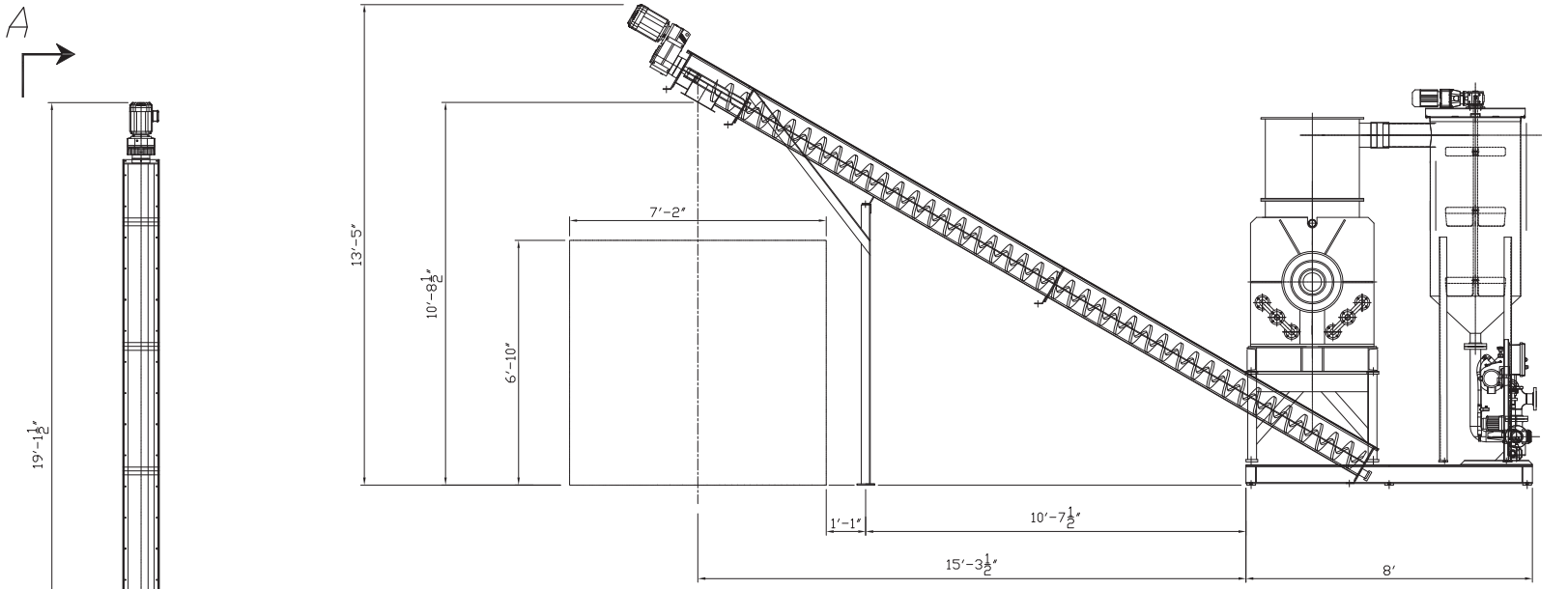

ELEVATION VIEW A-A

PLAN VIEW

No.	Alteration	Date	Sign.
0	Issued for Approval	02/09/11	RO

Mark	Description		Operating Weight lbs.
JOB No. SKD-241	Messrs. Avon Park WWTP Avon Park, FL	Quantity	Scale 1/15
Drawing No. F241-902	Title DEWATERING SKID WITH CONVEYOR	Date 09/17/09	
		Drawn by AH	
			Ref. JOB No.

FKC CO., LTD.
2708 W. 18TH ST.
PORT ANGELES, WA 98362
(360) 452-9472 FAX (360) 452-6880

SHEET 1 OF 1

FKC Co., Ltd.
2708 West 18th Street
Port Angeles, WA 98363
Phone: (360)452-9472
Fax: (360)452-6880
e-mail:mail@fkcscrewpress.com

On-site Trial Requirements

1. Power: 460 or 575 volt, three-phase power is required to the test trailer power connection. The total amp requirement will be < 20 amps.

2. Water: One ¾" water hose to the trial unit for polymer make-down, steam generation, rotary screen thickener shower water, and wash-down is required.

3. Sludge Supply: A sludge line to the sludge feed tank inlet valve located at the rear of the trailer is necessary. If there are 2 or more materials to be mixed for dewatering, separate lines are required for each sludge. Each trailer carries a portable poly tank which can be used to mix sludges.

4. Kerosene: Five gallons of kerosene should be provided to power the boiler for steam generation if steam use testing is to be done.

5. Other: A bin place next to the trailer for cake disposal is helpful. Usually 100–200 lbs./hr of dewatered material will be produced. 100" of 2½" hose is carried on the trailer for sludge supply and filtrate drainage.

6. Cost: The cost for an on-site test is the cost of one-way trailer transportation plus airfare for two FKC technicians to the airport nearest the work site.

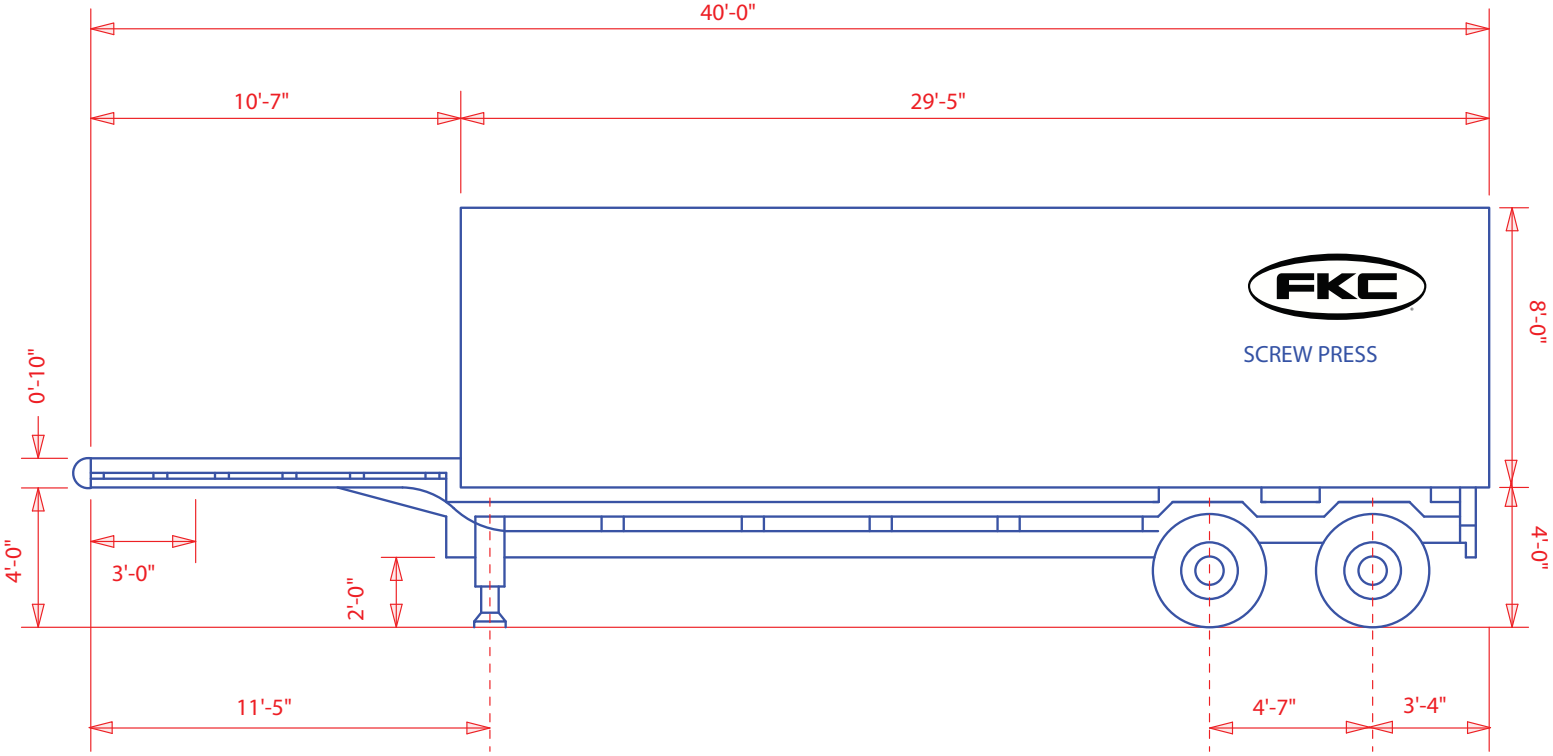

Mark	Description	Material	pcs.	Weight kg.	Remarks
JOB No.	Messrs. REFERENCE			Quantity	Scale
Drawing No.	Title Test Trailer			Date / Drawn by TB	Ref. JOB No.
FKC	FKC CO., LTD. P.O. BOX 1677 OR 2708 W. 18TH ST. PORT ANGELES, WA 98362 (360) 452-9472 FAX (360) 452-6880			REVISION 1	SHEET 1 OF 1

No.	Alteration	Date	Sign.

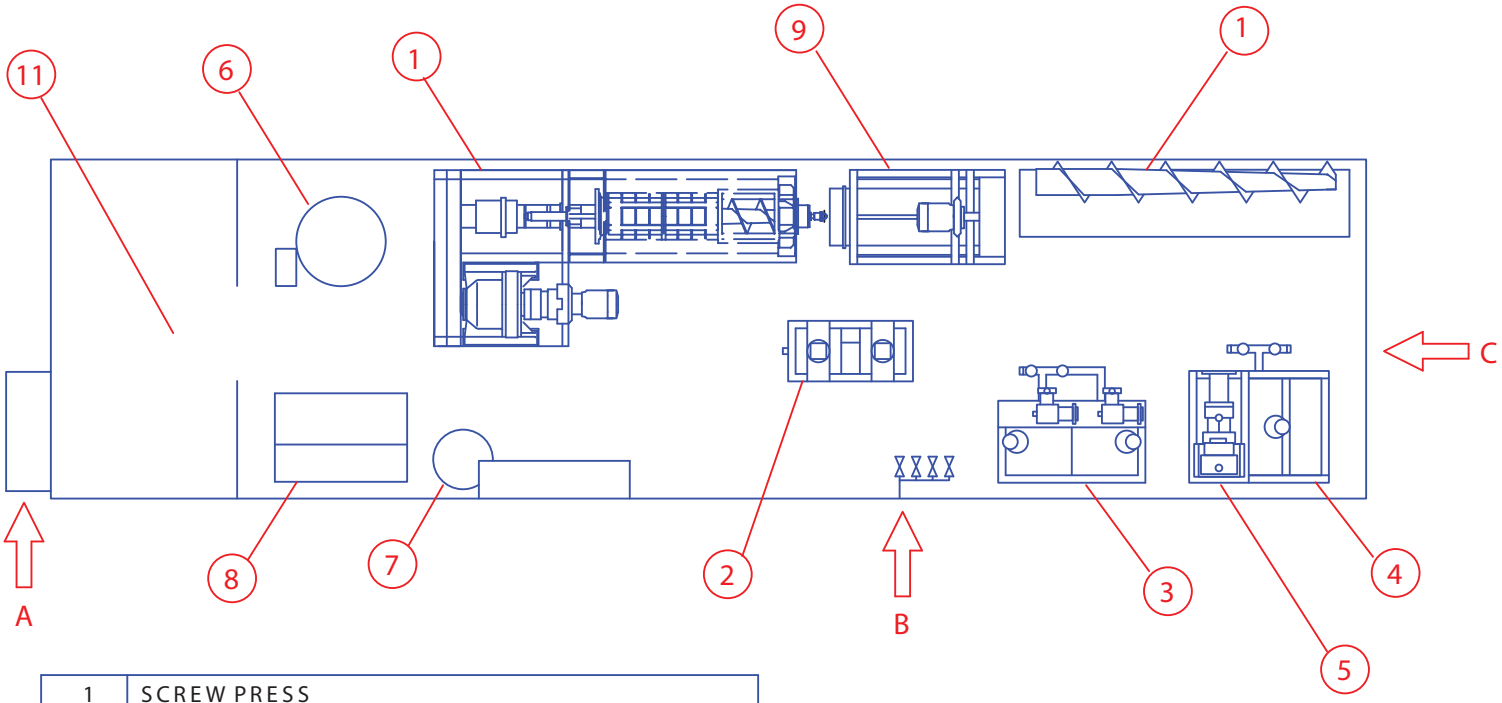

1	SCREW PRESS
2	FLOCCULATION TANKS W/ AGITATORS
3	POLYMER TANKS W/ AGITATORS
4	SLUDGE TANK W/ AGITATOR
5	SLUDGE FEED PUMP
6	BOILER
7	BOILER FUEL TANK
8	CONTROL PANEL
9	ROTARY SCREEN THICKNER
10	SPARE SCREWS SHELVING
11	LAB

A	ELECTRICAL CONNECTION 575V or 480V / 3 PH
B	WATER CONNECTION 3/4" NPT
C	SLUDGE CONNECTION 2 1/2" FEMALE CAMLOCK

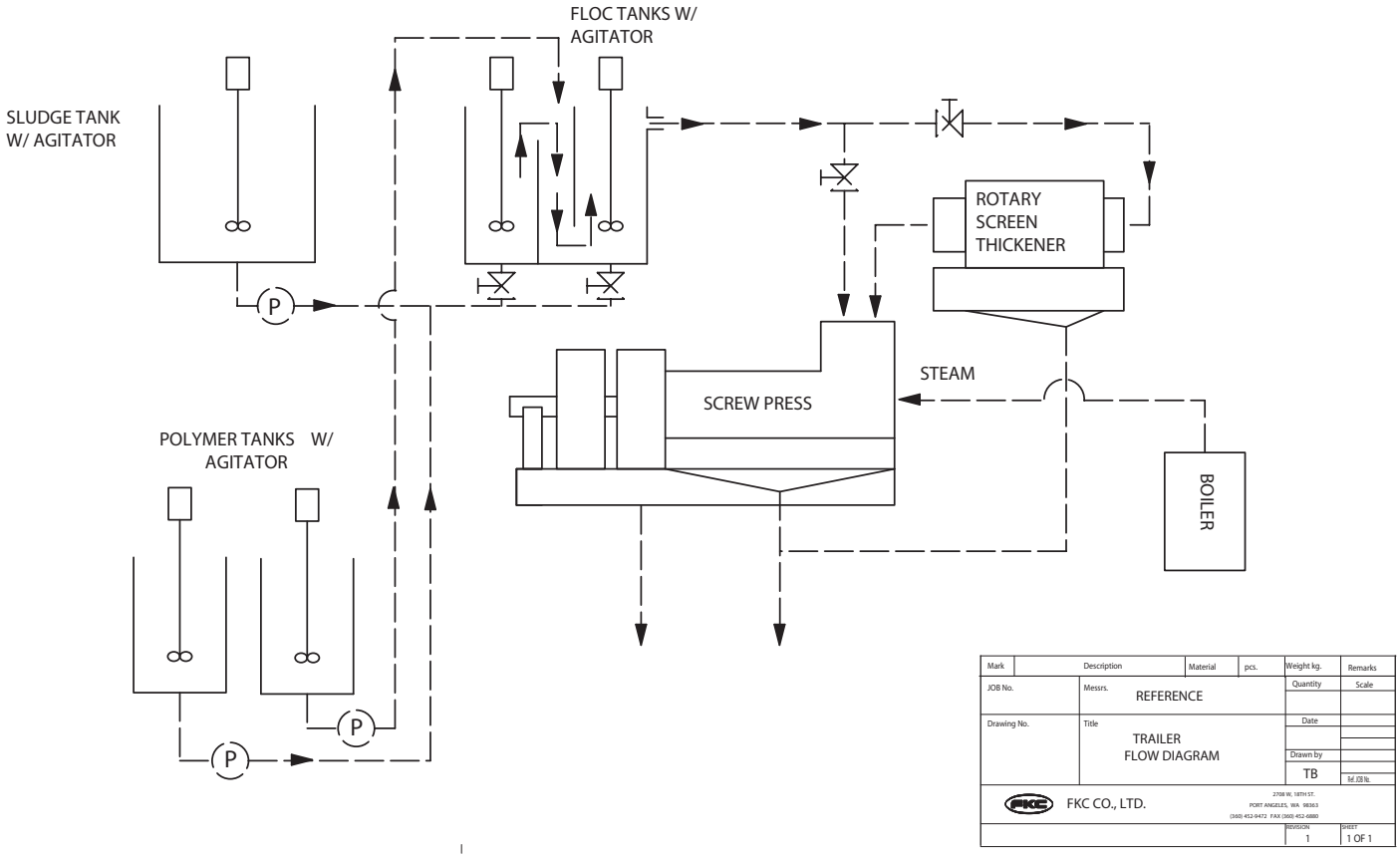

Attachment H: Fournier Industries, Inc.

FOURNIER INDUSTRIES INC.

Laboratory Analyses

Boulder-Betasso Water Plant
Colorado
USA

October 24th-2013

RESULTS

Sludge: ***Water Plant***

- ***Shipping Date:*** ***October-14th-2013***
- ***Receiving Date:*** ***October-21st-2013***
- ***Analysing Date:*** ***October-22nd-2013***

Technician Name: ***François Turcotte***

Total Solids	***0.62 %***
Total Suspended Solids	***0.59 %***
Solids in Solution	***0.03%***
Volatile Solids / Total Solids	***57.02 %***
Polymer Consumption	***12.5 lbs / dry ton of solid***
Polymer Type	***Emulsion Anionic C-1592pg***
Total Fiber + 100 mesh	***1.41 %***
pH	***7.08 PH at 67.5 ° F***

Cloth Wiring Test:

Cloth Wiring Test With Polymer	***8.93%***

Limit Dryness:

Limit Dryness With Polymer	***Past through the system***

Notes:	- ***Reasonable polymer dosage required*** - ***Medium drainage but past through the cloth (no friction for opening restrictor)*** - ***Extremely low fiber presence*** - ***Very low potential for the Fournier Rotary Press***

Note: The listed data are based on laboratory results obtained during trials, but must not be interpreted as a contractual guarantee.

FOURNIER INDUSTRIES INC., 3787 West Frontenac blvd, Thetford Mines (Quebec), G6H 2B5 Tel. (418) 423-4241 • Fax (418) 423-7366
E-Mail: general@fournierindustries.com Web Site: www.rotary-press.com Lic. RBQ 1187-5754-87

Thetford Mines (Qc) Canada
October-24th, 2013

EXPECTED PERFORMANCE

Sludge origin ..... :	*Boulder-Betasso water plant* Colorado USA
Kind of sludge ..... :	Water plant
Anticipated performances ..... :	20 dry lbs/ hr/ channel 6 GPM/ channel
Cake dryness ..... :	8.5 % (TS)
Type of channel..... :	(900/1000CV) 36 Optimum

Note: **The production in dry lbs/hr/channel is based on a 0.62 %TS sludge**. The production, cake dryness or flow rate could vary depending upon (%TS) contained in the feed sludge.

Provided sludge represents a poor potential for the Fournier Rotary Press technology. The Rotary Press is a continuous dewatering process that requires very minimum supervision at start-up. The equipment is capable of shutting down and washes itself without operator assistance. The equipment can be commanded to stop dewatering at a specific time or based on low sludge level availability.

Note: ***The listed data are based on laboratory results obtained during trials, but must not be interpreted as a contractual guarantee.***

FOURNIER INDUSTRIES INC., 3787 West Frontenac blvd, Thetford Mines (Quebec), G6H 2B5 Tel. (418) 423-4241 • Fax (418) 423-7366
E-Mail: general@fournierindustries.com Web Site: www.rotary-press.com Lic. RBQ 1187-5754-87

OPTIMUM-CV ROTARY PRESS DEWATERING...

Municipal and Industrial Waste Water Applications

fournier

THE FOURNIER PRESS TECHNOLOGY

The FOURNIER PRESS is in the forefront of municipal and industrial sludge dewatering technology.

The principle of operation is simple. Sludge is fed into a rectangular channel, and rotates between two parallel revolving stainless steel chrome plated screens. The filtrate passes through the screens as the flocculated sludge advances within the channel. The sludge continues to dewater as it travels around the channel, eventually forming a cake near the outlet side of the press. The frictional force of the slow moving screens, coupled with the controlled outlet restriction, results in the extrusion of a very dry cake.

The benefits derived from using the FOURNIER ROTARY PRESS have been well documented and are translated into huge savings for the customer by means of performance, operation and maintenance.

fournier

HOW IT WORKS...

Sludge is fed at low pressure into a space between two parallel filtering elements.

As the free water comes away from the sludge, solids accumulate in the channel until enough pressure is generated against the outlet gate.

The filtering element's slow speed rotation generates enough back pressure to dewater the remaining solids and extrude a dry cake.

Low maintenance, low power consumption and reduced polymer usage translate into lower operating costs.

Principle of operation

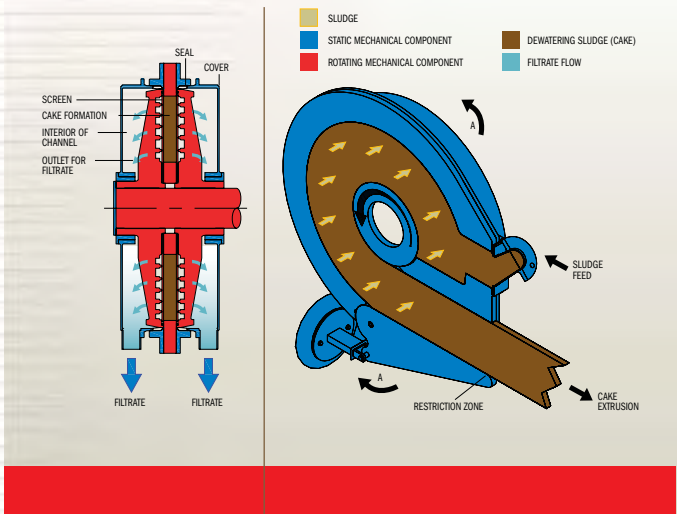

ADVANTAGES

- > Totally enclosed
- > Low odor levels
- > Low speed
- > Little maintenance
- > Low power consumption
- > Small footprint
- > New Optimized 36" dia. channel surpasses previous models

Performance

- Consistently high cake dryness
- Competitive throughput
- High capture rates
- Reduced airborne contaminants

Operation

- Continuous process
- Equipment totally enclosed with reduced odor concerns
- Easy start-up and shut-down procedures
- Very simple to operate
- Requires very little supervision
- Can be completely automated and remotely controlled

Maintenance

- Robust construction
- Small number of mechanical parts
- Slow rotation speed
- Reduced corrosive exposure to nearby equipment
- Automated 5 minutes/day self-cleaning cycle (optional)

Economy

- Savings on final disposal costs
- Minimal space requirements
- Low maintenance costs
- Reduced labor costs
- Low energy consumption
- Low potable water usage

THE NEW CV-OPTIMUM PRESS

The Fournier CV-Optimum Rotary Dewatering Press is the latest development in the 20-year history of the technology.

Winner of the 2002 WEF Innovative Technology Award, this Canadian invention has undergone several upgrades over the years.

From the first version, involving a large shaft-mounted gear unit, large support bearings and base, the units are now manufactured with a 36” diameter dewatering channel that far surpasses earlier versions.

A single-width channel has now proven itself able to dewater all varieties of sludge, allowing a single machine to be used anywhere, without physical modification.

With more than 140 units installed and running in over a dozen countries, the Fournier Rotary Press is the market leader in its category.

A dedicated team of more than 160 employees approaches each new year as a challenge, charged with finding new ways to improve the current model without increasing costs.

A large parts inventory is maintained for all previous models of the Rotary Press, ensuring that customers who enjoy their own model year can rest assured they will always be able to obtain replacement parts.

Retro-fit kits are available for those customers wishing to upgrade their unit to the newest technology available.

Expandability

Another unique feature of the Rotary Press is the ability to order units that can be expanded at a future date. This allows customers to benefit from lower capital cost at time of purchase and flexible expansion as the need arises. Common configurations are 1 to 2 channel(s), 2 to 4 channel(s) and 4 to 6 channel(s); however any combination of channels can be obtained, up to the maximum of 6 channels per machine.

SPECIFICATIONS

1 DEWATERING UNIT
2 GEAR UNIT
3 FEED INLET
4 MOTOR
5 FILTRATE DISCHARGE
6 CAKE OUTLET
7 BASE

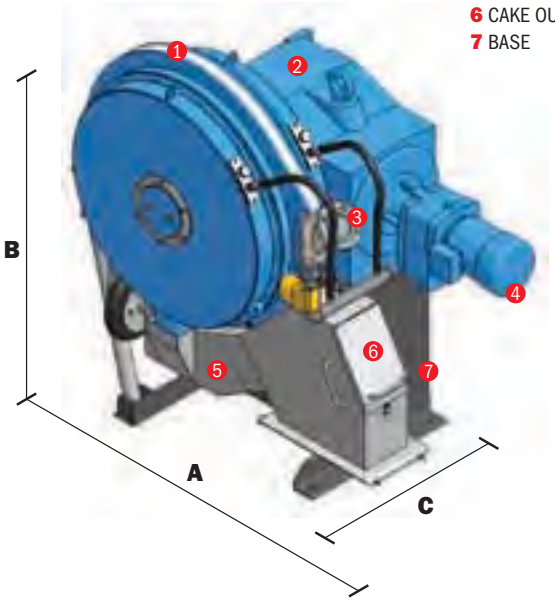

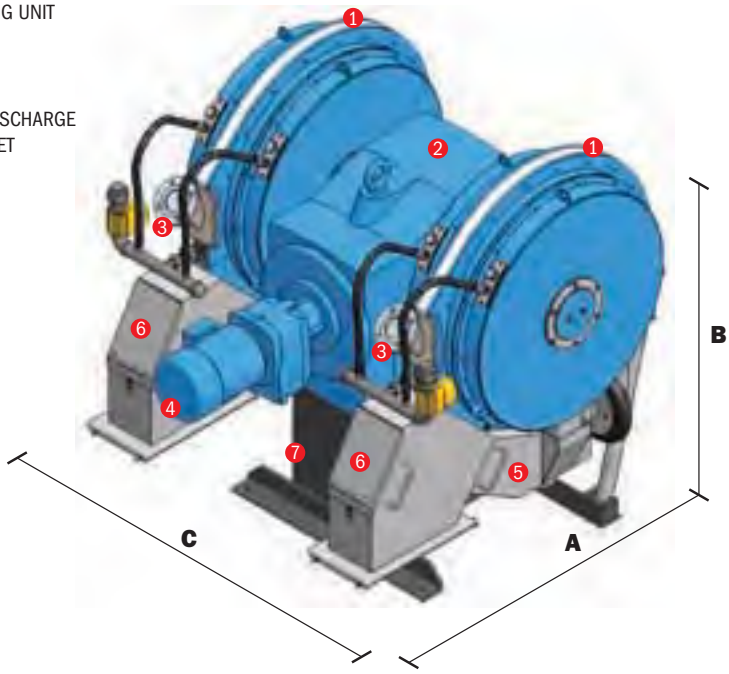

MODEL NO.	MODEL		DEWATERING AREA Ft^2 (m^2)	DIMENSIONS In. (mm)			WEIGHT Lb (kg)	MOTOR HP (kW)
	CHANNEL	WHEEL Ø In. (mm)		A	B	C		
1-900/1000CV	1	36 (900)	10,8 (1,00)	70,3 (1785)	72,0 (1830)	40,5 (1028)	4559 (2068)	5,0 (3,7)
2-900/2000CV	2	36 (900)	21,5 (2,00)	77,5 (1969)	72,0 (1830)	64,8 (1646)	7967 (3614)	7,5 (5,6)
3-900/3000CV	3	36 (900)	32,3 (3,00)	79,0 (2007)	72,0 (1830)	85,8 (2180)	10128 (4594)	10,0 (7,5)

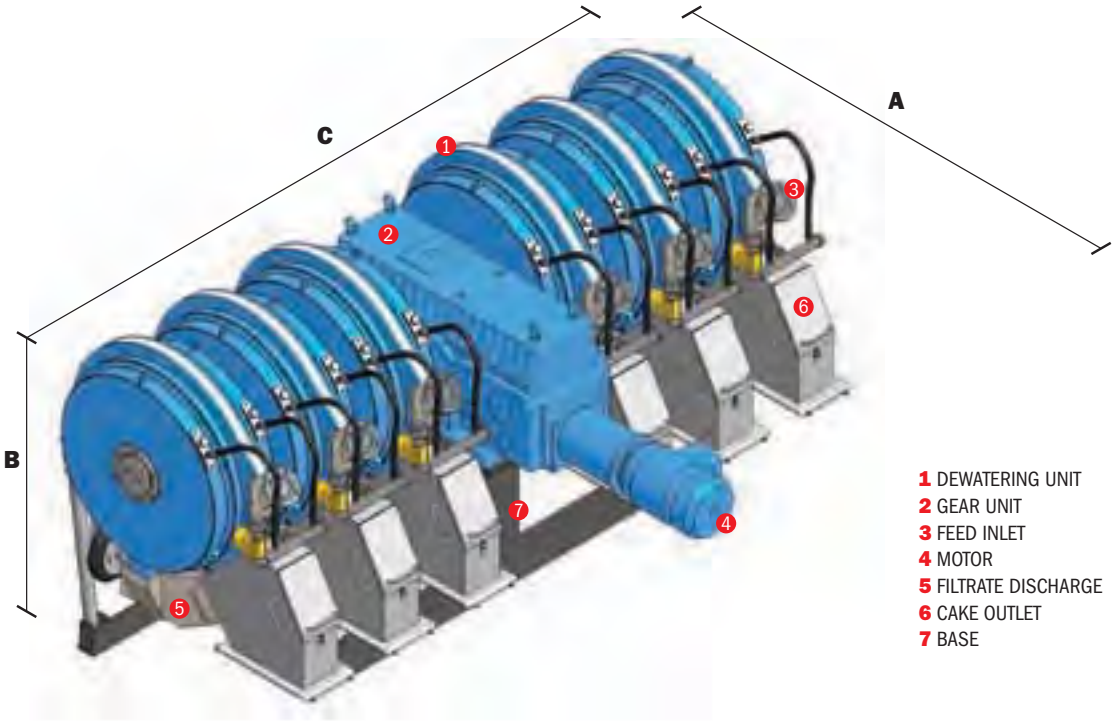

1 DEWATERING UNIT
2 GEAR UNIT
3 FEED INLET
4 MOTOR
5 FILTRATE DISCHARGE
6 CAKE OUTLET
7 BASE

MODEL NO.	MODEL		DEWATERING AREA Ft^2 (m^2)	DIMENSIONS In. (mm)			WEIGHT Lb (kg)	MOTOR HP (kW)
	CHANNEL	WHEEL Ø In. (mm)		A	B	C		
4-900/4000CV	4	36 (900)	43,1 (4,00)	91,3 (2320)	75,4 (1915)	101,6 (2580)	12377 (5614)	15,0 (11,1)
5-900/5000CV	5	36 (900)	53,8 (5,00)	92,8 (2358)	75,4 (1915)	123,0 (3124)	14581 (6614)	20,0 (15,0)
6-900/6000CV	6	36 (900)	64,6 (6,00)	92,8 (2358)	75,4 (1915)	144,4 (3668)	16676 (7564)	20,0 (15,0)

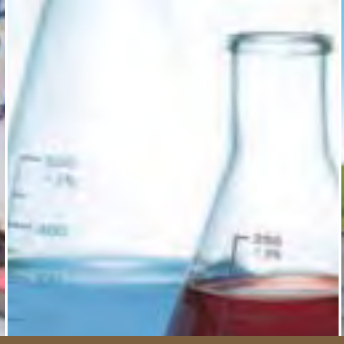

CUTTING EDGE TECHNOLOGY

Process schematic

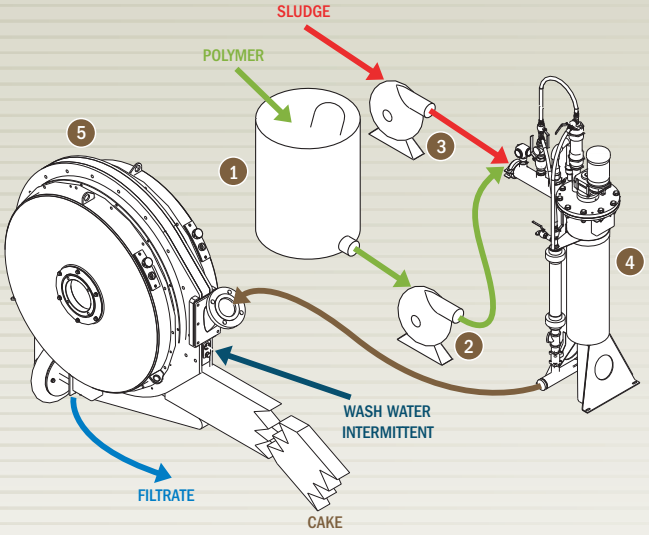

Fournier Industries inc. specializes in the manufacturing of mechanical equipment and has done so since 1960. The company's technical abilities and expertise involve design, lab and pilot testing, commissioning and training. The FOURNIER PRESS' performance can be demonstrated through the use of our mobile units.

Resulting from many years of research and development, the technical advances implemented in the FOURNIER PRESS are well demonstrated in numerous applications throughout the world. Due to its reliability, the FOURNIER ROTARY PRESS requires very little supervision. It is the only dewatering technology that is safe for stand-alone automatic operation and can be monitored and operated by remote control.

1	**Polymer Storage Tank**
2	**Polymer Metering Pump**
3	**Sludge Feed Pump**
4	**Flocculator**
5	**Rotary Press**

Full-size Pilot Machine
Our utilization of a full-scale pilot eliminates the need for uncertain scale-up values in the final installation. What you see is what you get!

ISO-9001 : 2000
Fournier Industries inc. is an ISO-registered manufacturer, assuring the highest level of quality-control. All parts are subjected to rigorous verification before they are installed in your machine.

ACCESSORIES & MORE

Polymer feed systems

A wide variety of manual and fully automatic liquid and dry-feed polymer systems are available.

Off-the-shelf units as well as custom systems respond to every customer's individual needs.

From the smallest flow to clarifier-feed systems, any size can be quickly assembled and shipped to your site or included for delivery with your dewatering system.

Shaftless screw conveyors

Custom-engineered for your application, hollow-flight (or shaftless) screw conveyors can be fitted with any accessory for total plant automation.

Standard screw sizes from 8" to 16" allow a variety of feed rates for different size systems.

Lengths from 10 ft to over 100 ft can be combined for virtually any layout.

Sludge blenders and other accessories

Having many years of custom-fabrication experience, our engineering staff can tackle any project and provide a complete package solution to your biosolids handling application.

Truck bodies and customized mobile containers can be equipped with a host of features particular to your requirements, allowing you to optimize your operation for the most beneficial use.

Spare Parts Inventory
Fournier Industries inc. maintains a full inventory of spare parts for all models of our Rotary Press. Our parts department can ship orders for next day delivery within much of continental North America.

Machining Capability
Many large multi-function machining centres are used in the manufacturing of Rotary Press components.

Production Capabilities
Parts for Rotary Presses are produced in series. This allows us to reduce production costs and improve quality of the individual components.

Expertise since 1960

Fournier Industries Inc. has been manufacturing machinery since 1960. At our head office and factory, located in the Quebec mining area, we continue to provide quality products and service to a wide range of international customers.

Printed in Canada GRAPHISSIMO

Your local representative

FOURNIER INDUSTRIES INC.

3787 West Frontenac blvd, Thetford Mines
Quebec, Canada G6H 2B5

Phone: (418) 423-4241
Fax: (418) 423-7366

general@fournierindustries.com

www.rotary-press.com

Attachment I: GE Water & Process Technologies

GE
Water & Process Technologies

Budget Proposal for the

City of Boulder WTP - Backwash Water Treatment System

Z-BOX™-L Ultrafiltration Water Treatment System

Submitted to:
Brown and Caldwell

Attention: John Bratby, Ph.D., P.E., Vice President – Senior Process Engineer

October, 2013

Proposal Number: 880370

Submitted by:
ZENON Environmental Corporation d/b/a GE Water & Process Technologies
Grant McInnis - Regional Sales Manager

Local Representation by:
Water Technology Group
Brian Dieke

GE Water & Process Technologies
Confidential and Proprietary Information

GE Water & Process Technologies ("Seller") submits the information contained in this document for evaluation by Brown and Caldwell and the City of Boulder ("Buyer") only. Buyer agrees not to reveal its contents except to those in Buyers organization necessary for evaluation. Copies of this document may not be made without the prior written consent of Sellers Management. If the preceding is not acceptable to Buyer, this document shall be returned to Seller.

Table of Contents

1 Technical and Engineering Details 4
1.1 Basis of Design 4
1.2 Proposed System Configuration 6
2 System Process Description and Scope 7
2.1 Z-BOX™–L Process Description 7
2.2 Scope of Supply by GE 9
3 Commercial Offer 12
3.1 Pricing 12
3.2 Equipment Shipment and Delivery 12
3.3 Freight 12
3.4 Bonds 12
3.5 Pricing Notes 13
3.6 Conditional Offering 13

1 Technical and Engineering Details

1.1 Basis of Design

GE proposes a Z-BOX™-L128 Ultrafiltration Water Treatment System for the City of Boulder WTP Backwash Water Treatment System project, designed to treat up to a maximum feed flow of 200,000 gpd.

The UF system is to treat water supplied under sufficient pressure, by others, from the existing sedimentation basin (blowdown), in order to reduce the volume of water being sent to the existing drying ponds. The pressurized feed passes through the backwashable strainer prior to the inlet to the membrane tank. The treated UF permeate will be sent to the head of the existing water treatment plant. The discharge pressure required from the UF system is unknown at this time and should be confirmed in order to determine if the proposed permeate pump has sufficient head available. The backwash and cleaning wastes from the UF system will be collected and disposed of by others.

This proposal is based on the following design conditions and feed water quality parameters.

Design Conditions

Design Minimum Temperature	1°C
Design Capacity With All Trains In Service At ≥1°C	200,000 gpd (max) 100,000 gpd (avg)
Recovery (at design capacity)	93%

Note 1: The membrane filtration system proposed as part of this offer is designed to operate under the following Firm Capacity conditions:

- The single system train must be available for production at all times during the day, except during backwashes and maintenance cleans, on order to treat maximum design feed flow. Daily production capacity is reduced the train is in recovery clean or off line for maintenance.

Note 2: The membrane system proposed as part of this offer is designed to operate under the following hydraulic conditions:

- The flow rate upstream of the membranes can be varied or there is enough equalization volume in the upstream processes to accommodate the interruptions in flow due to the different operating modes of the membrane system (i.e. backwashes, maintenance cleans). The system produces no permeate and accepts no feed at any time when the single train is not in production mode.

Note 3: The recovery objective of the system can be achieved during steady state operation over the course of a 24-hour period and may be affected by repeated standby events. The recovery objective is to be met at the maximum design capacity. Operation under lower flow scenarios increases the proportion of chemical waste over backwash waste, which under certain conditions may impact the ability of the system to meet its recovery objective.

Physical Parameters

The design of the proposed system is based on the following blowdown water quality parameters from the sedimentation basin:

Parameter	Specified or Assumed Note 1	Units	Average	Minimum	Maximum
Alkalinity	Assumed	mg/L as $CaCO_3$	70	50	100
Total Hardness	Assumed	mg/L as $CaCO_3$	65	60	70
pH	Assumed	-	7	6	8
Temperature	Assumed	°C	10	1	25
Total Organic Carbon (TOC) Note 1*	Assumed	mg/L	25	10	50
Dissolved Organic Carbon (DOC)	Assumed	mg/L	2	0.5	5
Apparent Color	Assumed	TCU	20	10	45
Turbidity	Assumed	NTU	1000	--	1300
Suspended Solids Note 1 **	Assumed	mg/L	1500	--	2000
Total Dissolved Solids	Assumed	mg/L	150	120	180
Calcium	Assumed	mg/L	20	15	25
Magnesium	Assumed	mg/L	7	5	8
Barium	Assumed	mg/L	0.01	BDL	0.02
Strontium	Assumed	mg/L	0.01	BDL	0.02
Dissolved Iron	Assumed	mg/L	0.1	BDL	0.3
Sulfate	Assumed	mg/L	20	15	25
Dissolved Aluminum	Assumed	mg/L	0.01	BDL	0.02
Dissolved Manganese	Assumed	mg/L	0.01	BDL	0.02
Total Silica (SiO_2)	Assumed	mg/L	0.5	BDL	2
Langelier Saturation Index (LSI)	Assumed	-	Negative	Negative	Negative

Note 1: This column identifies whether the parameters listed in each row are assumed values because they were not supplied to GE during the preparation of this proposal or if the values listed were specified. Unless the Engineer or Buyer provides alternate water quality data prior to award of contract, the assumed water quality parameters are considered accepted by the Buyer upon issuance of contract.

*It is assumed that >90% of TOC is bound with coagulant from sedimentation process.

** The maximum value of 2,000 mg/l of TSS was specified. However the average value was assumed for the design of the system proposed herein.

Note 2: The use of any chemicals added to the treatment process (i.e. polymers, flocculants, coagulants, coagulant aids, oxidants, acids, bases etc.) that may come in contact with the

ZeeWeed® membranes must be approved by GE prior to use as part of this proposal or at a subsequent date later on during plant operation.

Note 3: Screening to 500 microns is required upstream of the membrane system. Only punched holes or woven mesh style screens are acceptable. Wedge wire screens are not acceptable and any temporary unscreened bypass is not allowed. All tanks, clarifiers, settlers, channels, etc. following the screens are to be covered and protected from the outside elements such that no leaves, twigs or any foreign materials can enter the membrane tank.

Note 4: The plant is designed assuming that no streams such as backwash or chemical wastes from the membrane system or any other unit operations in other parts of the plant are directly or indirectly recycled back ahead of the membrane system (this does not refer to the design feed stream from the sedimentation basin blowdown, as described herein).

1.2 Proposed System Configuration

The proposed system configuration has been based on the water quality as shown in Section 1.1.

Parameter	Quantity
Type of Z-BOX™ System	Z-BOX™ L-128
Type of Membrane	ZeeWeed® 500
Module Surface Area	340 ft^2
Number of Z-BOX™ Trains	1
Number of Installed Modules per Train	64/64
Maintenance Clean (MC) Protocol	1/day/train 5 times per week using 100 mg/L NaOCl 1 time per week using 1 g/L citric acid with HCl for pH adjustment to 2.2 1 time per week using HCl Maintenance Cleans are not heated
Recovery Clean (RC) Protocol	12/year/train 500 mg/L NaOCl followed by 2 g/L citric acid with hydrochloric acid for pH adjustment to 2.2 Recovery Clean solutions are heated prior to each clean

The cleaning protocol will require adjustment based on the capacity of feed flow being treated. At times of low demand special membrane tank standby procedures will be implemented. Recovery Cleans should be scheduled around times of low treatment demand.

2 System Process Description and Scope

2.1 Z-BOX™–L Process Description

Z-BOX™–L Packaged Plants are pre-engineered, modular water treatment systems that bring proven ZENON ultrafiltration (UF) technology to municipal, industrial, and land development applications. Incorporating an expandable building block design, Z-BOX™ Packaged Plants can be quickly set up in virtually any location and feature scalable treatment capacity that can be rapidly increased as demand grows. These UF systems can outperform conventional treatment alternatives, offering reduced operating costs, smaller plant footprints, more reliable performance, and higher quality effluent.

Z-BOX™ packaged plants bring the proven large-plant features and performance of ZeeWeed® membranes to compact, pre-engineered water treatment systems.

Z-BOX™–L incorporates immersed, low pressure ZeeWeed® 500 UF membranes, which are densely packed into modular components to maximize surface area. The membranes replace the solids separation function of granular filter media and clarifiers found in conventional systems, resulting in process footprints that are up to 10 times smaller than conventional systems of similar treatment capacity. The Z-BOX™ building-block architecture offers a high degree of flexibility in plant design, enabling greenfield plants to create facilities that best meet site, budget and public expectations. Aging or underperforming plants can also leverage the flexibility of ZeeWeed® to cost-effectively retrofit existing infrastructure with a state-of-the-art membrane system.

Figure 1: Z-BOX™ – L128 Configuration

The hollow-fiber membranes utilize a low-pressure "outside-in" flowpath that reduces energy requirements for permeation, simplifies cleaning methods, and prevents particles from fouling and plugging the inside of the membrane fiber. Raw water is filtered through microscopic pores.

Permeate pumps create the vacuum necessary to draw water through the membrane pores into the hollow fibers. Water then flows through the permeate pump to the treated water storage tank (or distribution system). Periodic backpulsing sustains optimum permeation by reversing the flow of permeate water to dislodge particles from the surface of the fiber. During backpulsing, air is also introduced at the bottom of the membrane modules to create turbulence along the membrane surface. Rising air bubbles scour and clean the outside of the membrane fibers. When necessary, in-tank chemical recovery cleanings can improve membrane permeability.

Membrane tanks, programmable logic controller, motor control panel and all membrane process equipment are incorporated into one condensed, skid–mounted package. Fewer processes, combined with highly automated PLC operation makes plant operation less labor intensive and more straightforward. Plant operators are required to perform regular preventive maintenance on system pumps, blowers, and associated mechanical equipment to ensure optimum membrane performance.

ZeeWeed® UF membranes operate under a low-pressure vacuum, drawing clean water to the inside of the fiber (outside-in flow path), while leaving impurities in the process tank.

ZENON pioneered the use of immersed, hollow-fiber membranes for water treatment and has over a decade of experience in their design, manufacture and sale to customers worldwide.

2.2 Scope of Supply by GE

GE's scope of supply for a Z-BOX™ L-128 Ultrafiltration Water Treatment System, for the City of Boulder Backash Water Treatment project, designed to treat up to a maximum feed flow of 200,000 gpd is as follows:

Quantity	Description
1	Automatic Backwash Strainer, supplied loose, complete with isolation valves, pressure gauges and local control panel
1	Feedwater Turbidimeter Panel Panel is supplied loose, with degassing column, isolation valves, check valve and needle valve installed on the panel
1	Feedwater Flow Meter, supplied loose
64	ZeeWeed® 500 modules
1	Membrane Cassette complete with permeate and air isolation valves
1	Membrane Tank – stainless steel
1	Membrane Tank Feed Flow Control Valve
1	Membrane Tank Drain Flow Valve
1	Membrane Aeration Valve
1	Pressure Transmitter
1	Sets of CIP Circulation Valves
1	Vacuum Ejectors for priming
1	Membrane Tank Level Transmitter
1	Process Pump Skid Each skid includes: - one (1) process pump, also used for backwash, with motor (VFDs included), complete with isolation and check valve, and inlet and discharge pressure gauges. - one (1) set of valves, pressure gauges and pressure switches - includes valve to supply backwash water to the membranes and valves for chemical solution recirculation - one (1) flowmeter - one (1) turbidimeter, panel mounted, complete with required degassing column, isolation and sampling valves (for permeate sampling) - all piping contained on the skid will be PVC
1	Temperature Transmitter, supplied loose
1	Backpulse Tank, supplied loose, complete with associated valves and level transmitter.
2	Aeration Blowers (one (1) duty and one (1) stand-by) with motor (includes motor starter), supplied loose, complete with required flow switches and isolation valves.
1	CIP Tank, supplied loose, complete with associated valves, level and temperature transmitters, and water heating system (electric immersion heater) with local control panel and starter
1	CIP Pump Skid CIP Skid includes: - one (1) duty and one (1) stand-by CIP pump with motors (VFD included) complete with isolation and check valves, inlet and discharge pressure gauges

	and flow meter - dosing ports for all cleaning and neutralization chemicals - one (1) pH analyzer installed with required isolation valves - one (1) chlorine analyzer installed with required isolation valves - all piping contained on the skid will be PVC
1	Sodium Hypochlorite Chemical Feed System Note 1 Includes one (1) panel mounted chemical dosing pump, associated isolation valves, calibration column, pressure relief valve, backpressure valve, pressure gauge and level switch. Piping contained on the panel will be PVC.
1	Citric Acid Chemical Feed System Note 1 Includes one (1) panel mounted chemical dosing pump, associated isolation valves, calibration column, pressure relief valve, backpressure valve, pressure gauge and level switch. Piping contained on the panel will be PVC.
1	Mineral Acid Chemical Feed System Note 1 Includes one (1) panel mounted chemical dosing pump, associated isolation valves, calibration column, pressure relief valve, backpressure valve, pressure gauge and level switch. Piping contained on the panel will be PVC.
1	Sodium Hydroxide Chemical Feed System Note 1 Includes one (1) panel mounted chemical dosing pump, associated isolation valves, calibration column, pressure relief valve, backpressure valve, pressure gauge and level switch. Piping contained on the panel will be PVC.
1	Sodium Bisulfite Chemical Feed System Note 1 Includes one (1) panel mounted chemical dosing pump, associated isolation valves, calibration column, pressure relief valve, backpressure valve, pressure gauge and level switch. Piping contained on the panel will be PVC.
1	Allen-Bradley PLC system complete with one (1) HMI located on the Master Control Panel. Notes 2 and 3 The Master Control Panel (NEMA 4) is located on the Process Pump Skid. The Remote I/O train panel (NEMA 4) are located on the CIP Pump Skid.
Miscellaneous	
1	ZeeWeed® 500 Membrane Repair Station
1	ZeeWeed® 500 Lifting Bracket Note 4
General	
Included	Engineering Services including during the Design Phase of the Project
Included	GE Standard Package - Equipment P&IDs, Electrical and General Arrangement Drawings
Included	GE Standard Package - Operating & Maintenance Manuals
Included	Field Service and Process Start-Up Assistance Note 5
Included	Operator Training Note 5
Included	1 Year Mechanical Warranty on Equipment
Included	10 Year Membrane Warranty (First 2 years are Full Replacement Warranty with the Remaining 8 Years Pro-Rated Warranty)
Included	1 Year 24/7 Emergency Telephone Support Note 6
Included	1 Year InSight – Monitor (monthly) Service Note 6
Included	1 Service Visit During the First Year of Membrane Operation Note 7
Included	Equipment Delivery Note 9

Note 1: It is assumed that all chemical day tanks or totes will be by others. GE's chemical feed pump panels may be wall-mounted over the Customer-supplied tank or tote and draw directly from the tank or tote.

Note 2: A NEMA 4 control panel is located on the Process Pump Skid and on the CIP Pump Skid. The main control panel is the one located on the Process Pump Skid and will contain the PLC. The control panels located on any additional Process Pump Skids and the CIP Pump Skid are "slave" (remote) panels. Communication between the panels utilizes Ethernet connections.

Note 3: Locally mounted VFDs included, as detailed herein. Plant MCC and SCADA by others.

Note 4: In order to remove a cassette from the membrane tank the lifting bracket must be attached to the top of the cassette. The cassette can then be lifted from the membrane tank using a monorail/bridge crane (by others).

Note 5: 25 days on site over 3 trips have been included for equipment off-loading and installation assistance, commissioning and start-up assistance, membrane installation assistance, operator training, and performance testing.

Note 6: Includes data acquisition computer and software set-up. To receive complete 24/7 Emergency Telephone Technical Support Service and allow for InSight Monitor/Trend Service, a suitable, secure remote internet connection, by Buyer, is required.

Note 7: Each service visit is 2 days on-site.

Note 8: No spare parts have been included. A recommended spare parts list can be generated by GE's Spare Parts Department and provided to the Customer as a price adder once GE's scope of supply has been finalized.

Note 9: Plant instrument air provided by others, to provide air for solenoid valves and air ejectors and any other miscellaneous system compressed air requirements.

Note 10: Refer to **Section 3.3** for Freight Terms.

3 Commercial Offer

3.1 Pricing

Pricing for the proposed equipment and services as described in this budget proposal:

Budgetary System Price **$ 846,500 USD**

All pricing is based on the operating conditions and influent feed water analysis detailed in Section 1. The pricing herein is for budgetary purposes only and does not constitute an offer of sale.

3.2 Equipment Shipment and Delivery

Equipment shipment is estimated at 32 to 36 weeks after order acceptance. The Buyer and Seller will arrange a kick off meeting after contract acceptance to develop a firm shipment schedule.

Typical Drawing Submission and Equipment Shipment Schedule

		6-8 weeks	2 weeks	24-26 weeks		2 weeks
Acceptance of PO						
Submission of Drawings						
Drawings Approval						
Equipment Manufacturing						
Equipment Shipment						
Plant Operations Manuals						

The delivery schedule is presented based on current workload backlogs and production capacity. This estimated delivery schedule assumes no more than two weeks for Buyer review of submittal drawings. Any delays in Buyer approvals or requested changes may result in additional charges and/or delay to the schedule.

3.3 Freight

The following freight terms used are as defined by INCOTERMS 2010.

All pricing is CIP designated **City of Boulder WTP** site. Delivery to the project site is conditional upon provision of access roads of a nature that will permit access by tractor-trailers. Off-loading and positioning of equipment at the job site is not included.

3.4 Bonds

Performance or Payment Bonds are not included in the system price. These bonds can be purchased on request but will be at additional cost.

3.5 Pricing Notes

- All prices quoted are in **USD**.
- Any applicable sales or value added tax is not included.
- The Buyer will pay all applicable Local, State, or Federal taxes and Duties.
- The equipment delivery date, start date, and date of commencement of operations are to be negotiated.
- Commercial Terms and Conditions shall be in accordance with Seller's Standard Terms and Conditions of Sale.

3.6 Conditional Offering

Buyer understands that this proposal has been issued based upon the information provided by Buyer, and currently available to Seller, at the time of proposal issuance. Any changes or discrepancies in site conditions (including but not limited to system influent characteristics, changes in Environmental Health and Safety ("EH&S") conditions, and/or newly discovered EH&S concerns, Buyer's financial standing, Buyer's requirements, or any other relevant change, or discrepancy in, the factual basis upon which this proposal was created, may lead to changes in the offering, including but not limited to changes in pricing, warranties, quoted specifications, or terms and conditions. Seller's offering in this proposal is conditioned upon a full Seller EH&S, and Buyer financial review.

Attachment J: Huber Technology

Date: **October 31st, 2013**

To: **Whom it may concern**

Reference: **Betasso WTP in Boulder, CO**

Subject: **Bench testing for dewatering application**

Sludge Characteristics

The Betasso Water Treatment Plant (WTP) sludge had the following characteristics:

Sludge Type: Storage Only
Solid content: 0.86%
TDS: approximately 200 mg/l (0.02%)
Volatile Solids: 51.36%
pH: 6.02
Chloride: 0 mg/l
Phosphate: 5 mg/l
Ammonium: 3 mg/l
Nitrite: 0 mg/l
Nitrate: 0 mg/l

Testing

To determine the suitability of a Huber Technology screw press for dewatering sludge at the Betasso WTP, several bench tests were carried out to evaluate suitable polymers and the reaction they have with the sample materials provided. Our goal was to create flocculent that would be suitable for dewatering under pressure utilizing a screw press.

To test the different polymers the following procedure is used:

- Measure out 200ml of product into a suitable mixing vessel.
- Add polymer in multiples 5ml and mix thoroughly, always watching for a reaction.
    - Polymer solution is created in batches consisting of 200ml water and 1ml of neat polymer to create a 0.5% active solution.(50% active polymer content)
- If no reaction occurs a different polymer type is tried.
- The free water is drained off after a reaction has occurred and the sludge has created some good strong floccs.
- Squeeze the drained flocculated sludge forcing as much water out as possible without losing any of the flocculated sludge.
- As the sludge solidifies more gradually increase the pressure to squeeze as much water out as possible.
- Once all the free water is removed place the sample in a clean and well-marked sample dish.

- Weigh the empty dish to get an initial weight and record the result.
- Weigh the dish containing the sludge and record the result.
- The above procedure should be done for different polymers and quantities that produce good quality floccs.
- These samples should then be baked at approximately 105°C for at least 6 hours to evaporate all the remaining moisture.
- After baking the samples, the sample dishes should be weighed again to allow calculation of their respective dry solids contents before the baking process.

Multiple polymers were tested in an attempt to find a suitable selection for creating strong floccs. The polymers tested are supplied by (FBS) Fort Bend Services.

Polymer name: Cationic: FBS 3100

Test Results

The product FBS 3100 was the polymer that performed the best. Sufficient separation of solids and water was observed throughout the tests. The flocculation was very stable and easy to dewater when using approximately 14 - 18 lbs. active / dry ton of the polymer.

The cake solids can be expected to be: > 22% DS

The capture rate of the filtrate can be expected to be: > 95%

Polymer consumption can be expected to be: 14 – 18 lbs. active / dry ton

Conclusions

Based on the bench test results it appears that the sludge at the Betasso WTP can be dewatered very easily with the Huber screw press.

The polymer consumption is expected to be between 14 – 18 lbs. active / dry ton. The achievable cake solids are expected to be better than 22% DS provided that the solids content sludge chemical characteristics are consistent with the sample provided. The FBS 3100 polymer used for bench testing is an NSF approved polymer for drinking water WTP's.

Huber Technology appreciates the opportunity to perform the preliminary bench tests and provide our initial findings. If there are any questions at all, please don't hesitate to contact us.

Best regards,

Jon McGraw
Pilot Program Manager

HUBER TECHNOLOGY

ROTAMAT®
Screw Press RoS 3

Screw Press for the dewatering of municipal and industrial sludge

- Compact and entirely enclosed machine
- Efficient and reliable operation with minimum operator attendance
- Low operating costs
- Long life, made of stainless steel

The Quality Company – Worldwide

Features

Liquid sludge is pumped to the flocculation reactor of the screw press. A polymer station prepares a polymer solution from powder or liquid polymer. The diluted polymer is introduced through a dosing ring in the feed sludge line, and is intensively mixed with the sludge in a static inline mixer.

Strong sludge flocs are formed in the flocculation reactor, wherefrom the flocculated sludge overflows into up to three screw presses.

The screw press comprises of an inclined wedge section basket with a 0.01" (0.25 mm) spacing. A slowly rotating screw, with variable speed, conveys the sludge slowly upwards through the inclined basket. The screw flights are provided with brushes for continuous internal cleaning of the wedge section basket. Periodically the wedge section basket is also cleaned from the outside with spray water. Spray bars rotate around the basket, but within the machine.

A lower wider section of the basket serves as pre-dewatering zone where free water drains by gravity. A second section of the basket with a smaller diameter serves as pressure zone. Here the sludge is compressed between narrowing flights of the screw. The pressure in the pressure zone is controlled by the position of a cone at the discharge end of the basket. The dewatered sludge is driven through the gap between the cone and the basket and drops as sludge cake on a conveyor or directly into a dumpster. Two or three screw presses can be installed in parallel, with a single sludge feed pump, polymer station and flocculation reactor.

Performance

- Cake solids: 20 to 25 %*
- Hydraulic capacity: 45 gpm (10 m3/h)**
- Solids capacity: 600 lb/h (275 kg/h)**
- Solids capture rate: > 95%
- Polymer consumption: 8 to 12 lbs/ton (4 to 6 kg/t)*
- Wash water consumption: < 98 gph (370 l/h) **
- Power consumption: < 1.5 kW**

* common municipal wastewater sludge
** per screw press

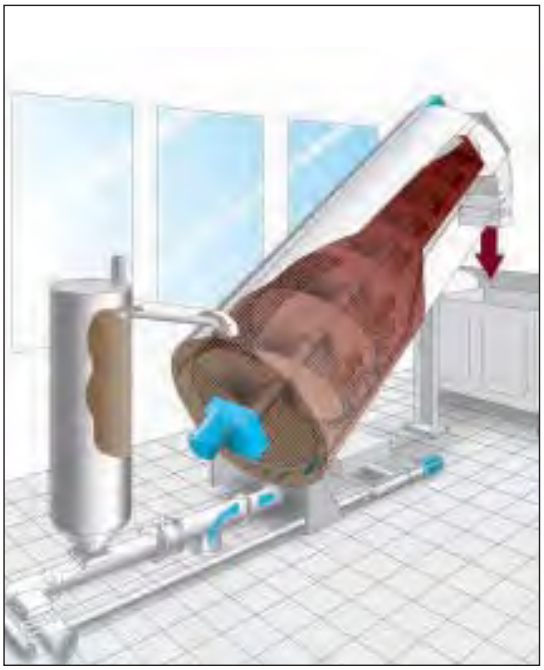

Benefits

- Coarse material does not impair the machine and its operation
- Fully enclosed system prevents odor nuisance and health & safety hazards
- No noise, no vibration
- No need for wash-down
- Little operator attendance due to automatic operation
- Low power, polymer and wash water consumptions
- Low operating costs
- Low wear and maintenance
- Made of stainless steel, pickled in an acid bath

HUBER TECHNOLOGY, Inc.

9805 NorthCross Center Ct.
Suite H
Huntersville, NC 28078

Phone: (704) 949 - 1010
Fax: (704) 949 - 1020
huber@hhusa.net
http://www.huber-technology.com

Subject to technical modification

ROTAMAT®
Screw Press RoS 3

RoS3Q Inclined Screw Press

Case Study:
Cardston WWTP, Alberta

Huber's Screw Press Helps Cardston WWTP Make Positive Impact on Community

***"The Huber Screw Press has become the premiere piece of equipment in this plant. If we had known the quality of Huber's solutions, we would have chosen their fine screens over the ones that we selected a few years ago."* Barton W. Atwood, Water & Wastewater Utilities Foreman**

The City of Cardston's Wastewater Treatment Plant is aging yet still performs well in providing the services that its population needs. The close knit community has had some issues with odors from the WWTP but it is a trade-off for free fertilizer the plant provides to local barley farmers.

One of the ways that Cardston has maintained WWTP performance is by employing leading technology within the wastewater treatment process. What the citizens of Cardston didn't know was that when the WWTP chose to install Huber's RoS3Q Screw Press, it would not only improve performance, but it would also change the plant's role in the community.
Water and Wastewater Utilities Foreman, Bart Atwood, had researched liquid separation solutions and formulated these goals for implementing new press technology:

- **Upgrade to current technology**
- **Improve the quality of end-products (water and biosolids)**
- **Reduce odors that caused community complaints**
- **Reduce costs associated with separation/pressing**
- **Increase efficiency for operators**

"I would never grab a handful of end product before in my bare hand – but I will now because it never leaves residue on my hands and it doesn't stink. With the belt press, my hand would have been filthy. The screw press processes our sludge dry and clean so that it doesn't even get you dirty. You can put your nose right up to it and there is no smell at all."

"The Huber screw press in particular is quiet and there is a minimal amount of water used for washing. Water conservation has been huge. We've gone from using 150 cubic meters a day to 100 cubic meters a week. The electrical demand is also much less than that of other presses out there. Overall, Huber's solution produces great results in conserving water and power."

"The odorless factor is tremendous and undoubtedly the most obvious to our community. This was a huge worry for me because I wanted to make our process better for our neighbors. With Huber's screw press, we have no odor complaints from the community. We want to be good citizens of the community. Eliminating odor was part one of that.

Issues:
Bart's existing belt press represents the old approach to liquid separation. There are new approaches to this process that include the screw press and centrifuge. Bart's research led him to the conclusion that the screw press type of solution would best help him meet his goals.

After visiting several installations of Huber's RoS3Q – and observing its simple yet effective operation firsthand – Bart made the decision to bring the Huber technology into the Cardston plant.

Solution:
Bart and his team immediately noticed the small footprint of the RoS3Q. The new screw press took up less than half the space that the old belt press had occupied. This was striking for the operations team but not as striking as the fraction of time they needed to spend managing the screw press. While the belt press needed constant attention, the screw press required nothing past being turned on and off.

It seemed to Bart that he had gotten an additional team member because one of his operators was freed from the duty of tending the belt press.

There was another notable difference with the new technology: No odor. The screw press more effectively separates the water from the biosolids – practically creating a dryer solid end-product. The resulting water is cleaner than the water that comes into the headworks and produces no gaseous odor as it is fed back into the channel as the water does in the belt press process. This was critical for Bart in fulfilling his goal of improving the plant's impact on the community.

The premiere piece of equipment in the plant
The RoS3Q performs so efficiently that is has become the star of the

Part two is the conservation aspect of our system. We like it when we hear that our community admires our efforts."

"The screw press also demands less from our transportation resources. There is less biosolids to haul away. Since we store our bisolids for 2 years prior to using them for land application as fertilizer, the screw press also helps us reduce our costs to store our biosolids."

show for Bart's team. The cost savings alone could earn it notoriety. After all, the savings impact man hours, transportation, storages and resources.

- It saves Bart's team time because it requires *no* operational management.
- It saves in trucking costs, spreading costs and storage costs because the biosolids are dryer and easier to handle.
  Prior to the RoS3Q, Bart's trucks ran two times a day. After implementing the RoS3Q this schedule was reduced to two times per week.
- It helps Cardston conserve water and electricity by requiring less of each to operate.

My team loves the automation built into our Screw Press. If you ask them what their favorite feature is, they will say, "Are you kidding? Absolutely, it's the fact that I can turn it on or off from home!"

The automation bonus

The automation built into the RoS3Q gives Bart's team freedom. They are able to control shutdown and startup by just logging in. So issues that would have previously brought them into the plant from home during the night can be stopped remotely and addressed by the morning shift without impact to performance, maintenance or daily flow.

"Huber's extensive knowledge shows through in the products they build. They understand the needs of a plant as far as quality and durability. You can literally see the expertise. They also understand the need for simplicity in the plant – components need to be simple to use, maintain and clean."

Obvious benefits keep aging plant competitive

Cardston WWTP has realized the powerful benefits of the RoS3Q. Although Cardston WWTP is older (30 years of operation) than some of the treatment plants of neighboring cities, it maintains its competitiveness – even in sensitive areas such as compliance. Cardston WWTP's chemical compliance test results have improved since installing the RoS3Q. Their compliance was never jeopardized with previous technology, but, as Bart notes, it is always good to have a wider margin in that area.

The RoS3Q is a solution that performs liquid/solid separation that:

- Requires less space
- Operates quietly
- Is *really* odorless
- Conserves water and power
- Is simple to maintain, operate

CITY OF CARDSTON

City of Cardston Wastewater Treatment Plant
Location: Cardston, Alberta, Canada
Website: http://cardston.ca/residents/fees-rates-taxes/utilities
Facilities: 1
RoS3Q® Screw Press

The WWTP has a plant capacity of 11,000 cubic meters per day and manages an average daily flow of 4450 cubic meters.

The facility, which was built in 1983, has direct inflow from distribution system. The process is simple – a grinder with no preliminary treatment – sending direct screening to an RBC basin. Secondary treatment is provided by clarifiers - the end treatment of the water. From the clarifiers send biosolids to digesters where they are aerated and pressed out for land application.

Industry insight enables Huber to gear its solutions to the demands and concerns of the wastewater treatment plant environment. For example, consider corrosion and simplicity. Corrosion is a big concern within an environment that is wrought with it. Huber manufactures everything from stainless steel so that corrosion is never a factor. Performance in a WWTP plummets when any component isn't simple for users to manage. Huber designs simplicity into every aspect of its solutions.

Becoming a good community citizen

Of utmost importance to Bart of implementing Huber's RoS3Q is how it has helped the plant become a better citizen of the Cardston community. While the conservation benefits in both water and energy have caught the attention of the neighbors, the most shocking change has been in the absence of odor surrounding the plant and its fertilizer. No longer do residents complain about foul smells emitted from the plant nor do they hold their noses when a plant truck makes a fertilizer delivery to a local farmer.

Four performance factors help Cardston WWTP become a better citizen:

1. Water usage has dropped from 150 cubic meters a day to 100 cubic meters a week.
2. Electricity demands are much less than with the previous belt press system.
3. Fewer truck routes to deliver biosolids reduce fuel consumption.
4. Cleaner processing eliminates odors that are offensive to neighbors

Durability, reliability and support

The RoS3Q is rock solid. Its stainless steel design keeps the screw press in mint condition. Its performance gives Bart and his team total confidence that the RoS3Q will just work. They can depend on it. Huber's customer support is also rock solid. The Cardston team can depend on immediate responses at the rare points that they actually need answers or help. Huber's support experts are available with assistance. When deeper expertise is required, Huber connects the best resources with the customer.

Huber's experience with municipalities and with wastewater processes is extensive as is its knowledge of the technologies it provides. This industry-technology insight allows Huber to work with organizations to ensure that systems are geared to perfectly match up to immediate tactical challenges and long-term strategic goals.

9735 NorthCross Center Court, Suite A
Huntersville, NC 28078
Office (704) 949-1010 | Fax (704) 949-1020
www.huber-technology.com

Attachment K: Parkson Corporation

1401 West Cypress Creek Road
Suite 100
Fort Lauderdale FL 33309-1969

Phone 1.888.PARKSON
Fax 954.974.6182

11/11/2013

Attn: John Bratby

Re: Boulder Betasso WTP Residuals Handling

Dear Mr. Bratby,

Parkson Corporation is pleased to provide a quotation for our ThickTech™ rotary drum thickener (RDT) per the Boulder Betasso WTP Residuals Handling project. All requested information is included with this letter, along with other items which detail our offering for this project.

The ThickTech RDT offers many advantages over other thickeners on the market. In addition to having the most installations (over 200 units), the longest history (over 20 years) and robust, high quality manufacturing made in America, the Parkson ThickTech™ uses less polymer than any other RDT on the market. For an RDT, more money is spent on polymer than for anything else in the system. Polymer costs more than electricity, supporting equipment, and can be up to 10 times the cost of the RDT itself! Although this is by far the highest cost item, it is regularly overlooked when selecting an RDT while focus is made on the comparative capital cost, which is a small fraction of the overall lifecycle costs.

As an example, the lifecycle polymer for a single 400 gpm unit thickening 1% sludge could range anywhere from $1,339,767 to $6,698,834 depending upon which thickener is used. These numbers represent the difference between dosing at 5 lbs/dry-ton and 25 lbs/dry-ton over 20 years, adjusting for a 3% net discount rate and using an average cost of $2.00/lb of polymer (active). In this scenario, a single pound difference in polymer dose equates to $267,953. This is more than the unit itself, just for a single pound of polymer over the lifecycle. So as can be seen, it is crucially important to pick the best performing unit.

Why the Parkson ThickTech uses so much less polymer is pretty elementary. It comes down to screening material, flocculation tank design and internal tank components (which is explained in more detail below). In addition to the mechanical advantages, the unsurpassed level of experience held by Parkson guarantees the best design and set up specific to individual characteristics of the project, which includes selecting the right polymer and setting up all the equipment to operate optimally.

As stated above; making sure that the best performing unit (the one that uses the least polymer) is selected is very important. Of the RDT designs out there now, the required polymer dose to achieve 5-6% solids ranges anywhere from 5-30 lbs /dry-ton. That is lbs of active polymer per dry ton of sludge treated. The amount of polymer required is highly dependent upon screen type. Woven wire mesh has the most open area and therefore requires the least amount of polymer. Next down the line is wedge wire (which uses about twice the polymer) and third is perforated plate which uses a little more than wedge wire. This is apparent when looking at pictures of these screening materials. The open area of the woven wire mesh is significantly higher, as shown below:

Woven Wire Mesh - Parkson

Wedge Wire

Perforated Sheet

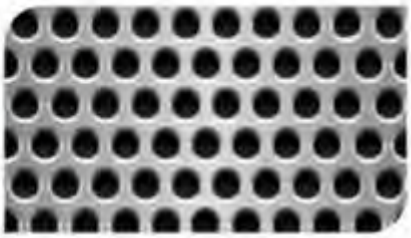

So, although woven wire mesh screens can be a little more expensive up front, they save a lot of money down the line. The second most important features are those within the drum. It's important to roll, flip and turn the sludge over to get most of the water out as efficiently as possible. Below is a picture of the Parkson drum showing these features compared to our two leading competitors (a wedge wire and perforated sheet drum).

Parkson Drum

Wedge Wire Drum

Perforated Sheet Drum

There are two critical items to notice about the above photographs. One is mentioned previously and that is the amount of open area in the screening material. More open area equates to more area for water to separate from the sludge; and therefore less required polymer. The openings can be the exact same size in the above examples, but the woven wire mesh will have more total openings, giving a larger area for water to escape. Second are the internal components. Think about a gold prospector using a hand held sieve to separate rocks and water; do they hold them perfectly still? The answer is no, because that wouldn't be very efficient. The same applies here. If the sludge is not flipped, rolled and turned, you aren't going to get efficient separation and will then need to add more (very expensive) polymer. Below is a picture of the Parkson drum with these features noted:

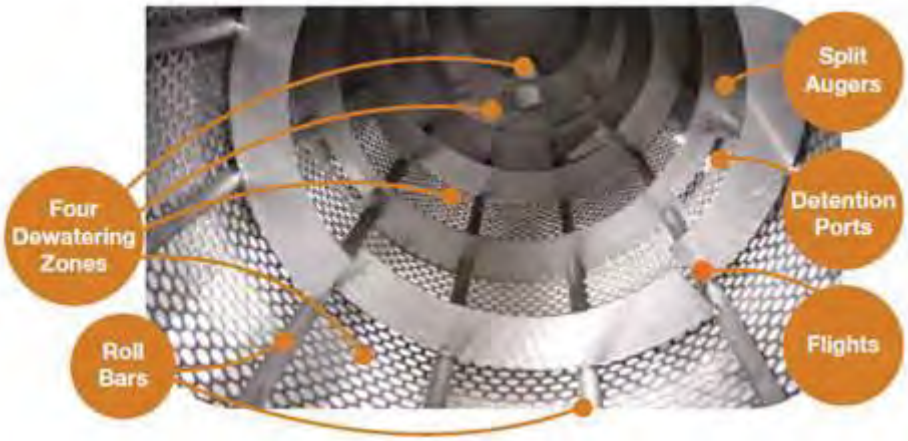

Thank you for considering the comments I have provided above. Should you have any questions at all I would appreciate the opportunity to talk with you and provide answers.

Sincere Regards,

Omar Gadalla, PE
RDT Product Manager

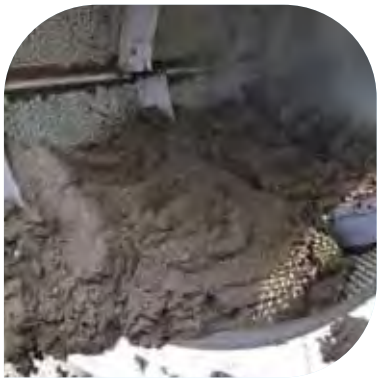

Parkson™
Treating Water Right

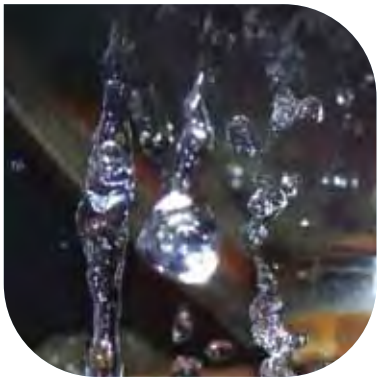

ThickTech™

Rotary Drum Thickener

- Low polymer usage: major cost savings vs. competitors
- High capture rate
- Compact footprint
- Minimal operator attention required
- Low operations and maintenance cost

Why Thicken Sludge

Thickening sludge increases digester capacity, reduces hauling costs and can be used as a pre-thickener to increase capacity of other dewatering equipment. Example: 192,000 gallons can be reduced to 13,440 gallons of sludge per day (0.5% to 7% solids at 400 gpm).

The Parkson ThickTech™ Rotary Drum Thickener (RDT) is the industry leading sludge thickener. This is due to unmatched performance with sludge volume reduction of 90% and a 98% capture rate. In addition, this superior performance is completed using very low amounts of polymer. The ThickTech™ system is quite compact and requires less floor space than other thickeners. It is economical to operate due to low horsepower, low water consumption and low polymer requirements.

Why Rotary Drum Thickeners

- Fully enclosed – clean
- Odor control capability
- Smaller footprint
- Indoor/outdoor installation
- Ease of operation
- Low polymer usage

Why Choose the Parkson ThickTech™

- Industry leading performance
- Quality
- Superior design
- Experience: over 200 ThickTech™ installations

How the ThickTech™ Outperforms Other RDTs

Superior Drum Design

Staged Screens:

- Dewatering occurs in four distinct dewatering stages divided by split augers
- Woven wire mesh size can be changed between stages to maximize dewatering

Roll Bars:

- Flip sludge for additional water removal

Woven Wire Mesh Filtration Media:

- Provides significantly more open area than wedge wire or perforated plate
- Easily removable

Other Special Features:

- Perforated stainless steel support media
- Split augers
- Detention rings with ports to adjust sludge detention time
- Self-cleaning spray header

Low Shear Flocculation Tank

Tangential inlet and outlet: all polymer mixing occurs prior to the sludge entering the flocculation tank. The tank is where the sludge and polymer mixture flocculates together before entering the drum. It is critical that detention time, but not mixing occurs. By having the inlet and outlet tangential to the tank, the Parkson ThickTech™ design maximizes flocculation.

Cost Savings Through Superior Design

A 400 GPM ThickTech™ RDT can save users ~$860,000 or more in reduced polymer consumption over a 15-year period vs. a leading competitor. Savings are based on a side-by-side pilot test conducted by an independent third party.

Summary of Comparison Report
(ThickTech™ vs. Leading Competitor)

	Parkson	Competitor
Inlet sludge	400 GPM @ 0.95-1.37% solids	400 GPM @ 0.95-1.37% solids
Thickened sludge	6.6%	6.6%
Polymer use	72 lbs/day	168 lbs/day
Polymer cost (@ $2/lb)	$52,458/year $645,028/15 years*	$122,402/year $1,505,065/15 years*

* 3% net discount rate

General Performance Specifications

Capacity	25 GPM – 400 GPM (25, 50, 100, 150, 200, 300 and 400)
Inlet flow	0.5% - 1.5% solids
Outlet flow	5% - 8% solids
Typical polymer usage	5-10 lbs (100% active)/ton of sludge (dry wt.)
Solids capture	98%+

Polymer Cost by Dose

Polymer use	Cost over 10 years	10-year difference from base case	
5 lbs/Dry-Ton	$520,416	$0	Parkson ThickTech™ dose range
10 lbs/Dry-Ton	$1,040,832	$520,416	
15 lbs/Dry-Ton	$1,561,260	$1,040,844	
20 lbs/Dry-Ton	$2,081,680	$1,561,264	Polymer dose of competitors
25 lbs/Dry-Ton	$2,602,100	$2,081,684	
30 lbs/Dry-Ton	$3,122,520	$2,602,104	
35 lbs/Dry-Ton	$3,642,940	$3,122,524	

* This table is based on 1,000 GPM @ 1.0% solids inlet sludge concentration

Screening Material

The ThickTech™ way

Woven wire mesh has more open area and better water release for more efficient thickening.

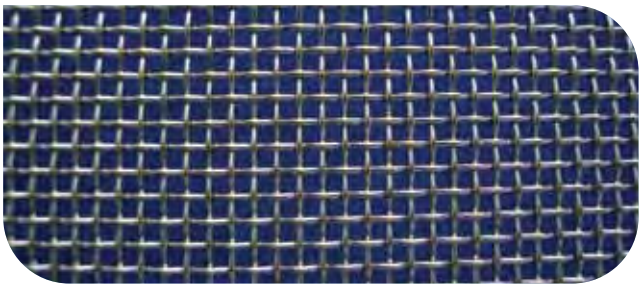

The competition

Perforated sheet and wedge wire drums have significantly less open area and lower solids capture.

Flocculation Tank Design

The ThickTech™ Way

Maximum detention time with low fluid shear.

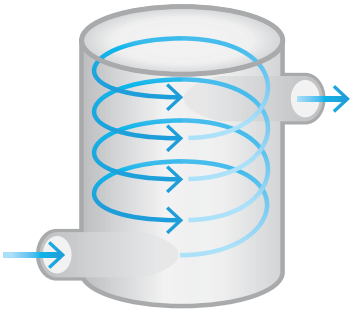

The competition

Direct inlet and outlets cause turbulence and fluid shear that break up and reduce floc development.

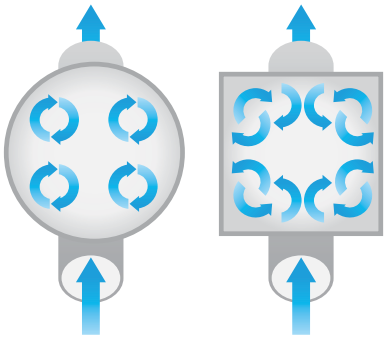

Internal Drum Components

The ThickTech™ Way

Internal drum components such as roll bars, split augers, flights and detention ports roll, flip and detain sludge for maximum water release.

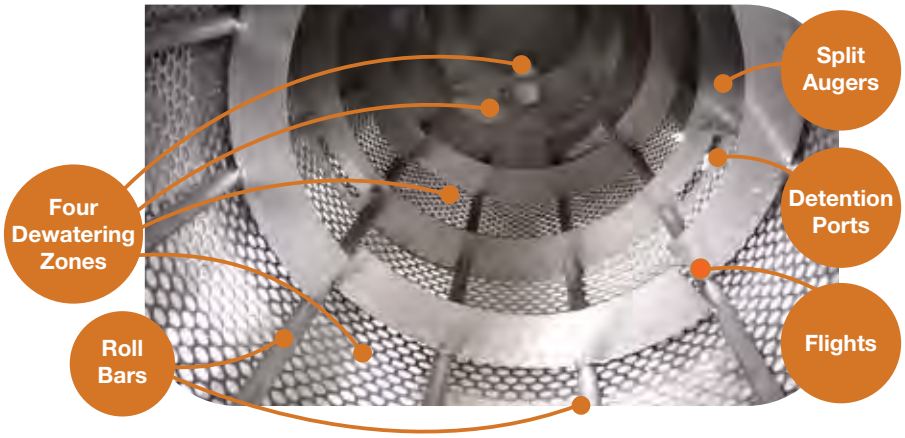

Parkson™
Treating Water Right

50 YEARS 2010

Fort Lauderdale
Chicago
Montreal
Dubai
Mumbai

1.888.PARKSON
thicktech@parkson.com
www.parkson.com

SLDG-RDT_030212

SECTION FIVE

Hycor® ThickTech™ Unit
MAINTENANCE

⚠ DANGER ⚠

REVIEW ALL SAFETY PRACTICES LISTED IN SECTION ONE BEFORE PROCEEDING.

THIS EQUIPMENT MUST BE OPERATED AND MAINTAINED ONLY BY AUTHORIZED PERSONNEL WHO HAVE READ AND UNDERSTAND THE OPERATOR'S MANUAL, HAVE BEEN TRAINED IN ITS USE, AND FOLLOWING ANY AND ALL APPLICABLE SAFETY PROCEDURES.

TO PREVENT SERIOUS INJURY OR DEATH:

- **FOLLOW LOCK OUT PROCEDURES BEFORE SERVICING: LOCK OUT POWER WITH PADLOCK FOR WHICH ONLY YOU HAVE THE KEY.**

Follow the maintenance schedule below to extend the lifetime of your machine and decrease overall operating costs at your plant.

Frequent visual inspections of the liquid/solid separation process and mechanical operation of the ThickTech unit should be performed on a regular basis. A visual check for proper liquid/solid separation should be conducted at least once per operating shift. More frequent observation may be needed, depending on the specific application.
(See page 5-5.)

Daily

General Visual Inspection:

Verify proper flow distribution to the screen cylinder and that no obstructions are present. Check that liquid/solid separation is taking place and that the solids are being transported to the solids discharge point. Confirm rotation of screen is smooth and no flat spots on trunnion wheels or cylinder exist.

Inspect and Lubricate Chain:

Inspect the operation of the chain relative to the drive and driven sprocket. It is recommended that the chain be lubricated once every 24 hours of operation. Reference Lubrication Chart (page 5-6)

Inspect and Lubricate Trunnion Wheels:

Check to verify trunnion wheels are rotating smoothly. Grease the trunnion wheels with 2 to 3 pumps from a grease gun. In applications where the sludge contains high grit, grease the trunnion wheels once per shift to keep sand out of the bearing raceways.

Cleaning:

Rinse accumulated solids off unit. Make sure rotary drum screen is clean after shutdown. The rotary drum wire screen must be kept free of dried sludge. Dried sludge will blind the screen and be difficult to remove. For shutdowns less than three hours (shorter where conditions dry the sludge faster), the ThickTech unit can be stopped without going through the clean up procedure outlined in the Unit Operations section of the manual. Clean other components as needed.

Inspect Spray Nozzles:

Visually check to confirm that nozzles are clear and produce proper spray pattern on the screen. Where plant water is used, the spray nozzles may need to be checked more often.

If nozzle blockage is discovered, cleaning the spray header is accomplished by turning the spray header handwheel. Turning the handwheel rotates wire brushes inside the spray header that sweep solids clear of the spray nozzles. Simultaneously, turning the handwheel opens the valve at the end of the spray header allowing the water and solids to bypass the nozzles and discharge into the return water tank or discharge end enclosure. Leave the bypass valve open for at least 15 seconds to ensure all solids have been discharged.

<u>Weekly</u>

Inspect screens for solids or damage:

Inspect screens for solids blinding especially in applications involving large amounts of grease. If necessary, wash screens with a high-pressure sprayer. Inspect screens for tears or damage, if replacement is needed refer to page 6-4.

Clean interior of equipment:

Remove all spray panels and wash off their inside surfaces. Clean out the inlet flume running from the flock tank to the rotary drum, and wash all solids from the step down header at the end of the inlet flume. Drain the flock tank and wash all solids from the bottom and off the flock drive paddles.

Monthly

Check Gear Reducer Oil Levels:

Remove the oil level plugs in reducers and check oil level. If necessary, add oil to bring to proper level.

Inspect Drum Cylinder:

Visually check for any damage or holes in the screen on the drum cylinder.

Inspect Chain, Drive, Driven and Tensioner (Idler) Sprockets:

The chain drives typically need periodic tightening. The ThickTech chain drive has been provided with a chain-tensioning sprocket to take up any slack as the chain wears. Verify proper engagement of chain into sprockets and check for wear of sprockets.

Inspect Trunnion and Stabilizer Wheels:

Visually inspect support trunnion wheels and bearings for misalignment and excessive wear. The outside diameter of the wheel should never be less than 7.50" on the RDT 200, 300, and 400 units. On the RDT 50, 100, and 150 units the wheel diameter should never be less than 5.75". **Allowing the wheel to wear to an unacceptable diameter will result in severe rotary drum damage.** Adjust or replace if necessary. Lubricate per daily requirements. The support wheels are UHMW polyethylene with stainless steel sleeve and ball bearings.

Inspect the horizontal stabilizer wheels for misalignment and excessive wear. The bushing inside diameter should not exceed 0.56". The horizontal stabilizer wheels do not require lubrication. The horizontal wheels are stainless steel with oil impregnated bronze bushings. Replace if necessary.

Semi-Annually

Check Gear Reducer Output Shafts:

Check gear reducer output shafts of drum and flock drives for abnormal play.

Annually

Inspect Solenoid Valve (Where Applicable):

Inspect inlet spray wash inlet solenoid valve for proper operation.

Change Oil in Gear Reducers:

Refer to Lubrication Chart (page 5-6) for proper lubrication requirements and Section Nine – C. for further gearmotor drive information.

Gear Reducer Bearing Lubrication:

Bearings are grease-packed at the factory and are to be cleaned and re-greased as required. Grease packed bearings should be cleaned and re-greased every 10,000 hours or 20,000 hours for synthetic grease. Input (high speed) bearings should not be over-greased. They should be filled with grease not to exceed 1/3 of the bearing's free volume. For output bearings, fill to 2/3 of their free volume. Refer to Lubrication Chart for proper lubrication requirements and Section Nine – C. for further gearmotor drive information.

Inspect and Clean Unit:

Drain the flock tank, flush and clean unit as required. Inspect the unit thoroughly and repair or replace damaged or worn parts as necessary.

Clean and Re-lubricate Chain:

Remove all excess lubrication and debris from the chain and re-lubricate. Inspect drive and driven sprockets for wear and possible replacement. Refer to Lubrication Chart (page 5-6) for proper lubricant.

Washwater Booster Pump Lubrication:

No lubrication is required for the liquid end of any Burks pump. Motors are equipped with ball bearings that are grease-packed and sealed at the factory. No additional lubrication is required. Base-mounted pumps have ball bearings in the Power Frame Assembly that are grease-packed at the factory and have provisions for re-lubrication as required. For continuous operation, lubricate annually. For intermittent operation, lubricate every two years. Do not over lubricate. Refer to Lubrication Chart (page 5-6) for proper lubricant. See Component Data in Section Nine – A. for more information.

MAINTENANCE SCHEDULE

PROCEDURE	DAILY	WEEKLY	MONTHLY	SEMI-ANNUALLY	ANNUALLY
General visual inspection	●				
Inspect and lubricate drive chain	●				
Inspect and lubricate trunnion wheels	●				
Rinse accumulated solids off unit (Clean after a Shutdown)	●				
Inspect spray nozzles and clean, if necessary	●				
Inspect screen for solids build-up and any damage.		●			
Clean interior of equipment.		●			
Check gear reducer oil levels.			●		
Inspect drum cylinder.			●		
Inspect chain, drive, driven and tensioner sprockets.			●		
Inspect trunnion and stabilizer wheels			●		
Check gear reducer output shaft for abnormal play.				●	
Inspect solenoid valve (where applicable).					●
Change oil in gear reducers.					●
Lubricate gear reducer bearings (every 10,000 hours or 20,000 hours for synthetic grease)					●
Thoroughly inspect and clean unit.					●
Clean and re-lubricate chain.					●
Lubricate washwater booster pump (For intermittent use lube every two years)					●

LUBRICATION CHART

APPLICATION	LUBRICATION	CAPACITY
Drum Drive Chain	1. White Lithium Grease with Teflon 2. Hydrotex: #528 Deluxe Special Hi-Speed Chain, Wire Rope and Cable Lube 3. Mobil: DTE25 Hydraulic Oil	As Req'd
Gear Reducer: Model Drum Drive R37 Model Drum Drive R47 Model Drum Drive R77 Model Flock Drive RF37	1. Mobil Oil Corp. - Oil: Mobilgear 600 XP 220 (mineral) -15 to 100°C (replaces 630) 2. Shell Oil Co. - Oil: Omala Oil 220 (mineral) 0 to 40°C 3. Mobil Oil Corp. - Oil: Mobilgear 600 XP 150 (mineral) -15 to 100°C (replaces 629) 4. Mobil Oil Corp. - Oil: Mobil SHC 630 (synthetic) -40 to 40°C	 0.08 gallons 0.18 gallons 0.32 gallons 0.29 gallons
Gear Reducer Bearings	1. Mobil Oil Corp. - Grease: Mobilux EP2 (mineral) -20 to 40°C 2. Shell Oil Co. - Grease: Alvania R3 (mineral) -30 to 60°C 3. Mobil Oil Corp. - Grease: Mobiltemp SHC32 (synth) -45 to 60°C	As Req'd
Ball Bearing Trunnion Wheels	1. Lubriko: T-723-B Grease 2. Hydrotex: MT55 NLGI Grade 2 Grease	As Req'd
Washwater Booster Pump Frame Bearings	1. Chevron Oil Co. - Grease: Chevron SR1	As Req'd

Based on Model, See Figures on pages 5-6A or 5-6B for lubrication points

See Component Data, Section Nine for more product information

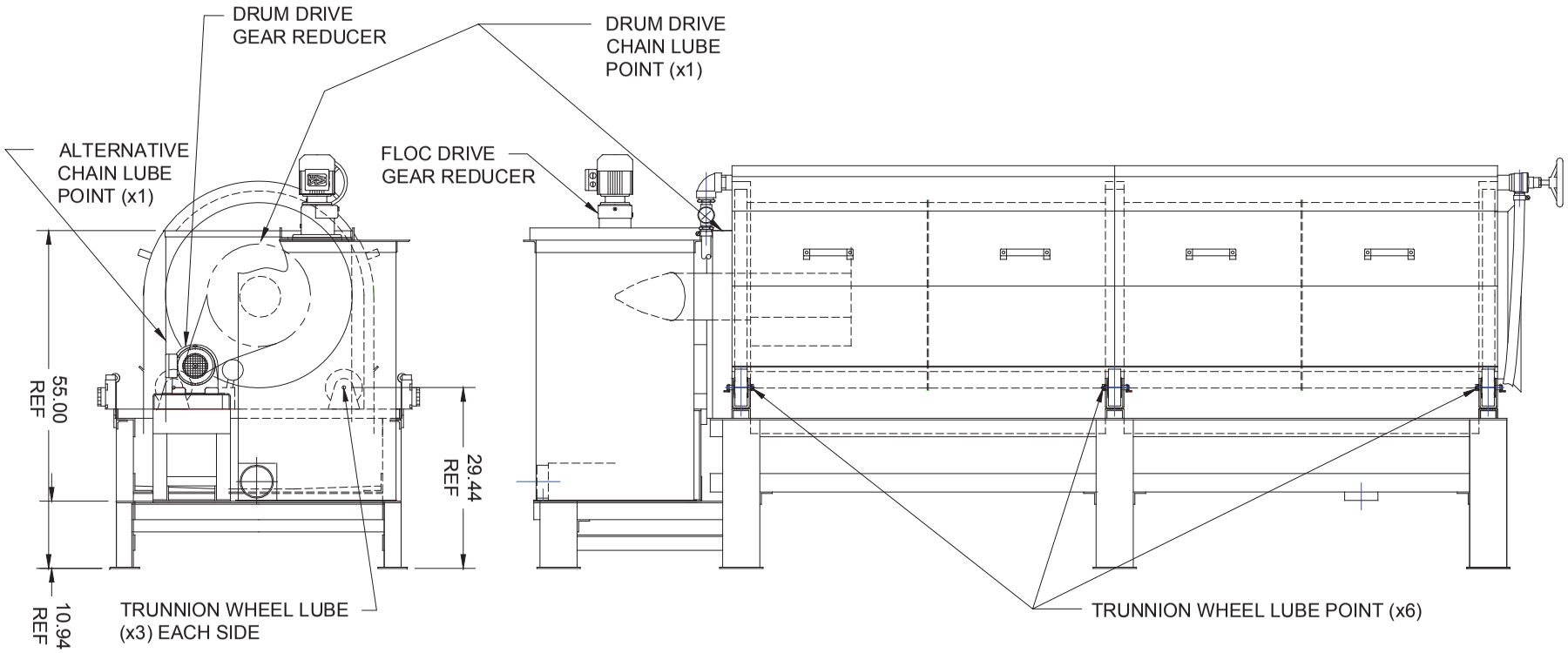

THICKTECH UNIT LUBRICATION
POINTS
RDT50 / 100 / 150

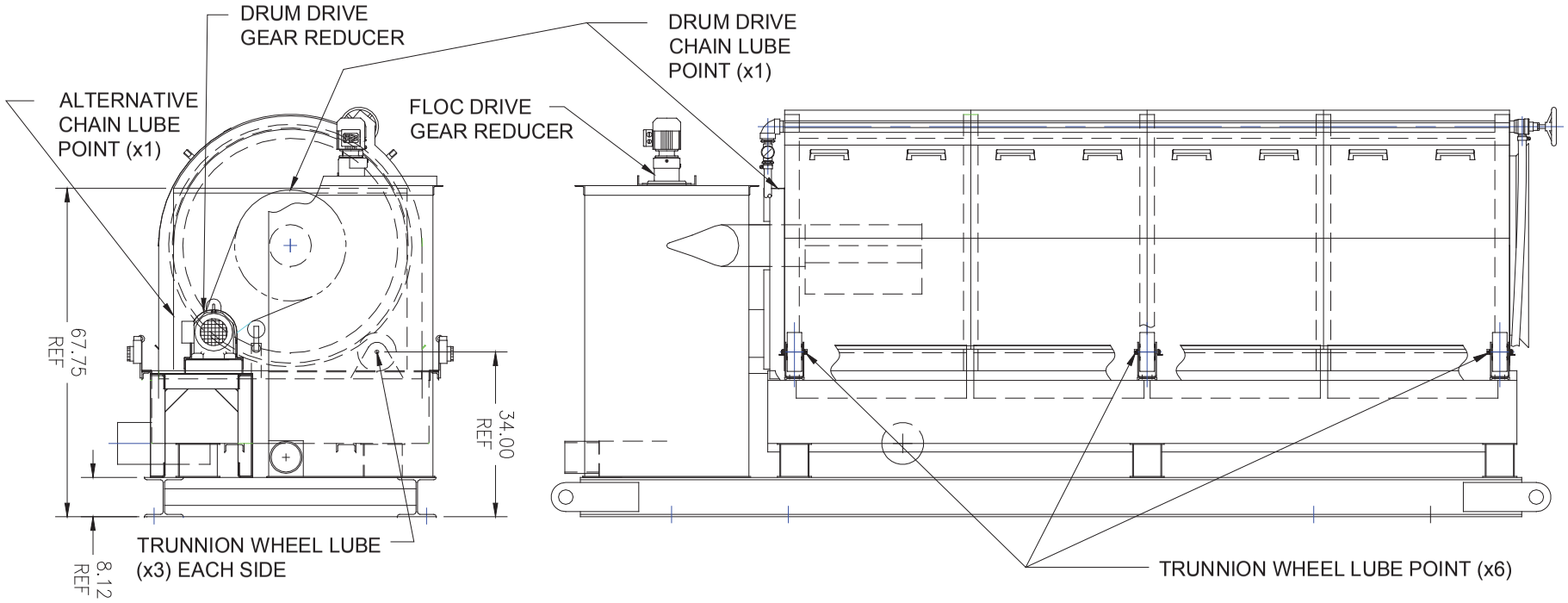

THICKTECH UNIT LUBRICATION POINTS
RDT200 / 300 / 400

562 Bunker Court
Vernon Hills IL 60061-1831

Phone 847.816.3700
Fax 847.816.3707

TECHNICAL SPECIFICATIONS
HYCOR® THICKTECH™ UNIT
ROTARY DRUM THICKENER
RDT200

1.0 GENERAL

1.1 There will be furnished one (1) model RDT200 ThickTech unit, as manufactured by Parkson Corporation, Vernon Hills, IL. The ThickTech unit will consist of: floc development tank, driven impeller, multiple stage rotary drum with filtration media, supporting frame, spray deflection covering, spray wash header, and return water collection tank.

1.2 The sludge mixed with chemicals enters the floc development tank tangentially at the bottom and completes its flocculation. The flocculated solid and liquid flow from a tangential outlet into the rotary drum screen through a step-down header. In the rotary drum screen the liquid separates from the flocculated solids through the woven wire mesh, is collected in the return water tank and exists through a drain in the bottom. The solids pass through four (4) dewatering stages before being discharged from the end of the unit. Mounted above the rotary drum screen is a self-cleaning wash water spray header. This spray header keeps the rotary drum screen openings clear of solids.

1.3 The Hycor ThickTech rotary drum thickener, model RDT200 is guaranteed to achieve the following performance of sludge thickening:

200 GPM Inlet feed rate of digested, waste activated, primary or a blend

5% - 7% solids Thickened consistency

98% Capture efficiency

This guarantee is contingent on both a stable flow rate and consistency of the raw sludge. Instantaneous variations in either will cause performance to deteriorate. The sludge must be characterized as a healthy biomass free of filamentous bacteria. The performance listed above is typical for sludge in the **0.5% - 1.5% solids** range and is subject to confirmation by bench scale or pilot testing. Actual performance may yield higher or lower values depending on the nature of the sludge. Parkson must be an active participant in the selection of the chemical treatment scheme.

Polymer usage is typically 5 – 7 lbs. (100% active)/ton of sludge (dry wt.). Managing the chemical usage is the responsibility of the plant personnel. However, Parkson will: a) provide technical support to assist the customer in identifying the best polymer treatment available, b) recommend application methods to accomplish the most cost-effective performance using the polymers selected, c) provide technical support on a continuing basis, after the RDT has achieved guaranteed performance.

For equipment start-up, a sludge sample must be provided for polymer evaluation a minimum of three weeks prior to the scheduled start-up service. Unscheduled samples will not be accepted. Polymer for start-up and performance testing of equipment to be provided by others.

2.0 CONSTRUCTION AND MATERIALS

All wetted elements of the ThickTech unit will be fabricated from 304 stainless steel, or equally corrosion-resistant material. This includes the floc development tank, input connection, discharge assembly, and driven impeller; the rotary element composed of the input assembly, the multiple stages of the rotary element, the discharge assembly, the filtration media covering the various stages and all fasteners; the supporting frame assembly, the shower deflection covering and all fasteners; the washing header and fasteners; the return water collection tank, pull cord emergency stop switches, and the integrated central electrical control panel. The principal elements of the rotary sludge thickener are to be fully assembled and mounted on a structural steel skid for simplified movement and installation.

2.1 EQUIPMENT SKID BASE The skid base shall be of electric weld construction fabricated of ASTM A36 carbon steel W8 X 35 and C8 X 13.75 structural members. Exterior surfaces shall be dry, cleaned free of dirt, oil, grease, and mill scale and sandblasted to a near white metal finish. One (1) coat of an epoxy primer shall be applied to the sandblasted surfaces, 1.5 mils DFT. Then two (2) coats of a cross-linked epoxy shall be applied for a black semi-gloss finish. Each coat shall be of minimum 2.0 mils DFT.

2.2 FLOC DEVELOPMENT SYSTEM The flocculation tank shall be equipped with a 4-inch NPT half coupling tangential inlet near the bottom and a tangential outlet near the top. The driven impeller of the flocculation system shall be composed of a shaft and a double vertical flat blade on either side of the shaft with a nylon steady bearing centrally located on the bottom of the tank. The discharge flume assembly shall include a step down delivery for the transfer of conditioned sludge to the receiving surface in the first stage of the rotary element. It is recommended that provisions to drain the floc tank be installed in the influent piping.

2.3 THE ROTARY SYSTEM The rotary system shall be composed of multiple stages. Each stage, starting with the input stage, shall function in a distinct progression of the intended dewatering program. Each stage shall be covered with stainless steel woven wire mesh selected on the basis of porosity or percent openness, the opening size and the wire diameter used in the weaving process. Each stage wire mesh may vary with each of the other stages, and wire selections will be made on the basis of maximizing flow consistent with the requirements for high quality filtrate.

The woven wire meshes covering each stage shall be easily changed with simple tools. The woven meshes shall be fastened as the outer covering of each stage and shall be flanged to the outer surface of the perforated metal housing surrounding each stage.

Each stage shall be equipped with roll bars, split augers, ports, closures and/or deflectors to influence shear, water release and drainage rate independent of flow. Delivery of output solids shall be by gravity resulting from a series of detention rings, separating the stages, progressively lower in the direction of delivery and influenced by the split augers.

The cylinder diameter will be 44 inches. The cylinder length will be 120.5 inches.

2.4 DRUM DRIVE Drum drive will be accomplished by the engagement of the drive sprocket with roller chain. The roller chain will be wrapped around the driven sprocket which is mounted on the inlet cylinder head of the rotary drum. The drive assembly will be mounted on a rigid base with provisions for adjustment of the drive, sprocket, and roller chain interface.

2.4.1 The chain and sprockets will be ANSI standard a 50 pitch roller type fabricated of carbon steel with an average tensile strength greater or equal to 6930 lbs.. The sprockets will have their tooth profile hardened to a minimum 39 Rockwell C.

2.5 TRUNNION WHEELS Each screen assembly will be provided with six (6) trunnion wheels and trunnion wheel mounting assemblies. Trunnion wheel assemblies will be accurately mounted to the base frame to provide positive horizontal placement of the rotary drum screen assembly.

2.5.1 The trunnion wheels will be constructed of acetal copolymer with a minimum outside diameter of 8 inches. Flanged ball bearings will be bolted to each side of the trunnion wheel. The bearings will be designed to receive lubrication through the support shaft.

2.5.2 The support shaft will be of type 316 stainless steel having a minimum diameter of 1-3/16 inches. Each shaft will be accurately positioned and secured by the trunnion mounting bracket. The shaft will be designed to provide center lubrication to the bearing and trunnion wheel. Each shaft will be provided with an Alemite grease zerk fitting for ease of lubrication.

2.5.3 The trunnion wheel support bracket will be fabricated of type 304 stainless steel. The bracket assembly will be formed, stiffener reinforced, accurately fabricated and positioned on the drum frame to support the loads imposed by the rotary drum assembly.

2.6 THE WASHING SYSTEM A single self-cleaning washing header shall be oriented in a horizontal position the length of the rotary system to maintain positive cleaning with each revolution of the rotary system, forcing the washed off solids to return to the mass of solids tumbling inside the rotary element. The washing header shall contain spray tips of varying orifice size to emit a progressively reduced flow of high pressure washing water in the direction of the rotary system delivery end. The washing header shall be mounted with U-bolts permitting the adjustment of the angle of impact of the water, from tangential to

square, permitting the restriction of water re-entering the stages to only that quantity required to maintain openness of the filtration woven wire mesh. Spray header to be fitted with an Ashcroft stainless steel pressure gauge, liquid filled type 1008S with a 1/4 inch NPT back connection, 2-1/2 inches dial dual scaled at 0/160 psi and 0/1100 kPa.

2.7 SHOWER DEFLECTION The rotary element shall be covered on the outside with shower deflection panels designed to contain and fugitive spray and minimize mist emissions. The panels shall overlap and shall be fastened to the framing members of the rotary element. The panels shall be limited in dimension to facilitate removal.

2.7.1 SHOWER DEFLECTION PANEL Lift-off panels with a tongue and groove like design are mounted on the sides of the rotary drum thickener to allow easy access to the trunnion wheel grease fittings for regular maintenance and visual inspection from the unit exterior.

2.8 RETURN WATER COLLECTION All elements of the rotary system and supporting frame shall be contained and mounted over the return water or filtrate water collection tank. Delivery of collected filtrate water shall be by gravity through one (1) filtrate tank drain which shall be a 6 inch pipe stub located 63.25 inches from the input end of the unit. Viewing the unit from the discharge end, the pipe stub will discharge either to the left or the right depending on owner preference.

3.0 ELECTRICAL DEVICES AND CONTROLS

3.1 ELECTRICAL DEVICES The following electrical devices will be supplied:

3.1.1 MAIN UNIT DRIVE. Eurodrive 2.0 HP, AC gearmotor rated for severe duty, transmitting power to the sprockets and chain-driven rotary cylinder. The controller shall be a variable frequency drive (VFD) built for 460 Volts/3 Phase/60 Hertz input power.

3.1.2 FLOC TANK DRIVE. Eurodrive 0.5 HP, AC gearmotor rated for severe duty flange mounted to the flocculation tank. The controller shall be a variable frequency drive (VFD) built for 460 Volts/3 Phase/60 Hertz input power.

3.1.3 HIGH PRESSURE BOOSTER PUMP. A wash water booster pump shall be provided and sized according to the specific unit requirement for pressurized wash water. The pump will be driven by a fixed speed, 460 Volts/3 Phase/60 Hertz/3500 RPM direct coupled to a 3.0 HP TEFC motor.

3.2 CONTROLS The following controls will be provided:

3.2.1 A NEMA 4X standard control panel, suitable for wall or stand mounting, fabricated of type 304 stainless steel containing:

1. Main disconnect.
2. Control power selector switch (illuminated on).
3. On/Off push buttons (illuminated green-on).
   - Drum drive.
   - Floc tank agitator drive.
   - Booster pump drive.
4. Emergency stop.
5. VFD Drives.
   - Drum drive with 10:1 speed potentiometer.
   - Floc drive with 10:1 speed potentiometer.
6. Booster pump starter.
7. Spray water solenoid valve contacts. (Solenoid valve by others.)
8. Pull cord emergency stop switch contacts.

Internals, including variable frequency drives, to accommodate 460V, 3 Phase incoming power.

4.0 SPARE PARTS

Unless otherwise specified, no spare parts will be provided.

5.0 ANCHORS

The installing contractor will furnish eight (8) ½”-13UNC by 7 inches long stainless steel expansion anchors.

6.0 FACTORY SERVICE

Equipment manufacturer will provide factory service during one (1) trip, for three (3) days, for inspection of installation, equipment start up and operator training.

7.0 FACTORY ASSEMBLY, TESTING AND INSPECTION

The unit will be factory operated and inspected prior to shipment. The Engineer and/or Owner may, at their option and own expense, witness the factory test.

8.0 INSTALLATION, OPERATION AND MAINTENANCE MANUAL

In addition to the normal Installation, Operation and Maintenance Manuals required by contract, a spare manual will be shipped with the unit in order to allow for proper operation of equipment prior to release of all final Installation, Operation and Maintenance Manuals to the end user.

9.0 OPTIONS

9.1 END ENCLOSURE Each rotary drum thickener shall be provided with an end enclosure to contain discharge sludge mist or spatter. The enclosure shall be fabricated of 14 gauge 304 stainless steel and fitted with doors to allow easy access for thickened sludge inspection and sampling.

The end enclosure is fitted to a chute for directing the thickened sludge to a pump, hopper or process device such as a digester or belt press. The chute provided by the thickener manufacturer will extend downwards to a maximum of the finished floor elevation. Any further extension shall be provided by others.

9.2 ODOR CONTROL CONNECTION A pipe stub or flanged pipe can be added to the end enclosure or the shower deflection panel for connection to an odor control system.

9.3 FLANGED CONNECTIONS Flanged connections are available for the influent connection, filtrate water connection and the optional end enclosure discharge chute connection.

9.4 EQUIPMENT SKID BASE MATERIAL The base frame can be provided in galvanized carbon steel, type 304 or 316 stainless steel, if specified in section 2.1.

9.5 SPARE PARTS The following spare parts will be provided per sludge thickening unit: [Replaces 4.0]

One (1)	set of six (6) trunnion wheels
One (1)	driven sprocket
One (1)	drive sprocket
One (1)	idler sprocket
One (1)	drive chain

9.6 VORTEX MIXING VALVE AND POLYMER INJECTION RING Each rotary drum thickener shall be provided with a sludge conditioning system designed to efficiently mix polymer with the sludge and to adequately condition the sludge for optimum dewatering. The vortex mixing valve, polymer injection ring, and manifold are to be installed by others.

The sludge conditioning system shall be mounted upstream of the thickener and shall consist of an in-line vortex mixer with a variable orifice, polymer injection ring, and polymer solution distribution manifold. The rotary drum thickener manufacturer shall be required to provide to the engineer, a proper layout for the system.

Flocculation time shall be adjustable by the displacement of flanged pipe sections (spools) with the sludge conditioning system at a minimum of three (3) locations in the sludge feed piping. The sludge conditioning system will be installed at one of the three (3) locations. Pipe spools of proper size will occupy the remaining two (2) locations.

The sludge conditioning system shall meet the following mechanical specifications:

Vortex Mixer -
The in-line mixer shall have a flanged housing, an adjustable orifice connected to an externally mounted lever and counterweight and a removable side plate for inspection and cleaning.

The open throat area shall be fully adjustable downward and shall open automatically to prevent clogging.

The position of the counterweight on the externally mounted orifice plate lever shall be fully adjustable, within a 360 degree circle, to allow for adjustment of the mixing energy, regardless of the mounting angle, while the unit is in operation.

Polymer Injection Ring –
The injection ring shall have four (4) injection points evenly distributed along its circumference for injecting polymer into the sludge flow.

Manifold Block -
The manifold distribution block shall divide the single polymer solution feed line into four (4) separate flows for connection to the polymer injection ring.

9.7 SPRAY WATER SOLENOID VALVE The solenoid valve is a 1 inch 2-way, pilot operated, ASCO 8210 series brass body valve with NBR seals and discs, and a Red Hat II 120 VAC watertight NEMA 4X solenoid enclosure. The valve is shipped loose to prevent damage. The contractor must mount valve on the downstream side of the spray water booster pump.

Attachment L: Phoenix Process Equipment

PHOENIX Process Equipment Co.
2402 Watterson Trail
Louisville, KY 40299
Phone: (502) 499-6198, Ext. 159
Fax: (502) 499-1079
Email: mikest@dewater.com
Internet: http://www.dewater.com

BUDGETARY PROPOSAL

PHOENIX Proposal No. 1113167
November 12, 2013

Prepared for: Brown & Caldwell
Attention: John Bratby
Reference: Boulder Betasso Sludge Thickening Project

---

1. Item Covered: One (1) PHOENIX Model TT-1.2 Gravity Belt Thickener w/ auxiliaries

A. Standard Auxiliary Equipment:

- One (1) In-Line Vortex Mixer (304 SS)
- One (1) Discharge Hopper (304 SS)
- One (1) 2 hp VFD (for thickener)
- One (1) Local Control Panel (controls thickener only)
- Standard materials of construction. Carbon steel frame with galvanize / epoxy coating and 304 SS wetted parts

B. Utility Requirements Per Machine:

- Electric: 460v, 3 Phase, 60 Hz
- Air: "Clean and dry", 3 scfm at 100 psig
- Wash Water: 30 gpm at 100 psig
- Control Panel: 460 v, 3 phase.
- Shipping Weight: Approx. 6,600 lbs.

All interconnecting external piping and wiring by others.

---

2. Application Description:

The equipment quoted herein is designed to thicken water treatment sludge based on the following criteria:
Estimated Performance*:

- Hydraulic Capacity: 150 gpm
- Feed Solids Concentration: Specified 0.2 wt %
- Thickened Solids: 3 wt% (estimated)
- Polymer Usage: 20 lb / dry ton (max)

*Polymer will be required for optimum gravity belt thickener performance. As no two thickening applications are exactly alike, performance may vary. PHOENIX offers this application description as a customer guideline only. It is not meant to represent or imply a performance warranty or guarantee. If actual performance is critical, PHOENIX recommends field pilot plant tests to determine anticipated commercial scale application performance. **Note:** In order to achieve desired performance, would prefer to see 0.75 to 1.0 wt% feed solids. A feed solids of 0.2 wt% will make it very difficult to get adequately flocculated material.

3. Pricing: F.O.B. Point of Manufacture…… US $ 96,500.00

Pricing Options (Adders to Above Base Price)

One (1) Air Compressor……	US $ 1,750.00
One (1) Wash Water Boost Pump……	US $ 3,250.00
One (1) Slurry Feed Pump……	US $ 10,000.00
One (1) Single Stage Emulsion Polymer System……	US $ 12,500.00
One (1) PLC Based NEMA 4X SS Master Control Panel…..	US $ 18,750.00

(standard construction and operation)

4. Pricing Notes:

- Shipping and Handling are included. Taxes are not included.
- Price is firm for thirty (30)-day acceptance and 100-day shipment.
- Price is subject to escalation for orders not shipped within 6 months of purchase order date.
- Shipment shall be 12-14 weeks from receipt of order, acceptance and approved drawings. Delivery schedule is subject to change based on shop availability at time of order placement.
- Start-up Service: One (1) trip, three (3) days. Additional service is available from PHOENIX. Per diem rates shall be those prevailing at time of service.
- Terms and Conditions of Sale: PHOENIX's Standard Terms and Conditions of Sale as included in this Proposal.
- Four (4) Operations and Maintenance Manuals will be furnished. Additional copies may be purchased.
- Payment Terms:
  - 95% upon equipment shipment
  - 5% upon startup not to exceed 120 days from shipment.

Accepted by:	PHOENIX Process Equipment Co. 2402 Watterson Trail Louisville, Kentucky 40299
Name	
Print Name	
Title	National Sales Manager
Date	November 12, 2013

PHOENIX Process Equipment Co.
2402 Watterson Trail
Louisville, KY 40299
Phone: (502) 499-6198, Ext. 159
Fax: (502) 499-1079
Email: mikest@dewater.com
Internet: http://www.dewater.com

BUDGETARY PROPOSAL

PHOENIX Proposal No. 1113171
Date: November 12, 2013

Prepared for: Brown & Caldwell
Attention: John Bratby
Reference: Boulder Betasso Sludge Dewatering Project

---

1. Item Covered: One (1) PHOENIX Model LC1200LS Skid-Mounted Belt Filter Press with Auxiliaries

A. Standard Auxiliary Equipment (Included):

- One (1) In-Line Vortex Mixer
- One (1) Air Compressor
- One (1) Boost Pump
- One (1) Polymer System
- One (1) Sludge Pump
- One (1) Control Panel

*Above equipment is mounted, prewired and prepiped on nominal 6-ft x 18-ft skid. Press frame is carbon steel w/ galvanized/epoxy coating. Skid is carbon steel with epoxy coating. Wetted parts on press are 304 SS. Additional equipment, i.e.: conveyors, etc., available - consult PHOENIX

B. Utility Requirements Per Machine:

- Electric: 460 v, 3 Phase, 60 Hz
- Air: "Clean and dry", 3 scfm at 100 psig
- Wash Water: 55 gpm at 100 psig
- Control Panel: 460 v, 3 phase.
- Shipping Weight: 7,900 lbs.

All interconnecting external piping and wiring by others.

---

2. Application Description:

The equipment quoted herein is designed to dewater water treatment sludge based on following criteria:

Typical Performance*:

- Solids Capacity: 300 - 400 lb/hr
- Feed Solids Concentration: 3.0 – 4.0 wt %
- Cake Solids: Approx.14 wt %
- Solids Capture: 95 %
- Polymer Usage: 9 – 10 lb/ton d.s.

*Polymer will be required for optimum belt filter press performance. As no two dewatering applications are exactly alike, performance may vary. PHOENIX offers this application description as a customer guideline only. It is not meant to represent or imply a performance warranty or guarantee. If actual performance is critical, PHOENIX recommends field pilot plant tests to determine anticipated commercial scale application performance.

---

3. Pricing: F.O.B. Point of Manufacture ..... US $ 175,000.00

---

4. Pricing Notes:

- Shipping and Handling are included.
- Price is firm for thirty (30)-day acceptance and 100-day shipment.
- Price is subject to escalation for orders not shipped within 6 months of purchase order date.
- Shipment shall be 12-14 weeks from receipt of order, acceptance and approved drawings. Delivery schedule is subject to change based on shop availability at time of order placement.
- Start-up Service: One (1) trip, three (3) days. Additional service is available from PHOENIX. Per diem rates shall be those prevailing at time of service.
- Terms and Conditions of Sale: PHOENIX's Standard Terms and Conditions of Sale as included in this Proposal.
- Four (4) Operations and Maintenance Manuals will be furnished. Additional copies may be purchased.
- Payment Terms:
  - 95% upon equipment shipment.
  - 5% upon Startup not to exceed 120 days from shipment.

Accepted by:	PHOENIX Process Equipment Co. 2402 Watterson Trail Louisville, Kentucky 40299
Name	
Print Name	
Title	National Sales Manager
Date	November 12, 2013

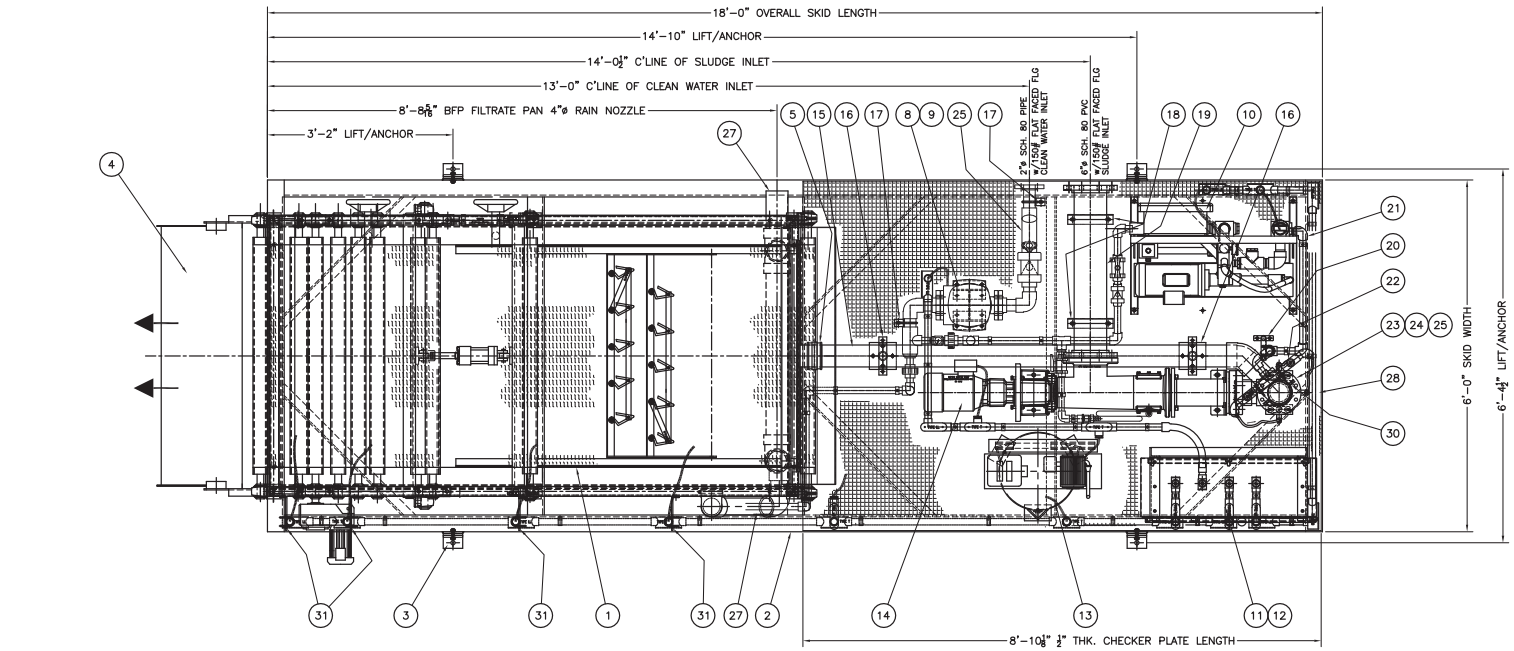

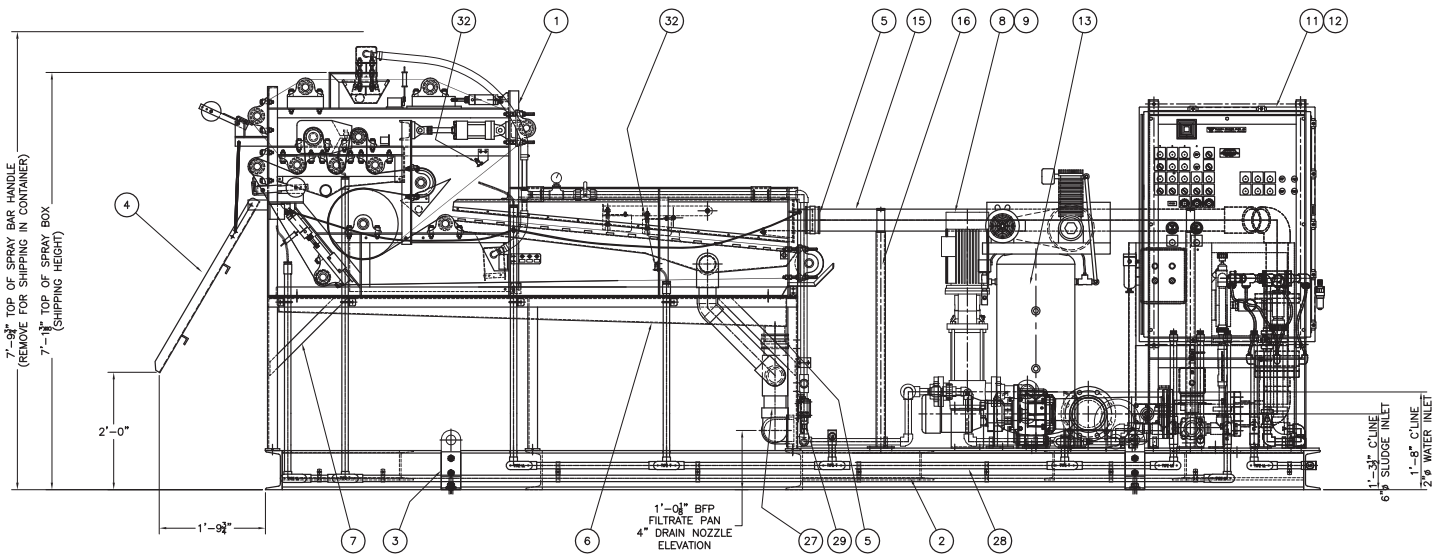

GA LC1200-LS BELT FILTER PRESS SKID SYSTEM

PRESS/SKID SHIPPING WEIGHT: 9,000#

BILL OF MATERIALS

ITEM	QTY.	DESCRIPTION	DWG.#	WEIGHT
1	(1)	LC1200L BELT FILTER PRESS	XXXXX-GA	4,000
2	(1)	6'-0"x18'-0" SKID	XXXXX-SK02	3,200
3	(4)	SKID LIFTING LUG/ANCHOR BOLT ASSY.	XXXXX-SK02	–
4	(1)	LC1200L BELT FILTER PRESS DISCHARGE CHUTE		–
5	(3)	4"øx4"ø FLEXIBLE COUPLING	XXXXX-15	–
6	(1)	LC1200L BELT FILTER PRESS FILTRATE PAN	XXXXX-14	–
7	(1)	LC1200L BELT FILTER PRESS STAND	XXXXX-15	–
8	(1)	WASH WATER BOOST PUMP		–
9	(1)	WASH WATER BOOST PUMP STAND	XXXXX-SK04	11
10	(1)	PROGRESSIVE CAVITY PUMP POLYMER SYSTEM		175
11	(1)	UNIPANEL		600
12	(1)	UNIPANEL STAND	XXXXX-SK05	75
13	(1)	30 GALLON AIR COMPRESSOR		190
14	(1)	SLUDGE INLET PUMP		335
15	(1)	4"ø SLUDGE FEED PIPE	XXXXX-SK06	–
16	(2)	4"ø SLUDGE FEED PIPE SUPPORT	XXXXX-SK04	30
17	(2)	2"ø CLEAN WATER INLET PIPE SUPPORT	XXXXX-SK04	1
18	(2)	6"ø SLUDGE INLET PIPE SUPPORT BRKT.	XXXXX-SK02	9
19	(1)	6"ø 150# FLG. SLUDGE INLET PIPE	XXXXX-SK06	–
20	(1)	1"ø POLYMER PIPING SUPPORT	XXXXX-SK04	5
21	(1)	1"ø POLYMER SYSTEM DISCHARGE PIPING	XXXXX-SK06	–
22	(1)	1"ø POLYMER HEADER PIPING	XXXXX-SK06	–
23	(1)	4"ø VORTEX MIXER		–
24	(1)	4"ø INJECTION RING		–
25	(2)	4"ø MIXER SUPPORT	XXXXX-SK04	8
26	(1)	2"ø CLEAN WATER INLET PIPING	XXXXX-SK06	–
27	(1)	4"ø PRESS DRAIN PAN PIPING	XXXXX-SK06	–
28	(1 LOT)	ELECTRICAL CONDUIT RUN	XXXXX-SK07	–
29	(1)	PRESSURE SWITCH		
30	(1)	POLYMER HEADER BRKT.	XXXXX-SK04	3
31	(4)	CONUIT BRKT.	XXXXX-SK04	3
32	(2)	UPPER AND LOWER BELT BREAK SWITCH		

NOTES

ALL DRAIN PANS, FEED BOX, NUTS, BOLTS & WASHERS ARE T-304 S.S.

ALL PRESS FRAME COMPONENTS ARE C.S. ~ SANDBLASTED TO SSPC-SP-10, 5 MILS MIN. FLAME SPRAYED ZINC & 7 MILS MIN. TNEMEC SERIES 69 HI-BUILD EPOXOLINE II, COLOR: GR29

PRESS STAND C.S.~SANDBLASTED TO SSPC-SP-10, 7 MILS MIN. TNEMEC SERIES 69 HI-BUILD EPOXOLINE II, COLOR: GR29

REMOVE ALL BURRS AND EXPOSED SHARP EDGES AFTER CUTTING OR MACHINING.

ALL INTERCONNECTING EXTERNAL PIPING AND WIRING BY OTHERS.

(1) IT IS RECOMMENDED THAT THE SKID ANCHOR BOLT LOCATIONS BE TRANSFERED FROM SKID IN PLACE, SKID REMOVED, ANCHOR BOLTS INSTALLED, AND SKID PLACED OVER ANCHOR BOLTS AND SECURED.

REV.	DESCRIPTION	BY	DATE
G	REV'D. SKID COMPLETELY TO NEW DESIGN. LAYERED FAB. PACKAGE FOR LC2000L & LC1200L	DT	4/26/18

PHOENIX
PHOENIX PROCESS EQUIPMENT CO.

TITLE LC1200LS (SKID SYSTEM)
GENERAL ARRANGEMENT
FOR

DRAWN	ENGINEER	CHECKED BY/DATE
DT		

SCALE	STYLE CODE	DATE
1"=1'-0"		3/1/02

DWG.NO. LC1200LS REV. G

THIS DWG. CONTAINS PROPRIETARY INFORMATION OF PHOENIX, AND REMAINS THE PROPERTY OF PHOENIX PROCESS EQUIPMENT CO. IT IS LOANED TO THE RECEIVING PARTY AT WILL, NOT TO BE COPIED OR REPRODUCED IN WHOLE OR PART WITHOUT THE WRITTEN APPROVAL OF PHOENIX PROCESS EQUIPMENT CO.

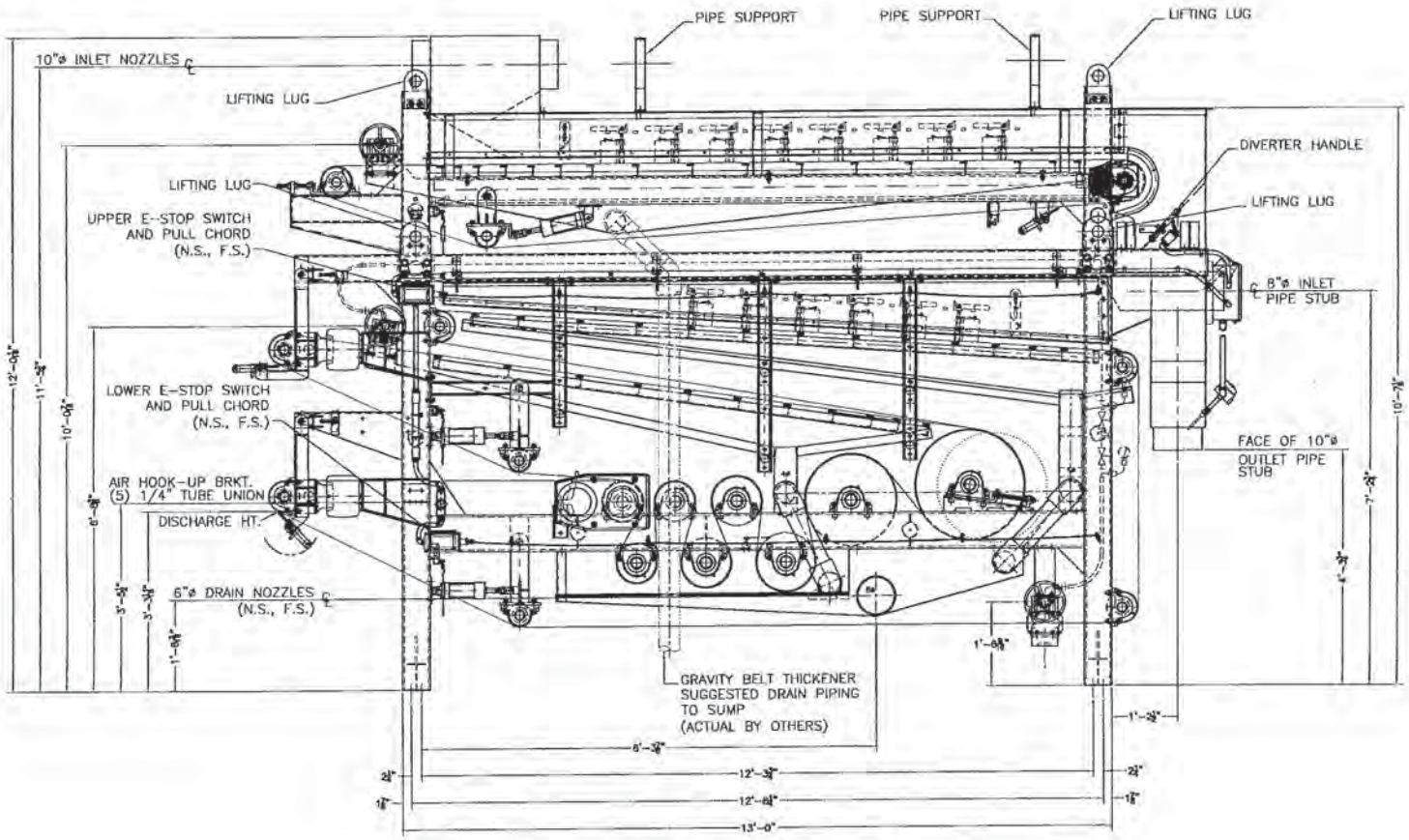

SIDE ELEVATION VIEW

FOR REVIEW ONLY

NOT FOR CONSTRUCTION

DRAWN DT	ENGINEER DT	CHECKED BY/DATE	
SCALE NTS	STYLE CODE	DATE 12/27/11	

PHOENIX

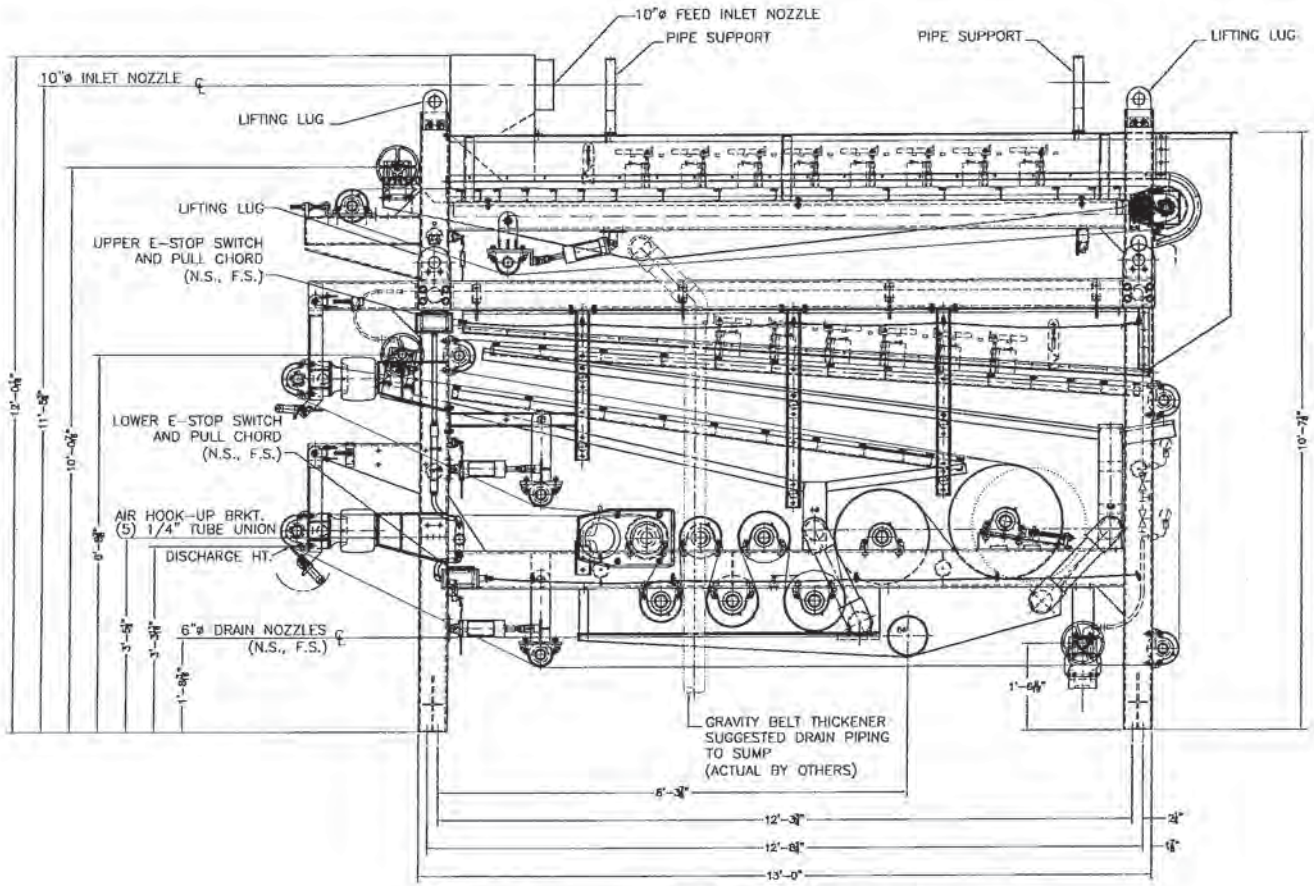

SIDE ELEVATION VIEW

FOR REVIEW ONLY
NOT FOR CONSTRUCTION

DRAWN DT	CHECKED DT	CHECKED BY/DATE	
SCALE NTS	STYLE CODE	DATE 12/27/11	

PHOENIX

PHOENIX PROCESS
EQUIPMENT CO.

THICKENING AND
DEWATERING TECHNOLOGY

PHOENIX

SLUDGE VOLUME REDUCTION

To enhance digester efficiency or to minimize disposal cost, the ***PHOENIX Model TT Gravity Belt Thickener*** efficiently reduces sludge volume by accelerating gravity drainage. The rugged, low profile frame features an advanced corrosion protection system. Automatic belt tensioning and tracking systems provide reliable, consistent performance.

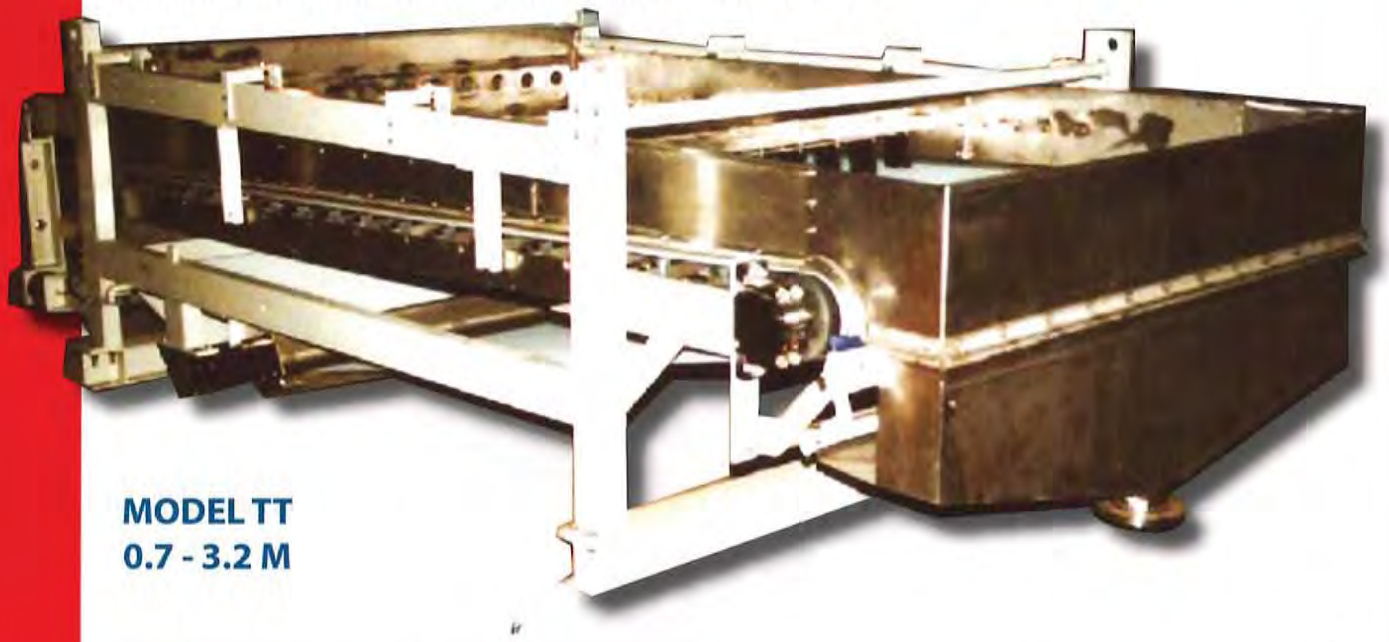

MODEL TT
0.7 - 3.2 M

SLUDGE DEWATERING

The ***Model WX Belt Filter Press*** is available in several configurations. It provides reliable and effective dewatering performance. The open design permits access to all components for ease of operation and maintenance. Robust construction and corrosion resistance, and a wide range of dewatering areas and pressure roll configurations ensure the ideal match for specific applications. The ***Model WX*** is available in either a three belt design with an independently driven gravity zone, or in a conventional two belt arrangement.

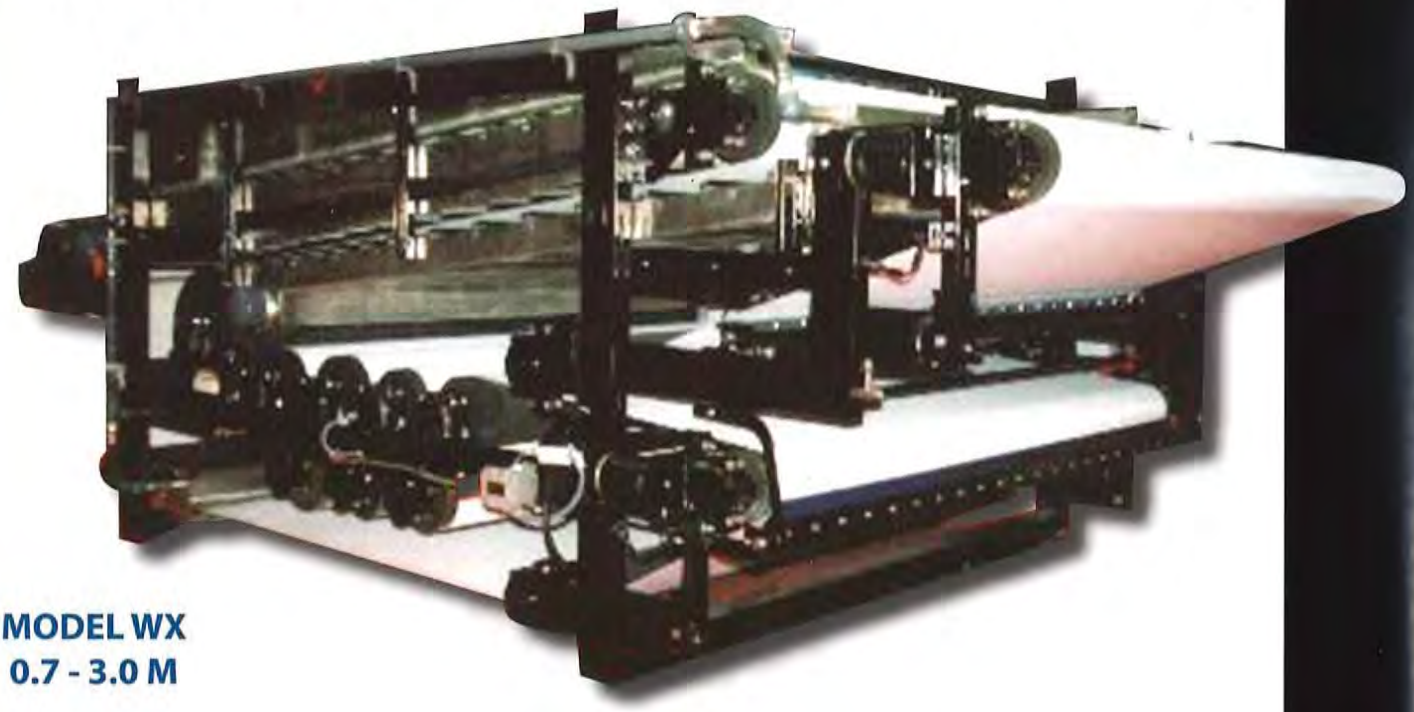

MODEL WX
0.7 - 3.0 M

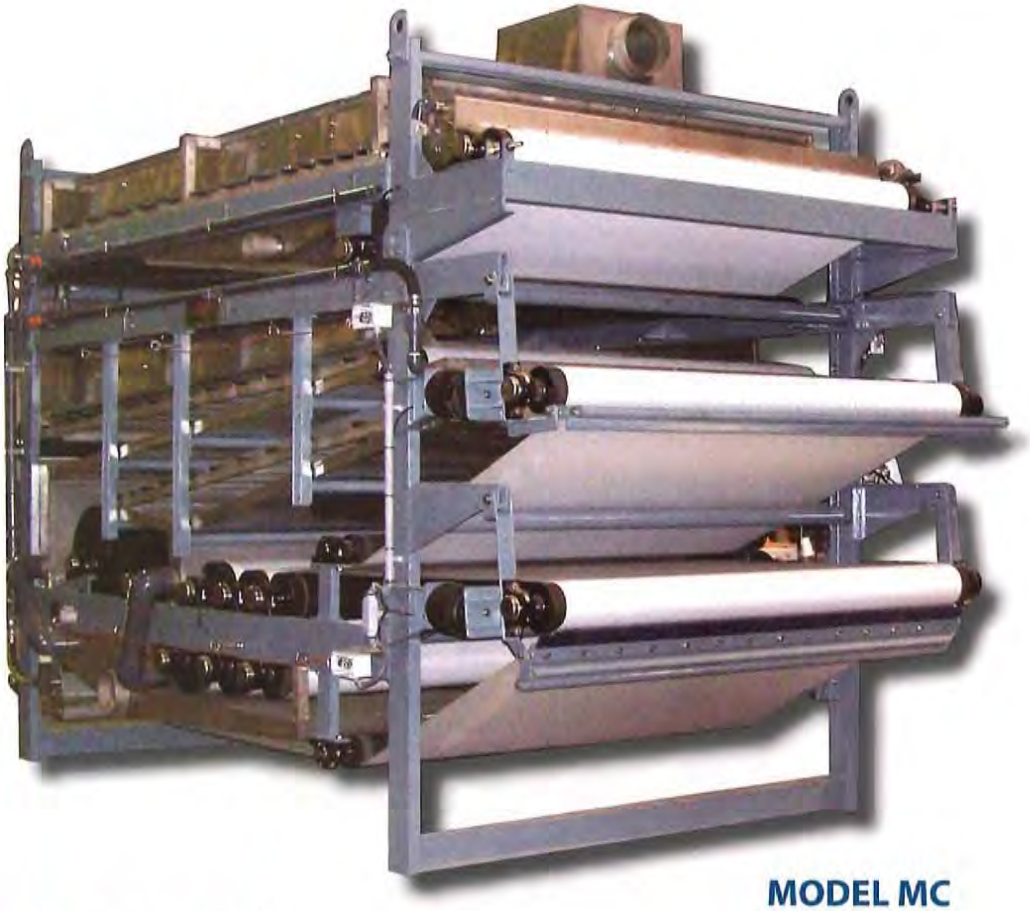

MODEL MC
0.8 - 2.2 M

COMPACT DESIGNS

Producing maximum dewatering capacity while using minimum floor space, the ***PHOENIX Model MC*** features an innovative, versatile, economical design. With a two stage gravity zone utilizing an independent pre-thickener mounted on top of the press, the ***MC*** can successfully process very thin sludges with capacities equal to full size designs while using only half of the plan area. Skid mounted systems as small as 4' x 15' are available.

The ***Model LC***, available with belt widths of 800 mm or 1200 mm, provides a low cost solution for lower flow applications in the range of 15 to 65 gpm. The frame features the same durable corrosion resistant coating as other ***PHOENIX*** belt presses and is available in skid mounted configurations with the pumps, compressor, controls and polymer system all factory installed, piped and wired, thus reducing installation time and cost.

MODEL LC
800 - 1200 MM

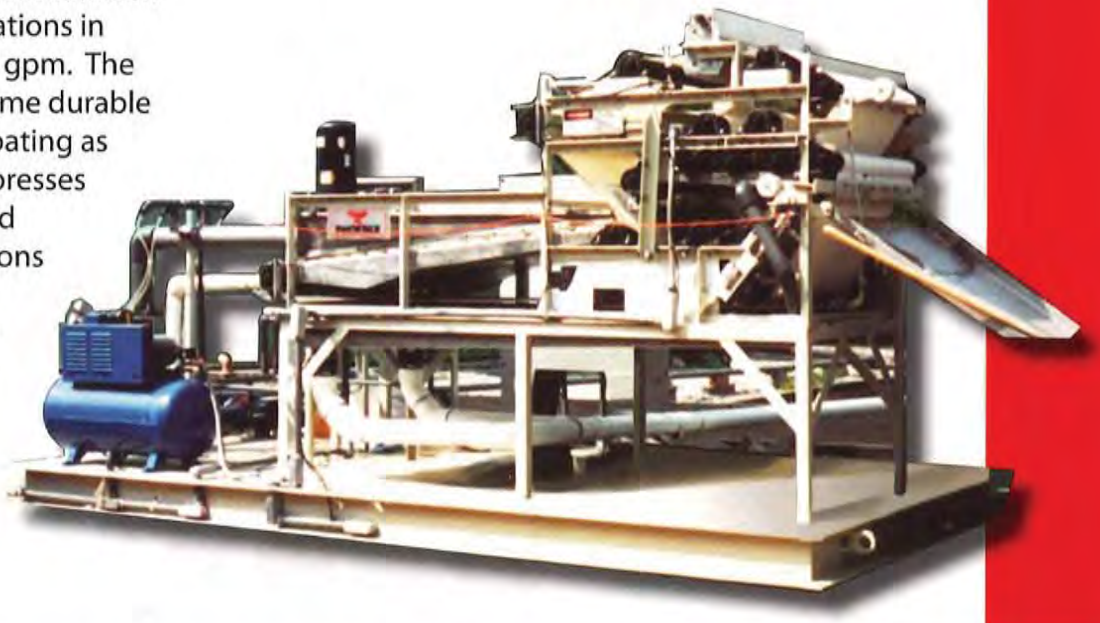

SLUDGE THICKENING/ DEWATERING

For maximum hydraulic flow rates per meter of belt width on very difficult, low feed solids applications the ***Model WX-D*** dual gravity zone system provides maximum versatility. Its integral third belt pre-thickener and extended gravity and wedge zones provide superior dewatering performance. Because the pre-thickener section is driven independently from the press, it utilizes a more porous belt material that accelerates gravity drainage. This allows operation at higher belt speeds, for increased hydraulic capacities and optimum pre-thickening ahead of the belt press gravity zone.

MODEL WX-D
(Dual Gravity Zones)
1.2 - 2.2 M

Alternatively, the pre-thickener belt and the press can process sludges from two different sources, allowing for simultaneous thickening of one sludge and dewatering of the other. In this mode, as controlled by the operator, a diverter directs sludge from the pre-thickener belt discharge to a digester or another point in the process, while a separate nozzle directly feeds the press gravity zone.

PHOENIX Process Equipment Co., headquartered in Louisville, Kentucky, was established in 1984. The success of its dewatering technologies during the 1980s established the foundation that has led the company to become an international leader in liquid/solid separation and residuals thickening and dewatering technologies.

Through internal development and strategic partnering, **PHOENIX** has established a broad base of equipment targeting the industrial, municipal, aggregate, and mining markets. Belt filter presses, gravity belt thickeners, high rate circular thickeners, hydrocyclone/screen separators, fluid bed density separators, jigs, and other water filtration products are included in the water and waste water solutions offered by **PHOENIX** through its world-wide network of sales representatives.

PHOENIX

Rising to Meet the Need

PHOENIX Process Equipment Co.
2402 Watterson Trail • Louisville, KY 40299
(502) 499-6198 • FAX (502) 499-1079
www.dewater.com

PHOENIX PROCESS EQUIPMENT CO.

LABORATORY TEST SUMMARY
Boulder Betasso
Boulder, CO

Log #/Rev#: **13101501**
Page: **1 of 1**
Issued: **October 24, 2013**
Prepared By: **KLT/HRK**

GENERAL

Two (2), 5-gallon samples of water treatment sludge samples, *#5* and *#6*, were received from Boulder Betasso, located in Boulder, CO. The samples were labeled *#5* and *#6*, and given the log number 13101501. The samples are assumed to be representative of the material produced on site.

GOALS

Dewatering tests were conducted to assist in the selection and sizing of PHOENIX's dewatering equipment and water treatment polymers.

CHARACTERISTICS

#5 measured 0.86% solids, by weight (SBW). The volatile solids measured 46.90%. Suspended solids and dissolved solids measured 9,298 mg/L and 599 mg/L, respectively. The pH measured 7.

#6 measured 0.66% solids, by weight (SBW). The volatile solids measured 46.66%. Suspended solids and dissolved solids measured 6,685 mg/L and 220 mg/L, respectively. The pH measured 7.

BELT FILTER PRESS

Belt Filter Press (BFP) simulations were performed on *#6* at the terminal density achieved from using a table thickener to 2.93% SBW. BFP simulations generated a maximum production capacity of 0.64 dry US standard tons per hour per meter (TPH/meter) of belt width. Belt press cake solid at 14.19% SBW was achieved with the addition of an emulsion anionic flocculent at 9.39 lbs/ton. Although the addition of a cationic coagulant was not required during bench-scale simulations, cationic coagulant may be required for full scale processing. The capture rate was estimated to be >90% of suspended solids.

All BFP tests were simulated on a belt press having eight active rollers that provided a high degree of belt wrap. Standard woven belts were used.

CONCLUSIONS

With the use of a WXH-8 Filter Press in a full scale application, we can expect the machine to produce 0.60-0.64 TPH/m of belt width at feed densities of 2.93% SBW. Anticipated cake densities would be in range of 13-14% SBW.

Notice: This is not a performance guarantee. The results as detailed in this report are generated from laboratory simulation of the indicated process equipment. The results based on Phoenix experience are reasonably repeatable in commercial scale. Actual field results may vary and are directly dependent upon the proper installation and operation of the process equipment and support systems. Phoenix accepts no responsibility for the representativeness of this test sample. Phoenix offers commercial scale demonstrations of the subject technology and recommends them to support any required minimum performance levels or process guarantees.

PHOENIX

Phoenix Laboratory Sample Summary

Company	**Name**	Boulder Betasso #5	
	Location	Coulder, CO	
	File I.D.	13101501	
General Characterization:	**Slurry Type/Manager**	Water Treatment / MJS	
	Specific Type/Key Words	Waste Water	
	pH	7	
	Dissolved Solids	599	**mg/L**
	Suspended Solids	9298	**mg/L**
	Ash Content	53.10	**%**
	Volatile Solids	46.90	**%**
	Feed Solids	0.86	**%**
	Solids S.G.	1.00	
	Particle Sizing (Y/N)	**N % Of Solids Passing**	
Equipment Testing:	**Hi Flo Settling? (Y/N)**	**N**	
	AltaFlo Settling? (Y/N)	**N**	
	Belt Filter Press? (Y/N)	**N**	

G:\LAB\Lab Tests and Process Library\2013\Municipal\Boulder Betasso - 13101501\[#5.xlsx]Summary

PHOENIX

Phoenix Laboratory Sample Summary

Company	**Name**	Boulder Betasso #6	
	Location	Coulder, CO	
	File I.D.	13101501	
General Characterization:	**Slurry Type/Manager**	Water Treatment / MJS	
	Specific Type/Key Words	Waste Water	
	pH	7	
	Dissolved Solids	220	**mg/L**
	Suspended Solids	6685	**mg/L**
	Ash Content	53.34	**%**
	Volatile Solids	46.66	**%**
	Feed Solids	0.66	**%**
	Solids S.G.	1.00	
	Particle Sizing (Y/N)	**N % Of Solids Passing**	
Equipment Testing:	**Hi Flo Settling? (Y/N)**	**N**	
	AltaFlo Settling? (Y/N)	**N**	
	Belt Filter Press? (Y/N)	**Y**	
	Feed Solids	2.93	**%**
	Cake Solids	14.19	**%**
	Polymer Dosage(s) Flocculant	9.39	**Avg. lbs/ton**
	Coagulant	0.00	**Avg. lbs/ton**
	Tons/hour/meter	0.64	**TPH/m**
	Gallons/hour/meter	87.85	**GPM/m**
	Estimated Capture Rate	>90%	
	Model(s)	WXH-8	
	PLI	30	
	Belt(s)	7040	

G:\LAB\Lab Tests and Process Library\2013\Municipal\Boulder Betasso - 13101501\[#6.xlsx]Summary

Attachment M: GEA Westfalia Separator, Inc.

Introducing GEA Westfalia Separator **ecoforce.**

Featuring GEA Westfalia Separator ecoforce **water**Master
decanter centrifuges –
Better Technology That Pays for Itself.

So advanced we call it GEA Westfalia Separator **water**Master

The latest generation of centrifugal decanters from GEA Westfalia Separator has evolved from over a century of experience, technological leadership and extensive R&D. We listened to our customers and developed the new GEA Westfalia Separator **eco**force line of decanters – the most flexible, cost-efficient, and robust decanters ever designed. Whether treating drinking water or wastewater, dewatering or thickening high solids sludge, these units achieve the highest separation results.

These innovative machines were designed to handle the growing complexities facing industrial and municipal customers.

Top issues and challenges of today include:

- Increased demands and complexity of treatment
- Stringent and growing government regulations
- Growing energy and operating costs
- Rising solids disposal costs.

Addressing these issues resulted in our most flexible and responsive equipment yet, with higher throughput, consistently drier solids, and significantly reduced operating costs.

Keeping the future predictable

We know that the demands and complexities of water and wastewater treatment can only continue to grow. To that end, the new GEA Westfalia Separator **eco**force line of decanters is built in a modular and expandable manner. This allows for responses to changing technologies and environmental conditions with simple adjustments.

And you can be assured that these rugged machines are designed to perform well into the future. Although they operate under extreme conditions, usually 24/7, we have made sure the construction materials will stand up to the job:

- Corrosion-resistant duplex stainless steel
- All process-wetted parts of stainless steel
- Sintered tungsten carbide tile scroll protection.

We are with you for the long haul

Ease of maintenance and our full range of support services from the original manufacturer also promise a long service life. Customers can select their level of service in order to calculate and control the total expected cost of maintenance and minimize any machine downtime. Customer support services include:

- Technical advice by industry specialists
- Preventive maintenance service agreements
- Minor and major interval inspections, servicing and overhauls performed by factory-trained mechanics
- Condition monitoring and function testing
- Detailed service reports and documentation
- Original manufacturer's spare parts, available 24/7
- Training of operators and maintenance staff
- Repairs at either East or West Coast locations
- Equipment upgrades
- Loaner and rental equipment
- Trade-ins and reconditioned machines.

Offline or online monitoring from GEA Westfalia Separator we**watch**®

GEA Westfalia Separator we**watch**® provides continuous and proactive monitoring and diagnosis of your machines and processes – including bearing condition, resonance, balance, pressure, output, and power consumption – and alerts you to any deviation from the norm. This is the ultimate in risk-avoidance monitoring to prevent operating faults and increase the productivity of your equipment.

Significant energy savings through product innovations

GEA Westfalia Separator **eco**force decanters are designed to reduce energy consumption by up to 50%, improve dewatering efficiencies up to 10%, and increase throughput capacities up to 50%.

These customer benefits are possible due to the many technical developments and design improvements in this new generation of decanters.

- The very deep ponds, created as a result of our advanced scroll designs, means a 10% increase in dewatering efficiency coupled with up to a 50% decrease in power consumption.
- The high bowl speeds (over 4,000 G force operation) have achieved dewatering results up to 10% higher than with lower speed technology, with up to 50% higher throughput capacity.

Greater flexibility and a maintenance-friendly drive system

The patented GEA Westfalia Separator **vari**pond® system allows the decanter to "think for itself" 24/7, responding to changes in the feed conditions.

In the past, it was necessary to stop and modify decanters to achieve a constant discharge concentration. Now, decanters equipped with **vari**pond® (variable pond depth control) can adapt to changing feed conditions at full operating speeds, even with highly fluctuating solids concentrations at the inlet. This results in improved thickening and dewatering and a more uniform total solids concentration at the outlet. In automatic mode, the equipment can even operate itself unmanned at night or on weekends to save on labor costs. The **vari**pond® feature also results in a reduced load on the digester, which leads to improved, more cost-efficient digester operation.

The new 4-stage high-torque GEA Westfalia Separator **summation**drive manages energy consumption and increases the life of the drive.

A large differential speed and control range, and constant torque – independent of the differential speed – are achieved by our new **summation**drive system. The term "summation" refers to the combined energy requirements of the bowl and scroll. Using intelligent kinematics, the two motors precisely deliver only the energy that is required. This eliminates conversion losses due to braking and subsequent recovery. Users can precisely control the torque, even with fluctuating feed conditions, thus ensuring consistent separation with reduced energy consumption.

Powerful yet compact

GEA Westfalia Separator **eco**force decanters are available as stationary or mobile units and, though compact, achieve first-class separation results. The compact design increases user options due to the smaller footprint, and decreases shipping costs because of the reduced weight. This modular design allows for future upgrading. Now municipal and industrial users can precisely tailor their investment to their processing needs through our broad range of sizes. As needed, modular skid units are available as mobile units with plug-and-play design and can be quickly transported from one location to another.

Designed for your specific needs

To protect your investment, we offer a complete laboratory testing center in Northvale, NJ. Here we can test your sludge to determine polymer conditioning requirements and predict feedrates, cake solids dryness and solids recovery. Should it be necessary to perform full-scale testing, we have completely equipped mobile centrifuge systems that come to you for real world testing and demonstrations.

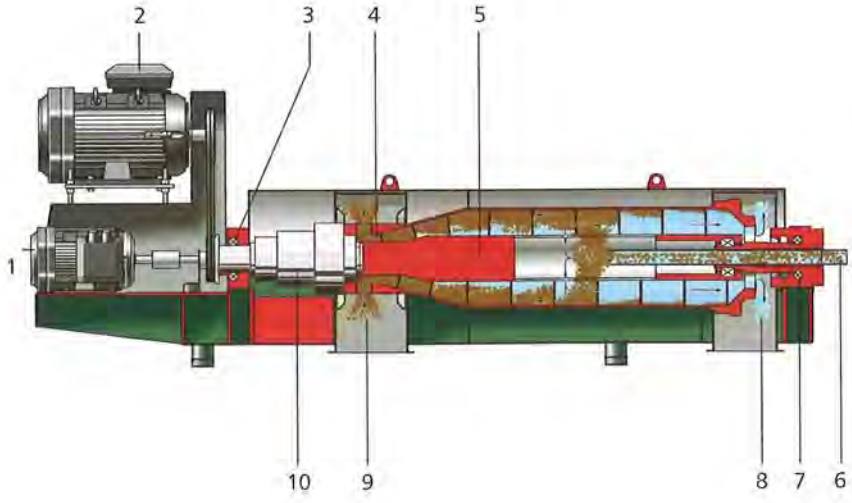

1 Variable speed motor
2 Main motor
3 Bowl bearing
4 Bowl
5 Scroll
6 Feed
7 Bowl bearing
8 Gravity discharge of liquid phase
9 Gravity discharge of solids
10 Gear

Our GEA Westfalia Separator **capital**care service commitment

As an EN ISO 9001 company we stand behind the quality of both our products and our service. Our continuing commitment is to provide customers with the support they need to maximize productivity and minimize downtime. You can count on us for round-the-clock assistance in all service areas.

- **Original manufacturer's spare parts** – We house a large inventory of parts throughout our 6 office network. These are ready to be shipped out with a 24-hour turn-around. Only genuine GEA Westfalia Separator parts are manufactured under the same strict quality control and using the same specifications and materials as our original equipment.

- **Factory-Authorized Repairs** – We offer two full-service repair facilities, one on the West Coast (Patterson, CA) and one on the East Coast (Northvale, NJ). This helps to speed up repair times and keep transportation costs down. Both facilities are factory-certified and are staffed with experienced technicians who have undergone extensive training. If needed, we offer over 100 rental scrolls or bowl assemblies to keep customers up and running while repairs are underway.

- **Field Service** – We have an extensive field service team to perform routine and preventive maintenance and to handle any emergencies that may come up. Located throughout North America, these service technicians are strategically positioned in areas where their industry and process-specific knowledge is most valuable. Our service engineers are on call 24/7.

Excellence Passion Integrity Responsibility GEA-versity

GEA Group is a global mechanical engineering company with multi-billion euro sales and operations in more than 50 countries. Founded in 1881, the company is one of the largest providers of innovative equipment and process technology. GEA Group is listed in the STOXX Europe 600 Index.

GEA Mechanical Equipment US, Inc.

GEA Westfalia Separator Division

Headquarters:
100 Fairway Court
Northvale, NJ 07647
201-767-3900

Midwest:
725 Tollgate Road, Suite B
Elgin, IL 60123
630-503-4700

South:
4725 Lakeland Commerce Parkway, Suite 4
Lakeland, FL 33805
863-603-8900

Southwest:
2408 Timberloch Place, Suite C-4
The Woodlands, TX 77380
281-465-7900

West Coast:
Western Region Customer Support Center
555 Baldwin Road
Patterson, CA 95363
209-895-6300

GEA Mechanical Equipment Canada, Inc.

GEA Westfalia Separator Canada Division

835 Harrington Court
Burlington, ON L7N 3P3
289-288-5500

Toll-Free: 800-722-6622
24-Hour Technical Help: 800-509-9299
www.wsus.com

Westfalia, Westfalia Separator, wowatch and varioond are registered trademarks of GEA Westfalia Separator GmbH
2373

Data Sheet

WaterMaster CF7000
from Westfalia Separator

The WaterMaster 7000 decanter centrifuge by Westfalia Separator is a continuously operating horizontal solid wall bowl centrifuge for maximum dewatering requirements of municipal and industrial wastewater sludge. The frame is of open design with either gravity or pressure discharge of the clarified phase.

Materials
All parts coming into contact with the product are made of duplex stainless steel. All gaskets coming into contact with the product are made of NBR (Perbunan). The machine is painted in a synthetic resin lacquer.

Housing
The housing consists of a welded frame with feet, motor bracket, guards and catcher of 316 stainless steel for the product discharges.

Bowl and scroll
The decanter is equipped with a deep pond bowl with grooves in the cylinder and cone.
The solids discharge is equipped with exchangeable bushes made out of sintered tungsten carbide for protection against wear and tear. The conveyor scroll is of single-pitch design.

Summation Drive
The decanter bowl is driven by a standard 3-phase AC motor designed for controlled torque starting. Power transmission is via V-belts.
The differential speed is controlled by a Summation drive which ensures constant solids drying in case of fluctuating feed concentration and product volumes by means of PLC based control. The differential speed is varied to adapt to the solids loading rate as soon as a preset threshold value is exceeded. The differential speed adjustment necessary to react to a change in the torque depends on the control gradient.

The following adjustments are possible:

a) basic differential speed
b) torque control setting
c) control gradient (differential speed change as a function of the torque)

Torque limits set within the PLC provide gearbox protection.

stage 1: switches off product feed to the decanter
stage 2: shuts down the main motor of the decanter to enable the bowl to empty during deceleration of the bowl.

The main motor and the secondary motor are installed between the feet of the frame to save space.

Vibration dampers between the housing and the foundation frame largely prevent the transmission of vibrations and are included with the standard machine order.

Piping connections
The product supply line is provided with a 4 inch feed flexible connection. A 1 inch polymer feed flexible line is connected at the feed tube.

WaterMaster CF7000
Decanter Centrifuge

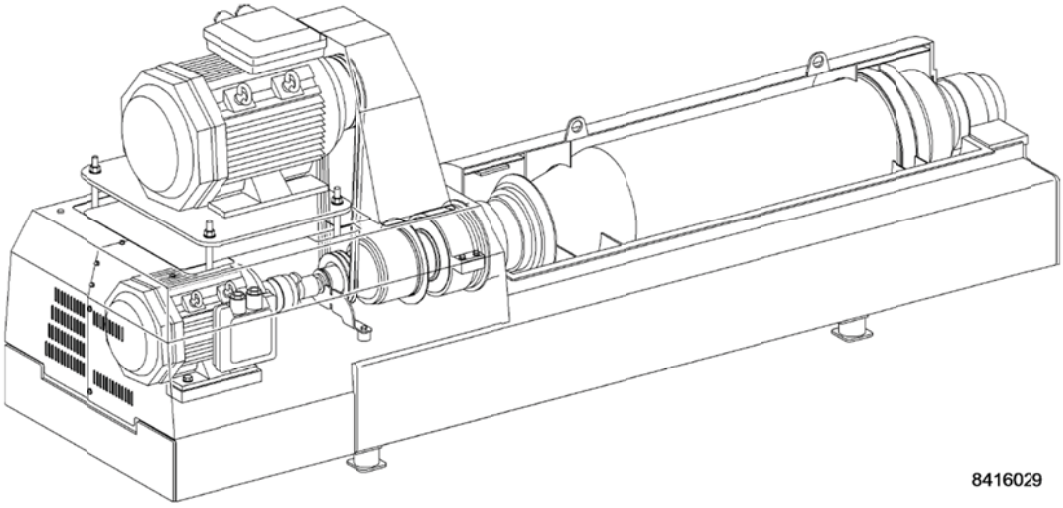

GEA Mechanical Equipment US, Inc. GEA Westfalia Separator Division · 100 Fairway Court, New Jersey 07647 Tel: 201-767-3900 · Toll Free Tel: 1-800-722-6622 · Fax: 201-767-3416 · http://www.wsus.com

technical specifications	WaterMaster CF7000
length	232 inch
width	65 inch
height	96 inch
total weight	20,000 lb
weight of heaviest single part, rotating assembly	8,000 lb
max. speed – bowl	3000 rpm
inner diameter – bowl	25 inch
length / diameter ratio	4
max. g-force	3200 g
max. hydraulic capacity	300 gpm

component	standard	option
bowl and scroll	Duplex stainless steel	----
liquid outlets	Gravity discharge	Vari-Pond or Centripetal Pump
flight hardfacing	tungsten carbide	STC tiles
solids outlet ports	Stainless steel inserts	STC inserts
seals, inner bearings	NBR (Perbunan)	P.T.F.E./Viton
back drive	AC VFD 37 kW motor	AC VFD 45 kW motor
main drive	AC VFD 110 kW motor	AC VFD 132 kw motor
solids discharge	---	Diverter gate
solids chute	316 stainless steel	----
liquid chute	316 stainless steel	----

Technical specifications are subject to changes without notice.

GEA Mechanical Equipment US, Inc. GEA Westfalia Separator Division · 100 Fairway Court, New Jersey 07647 Tel: 201-767-3900 · Toll Free Tel: 1-800-722-6622 · Fax: 201-767-3416 · http://www.wsus.com

Environmental CF4000 Test Unit

The environmental UCF 4000 test trailer is a self-contained sludge dewatering/thickening decanter centrifuge. This 30'0" ISO container has all of the equipment necessary to perform pilot testing at any facility. The test unit comes on its own 41'0" drop-deck, tandem chassis that allows for greater access in tight areas of a plant. All liquid feed and discharge connections are on the passenger-side, rear portion of the container with the solids discharge coming from the rear section of the container. It is preferred to have the passenger side of the trailer as close as possible to where the intended sludge feed will be.

Fig 1 ~ Test container and chassis – driver side

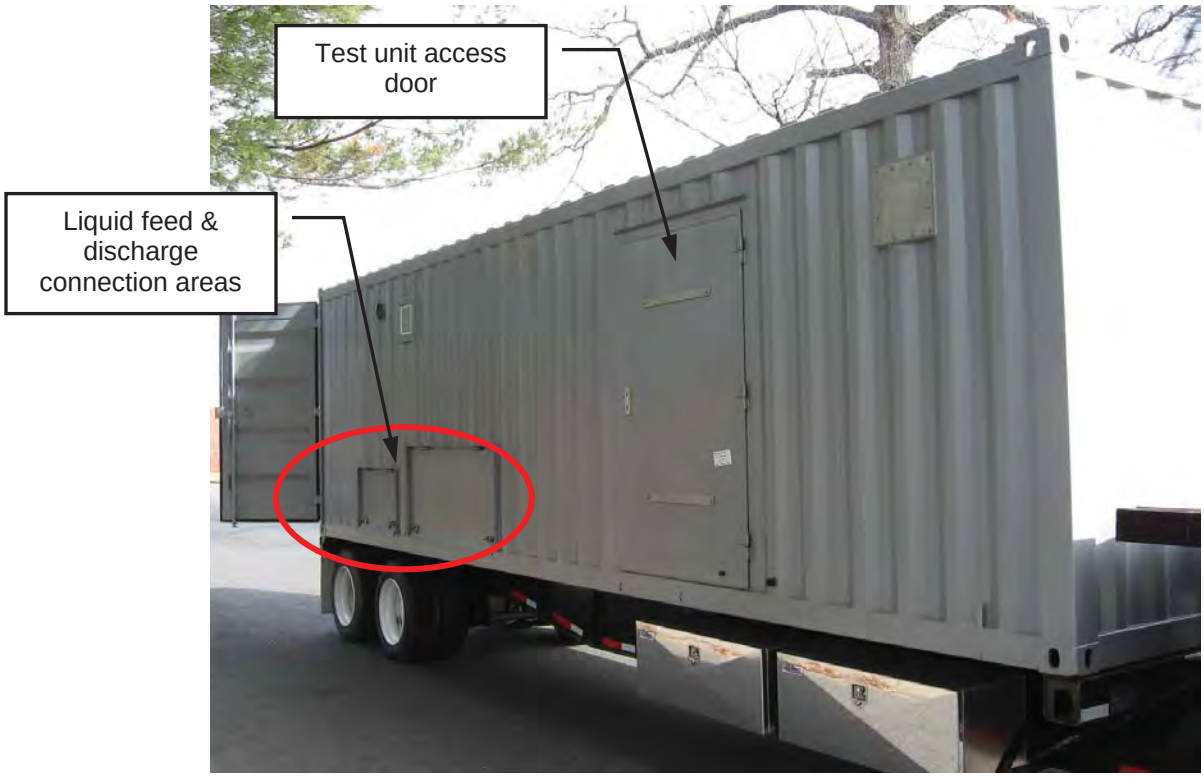

Fig 2 ~ Test container and chassis – passenger side

This test container consists of the following:

- One UCF 4000-00-35 decanter centrifuge
- One Velodyne model VM-5P-1500-D polymer blending system
- One Boerger model PL200 rotary lobe portable sludge feed pump
- One Hach-Lange SOLITAX solids density meter
- One FLOCMASTER polymer conditioning system
- Three discharge screw conveyors
- One control and power panel
- Two rolls of 100 ft of 3” hose with cam-lock ends [for use with sludge pump]
- Three rolls of 50 ft of 2” hose with cam-lock ends
- One, 100 ft 3/0 power cable, 3 wire plus ground, for 480 VAC, 3 phase, 60 Hz, 200 amp service, hardwired to control panel and with pig-tail end connections.
- Three each 6” hard sleeves, 10ft long with cam-lock ends [liquid discharge hose]
- Three each 4” hard sleeves, 10ft long with cam-lock ends [sludge feed hose for use with portable pump]

MINIMUM site requirements are:

- 480 VAC, 60 Hz, 3-phase
- 150 amp service
- 25 GPM @ 22 PSIG water flow for polymer system and decanter flush

The main power cable for the container is secured to the front deck of the trailer. This cable is heavy and can be removed by one person to secure to a land-line connection. Ideally, two people are needed to safely store the cable on the trailer fore deck but it can be done by one person, if needed

Environmental CF4000 Test Unit

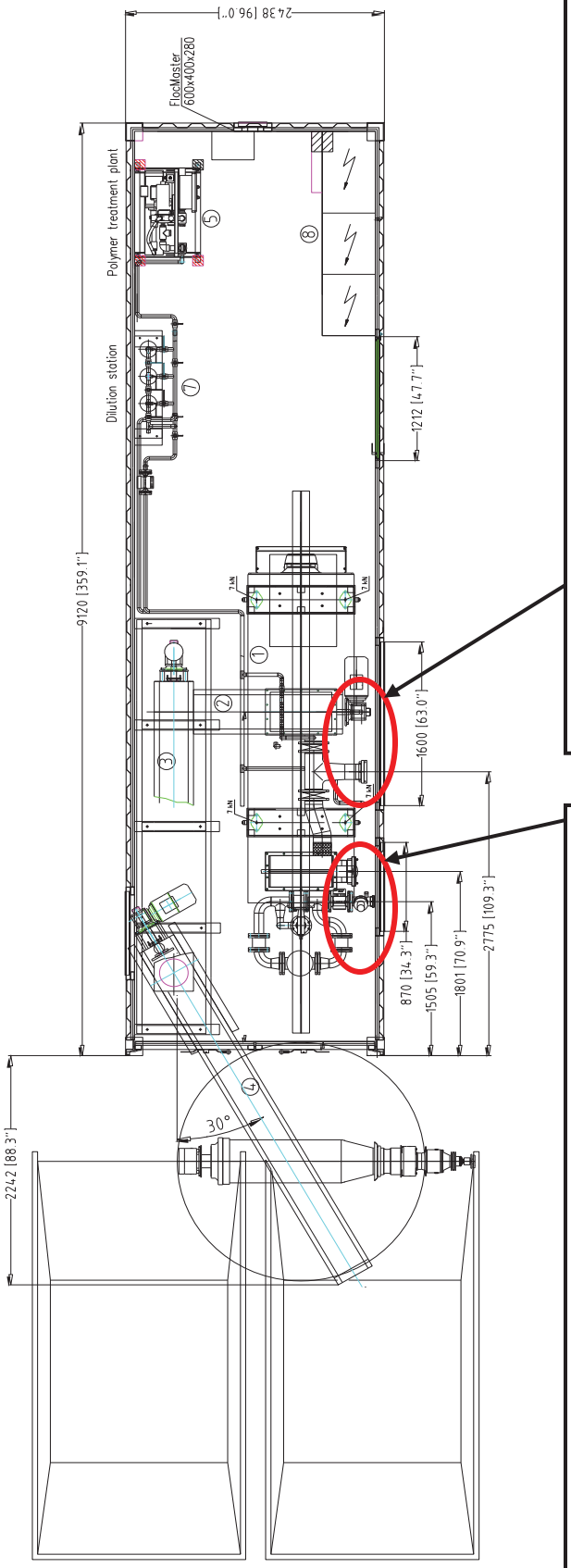

Flush water connection & thickened sludge discharge

Sludge feed & liquid discharge connections

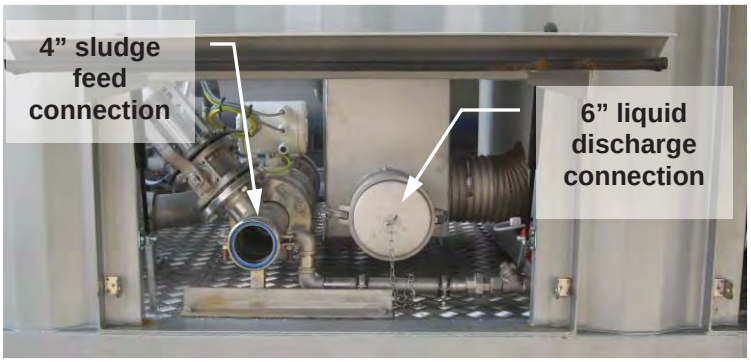

Sludge feed connection [w/ feed sample port] installed

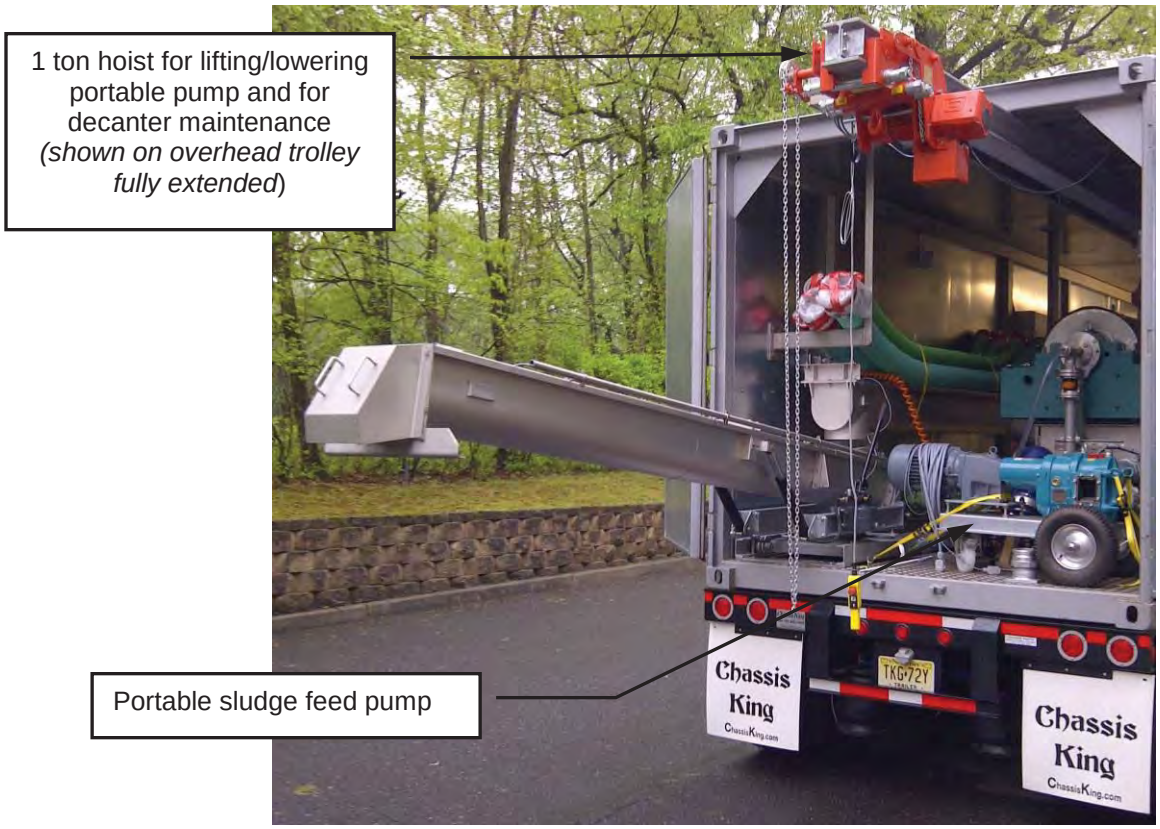

Fig 3 ~ Rear area of container with discharge conveyor extended and partially raised

NOTE → when facing the rear of the container, discharge conveyor can rotate a maximum of 30° to the right so it can discharge into side-by-side containers

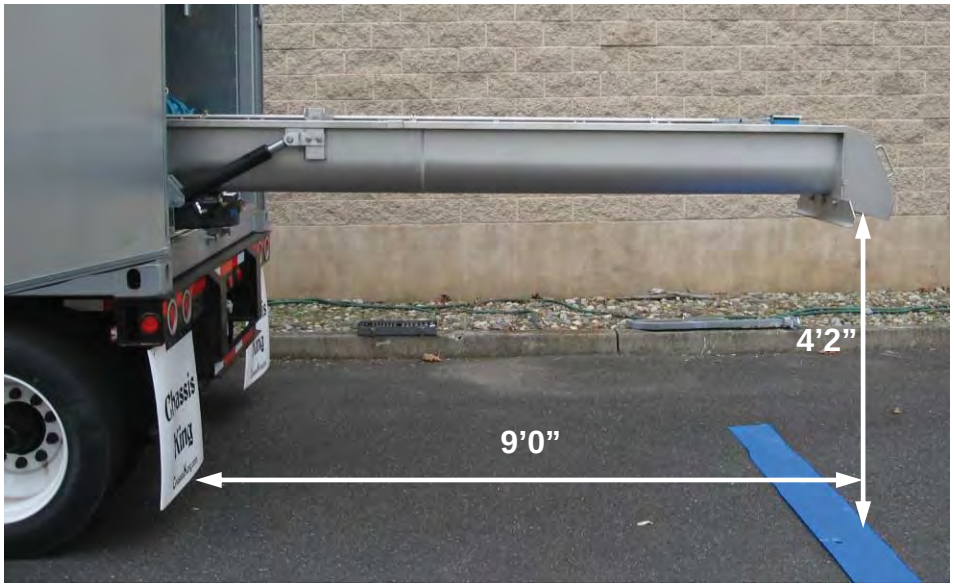

Fig 4 ~ Minimum height and clearance for conveyor #3 discharge

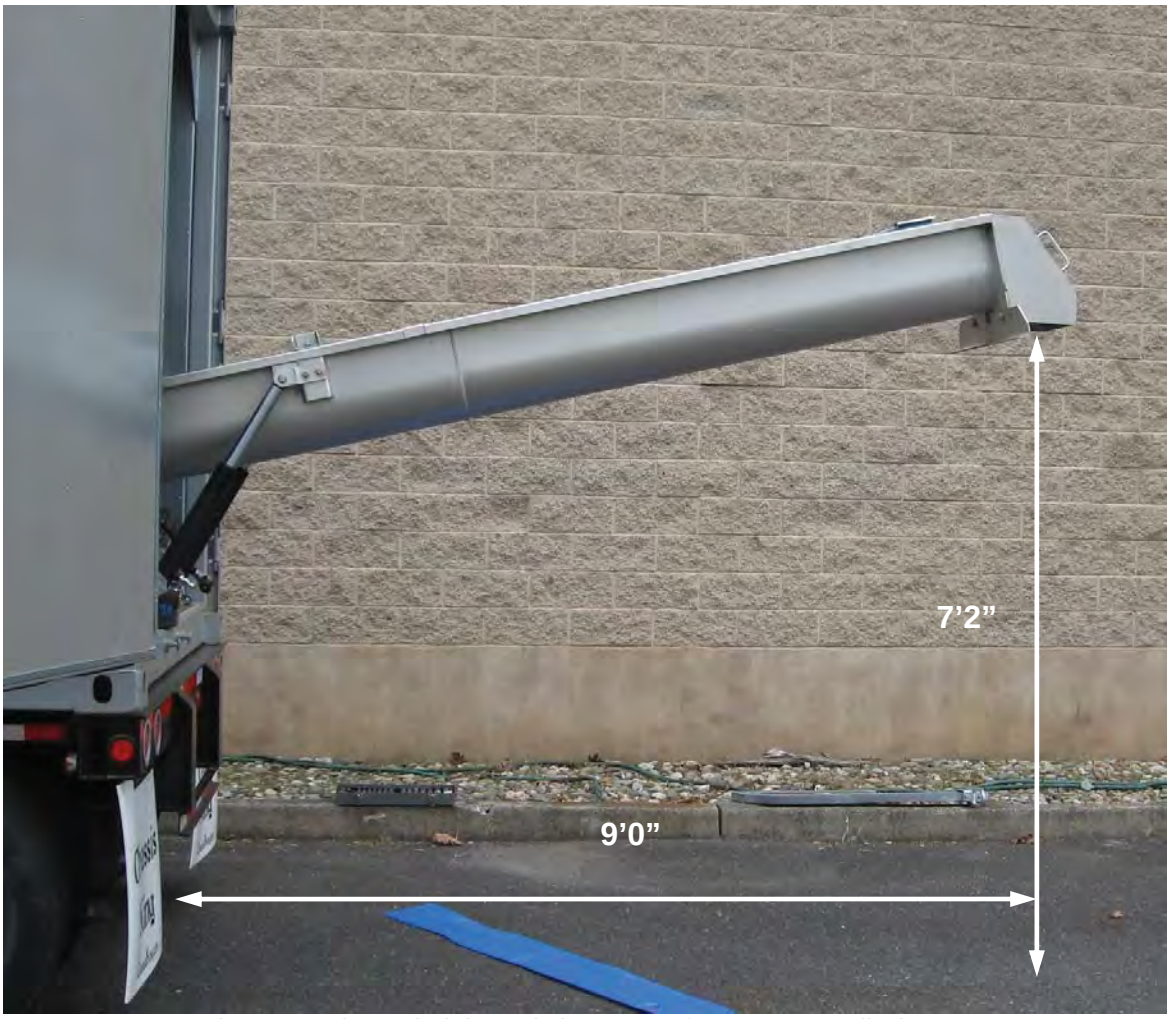

Fig 5 ~ Maximum height and clearance of conveyor #3 discharge

Fig 6 ~ Main power cable for test unit

Attachment N: Westech Engineering, Inc.

WesTech
an employee-owned company

Laboratory Testing Report

Betasso Water Treatment Plant
Boulder, Colorado

Brown and Caldwell
1697 Cole Blvd, #200,
Golden, CO 80401

Phone: (303) 239-5452
Fax: (303) 239-5454

brownandcaldwell.com

Bench Scale Sedimentation & DAF Testing

WesTech Engineering, Inc.
Salt Lake City, Utah

Phone: (801) 265-1000
Fax: (801) 265-1080

Contact: Travis Zurcher
Completed by: Troy Nelson

WesTech Proposal: 1330444
Date: November 14, 2013

Introduction

WesTech Engineering received a sample of sedimentation tank blowdown from Brown and Caldwell for bench-scale laboratory testing. The sample originated from the Betasso Water Treatment Plant operated by the City of Boulder, Colorado.

The principle objective of this study was to evaluate the blowdown's thickening characteristics using gravity sedimentation and dissolved air floatation (DAF).

The sample, shipped in two 5 gallon buckets, consisted of sludge with solids that were easily suspended. Analysis determined the sludge had a pH value of 6.2 and a total suspended solids (TSS) concentration of 0.7 wt%. These values were consistent for the contents of both buckets.

According to documentation supplied with the sample the expected feed concentration is 0.5 wt%. In order to make the sludge sample representative of the expected feed, a discussion with the customer determined that the sample be diluted with tap water to achieve a TSS of 0.5 wt%. All testing was conducted using this diluted 0.5 wt% sludge sample.

Polymer Screening

Polymer screenings were conducted on 100 mL samples treated with a variety of anionic, cationic and nonionic polymers prepared to 1 g/L concentrations. In later testing the polymer solutions were diluted to at least 0.5 g/L.

Hychem brand polymers were used in this evaluation because reliable information regarding charge density and molecular weight of their products is readily available. Varying dosages of each polymer were evaluated in regards to:

- Floc structure
- Settling characteristics
- Floc robustness
- Effluent clarity
- Required flocculation mixing energy
- Mixing time required for floc formation

Screening showed that many polymers effectively flocculated the sample's solids and helped to produce clear supernatants. Hychem Hyperfloc® NF 301 (NF 301) however required a relatively lower dose and offered a slightly faster settling rate. Subsequent sedimentation and DAF tests were conducted using NF 301.

NF 301 is a very high molecular weight non-ionic polyacrylamide flocculant supplied as a granular powder. Similar polymers by other suppliers should work equally well.

Sedimentation Testing

Sedimentations tests were conducted to determine the sludge's ability to thicken via gravity sedimentation.

Sedimentation tests were conducted with 2,000 mL graduated cylinders fitted with a slow turning (6 rev/hr) rake mechanism that served to simulate rake actions found in full scale units and also to minimize the wall effects often seen in narrow cylinders. Proper mixing was ensured by introducing polymer solutions via a tube fitted to an inverted rubber stopper at the delivery end.

The testing procedure was as follows:

1. Transfer 2 liters of sample into a 2,000 mL cylinder and weigh.
2. Add the polymer solution to the sample using a syringe fitted to a tube-stopper. While introducing polymer gently raise and lower the stopper to encourage floc formation.
3. Start timer and insert a rake mechanism.
4. Record interface height and settling time.
5. Collect supernatant sample after 15 minutes and analyze for TSS.
6. When the solids stop compacting, decant the supernatant, weight the underflow and analyze it for solids concentration

Data Interpretation

For any thickening application there are two principle factors that are important for sizing. One is the area required for settling the solids, and the other is the area required to concentrate the solids in the underflow. Two design factors, the Design Rise Rate and the Design Unit Area are used to determine the respective areas. Equipment sizing should be based on the more conservative parameters to ensure that actual process conditions can be accommodated.

Interface Height vs. Settling Time

These curves allow the investigator to note any points that deviate significantly from a smooth curve and to graphically check the initial straight line settling rate. In each case the slope of the initial straight line portion of the settling curve has been noted and reported in terms of gpm/ft^2. These settling rates are "observed" settling rates and are conventionally multiplied by 0.5 to arrive at the maximum design settling or rise rate. Graphs can be found for the respective tests in the Appendix, labeled A.

Unit Area vs. Underflow Concentration

Unit area is the plan area of the thickener required to allow one ton/day of solids to thicken to a particular concentration. The typical curve gradually ramps upward to a nearly vertical line. By designing the thickener to operate near the "vertical" portion of the curve, normal variations in solids rate will have minimum effect on underflow concentration. Graphs can be found for the respective tests in the Appendix, labeled B.

Results

Two sedimentation tests of varying polymer doses were conducted on the sludge sample.

For both tests, approximately 10 seconds of mixing was needed for the polymer to produce large flocs that settled fairly slow and left behind clear supernatants with a slightly brown color. This coloration persisted after filtration suggesting the presence of dissolved solids. Analysis determined the total dissolved solids (TDS) concentration to be 120 mg/L.

Both tests also required 3 hours to achieve a thickened solids concentration of 1.8 wt%. During the first test it was observed that the solids appeared to be over-flocculated, as they tended to pile up in front of the rake's pickets. To determine if over-flocculation was hampering solids compaction, a second test using less polymer was conducted. The solids of this second test did not appear over-flocculated and the results were quite comparable.

The following table provides a summary of testing results.

Table 1: Sedimentation Test Results

Test #		1	2
Feed Slurry Conc.	wt%	0.5	0.5
Polymer Dose	lb/ton	1.7	1.2
Supernatant TSS	mg/L	31	23
Rise Rate:			
Observed Settling Rate	gpm/ft^2	0.5	0.4
Design Rise Rate	gpm/ft^2	0.3	0.2
Feed Rate	gpm	140	140
Overflow Rate	gpm	105	103
Min. Area Required	ft^2	413	553
Unit Area:			
Underflow Conc.	wt%	1.8	1.9
Design Unit Area	$ft^2/stpd$	230	220
Solids Loading	stpd	4	4
Min. Area Required	ft^2	899	924
Thickener Diameter	ft	**34**	**34**

As shown in the above table, Unit Area was the limiting design parameter for both sedimentation tests.

Supernatant produced from sedimentation testing was collected and reserved for DAF testing.

Dissolved Air Flotation Testing

Dissolved air floatation (DAF) is the process of liquid-solid separation using dissolved gasses as the driving force. Two chambers constitute a DAF unit; a pressure chamber and a float cell. Within the pressure chamber, recycled DAF subnatant is air-saturated under high pressure. High pressure allows the water to hold more dissolved gasses (oxygen, nitrogen, CO_2, etc.). The float cell holds the sample being treated.

When released from the pressure chamber, pressurized air-saturated water enters the lower pressure float cell causing the dissolved gasses to effervesce. The solids in the test sample are floated to the surface by the small bubbles, thus separating the sample into a surface layer of "float" and clear liquor or "subnatant".

Bench-Scale DAF Unit
Pressure Chamber - Left
Float Cell - Right

The saturated water, called "recycle", is always added at a specific ratio to the volume of test sample. Float characteristics and effluent quality can often be improved with the use of polymers. NF 301 was added to the blowdown sludge samples.

DAF tests were performed at ambient temperature with 65 psi of saturation pressure. Supernatant collected from sedimentation testing served as the "recycle" for the initial test. Subnatant generated from each DAF test was then used for each subsequent test.

The procedure was as follows:

1. Fill the pressure chamber with supernatant from sedimentation testing or subnatant from the previous DAF test.
2. Connect the air supply, pressurize the chamber to 65 psi and saturate by slightly opening the bleed valve located atop the chamber, allowing air to bubble through the water for 3-5 minutes.

3. Connect the two chambers with a hose.
4. Collect appropriate volume of sludge sample into the float cell.
5. Add the polymer to the sample using a syringe fitted to a tube-stopper, while gently raising and lowering the stopper to promote floc formation.
6. Add the appropriate amount of recycle to the float chamber and begin the stopwatch.
7. Record interface height, draw sample for subnatant TSS measurement, and observe float layer.
8. Once the float layer stops compacting collect a sample and analyze for solids concentration.

Results

Three DAF tests of varying recycle ratios were conducted on the sludge sample. Ratios of 200%, 100% and 75% were evaluated.

The flocculated solids of the 200% and 100% floated easily to the top of the float cell. In the 75% test a portion of the solids settled to the bottom of float cell. This was not deemed acceptable.

In the 200% and 100% recycle ratio tests most of the solids floated to the surface within 1 minute of introducing the recycle. Slower rising solids continued to surface for the next 5 minutes. After 6 minutes each subnatant was free of suspended solids with TSS concentrations of 21 - 26 mg/L

The float layers ranged from 2⅜" – 4" thick and were very stable. When disturbed, the solids did not settle and any dislodged material quickly resurfaced. Analyses showed the float layers to have solids concentrations of 1.6 – 1.9 wt%.

The following table provides a summary of testing results.

Table 2: DAF Testing Results

Test #		1	2
Recycle Ratio	%	200	100
Saturation Pressure	psi	65	65
Polymer Dose	lb/ton	2.7	3.0
Subnatant TSS	mg/L	21	26
Float Thickness	in	2.4	4.0
Hydraulic Loading			
Design Rise Rate	gpm/ft^2	0.8	0.8
Feed Rate	gpm	140	140
Recycle Rate	gpm	280	140
Min. Area Required	ft^2	539	337
Solids Loading			
Float Conc.	wt%	1.9	1.6
Solids Loading Unit	$ft^2/lb/hr$	2.5	2.5
Solids Loading	lb/hr	490	490
Min. Area Required	ft^2	196	196
DAF Diameter	**ft**	**26**	**21**

In both tests (as shown in the table above) Hydraulic Loading was the limiting design parameter. Based on the results of these tests a recycle ratio of 100% is recommended to ensure good DAF performance.

Comparing the sedimentation and DAF test results reveals similar output from both applications, each produced effluents with TSS concentrations of ~28 mg/L and thickened the solids concentrations to ~1.8 wt%. Because DAF accomplishes this in a much shorter time, the minimum required area of a DAF unit is considerably less than that of a thickener.

Conclusions

WesTech Engineering received a sample of Betasso Water Treatment Plant sedimentation tank blowdown from Brown and Caldwell to evaluate its thickening characteristics using gravity sedimentation and dissolved air floatation (DAF). Bench-scale testing was conducted using samples of the blowdown sludge diluted to 0.5 wt% solids.

1. Polymer screening demonstrated that Hychem Hyperfloc® NF 301 (a very high molecular weight non-ionic polyacrylamide flocculant supplied as a granular powder) required a relatively low dose to effectively flocculate and settle the sample's solids at a reasonable rate. Similar polymers by other suppliers should work equally well.

2. Sedimentation testing showed that a 1.2 – 1.7 lb/ton dose of polymer settled and thickened the sludge to a solids concentration of 1.8 - 1.9 wt%. Unit Area was the limiting design factor. Testing yielded the following sizing parameters:

Thickener Parameters		
Feed Slurry Conc.	wt%	0.5
Polymer Dose	lb/ton	1.2
Supernatant TSS	mg/L	23
Unit Area:		
Underflow Conc.	wt%	1.9
Design Unit Area	ft^2/stpd	220
Solids Loading	stpd	4
Min. Area Required	ft^2	924
Thickener Diameter	ft	**34**

3. Dissolved air floatation tests thickened the sludge's solids concentration to 1.6 – 1.9 wt%. A 100% recycle ratio along with a 3.0 lb/ton polymer dose provided efficient floatation and a very stable float blanket. Hydraulic Loading was the limiting design factor. Testing yielded the following sizing parameters:

DAF Parameters		
Recycle Ratio	%	100
Saturation Pressure	psi	65
Polymer Dose	lb/ton	3.0
Subnatant TSS	mg/L	26
Hydraulic Loading		
Design Rise Rate	gpm/ft^2	0.8
Feed Rate	gpm	140
Recycle Rate	gpm	140
Min. Area Required	ft^2	337
DAF Diameter	**ft**	**21**

Note: All results obtained are based on the samples as received. Any changes to the feed characteristics will change the results.

Appendix

Static Thickening Test Data & Calculation Table

Proj. Name:	Boulder Bessato WTP	**Date:**	11/11/13
Ref. #:	1330444	**By:**	TN
Object of Test:	Determine Rise Rate & Unit Area	**Test #:**	1
Slurry Type:	WTP Sedimentation Tank Blow down.		

Polymer:	NF 301	Cylinder Size (mL/ft):	1,460
Conc. (g/L):	1.0	Wt. of Dry Solids (g):	9.3
Vol. Used (mL):	8.0	Init. Volume (mL):	2,000
Diluted Vol. (mL):	20	Init. Conc., Co (mt/m^3):	0.00
Dosage (g/mt):	860.22	Init. Height (meters):	0.42
Dosage (lbs/ton):	1.72	Cylinder Area (cm^2):	47.90
		Wt. Solids/Area (g/cm^2):	0.19
Feed Slurry Measurements:		Depth Corr. Exponent:	0.55
Init. Vol. (mL):	2,000	Solids Specific Gravity:	2.00
Slurry + Tare (g):	2,914.3	Liquor Specific Gravity:	1.00
Cylinder Wt. (g):	930.3	Rake Speed (rev/hr):	6
Slurry Wt. (g):	1,984.0		
Sp.Gr.:	0.99	**Mixing Description:**	
Temp. (C°):	23	Gently mixed for ~10 sec.	
pH:	6.6		
Underflow Measurements:		**Supernatant Description:**	
Settled Vol. (mL):	500	No Solids. Slight brown hue.	
Slurry + Tare (g):	1,429.1	@ 15 min. TSS = 31 mg/L, 12 NTU	
Cylinder Wt. (g):	930.3		
Slurry Wt. (g):	498.8	**Thickened Pulp Description:**	
Dry Solids (g):	9.3	Light solids that easily resuspend.	
Super. Sp.Gr.:	1.00	Pumpable	

Time (min)	Int. Ht. (mL)	UF Conc Wt%	Dsgn. UA ft^2/STPD
0.00	2000	0.46	0.00
2.30	1800	0.52	4.92
3.95	1600	0.58	7.93
5.92	1400	0.66	11.03
7.03	1300	0.71	12.59
8.50	1200	0.77	14.56
15.00	1030	0.90	23.62
20.00	880	1.05	28.89
30.00	800	1.16	41.12
40.00	720	1.28	51.74
60.00	660	1.40	73.98
75.00	630	1.47	90.14
95.00	600	1.54	111.15
110.00	580	1.59	126.33
135.00	540	1.71	149.06
165.00	520	1.77	178.44
180.00	510	1.81	192.60
210.00	500	1.84	222.26
240.00	500	1.84	254.02

Figure 1A
Interface Height vs. Settling Time

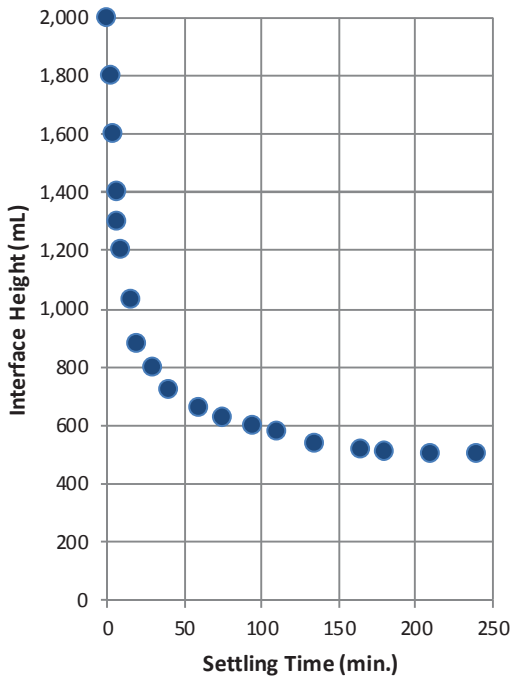

Figure 1B
Unit Area vs. Underflow Conc.

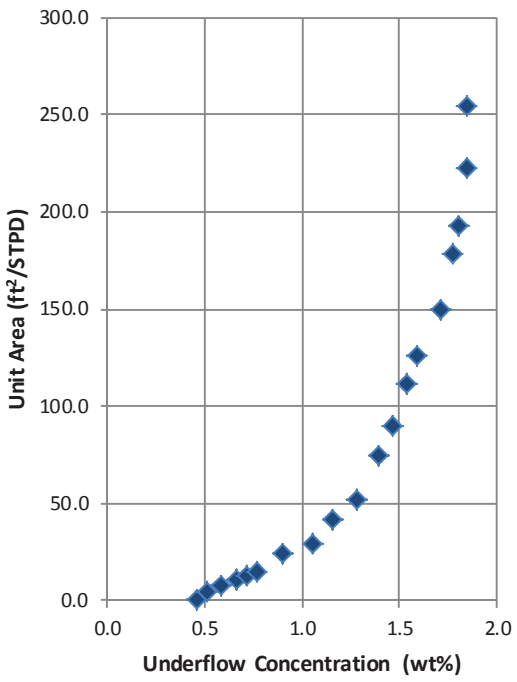

Static Thickening Test Data & Calculation Table

Proj. Name:	Boulder Bessato WTP	**Date:**	11/12/13
Ref. #:	1330444	**By:**	TN
Object of Test:	Determine Rise Rate & Unit Area	**Test #:**	2
Slurry Type:	WTP Sedimentation Tank Blow down.		

Polymer:	NF 301	Cylinder Size (mL/ft):	1,460
Conc. (g/L):	1.0	Wt. of Dry Solids (g):	10.0
Vol. Used (mL):	6.0	Init. Volume (mL):	2,000
Diluted Vol. (mL):	20	Init. Conc., Co (mt/m^3):	0.01
Dosage (g/mt):	600.00	Init. Height (meters):	0.42
Dosage (lbs/ton):	1.20	Cylinder Area (cm^2):	47.90
		Wt. Solids/Area (g/cm^2):	0.21
Feed Slurry Measurements:		Depth Corr. Exponent:	0.55
Init. Vol. (mL):	2,000	Solids Specific Gravity:	2.00
Slurry + Tare (g):	2,917.2	Liquor Specific Gravity:	1.00
Cylinder Wt. (g):	930.3	Rake Speed (rev/hr):	6
Slurry Wt. (g):	1,986.9		
Sp.Gr.:	0.99	**Mixing Description:**	
Temp. (C°):	23	Gently mixed for ~10 sec.	
pH:	6.6		
Underflow Measurements:		**Supernatant Description:**	
Settled Vol. (mL):	530	No Solids. Slight brown hue.	
Slurry + Tare (g):	1,453.3	@ 15 min. TSS = 23 mg/L, 14 NTU	
Cylinder Wt. (g):	930.3		
Slurry Wt. (g):	523.0	**Thickened Pulp Description:**	
Dry Solids (g):	10.0	Light solids that easily resuspend.	
Super. Sp.Gr.:	1.00	Pumpable	

Time (min)	Int. Ht. (mL)	UF Conc Wt%	Dsgn. UA ft^2/STPD
0.00	2000	0.50	0.00
3.00	1800	0.55	5.97
5.58	1600	0.62	10.42
8.15	1400	0.71	14.13
9.58	1300	0.77	15.95
11.00	1200	0.83	17.52
13.25	1100	0.90	20.12
17.17	1000	1.00	24.74
24.00	900	1.10	32.64
30.00	850	1.17	39.54
40.00	800	1.24	50.99
50.00	740	1.34	61.06
60.00	720	1.38	72.17
75.00	680	1.46	87.43
90.00	660	1.50	103.20
105.00	640	1.55	118.38
120.00	620	1.60	132.95
135.00	600	1.65	146.90
150.00	580	1.71	160.20
165.00	570	1.74	174.55
180.00	550	1.80	186.71
195.00	540	1.83	200.24
210.00	530	1.87	213.44
225.00	530	1.87	228.68

Figure 2A
Interface Height vs. Settling Time

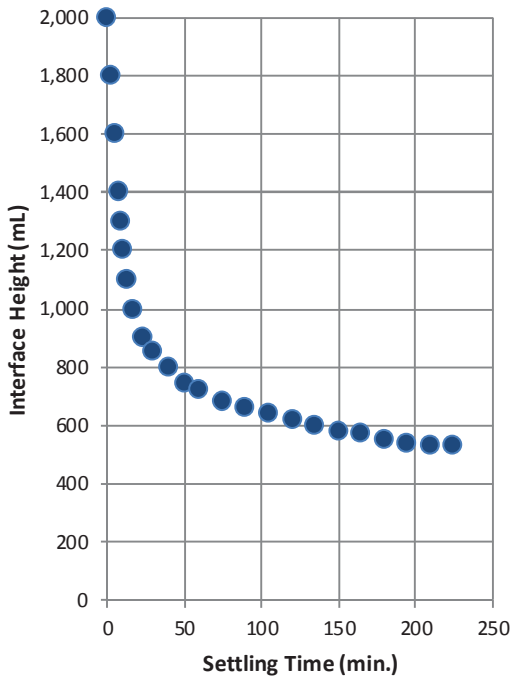

Figure 2B
Unit Area vs. Underflow Conc.

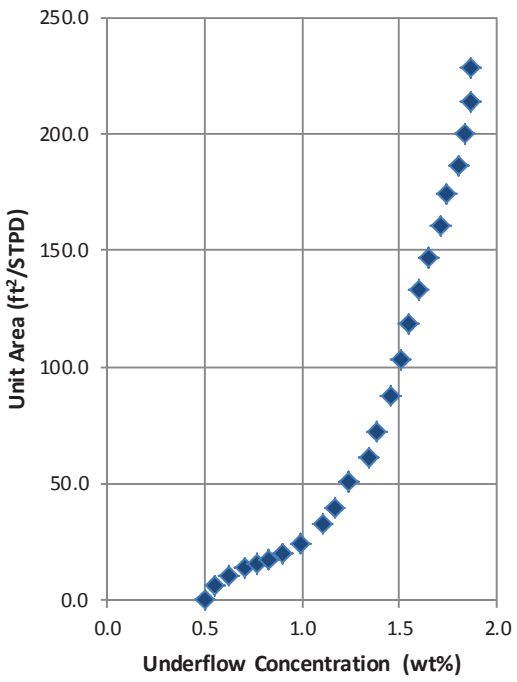

WesTech
an employee-owned company

Proposal For:
Betasso WTP
Boulder, Colorado

Equipment:
DAF Unit
Thickener Mechanism

Engineer:
Brown and Caldwell

Represented By:
Goble Sampson Associates
2460 W. 26th Ave. 30C
Denver, CO 80211
Contact: Josh Queen
Phone: (303) 770-6418
Fax: (303) 770-7549
jqueen@goblesampson.com

Furnished By:
WesTech Engineering, Inc.
Salt Lake City, Utah 84115
Phone: 801.265.1000
Fax: 801.265.1080

WesTech Proposal: 1330444
Tuesday, October 01, 2013

ITEM: "A" - One (1) 13' diameter DAF Unit with Recycle System Suitable For Installation in an Anchor Channel Tank WesTech Model DAFS6N

GENERAL

Each DAF unit is designed for an influent flow rate of 142 gpm. The influent TSS design is for a maximum of 2,000 mg/L. The recycle rate is 68 gpm, resulting in a hydraulic loading rate of rate of 1.9 gpm/ft2 and an air to solids ratio of 0.02 lbs. air/lbs. solids.

DESIGN FEATURES

The system shall be designed to recirculate a portion of the clean effluent through a pressurization system. This pressurization system shall saturate the recycle with pressurized air and then inject the mixed solution into the DAF tank at the influent point of entry. Introduction of the air saturated liquid, influent feed, and the collection of floated solids shall be all accomplished in a single tank.

Recirculation of a percentage of the effluent shall be accomplished by means of a centrifugal recycle pump. The pump shall propel flow into a pressurization vessel (retention tank) where air shall be introduced and the two mixed under pressure to produce an air saturated liquid. The resultant flow shall then pass out of a distribution manifold where it will thoroughly mix with the influent flow. Solids that adhere to the air particles will float and be removed by skimmer assemblies. The float solids will be elevated up a sloped beach surface and dropped into the float box where it will then be removed from the DAF tank.

EACH UNIT FURNISHED COMPLETE WITH THE FOLLOWING COMPONENTS:

- One (1) WesTech standard shaft drive unit, 230/460 VAC, 3 phase, TEFC motor and mechanical variable speed reducer and torque box with adjustable alarm and motor cutout.
- One (1) steel center shaft to drive the skimmer and rake arms.
- Two (2) carbon steel radial rake arms.
- One (1) FRP peripheral effluent V notch weir.
- One (1) peripheral steel float baffle with supporting brackets.
- Six (6) steel float skimmer arms with aluminum skimmer blade assemblies and neoprene wipers.
- One (1) steel influent pipe to extend from tank wall to feedwell.
- One (1) steel feedwell, deflector plate and supports.
- One (1) steel float box with beach area and supports.
- One (1) 2" backpressure control valve Haymore style with horizontal section of pipe.

- One (1) structural steel Access Bridge spanning the tank, with walkway, grating and 1-1/2" double row handrail from one side to center platform.
- One (1) center platform for drive access with grating and 1-1/2" double row handrail.
- One (1) saturation tank, 24" diameter x 36" side shell height, with level controls, sight glass, pressure relief valve and pressure gauge.
- One (1) stainless steel air control panel with air flow control, solenoid valve, Rotameter, check valve, filter regulator and pressure gauge.
- One (1) 10 hp horizontal centrifugal recycle pump, rated for 68 gpm at 175' TDH with 230/460 VAC, 3 phase, TEFC motor.
- One (1) reciprocating air compressor rated for at least 10.4 SCFM.
- One (1) electric control panel for control of proposed equipment.
- One (1) lot 304 stainless steel hardware and fasteners for all supplied equipment.
- Ferrous metal will be blasted with one (1) coat of epoxy primer and one (1) coat of epoxy top coat.
- Field service for two (2) trips and four (4) days.

NOTE: ANY ITEM NOT LISTED ABOVE TO BE FURNISHED BY OTHERS.

Unless otherwise indicated, prices listed below are for equipment only.

These proposal sections have been reviewed for accuracy and approved for issue:
By: *Michael Vanderhooft* Date: October 1, 2013

ITEM: "B" - One (1) 20' Dia. x 12' SWD Thickener Mechanism Model No THS10P

EACH UNIT FURNISHED COMPLETE WITH THE FOLLOWING COMPONENTS:

DRIVE
One (1) WesTech standard shaft drive unit rated for a minimum 9,000 ft.-lbs. continuous torque, with steel housing, forged alloy steel precision main bearing and integral spur gear, Cycloidal or helical speed reducer, and 1/2 HP TEFC motor suitable for 230/460 volt, 3 phase, 60 hertz power.

One (1) WesTech Torkmatic overload control with two (2) adjustable switches for alarm and motor cutout.

SHAFT
One (1) steel pipe center shaft to transmit torque from the drive unit to the rake arms. Shaft will include a steel cone scraper to scrape the sludge sump twice per revolution.

FEEDWELL
One (1) circular steel feedwell, 6' diameter x 3' deep fabricated of 3/16" thick plate. Feedwell will be supported by the walkway.

INFLUENT PIPE
One (1) 6" diameter steel influent pipe will be supplied with minimum 1/4" wall thickness.

RAKE ARMS
Two (2) steel rake arms, blades, pickets and adjustable 304 stainless steel squeegees arranged to scrape the tank bottom twice per revolution.

BRIDGE / WALKWAY / PLATFORM
One (1) mechanism support bridge supported by the tank wall on both ends. Bridge will be designed not to exceed a deflection of 1/360 of the span applying all dead loads and a live load of 50 lbs. per square foot. One (1) 36" wide walkway with handrails will extend from one end of the bridge to the equipment platform. Walkway and equipment platform will be floored with 1-1/4" aluminum I-bar grating with 1-1/2" dia., double row, and 42" high aluminum handrail with 4" high toe plates provided at the base of handrail. The center drive platform will provide a minimum of 24" clearance around the center drive components.

WEIRS
FRP v-notch weirs will be supplied for installation on the peripheral concrete launder.

ANCHOR BOLTS AND FASTENERS
304 stainless steel anchor bolts and 304 stainless steel assembly fasteners will be provided.

SURFACE PREPARATION AND PAINTING

All submerged fabricated steel:
Sandblasted to SSPC-SP10 / NACE 2 near white blast, painted with
(1) Coat of Tnemec N140-1255, 3 to 7 mils DFT, and
Finish coats to be by others

All non-submerged fabricated steel:
Sandblasted to SSPC-SP6 / NACE 3 commercial blast, painted with
(1) Coat of Tnemec N140-1255, 3 to 7 mils DFT, and
Finish coats to be by others

Drive units:
Sandblasted to SSPC-SP6 / NACE 3 commercial blast, painted with
(1) Coat Tnemec N140F-1255 3 to 9 mils DFT, and
(1) Coat Tnemec 1074U-B5712 Dark Blue Aliphatic Acrylic Polyurethane enamel, 2 to 5 mils DFT.

CONTROL PANEL
One (1) Hoffman NEMA 4x (304) stainless steel enclosure. The control panel will be provided with door mounted operators and status lights. One (1) magnetic combination motor starter 1/2 HP, with internally reset thermal overloads, fail safe relays, terminal blocks, timers, repeat cycle timers, fuse and fuse blocks and other supporting hardware is provided. A control power transformer will provide 120VAC for internal controls. The transformer will have both primary legs and one secondary leg fused.

A top mounted red light with horn shall provide indication of a high torque condition. A door mounted reset pushbutton clears all interlocks after the torque conditions have been removed.

The control panel is wired to accept a single 480VAC, 3 phase, 60 Hz power feed from the customer. A 3 pole circuit breaker with pad-lockable disconnect handle is provided for short circuit protection. All wiring for field connections will be brought to a terminal strip.
All interconnecting wiring to be by others

FIELD SERVICE
Total field service to include two (2) trips and three (3) days for installation inspection, startup, instruction of plant personnel, and observation of torque testing.

NOTE: ANY ITEM NOT LISTED ABOVE TO BE FURNISHED BY OTHERS.

ITEMS NOT BY WESTECH: Electrical wiring, conduit, or electrical equipment, piping, valves, or fittings, shimming material, lubricating oil or grease, shop or field painting, field welding, erection, assembly of component handrail, detail shop fabrication drawings, performance testing, bonds, unloading, storage, concrete work, or field service (except as specifically noted).

This proposal section has been reviewed for accuracy and is approved for issue:
By: *Travis Zurcher* Date: October 1, 2013

WESTECH

BUDGET PRICING

ITEM	EQUIPMENT	PRICE (U.S.)
"A"	(1) 13' Dia. DAF Unit with Recycle System Model DAFS6N	$145,000
"B"	(1) 20' Dia. X 12' SWD Thickener Mechanism Model THS10P	$110,000

The above mentioned equipment was designed according to the information which we received. The dimensions may vary slightly depending on the plant's actual design parameters. Assumed values may have been used, therefore, all information shall be verified by the Engineer.

Unless otherwise indicated, prices listed are for equipment only. All optional items will be offered with the purchase of the scoped equipment only. No optional items will be sold separately.

Prices are for a period not to exceed 30 days from date of proposal.

Warranty: A written supplier's warranty will be provided for the equipment specified in this section. The warranty will be for a minimum period of (1) year from start-up or 18 months from time of equipment shipment, whichever comes first. Such warranty will cover all defects or failures of materials or workmanship which occurs as the result of normal operation and service except for normal wear parts (i.e. squeegees, skimmer wipers, etc.).

Terms: Terms are net **30 days** from shipment with no retentions allowed.

Sales Tax: No sales taxes, use taxes, or duties have been included in our pricing.

Freight: Prices quoted are **F.O.B. shipping point** with freight allowed to a readily accessible location nearest to jobsite. All claims for damage or loss in shipment shall be initiated by purchaser.

Submittals: Submittals will be made approximately **6 to 8 weeks** after purchase order is received in our office.

Shipment: Estimated shipment time is **18 to 20 weeks** after approved submittal drawings are received in our office.

Field Service: Prices do not include field service unless noted in equipment description. Additional field service is available at $960.00 per day plus expenses.

Paint: If your equipment has paint included in the price, please take note of the following. Primer paints are designed to provide only a minimal protection from the time of application (usually for a period not to exceed 30 days). Therefore, it is imperative that the finish coat be applied within 30 days of shipment on all shop primed surfaces. Without the protection of the final coatings, primer degradation may occur after this period, which in turn may require renewed surface preparation and coating. If it is impractical or impossible to coat primed surfaces within the suggested time frame, WesTech strongly recommends the supply of bare metal, with surface preparation and coating performed in the field. All field surface preparation, field paint, touch-up and repair to shop painted surfaces are not by WesTech.

Municipal Sedimentation Experts

ISO 9001 CERTIFIED
WesTech
Quality System

WesTech
Process Equipment. Process Driven.

More Options for Clarification

You may know that WesTech is recognized as the industry leader in spiral blade clarification, but did you know that WesTech offers other leading municipal sedimentation solutions too? Our extensive line of clarification equipment for water and wastewater treatment combines superior design with quality mechanical and operational features.

Wastewater Clarification

- **COP™ Clarifier**
- **Suction Header**
- **Suction Pipe**
- **Conventional Rake Blades**
- **Solids CONTACT CLARIFIER™**

Water Clarification

- **Solids CONTACT CLARIFIER™**
- **SuperSettler™**

Backwash Water Treatment

- **SuperSettler™**
- **Decant Clarifiers**

Flocculation

- **Flocculating Clarifiers**

Thickening

- **Wastewater Thickeners**
- **Water Thickeners**

Premium Drive Units

Customization. Process Experts.

WesTech offers multiple options for sedimentation systems to complete your plant design or improve the performance of your existing operation. Our process experts work closely with you to gather the necessary information about your entire process to customize a system that will meet your requirements. Effective skimming designs, positive scum removal systems, and other accessories are also available to ensure the best possible performance. From design concept to start-up, WesTech delivers quality equipment to meet your sedimentation needs.

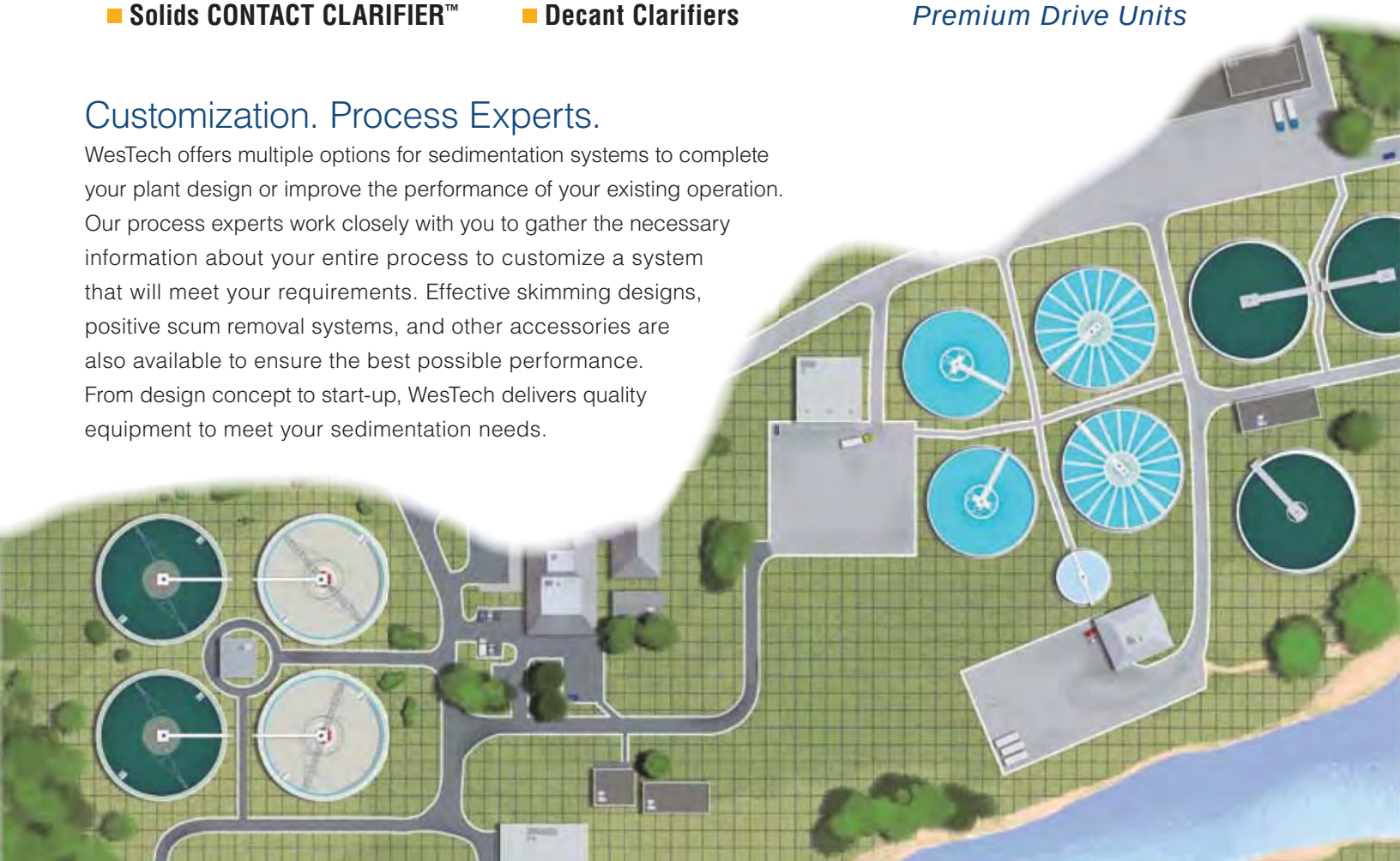

True Solids CONTACT CLARIFIER™

Water Clarification

The solids CONTACT CLARIFIER™ combines multiple processes into a single basin. For surface waters, enhanced flocculation is combined with clarification. For cold lime softening, precipitation and settling are combined. The advantages include a smaller footprint and improved settled water quality. For either application, the solids CONTACT CLARIFIER™ is both highly efficient and effective for water clarification.

Centrifugal Impeller

The heart of a true solids CONTACT CLARIFIER™ is WesTech's high efficiency, high volume, low head, low shear pump which lifts concentrated settled solids to mix with the inlet flow and disperses the mixture into the upper solids contact zone. WesTech's recirculation impeller has the lowest horsepower draw and less shear than any other impeller on the market.

- **High Efficiency**
- **Low Speed**
- **High Volume**
- **Low Shear**

Retrofitting Existing Equipment

WesTech has experience in retrofitting and upgrading all other manufacturers' equipment. Upgrades can range from only a single drive unit to a complete replacement of your existing equipment.

Additional Applications

- **Phosphorus Removal**
- **Hardness Removal**
- **Iron and Manganese Removal**
- **Powdered Activated Carbon Applications**
- **Pre-treatment For Membranes**

COP™ Clarifier Optimization Package

Primary and Secondary Clarification

WesTech is a leader in providing proven clarification solutions for wastewater treatment. WesTech's COP™ Clarifier Optimization Package transformed the industry standards in clarifier design for clean effluent, maximum overflow rates, and optimal underflow concentration.

Learn how the COP™ Clarifier can optimize your primary and secondary clarification needs in our COP™ Clarifier Optimization Package brochure.

- **Highest Quality Clarifier Available**
- **Easy Installation**
- **Rapid Removal of Settled Solids**
- **Lowest Possible Maintenance**

Multiple EDI Options

WesTech offers conventional, adjustable, Dual-Gate™, and other Energy Dissipating Inlet well (EDI) options to promote well-flocculated solids in your clarifier. For example, the Dual-Gate™ adjustable EDI gives you the flexibility to configure your EDI for counter flow, tangential flow, or variable flow conditions to your clarifier.

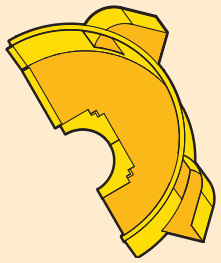

Conventional or Scoop

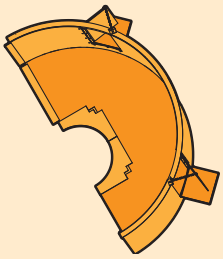

Adjustable Gate

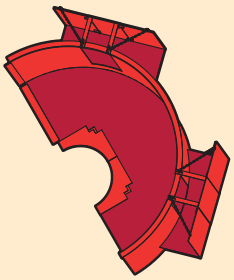

Adjustable Dual-Gate™

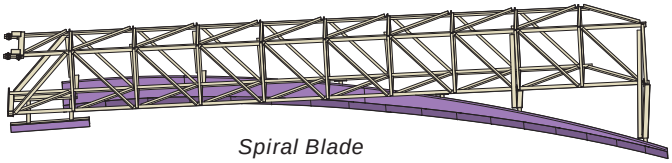

Spiral Blade

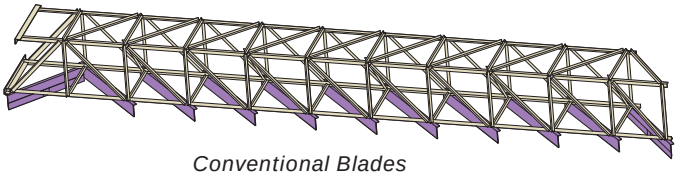

Conventional Blades

Spiral and Conventional Blades

Spiral rake blades move solids more than four times faster than conventional rake blades. Conventional rake blades remain a viable option for smaller primary clarifier applications.

Sludge Withdrawal Ring

For secondary clarification, the sludge withdrawal ring will reduce high sludge blankets and provide a more consistent underflow concentration to your process and digestion equipment. This system creates a more stable overall process.

Suction Header Option

WesTech suction headers provide full radius, rapid sludge removal plus the added advantages of the COP™ Clarifier Optimization Package. Our suction header clarifiers provide high quality effluent with full floor sludge removal in every rotation.

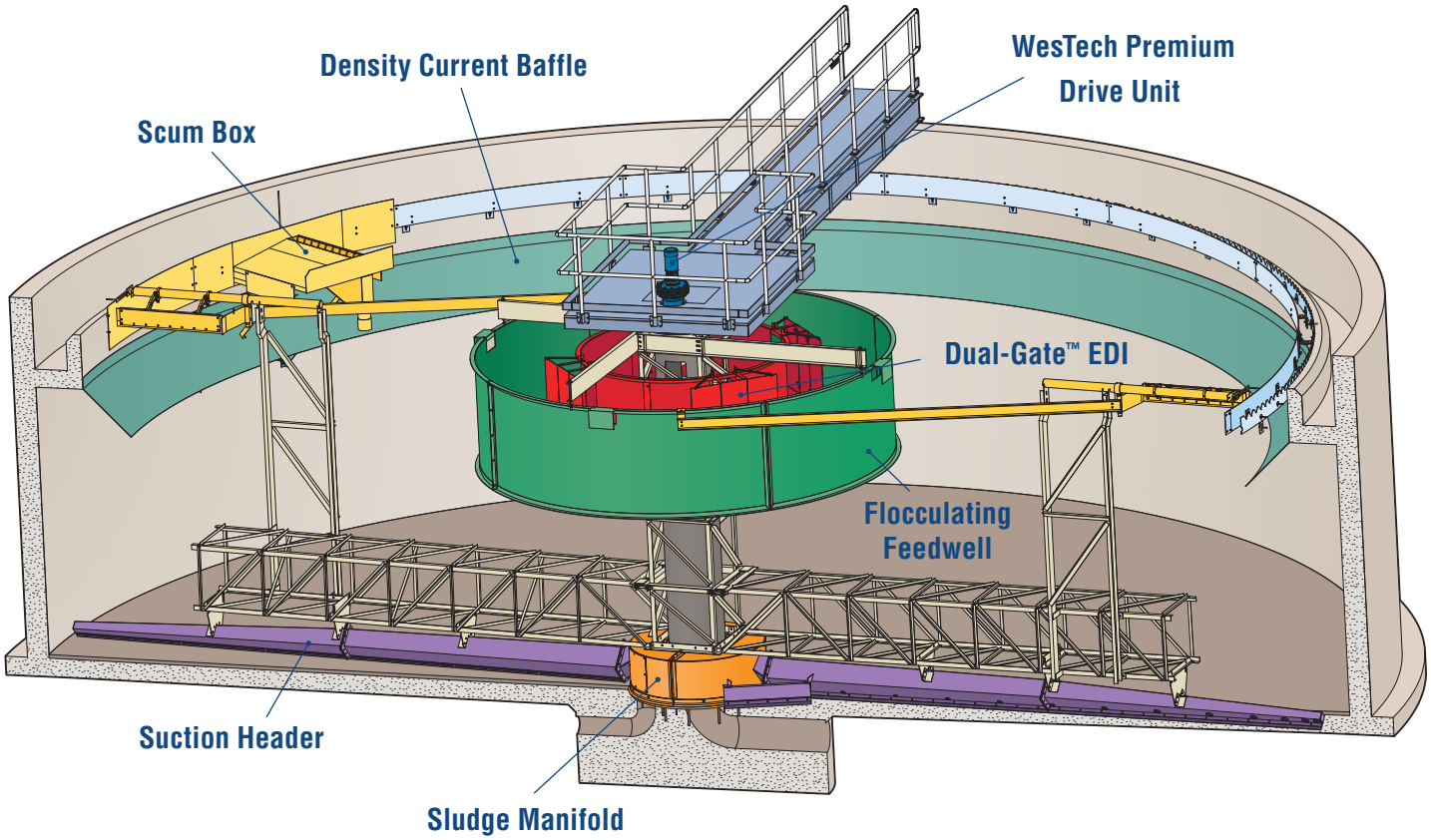

- **Rapid Removal of Settled Solids**
- **Uniform Sludge Removal Across Tank Floor**
- **Reduces Phosphorus Release in BNR Plants**
- **Reduces Denitrification in the Sludge Blanket**

OVER 250 SUCTION HEADER CLARIFIERS ARE CURRENTLY IN OPERATION

Full-Scale Testing

WesTech has built a full scale hydraulic suction header test tank to develop computer algorithms that predict actual flows and headlosses, rather than relying on error-prone dye testing. Our computerized header design software, combined with our COP™ component sizing software, allows WesTech to provide the most effective suction header clarifiers available.

SuperSettler™ Inclined Plate Settler

High Rate Settling

Designed with your limited space in mind, the SuperSettler® inclined plate settler features the necessary design elements to achieve your separation requirements, achieving maximum efficiency with a minimal footprint.

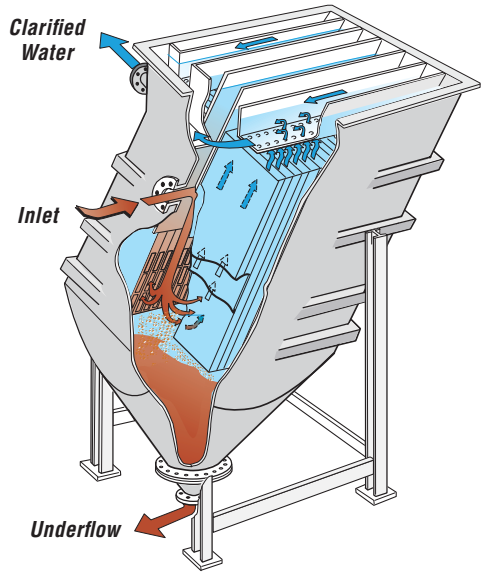

Customization

Whether equipped with a sludge discharge scraper, a flocculation tank, or used in either a concrete or steel tank, we have the right inclined plate model to fit your needs.

- **SS, FRP, and PVC Plates**
- **50, 60, 80, and 100mm Plate Spacing**
- **Stand Alone Units or Plate Packs**

Applications

- **Surface Water Pretreatment**
- **Backwash Water Clarification**
- **Primary and Secondary Settling**

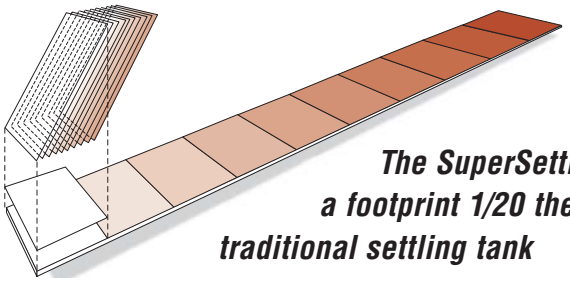

The SuperSettler™ features a footprint 1/20 the size of a traditional settling tank

Filter Backwash Recovery

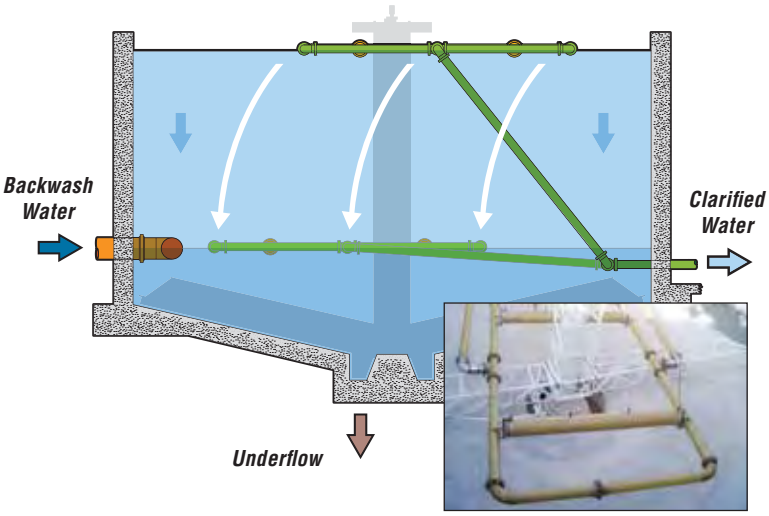

Fill and Decant Clarifiers

- **Floating**
- **Motorized**
- **Fixed**

Fill and decant clarifiers are an ideal fit for your large filter backwash clarification needs. The clarifier basin is designed to handle your backwash surge volume, thus eliminating the need for a separate equalization basin. After the backwash water fills your clarifier basin, the solids are allowed to settle before the clarified supernatant is drawn off by a decant mechanism.

Thickening

WesTech heavy-duty sludge thickeners are designed to handle sludges from both primary and secondary treatment, advanced waste treatment processes, and lime softening applications. Our thickeners are driven by WesTech's proven drives, individually sized for each application. Positive torque control provides protection against overloads.

Rake arm configuration and component strength are designed specifically for heavy duty service. Rakes with vertical pickets and drive rake lifting devices are available.

Thickening of:

- **Coagulant Sludge**
- **Lime Softening Sludge**
- **Wastewater Biosolids**

Premium Drives

WesTech's Premium Drives play a key role in the success of your clarifier operation. Our drive unit delivers a flexible design, precision components, and strict quality control. WesTech guarantees a long drive life and the best fit for your clarifier needs.

Cage Drive

Shaft Drive

Heavy Duty

WesTech's multiple pinion drive employs a single precision bearing to produce extraordinary torques for industrial applications.

Optional Cast Ductile Iron

Cast ductile iron drives feature superior corrosion resistance and strength for tough environments.

Component designs are being continually refined through field experience and the application of emerging technologies. Continual refinement provides our customers with demonstrated trouble-free, highly efficient, proven equipment. Available as new equipment or as retrofit to existing installations, WesTech design programs will optimize the performance of all types of clarifiers. Because we design to the specific process and existing dimensional requirements of each plant, WesTech is the clear choice for all clarifiers.

WesTech Municipal Sedimentation Products

- *COP™ Clarifiers*
- *Suction Header Clarifiers*
- *Suction Pipe Clarifiers*
- *Conventional Rake Clarifiers*
- *Solids CONTACT CLARIFIER™*
- *Flocculating Clarifiers*
- *SuperSettler™*
- *Wastewater Thickeners*
- *Water Thickeners*
- *Decant Clarifiers*
- *Premium Drive Units*

How does working with an employee-owned company benefit you?

Our employee-owners have a deep commitment to the success of WesTech. As the sole stockholders in WesTech, employee-owners directly benefit from successful projects and happy customers.

Employee ownership creates an environment in which people want to contribute to this common goal. Our promise is the value we give our customers and the quality of our equipment.

PLEASE CALL US TODAY TO DISCUSS YOUR CLARIFIER NEEDS

WESTECH
Process Equipment. Process Driven.

Tel: 801.265.1000
Fax: 801.265.1080
www.westech-inc.com
info@westech-inc.com
P.O. Box 65068,
Salt Lake City, Utah
84165-0068

Represented by:

© WesTech Engineering, Inc. 2009

Job No.	Year	Location	Qty	Size	Equipment/Model
21976	0	CHINO II DESALTER CONCENTRA MIRA LOMA CA US	2		THICKENER THS12
22035	0	SAN JACINTO RIVER AUTHORITY CONROE TX US	2	45' DIA.	THICKENERS THS10
22036	0	UTAH VALLEY WTP OREM UT US	2	40' DIA.	THICKENERS THS10
22113	0	LAKE OSWEGO TIGARD WTP	1	50' DIA	THICKENER THC10
4272	1992	FORD MEXICO EDO DE MEXICO MX	1	9.15M DIA	THICKENER TH
4272	1992	FORD MEXICO EDO DE MEXICO MX	1	18.9M DIA	THICKENER THS
4435	1993	TEXMALUCAN PUEBLA MX	2	4.69 M	THICKENER DWGS & DR THS10
4435	1993	TEXMALUCAN PUEBLA MX	3	11.43 M	THICKENERS THS10
4435	1993	TEXMALUCAN PUEBLA MX	3	16.17 M	THICKENERS THS10
4583	1993	PORT ORANGE			THICKENER TH
4322	1993	MELBOURNE WTP MELBOURNE FL US	1	55' DIA.	THICKENER THS13
4305	1994	MODESTO MODESTO CA US	1	40' DIA.	SLUDGE THICKENER THC10
4521	1994	CITY OF COCOA COCOA FL US	2	40' DIA.	THICKENERS THX

Job No.	Year	Location	Qty	Size	Equipment/Model
4591	1995	NO MECKLENBERG HUNTERSVILLE NC US	1	50' DIA.	THICKENER THC
4799	1996	S NAPA THAILAND WWTP BANGKOK TH	1	7M DIA.	THICKENER,DRIVE,ENG THS10
5009	1997	PRICE RIVER PRICE UT US	1	40' DIA.	ALUMINUM THICKENER THS10
5144	1998	CET GRAND ISLAND NE US	1	10' DIA.	THICKENER THS10
5164	1998	PUYALLUP PUYALLUP WA US	1	35' DIA.	THICKENER THS10
18072	1998	WEIRTON WEIRTON WV US	1	35' DIA.	THICKENER THS10P
18220	1999	WEBER BASIN BOUNTIFUL UT US	1	75' DIA	SLUDGE THICKENER THS10
18207	1999	LAUDERHILL LAUDERHILL FL US	1	40'	GRAVITY THICKENER THS
18338	1999	BLACKWELL WTP BLACKWELL OK US	1	35' DIA	THICKENER THS12
18519	2001	KERR LAKE HENDERSON NC US	2	80' DIA	THICKENERS THC20
18678	2001	FUJIAN FUJIAN CN	2	40' DIA	THICKENERS THC11
18615	2001	MONROE WTP BLOOMINGTON IN US	1	40' DIA	THICKENER THC10P
18760	2002	CHATTAHOOCHEE WTP ATLANTA	2	85' DIA	THICKENERS THC10

Job No.	Year	Location	Qty	Size	Equipment/Model
		GA US			
18787	2002	CROSS CITY WTP CROSS CITY FL US	1	10' DIA	THICKENER THS10
18800	2002	ORMOND BEACH ORMOND BEACH FL US	1	30' DIA	THICKENER THS12P
19089	2003	WV AMERICAN WATER CHARLESTON WV US	1	90' DIA.	THICKENER THC20
19382	2005	CULEBRINAS WTP PR	1	40' DIA	THICKENER THS10
19547	2005	FRANKLIN COUNTY CHAMBERSBURG PA US	1	30' DIA	THICKENER THS10
19433	2005	NORWOOD OEFFLER WTP NORTH MIAMI BEACH FL US	1	35' DIA	THICKENER THS13P
19591	2005	HOUSTON N.E. HUMBLE TX US	2	30' DIA	THICKENERS THS10P
19588	2005	NASIRIYAH IQ	40	16' DIA	VERTICAL FLOCC THV20
19366	2005	SASKATOON WTP SASKATOON SASKATCHEWAN CA	1	50' DIA	THICKENER THS32
19366	2005	SASKATOON WTP SASKATOON SASKATCHEWAN CA	1	50' DIA	THICKENER THS32
19584	2005	RC HARRIS WFP TORONTO, ONTARIO ONT CA	4	13.5 M DIA	THICKENERS THS10P
19655	2006	FOX HILLS WTP LOS BANOS CA US	1	12' DIA	THICKENER THS10P
19722	2006	PORT ORANGE	2	35' DIA	THICKENERS

Job No.	Year	Location	Qty	Size	Equipment/Model
		PORT ORANGE FL US			THS13
19651	2006	FENA SAME AS JOB 4564A GU	1	40' DIA	THICKENER THS10P
19686	2006	SEYMOUR CAPILANO FP NORTH VANCOUVER BC CA	2	14.5 METERS	THICKENERS THS30P
19770	2006	EL YUNQUE PR	1	90' DIA	THICKENER THC10B
19788	2006	BISMARCK BISMARK ND US	2	40' DIA	THICKENERS THS13P
19666	2006	AUBURN AUBURN CA US	1	35' DIA	THICKENER THS10P
19729	2006	OMAHA MUD OMAHA NE US	2	60' DIA	THICKENERS THC10P
19872	2007	ROSEVILLE ROSEVILLE CA US	1	35' DIA	THICKENER THS10P
20096	2007	NIXON FORK GOLD McGRATH AK US	1	25' DIA	THICKENER THS12
20044	2007	JENNY LIND WTP / CALAVERAS C VALLEY SPTINGS CA US	1	20' DIA	THICKENER THS10P
19929	2007	PALM BEACH CO. WEST PALM BEACH FL US	1	50' DIA	THICKENER THS12P
20228	2008	EVELETH WTF EVELETH MN US	1	13' DIA	THICKENER THS10
20198	2008	WYOMING CWP WYOMING MI US	1	45' DIA	THICKENER THC10

Job No.	Year	Location	Qty	Size	Equipment/Model
20418	2008	EASTON WTP EASTON PA US	1	65' DIA	THICKENER THC10
20431	2008	WHITE TANKS SURPRISE AZ US	2	85' DIA	THICKENERS THC10P
20476	2009	JAMIESON CANYON WTP NAPA CA US	2	60' DIA	THICKENER THC10
20580	2009	ADJUNTAS PR	1	20' DIA	THICKENER THS10P
20643	2009	SCOTT WTP YAMHILL OR US	1	40' DIA	THICKENER THS10P
20870	2010	CANYON ROAD WTP SANTA FE NM US	2	65' DIA	GRAVITY THICKENERS THC10
21055	2011	NEW KENSINGTON NEW KENSINGTON PA US	1	50' DIA	THICKENER THC10P
20788	2011	LCRWS WTP-PHASE 2 VERMILLION SD US	1	55' DIA	THICKENER THC10
21102	2011	MANDAN MANDAN ND US	1	35' DIA	THICKENER THS13P
21116	2011	MISSOURI CITY MISSOURI CITY TX US	1	36' DIA	THICKENER THS10P
21331	2012	CORAL SPRINGS WTP POMPANO BEACH FL US	2	45' DIA X 11'9" SWD	THICKENER MECHANISMS THS12P
21166	2012	LAKE PEND ORIELLE WTP SANDPOINT ID US	1	50' DIA	THICKENER THS10P
21096	2013	CITY OF AUSTIN WTP4 AUSTIN TX US	1	70' DIA	THICKENER THC10P

Job No.	Year	Location	Qty	Size	Equipment/Model
21483	2013	BOZEMAN WTP BOZEMAN MT US	1	22' DIA.	THICKENER THS12P
21848	2013	GREEN RIVER FILTRATION FACILI RAVENSDALE WA US	1	90' DIA.	THICKENER THC20P
21691	2013	COWETA WTP	2	30' DIA.	THICKENER MECHANISMS THS12
21621	2013	LAKE HURON WTP ON CA	2	9 m DIA X 8.8 M	THICKENER THS12B
22008	2014	E.A. FAIRBAIRN WTP SACRAMENTO CA US	2	65' DIA.	THICKENER THC10P
22008	2014	SACRAMENTO RIVER WTP SACRAMENTO CA US	2	80' DIA.	THICKENER THC10P
		Total Qty =	**136**		

WESTECH

Installation Reference List

Job No.	Name		Plant Flow	Size	Year
4128	**Clark County**		150 MGD	95 feet	1991
	Plant	Clark County Water Reclamation District Las Vegas, NV Paul Szymanski 702-434-6600			
	Engineer	Clark County Water Reclamation District 5857 E. Flamingo Rd Las Vegas, NV 89122 Brent Moser 702-434-6605			
4909	**Bull Creek**		45 MGD	80 feet	1996
	Plant	Bull Creek WTP 8052 Treatment Rd Conway, SC 29528 Randall Johnson 843-443-8300			
	Engineer	Hobbs Upchurch Associates			
18519	**Kerr Lake**		8.5 MGD	80 feet	2000
	Plant	Kerr Lake WTP Henderson, NC Christy Lipscomb 252-438-2141			
	Engineer	Environmental Eng. & Technologies Newport News, VA 757-873-1534			

18760	**Chattahoochee WTP**	65 MGD	85 feet	2001

Plant Chattahoochee WTP
Atlanta, GA
Ross Sturdevant
404-609-7100

Engineer Hartman and Associates
Orlando, FL

19089	**WV American Water**	30 MGD	90 feet	2002

Plant Kanawha Valley Regional WTP
Charleston, WV
Kendall Mitzner
304-340-2096

Engineer Potesta & Associates
1012 Maccorkle Ave SE
Charleston, WV 25304
Terry Moran
304-342-1400

20431	**White Tanks**	14 MGD	85 feet	2008

Plant White Tanks Water Plant
Surprise, AZ
Scott Furman
602-885-1853

Engineer Black and Veatch
Phoenix, AZ
602-381-4400

Attachment O: World Water Works

World water works

Clean Water and Energy from Wastewater

PROPOSAL

Brown & Caldwell-GoldenCO-Boulder Betasso WTP-DAF

PROJECT

Boulder Betasso WTP Sludge Thickening DAF
Upgrade of Existing System

CLIENT

Brown AND Caldwell

John Bratby Ph.D., P.E.*
Vice President - Senior Process Engineer

WWW REPRESENTATIVE

Brian Dieke
Water Tech Group - CO

PRESENTED BY

Greg Parks
World Water Works, Inc.
Direct Phone: **(201) 336-2544**
Email: **gparks@worldwaterworks.com**

October 14, 2013

4000 SW 113th St. ~ Oklahoma City, OK 73173 ~ 1-(405)-ANAMMOX

CONFIDENTIAL

World water works

Clean Water and Energy from Wastewater

DATE:	October 14, 2013
TO:	**John Bratby, Brown and Caldwell**
FROM:	Greg Parks, World Water Works, Inc. (WWW)
CC:	John Schnecker, Chandler Johnson, WWW
	Brian Dieke, Water Tech Group - CO
RE:	WWW PROPOSAL: Boulder Betasso WTP Sludge Thickening DAF

Dear Dr. Bratby,

Thank you for the opportunity to allow World Water Works' to provide the following proposal for a sludge thickening DAF to be utilized at the Boulder Betasso WTP in Boulder, CO. Please note that WWW has extensive experience providing sludge thickening DAF systems with multiple installations in the State of Colorado. WWW has provided two (2) different DAF Options for your consideration; the selection of which option will be best for this application will be pending the final design data. WWW's offering is designed to achieve the lowest life cycle costs and complete project satisfaction.

The document has been organized to provide:

1) OVERVIEW
2) DESIGN BASIS
3) SCOPE OF SUPPLY
4) PRICING & DELIVERY
5) EXPERIENCE
6) GUARANTEE and WARRANTY

We encourage you to reach out to our references to understand how others have enjoyed the experience of working with World Water Works.

WWW has the technology, team and record of customer satisfaction to provide you the assurance of success and long-term value. WWW delivers:

- ✓ A passionate and technical team
- ✓ A track record of customer satisfaction
- ✓ Lasting technology that is capitally and operationally cost effective
- ✓ The ability to achieve the desired goals consistently
- ✓ An industry leading warranty and performance guarantee

We look forward to partnering with you for lasting success! Let's schedule a time in the near future to review this proposal in detail and to move on to the next steps of this project.

Best Regards,

Greg Parks

Greg Parks
World Water Works, Inc.

World water works

Clean Water and Energy from Wastewater

STATEMENT OF CONFIDENTIALITY

THIS DOCUMENT CONTAINS WORLD WATER WORKS' PROPRIETARY AND CONFIDENTIAL INFORMATION AND NEITHER THIS DOCUMENT NOR SAID CONFIDENTIAL INFORMATION SHALL BE PUBLISHED, REPRODUCED, COPIED, DISCLOSED, OR USED FOR ANY PURPOSE OTHER THAN CONSIDERATION OF PURCHASE OF WORLD WATER WORKS TECHNOLOGY, WITHOUT THE WRITTEN APPROVAL OF WORLD WATER WORKS, INC. BY ACCEPTING AND REVIEWING THIS PROPOSAL, YOU AGREE TO THE CONFIDENTIALITY TERMS PROVIDED FOR HEREIN.

World water works

Clean Water and Energy from Wastewater

TABLE OF CONTENTS

STATEMENT OF CONFIDENTIALITY 3

OVERVIEW 5
1. A PASSIONATE TEAM 5
2. PROPOSAL HIGHLIGHTS 5
3. COMPANY BACKGROUND 6
4. REFERENCES 7

DESIGN BASIS 8
5. DESIGN BASIS 8

SCOPE OF SUPPLY 10
6. SCOPE DOCUMENT 10
7. UTILITIES (TO BE PROVIDED BY OTHERS) 11
8. DRAFTING ENGINEERING SERVICES 11
9. FACTORY TESTING – QUALITY CONTROL 11
10. FIELD STARTUP, TRAINING SERVICES 12

PRICING AND DELIVERY 13
11. TIMELINE 13
12. SHIPPING 13
13. PAYMENT TERMS 13
14. PRICE 13

MECHANICAL AND PERFORMANCE GUARANTEE 15
15. MECHANICAL WARRANTY 15
16. PERFORMANCE GUARANTEE 15

CONTRACTUAL INFORMATION 17
17. CUSTOMER TO SUPPLY 17
18. CUSTOMER RESPONSIBILITIES 17
19. INSURANCE 18
20. TRANSFER OF TITLE 18
21. GOVERNING LAW 18

World water works

Clean Water and Energy from Wastewater

OVERVIEW

1. A PASSIONATE TEAM

WWW works for you!

2. PROPOSAL HIGHLIGHTS

- ✓ Full Performance Guarantee
- ✓ Award Winning Technology
- ✓ Flexible Design
- ✓ Low Life Cycle Costs
- ✓ 10 Year Vessel Warranty
- ✓ MADE IN THE USA!
- ✓ Passionate Customer Centric Team

World water works

Clean Water and Energy from Wastewater

3. COMPANY BACKGROUND

#13 in Oklahoma #52 in Manufacturing
America's Fastest Growing Companies

World Water Works (WWW) was founded in 1998 and is headquartered in Oklahoma City, OK with offices throughout the US and India. Our core competency continues to be designing, manufacturing, integrating and delivering the highest quality water, process and wastewater technology in the field. WWW's technology focuses on providing a project's required water quality cost effectively while recovering resources such as energy and/or reusing water whenever possible. Our designs emphasize the following principles:

1) Performance
2) Flexibility
3) Operational Efficiency
4) Ease of Maintenance
5) Compactness
6) Capital Efficiency
7) System Longevity and Robustness

Our passion for and dedication to our customers' success has fueled our global growth and has led to numerous awards. We continue to successfully deliver projects on every major continent.

WWW boasts a world-class five-acre manufacturing center in Oklahoma City with state of the art equipment and advanced manufacturing skills in many plastics and stainless steel. A replica facility in India is forthcoming. Our customer centricity compels us to reinvest heavily into continued Research and Development. As a result, we continue to announce new products, patents and designs which are providing our customers with industry leading technologies to achieve superior sustainability and rapid returns on investment.

World Water Works' team of experts is globally recognized as having some of the pre-eminent technical minds in the industry. Beyond this strength, we are a family – demonstrated through turnover far lower than industry standards! This passion, expertise and dedication yield a truly special and unique group ready and eager to partner with you to solve your treatment goals in a timely and cost effective manner!

4. REFERENCES

WWW recognizes that our success has absolutely everything to do with our customers' satisfaction. Our commitment to that simple concept has resulted in customers who feel passionately about us. Here are a few quotes:

"If you are fortunate enough to have an opportunity to work with World Water Works I suggest you seize the opportunity."

Kirk Oleson, Plant Manager, Rumiano Cheese

"Your fresh approach and unique equipment designs made it easy for me to feel comfortable…World Water Works continued support and communication with our Las Vegas operation has been exceptional."

Dave Muskopf, Vice President, Ken's Foods

"Our experience with World Water Works has been a pleasure. We look forward to working together in the future."

Art McLaughlin, Mill Manager, United CorrStack

"Over 4 years of service with only one minor seal leak. I would say that WWW has more than out-performed the competition"

Chuck Borel, Veolia Water Maintenance

We would happy to provide contact information and/or site tours of any of our facilities at your request.

DESIGN BASIS

5. DESIGN BASIS

It is critical that the basis of design is accurate and meets the facility's current and future demands. The following information relates to the design basis used for this proposal. Any changes will likely impact design and costs.

Project Goals: Sludge Thickening

Type of Facility:

Type of Industry: Municipal: Drinking Water Plant

Facility Information:

Project Type: Upgrade of Existing System
Elevation at Site (ft): 5,430

For DAF Design #1:

Flow Information:

Avg. Month Flowrate (GPD): 27,178 (18.9 GPM)
Max. Month Flowrate (GPD): 203,837 (141.6 GPM)

Design Parameters:

	Units	INFLUENT	EFFLUENT[1]
Total Suspended Solids (TSS)[2]	mg/L	15,000	<1,500
Total Suspended Solids (TSS)[3]	mg/L	2,000	<200
Total Solids (%TS)	mg/L	N/A	>4.0%
pH	S.U.	6 - 8	
Maximum Temperature	°F	80	

1: DAFs are designed to remove Free FOGs, TSS and Insoluble Organics Only and actual removal efficiencies will be significantly affected by the pH, temperature, TDS and chemical program utilized in the DAF. Chemical Jar Testing should be performed in order to determine the actual reductions across the DAF System.
2: Maximum DAF Influent Flow rate at 15,000 mg/l Influent TSS is 27,178 GPD (18.9 GPM; 3,400 lbs/day)
3: Maximum DAF Influent Flow rate at 2,000 mg/l Influent TSS is 203,837 GPD (141.6 GPM; 3,400 lbs/day)

For DAF Design #2:

Flow Information:

Avg. Month Flowrate (GPD)	81,535 (56.6 GPM)
Max. Month Flowrate (GPD)	203,837 (141.6 GPM)

Design Parameters:

	Units	INFLUENT	EFFLUENT[1]
Total Suspended Solids (TSS)[2]	mg/L	5,000	<500
Total Suspended Solids (TSS)[3]	mg/L	2,000	<200
Total Solids (%TS)	mg/L	N/A	>4.0%
pH	S.U.	6 - 8	
Maximum Temperature	°F	80	

1: DAFs are designed to remove Free FOGs, TSS and Insoluble Organics Only and actual removal efficiencies will be significantly affected by the pH, temperature, TDS and chemical program utilized in the DAF. Chemical Jar Testing should be performed in order to determine the actual reductions across the DAF System.

2: Maximum DAF Influent Flow rate at 5,000 mg/l Influent TSS is 81,535 GPD (56.6 GPM; 3,400 lbs/day)

3: Maximum DAF Influent Flow rate at 2,000 mg/l Influent TSS is 203,837 GPD (141.6 GPM; 3,400 lbs/day)

World water works

Clean Water and Energy from Wastewater

SCOPE OF SUPPLY

6. SCOPE DOCUMENT

ASSUMPTIONS:

Units of Measure English

WWW PROJECT SCOPE DOCUMENT

Brown & Caldwell-GoldenCO-Boulder Betasso WTP-DAF

Unit Process	Model Number	Equipment Description	Qty	Provided By
Project Mgt, Eng & Design	DRAW-BP	Process Engineering, Design & Project Management	1	WWW
Primary Separation	DAF-ROP-17SW	Dissolved Air Flotation-DAF-ROP-17SW	1	WWW
Option #1	BUB-NIK-M65FP-2	Nikuni M65FP-2 (25HP) Dissolved Air Pump System	1	WWW
Max Flow: 203,837 GPD*		(Projected A:S Ratio: 0.0331)		
(141.6 GPM)	PLAT-PB17SW-R	Basic Platform w/Access Stairs	1	WWW
***Assumes a TSS of 2,000 mg/l**	DAFACC-APF-4	Advanced Pipe Flocculator 4"	1	WWW
Max TSS: 15,000 mg/l*	PLAT-PE-17SW-R	Platform - Extended	1	Optional
***Maximum flow rate at**	DAFACC-TB-SW	Patent Pending Sludge Thickening Beach	1	Optional
15,000 mg/l is 27,178 GPD	DAFACC-SG-DAF-17SW	Splash Guard	1	Optional
(19 GPM).	DAFACC-CV-DAF-17SW	Cover - DAF	1	Optional
	BUB-NIK-M65FP-2	On-the-shelf Spare Nikuni Dissolved Air Pump	1	Optional
	PUMP-RL-50	Rotary Lobe Sludge Pump (3HP)	1	Optional
	VFD-0030	VFD - 3 HP Allen Bradley (For Sludge Pump)	1	Optional
	CHEM-CS1-CD	Chemical Feed - Coagulant Dilution - 1 Pump	1	Optional
	CHEM-CS1-EP-14	Chemical Feed - Emulsion Polymer Makedown - 1 Pump	1	Optional
Primary Separation	DAF-RSP-45MS	Dissolved Air Flotation-DAF-RSP-45MS	1	WWW
Option #2	BUB-NIK-M65FP-1-S-V-B-R	Nikuni M65FP-1 (20HP) Dissolved Air Pump System	1	WWW
Max Flow: 203,837 GPD*		(Projected A:S Ratio: 0.0195)		
(141.6 GPM)	PLAT-PB-45MS-F-R	Basic Platform w/Access Stairs	1	WWW
***Assumes a TSS of 2,000 mg/l**	DAFACC-APF-4	Advanced Pipe Flocculator 4"	1	WWW
Max TSS: 5,000 mg/l*	PLAT-PE-45MS-R	Platform - Extended	1	Optional
***Maximum flow rate at**	DAFACC-TB-MS	Thickening Beach - for MS models	1	Optional
5,000 mg/l is 81,535 GPD	DAFACC-SG-DAF-45MS	Splash Guard	1	Optional
(56.6 GPM).	DAFACC-CV-DAF-45MS	Cover - DAF	1	Optional
	BUB-NIK-M65FP-1	On-the-shelf Spare Nikuni Dissolved Air Pump	1	Optional
	PUMP-RL-50	Rotary Lobe Sludge Pump (3HP)	1	Optional
	VFD-0030	VFD - 3 HP Allen Bradley (For Sludge Pump)	1	Optional
	CHEM-CS1-CD	Chemical Feed - Coagulant Dilution - 1 Pump	1	Optional
	CHEM-CS1-EP-14	Chemical Feed - Emulsion Polymer Makedown - 1 Pump	1	Optional
Controls & Electrical	CTRLS-RL	Controls - Relay Logic - 1 Panel	1	Optional
		Pre-Wired Panel w/VFD, Motor Starter, Etc		
QC & Shipping	QCSH-	FOB: Job Site	1	WWW
Startup and Training	SERV-FS-5	Field Service - 5 Days	1	WWW
		(Maximum: 1 Trip)		
Warranty	WTY-1/10	WWW Warranty	1	WWW
		Ten (10) Year Vessel Warranty		
		Two (2) Year Mechanical Warranty		

7. UTILITIES (To Be Provided By Others)

POWER	
High Voltage Power	480V, 3 Phase, TBD Amps *Subject to Final Design*
Control Power	24 VDC
Low Voltage Power	
Ancillary	110 V, 1 Phase 20 Amp
Chemical Feed(s)	110 V, 1 Phase 20 Amp *Subject to Final Design*
FRESHWATER	~5 gpm, 60 psi, *(Chemical Makedown and Washdown)*
COMPRESSED AIR	TBD scfm, 80 psi, *(Intermittent Use – AOD Pumps & Valves)*
PHONE LINE/INTERNET ACCESS	Dedicated, Into the Control Panel (Only if PLC Control Panel Upgrade is Selected)

8. DRAFTING ENGINEERING SERVICES

World Water Works offers a variety of drafting and engineering package options from basic packages to full design/build engineering packages. Based upon the scope of supply and client discussions the following package has been selected. Please let us know if a different level of drawings and engineering services are required.

Basic Integrated Solution Engineering Package

The Basic Integrated Solution Engineering Package includes:

- ✓ Piping & Instrument Diagrams (P&ID) for all unit processes of equipment provided
- ✓ General Equipment Layouts for all equipment provided within scope of supply
- ✓ Electrical Panel Layouts and PLC panels (if applicable)

Additional drawing options are available at your request, including stamped drawings.

9. FACTORY TESTING – QUALITY CONTROL

Once the manufacturing of the system is complete, World Water Works conducts a number of tests on the system to assure it meets our high standards. WWW documents and keeps on record these tests which are available to our clients. WWW invites the engineer and/or the client to witness this testing in Oklahoma City, OK.

10. FIELD STARTUP, TRAINING SERVICES

The success of any system relies not only in the excellence of the technology and the proper design; it also relies upon proper operations. With years of experience, WWW has developed highly effective training methods to assure success. This includes a specialized 1-2 hour system overview presentation, numerous hours (package based) of hands-on training, provision of "one-sheets" at each control point, user-friendly manuals, and intuitive controls.

World Water Works offers a variety of field service package options that can be tailored to best meet the project needs and treatment goals. Based upon the scope of supply and client discussions the following package has been selected. Please let us know if a different level of onsite time is desired.

Five Day Field Service (FS-5)

Five (5) days of Installation Inspection, Startup, Support, and Training will be offered into this package (Maximum: 1 Trip). Additional support requirements will be billed at $1,000/day plus expenses and will be billed at a minimum of 2 days.

World water works

Clean Water and Energy from Wastewater

PRICING and DELIVERY

11. TIMELINE

Submittal Preparation	4 weeks
Equipment Construction	10-14 weeks
Inspection & Shipment	1-2 weeks

Note: Project delivery timing will be subject to timing of the order and timely approvals and payments by the customer. WWW manufactures its technology fully in-house which gives us greater flexibility in meeting scheduling demands. Please inquire about special timing requirements.

12. SHIPPING

FOB Point	Destination
Shipping & Handling Terms	Freight Allowed

13. PAYMENT TERMS

10% Down Payment
80% Upon System Delivery
10% Upon Performance (Not to exceed 60 Days From Shipping)
All Payments Net 30 Days

14. PRICE

DAF System Option #1:

Total System Price as Quoted:	$	323,086 US
Startup and Training:	$	Included
TOTAL:	$	323,086 US

Shipping (FOB: Jobsite): $ Included in Price

This includes the specified equipment and services in the scope section labeled “WWW”, but are not inclusive of any of the items labeled “BY OTHERS”, “OPTIONAL”, “EXISTING”, or the responsibilities of the Customer itemized in the section below titled “CUSTOMER TO SUPPLY” and “CUSTOMER RESPONSIBILITIES”. This pricing also does not include any applicable local, state, and federal sales and use taxes, tariffs, duties, import taxes, bonding, system installation costs and equipment shipping costs beyond what is stated.

DAF System Option #2:

Total System Price as Quoted:	$	185,842 US
Startup and Training:	$	Included
TOTAL:	$	185,842 US
Shipping (FOB: Jobsite):	$	Included in Price
DAF System Options:		
Extended Platform:	$	8,360 US
On-the-Shelf Spare Nikuni Pump:	$	8,950 US
Splash Guard:	$	3,096 US
Relay Logic Control Panel:	$	13,600 US
Sludge Pump w/VFD:	$	14,575 US
DAF Vapor Cover:	$	11,336 US
Patent Pending Sludge Thickening Beach:	$	38,400 US
Coag & Floc Make-Down/Feed Systems:	$	12,867 US

This includes the specified equipment and services in the scope section labeled “WWW”, but are not inclusive of any of the items labeled “BY OTHERS”, “OPTIONAL”, “EXISTING”, or the responsibilities of the Customer itemized in the section below titled “CUSTOMER TO SUPPLY” and “CUSTOMER RESPONSIBILITIES”. This pricing also does not include any applicable local, state, and federal sales and use taxes, tariffs, duties, import taxes, bonding, system installation costs and equipment shipping costs beyond what is stated.

MECHANICAL and PERFORMANCE GUARANTEE

15. MECHANICAL WARRANTY

Equipment will be warranted from defects in materials, workmanship and design for a period of 12 months from the date upon which the goods are used or put into operation or 18 months from shipment, whichever occurs first. The polypropylene DAF vessel will be warranted from defects in materials, workmanship and design for a period of 10 years from the date of shipment. Warranty is contingent upon the system being stored, installed, operated and maintained in accordance with World Water Works' instructions. Extended warranties are available for an additional cost.

16. PERFORMANCE GUARANTEE

SCOPE AND TIME LIMITATIONS: World Water Works guarantees the process results specified below for a period of one (1) year from successful start-up, only if the DAF system is operated under conditions and at loads for which sold and handling water, liquid or material conforming to the analysis furnished to World Water Works, or the samples submitted, or as described in the below influent wastewater characteristics. In any event, successful completion of performance testing, whether performed with or without the participation of World Water Works, shall be sufficient evidence that the process meets all discharge requirements, as specified herein, and shall release any outstanding monies held. After one (1) year of operation under conditions and at loads for which sold and handling water, liquid or material conforming to the analysis furnished World Water Works, or the samples submitted, or as described in the specifications shall be sufficient evidence that this process has met all discharge requirements, as specified herein, and shall release World Water Works from further obligations under this Process Guarantee.

NOTICE REQUIREMENT AND REMEDY: World Water Works shall, upon prompt written notice of any breach of this guarantee, determine whether World Water Works is responsible for the Product's failure to fulfill this guarantee. If it is determined that World Water Works is responsible, World Water Works shall make every reasonable effort to correct the failure at its expense.

EXCLUSIONS: If changes in load or composition of the material being treated occur, or if the Products are not installed, maintained and operated in accordance with World Water Works' written instructions, this guarantee shall be null and void.

LIMITATION OF LIABILITY: World Water Works' total liability to Purchaser, including costs incurred or expended by World Water Works in attempting to correct all process deficiencies, shall under no circumstances exceed in the aggregate the total Purchase Price received by World Water Works under this contract or, if such failure is attributable to only a specific part or item of the Products provided hereunder, the value of the specific part or item that has failed to meet guaranteed process results. THE REMEDIES PROVIDED HEREIN ARE EXCLUSIVE AND WORLD WATER WORKS SHALL INCUR NO LIABILITY TO PURCHASER IN ADDITION TO THAT STATED HEREIN.

ACCEPTANCE TESTS: Upon completion of the treatment facilities and sufficient time for bioacclimation (approx. 2-3 months) (if applicable), a 5-day acceptance test shall be run by WWW on the system. All sampling and analytical support will be the responsibility of the Owner. The Owner shall supply supplemental labor, and all necessary chemicals, utilities, and other services necessary for operation of the equipment in accordance to the Operation & Maintenance Manuals and procedures provided with the system and conduct of the testing program.

The acceptance test shall commence at a date which is mutually agreeable between all parties, but no longer than three months after initial startup. Initial startup shall include filling the units with water, adjustment of chemical feed systems, adjustment of any equipment or systems, electrical checkout of chemical and treatment systems, and electrical checkout of control panels or loops. After the equipment has been "debugged" and the bacterial population is allowed time to mature and all parties agree the plant is ready for service, the acceptance test period shall be scheduled.

The acceptance test shall be conducted over a 5-day period. **The proposed process guarantee is based on the wastewater influent characteristics and flow not exceeding those stated in the Section titled "DESIGN BASIS" above with the system producing the effluent limits stated in the same Section.**

- The BOD, COD, and/or TSS sample(s) shall be 24 hour composite of influent and effluent to the system. The FOG sample shall be a grab sample of influent and effluent to the system.
- Results obtained from the 5 days of testing will be averaged to obtain the Average Daily results.

The following chemicals shall be available for use in the treatment process in dosages required for adequate treatment:

- PH Adjustment Chemicals
- Ammonium Hydroxide (for Biological Systems)
- Phosphoric Acid (for Biological Systems)
- Coagulant (of type previously determined appropriate)
- Polymer (of type previously determined appropriate)

In the case that a biological process is included in the scope, the client will not use the following chemicals in its sanitation process which will have a harmful impact on bacteria: Peracetic Acid, Quaternary Ammonia and/or silicon based anti-foams.

During the performance test, World Water Works shall have the capability to adjust all chemicals in order to optimize their performance of the treatment system. If the Process unit(s) meet the guarantee requirements, the Owner will accept the process unit(s).

If, during the initial 5-day performance test, the equipment fails to perform to the process requirements, then the equipment supplier shall be given reasonable time to perform corrective action, after which a second 5-day performance test will be granted under the conditions specified for the initial test.

CONTRACTUAL INFORMATION

17. CUSTOMER TO SUPPLY

- All Costs of Installation to include, but not be limited to: System Unloading, Piping and Electrical Installation, any/all Building/Foundation work, Permitting Costs, etc.
- Sufficient room for the equipment, sufficient water, sufficient heating and/or cooling, and sufficient compressed air to meet the requirements of the project.
- All utilities required to operate the system to include, but not be limited to: phone, electrical power supply, fresh water and compressed air.
- Any and all chemicals needed to accomplish the wastewater treatment.
- Adequate sewer/disposal system sufficient for the proposed project.
- Customer shall inform Company of any third party inspection requirements.
- Customer shall pay any and all charges, which may be incurred for third party approval. Licenses and permits as required.
- Sales and use tax and duties if applicable.
- Any necessary laboratory testing.
- Personnel trainable in operation and control of system.
- The above listed materials are based on the Company's interpretation of the plans and specifications. Any changes to this proposal are subject to price revision.

18. CUSTOMER RESPONSIBILITIES

- If the Customer delays the scheduled shipment beyond 30 days, Customer is responsible for payment in full and a storage fee of $1,000/week will apply.
- Customer should be prepared for all scheduled on-site visits for various technical tasks (i.e. programming, testing, start-up). Customer shall be responsible for time and expense incurred if they are not ready for such visits. In this case, Company requests notification and/or postponement of scheduled visits.
- Fee reimbursement at applicable rates if service is required because of customer negligence or abuse of equipment.
- Reveal to Company sufficient details regarding the composition of the feed stream to permit Company to evaluate the suitability of the feed stream for the proposed process. Customer agrees not to withhold any pertinent knowledge regarding the suitability of the feed stream for processing by the technology proposed.
- Cancellation at any time will result in a 25% penalty plus reimbursement for all work performed to date and any other costs incurred by WWW.

19. INSURANCE

World Water Works, Inc. is fully insured with the following policies:

General Liability	$10,000,000
Professional Liability	$ 5,000,000
Auto Insurance	$ 1,000,000

20. TRANSFER OF TITLE

Title to all equipment, together with any warranties furnished by the manufacturer, will be transferred to the Customer upon payment of the total selling price. The risks of loss and all other obligations will be transferred to the Customer as stated in details listed within Section 11.

21. GOVERNING LAW

This Agreement shall be governed by and construed in accordance with the laws of the State of Oklahoma applicable herein without regard to principles in conflict of laws and venue shall be placed in the courts of the State of Oklahoma.

IN WITNESS WHEREOF the parties have executed this Agreement on the date below.

World Water Works, Inc.	Brown & Caldwell
By:_____	By:_____
Print Name	*Print Name*
Sign:_____	Sign:_____
Title:_____	Title:_____
Date:_____	Date:_____

ITEM NO.	DESCRIPTION
1	EFFLUENT DRAIN 1 1/2" PVC BALL VALVE
2	EFFLUENT 12" FLANGE 150 LB
3	NIKUNI SUCTION 3" FLANGE 150 LB
4	JUNCTION PANEL
5	1/2" AIR CONNECTION 50 PSI (MIN)"
6	NIKUNI PUMP SKID
7	NIKUNI PUMP (M80)
8	DISSOLVED AIR INJECTION VALVES
9	POLYMER INJECTION
10	INFLUENT DRAIN 1" PVC BALL VALVE
11	INFLUENT 8" FLANGE 150 LB
12	GEAR MOTOR

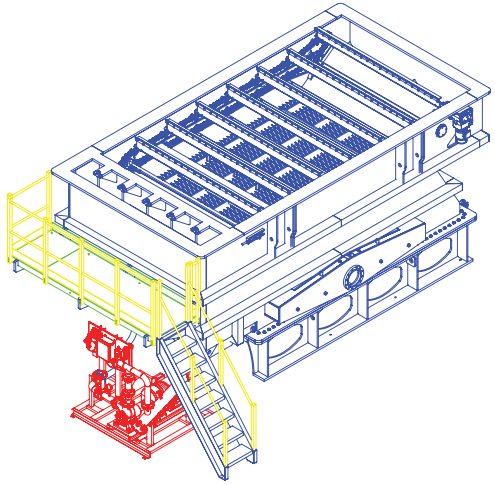

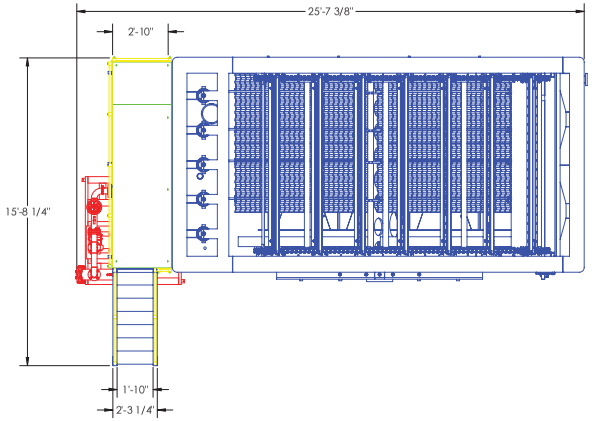

GENERAL NOTES

1. ALL IS TO BE CONSTRUCTED GREY FROM HIGH IMPACT NATURAL STRESS RELIEVED, VIRGIN COPOLYMER POLYPROPYLENE. U.O.W.S
2. SERVICE: WASTE WATER @ 40° ~ 130°
3. ALL FLANGES TWO-HOLED TO THE CENTER LINE
4. STEEL REINFORCEMENTS TO BE: (HSS) CARBON STEEL & TO BE WATER TIGHT SEAL ENCAPSULATED
5. ALL DIMENSIONS SHOWN APPLY TO AMBIENT TEMPERTURE (NON-EXPAND)
6. A SPREADER BEAM IS REQUIRED TO BE DESIGNED TO ENSURE VERTICAL OR MINIMUM OUTWARD LIFT
7. SOME HIDDEN LINES AND COMPONENTS OMITTED FOR CLARITY
8. TANKS TO BE TRANPORTED EMPTY
9. ALL GASKET MATERAIL TO BE 3/16" THK. EPDM
10. ALL FASTENERS TO BE 304 SS
11. TANKS TO BE CLEANED WITH 95° WATER BEFORE INSPECTION
12. HYDRO. TEST TO BE ADMINISTRATED BEFORE SHIPMENT
13. ALL FLANGES FACES TO BE PROTECTED WITH WOOD BLANKS FOR SHIPPING

EMPTY TANK WEIGHT: 16000 LBS.
FULL TANK WEGHT: 73500 LBS.

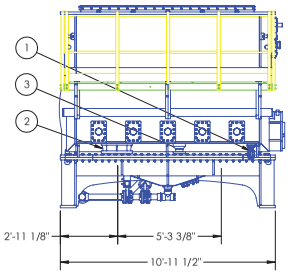

STAIRS/NIKUNI PUMP SKID
OMITTED FOR CLARITY

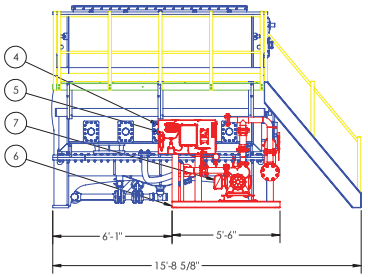

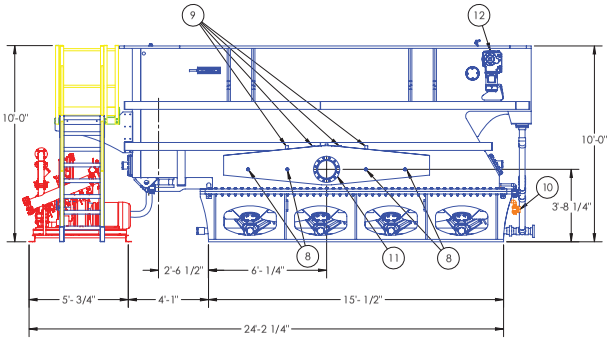

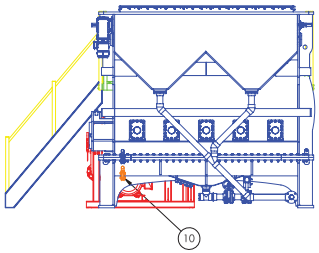

NOT FOR CONSTRUCTION

WWW... CONFIDENTIAL

REV	DATE	DESCRIPTION	BY

World Water Works

CLIENT:
LOCATION: --
FILE NAME: --
DESCRIPTION: RSP-175W-R

P.O.#: --
DRAWN BY: VM
CHECKED BY: --
DATE: 12-01-11
SCALE: 1:38
JOB #:
DRAWING #:

SIZE	SHEET	REV
D	1 OF 1	-

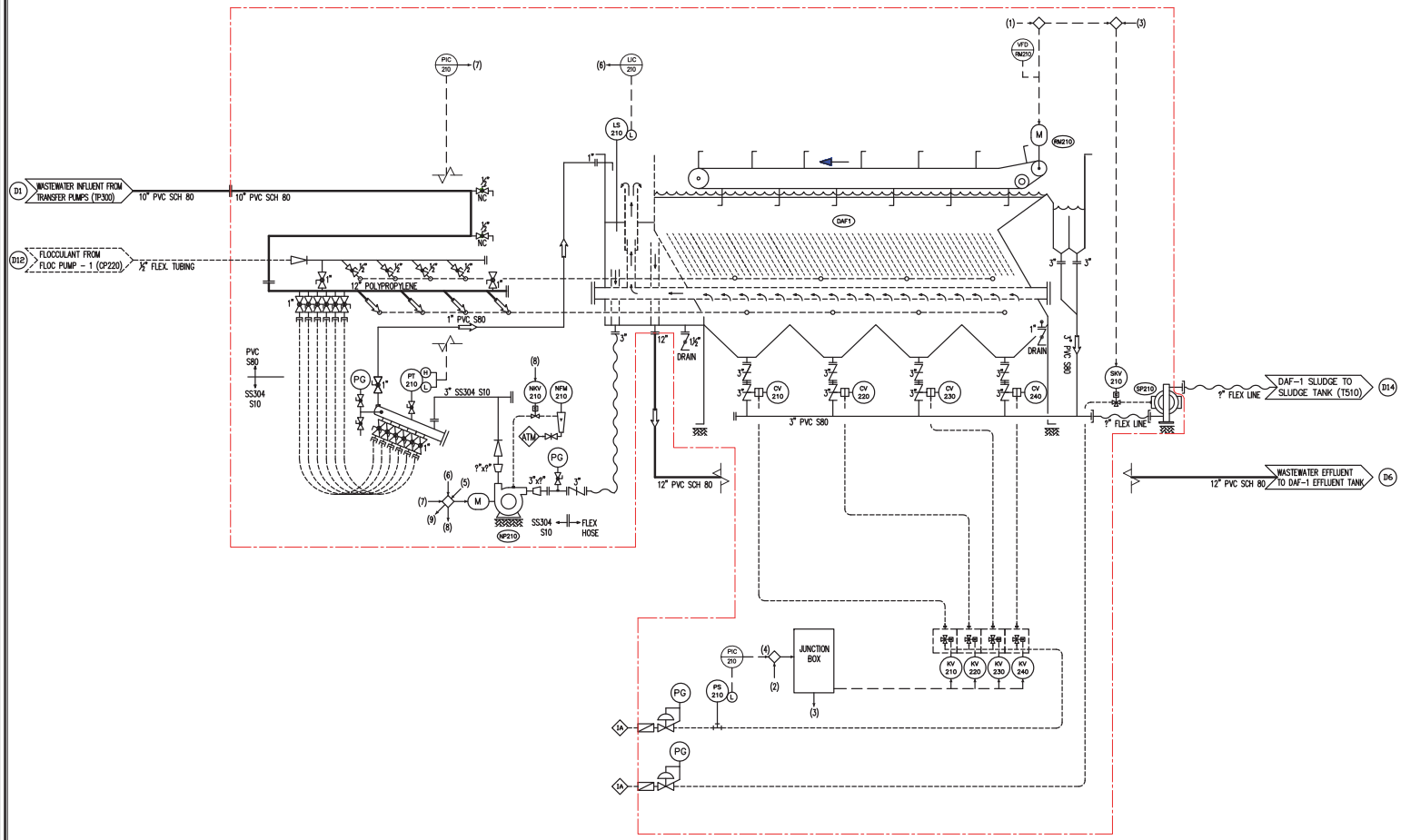

NP210
NIKUNI PUMP
(NEW, BY WWW)
DISSOLVED AIR PUMP
M??, ?? HP, SS304

DAF1
PRIMARY SEPARATION PROCESS - DAF
(NEW, BY WWW)
RSP-17SW, POLYPROYLENE

SP210
DAF SLUDGE PUMP
(NEW, BY WWW)
?" AOD PUMP

NOT FOR CONSTRUCTION

CONTROLS NOTES

(1) ON RECYCLE TIMER SET IN D MODE (RM210)
(2) ON DELAY TIMER SET IN B MODE START SEQUENCE CONES OPEN/CLOSE
(3) SOLIDS PUMP (SP210) ON RELAY SIGNAL FROM JUNCTION BOX
(4) LOW AIR PRESSURE SIGNAL TO JUNCTION BOX OFF
(5) DAF FEED SIGNAL NIKUNI PUMP (NP210) ON DELAY TIMER
(6) DAF LOW LEVEL NIKUNI PUMP (NP210) OFF
(7) HIGH/LOW PRESSURE TRANSMIT NIKUNI PUMP OFF (NP210)
(8) ENERGIZE NIKUNI AIR SOLENOID VALVE (NKV210)
(9) NIKUNI RUN SIGNAL TO CHEMICAL DOSING SYSTEMS ON/OFF

REV.	DATE	DESCRIPTION	BY

CLIENT: -
LOCATION: -
FILE NAME:\\VVV-SALES-DAF P&ID-PRELIMINARY.DWG
DRAWING DESCRIPTION:PROCESS PIPING & INSTRUMENTATION DIAGRAM

PRELIMINARY
P.O.#: -
DRAWN BY: JT
CHECKED BY: KB
DATE: 9/24/2012
SCALE: NONE
JOB #: -
DRAWING # RSP-17SW
SHEET: 1 OF 1 SHEETS

WWW CONFIDENTIAL

CONFIDENTIAL
This document including all information contained thereon, is the exclusive and confidential property of World Water Works, Inc. Except with written permission, the document and information are not to be copied, reproduced or delivered to others.

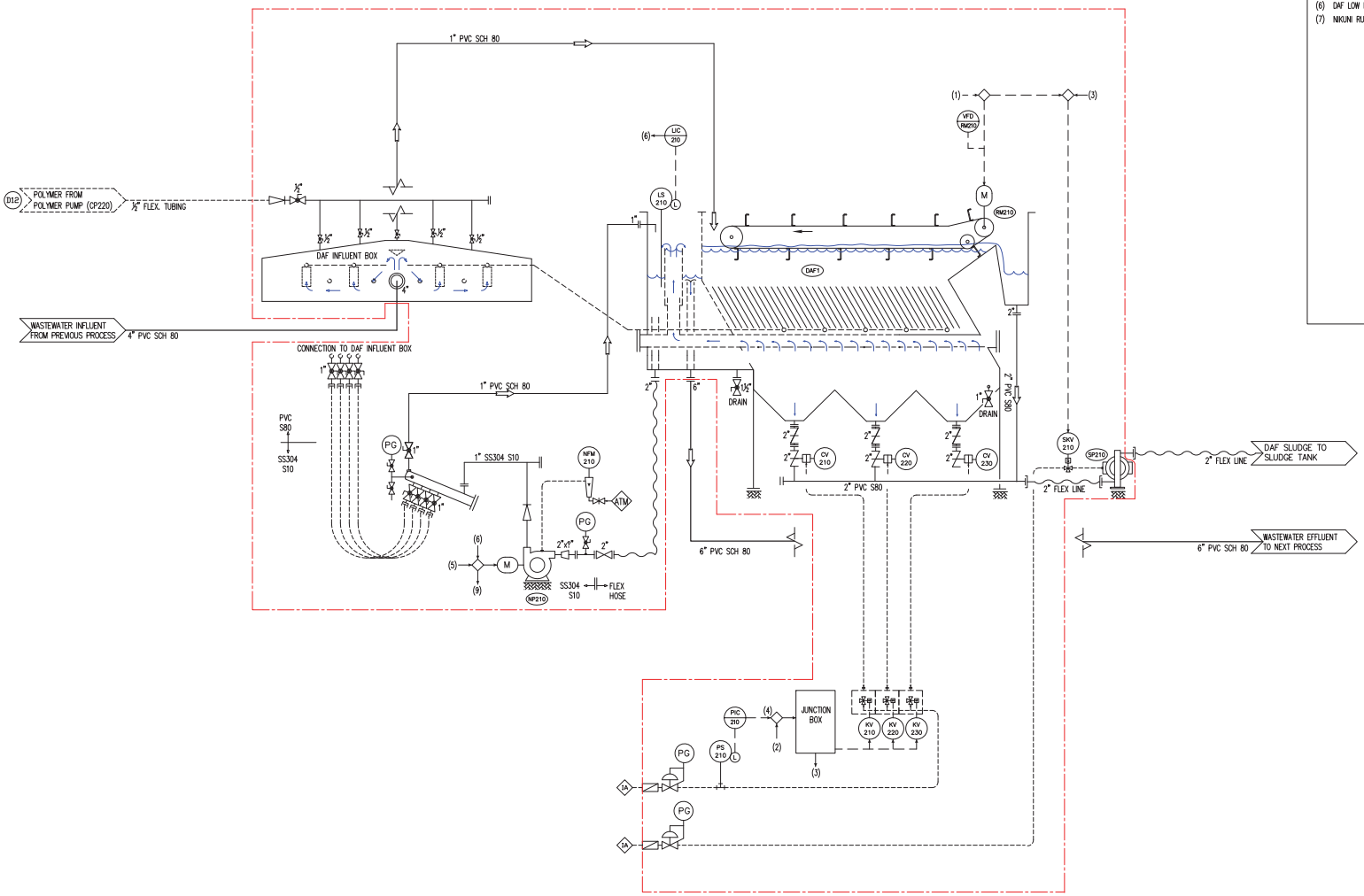

NP210
NIKUNI PUMP
(NEW, BY WWW)
DISSOLVED AIR PUMP
M??, ?? HP, SS304

DAF1
DISSOLVED AIR FLOTATION
(NEW, BY WWW)
RSP-45MS, POLYPROPYLENE

SP210
DAF SLUDGE PUMP
(NEW, BY WWW)
2" AOD PUMP

CONTROLS NOTES

(1) ON RECYCLE TIMER SET IN D MODE (RM210)
(2) ON DELAY TIMER SET IN B MODE START SEQUENCE CONES OPEN/CLOSE
(3) SOLIDS PUMP (SP210) ON RELAY SIGNAL FROM JUNCTION BOX
(4) LOW AIR PRESSURE SIGNAL TO JUNCTION BOX OFF
(5) DAF FEED SIGNAL NIKUNI PUMP (NP210) ON DELAY TIMER
(6) DAF LOW LEVEL NIKUNI PUMP (NP210) OFF
(7) NIKUNI RUN SIGNAL TO CHEMICAL DOSING SYSTEMS ON/OFF

REV.	DATE	DESCRIPTION	BY

world water works
1-800-657-PURE
4000 SW 119th - OKLAHOMA CITY, OK 73137

CLIENT: -
LOCATION: -
FILE NAME: V:\V-V-SALES\P&ID-RSP-45MS-062313.DWG
DRAWING DESCRIPTION: PROCESS PIPING & INSTRUMENTATION DIAGRAM

PRELIMINARY

P.O.#: -
DRAWN BY: JT
CHECKED BY: KB
DATE: 6/21/2013
SCALE: NONE
JOB #: -
DRAWING #: D05 - RSP-30MS
SHEET: 1 OF 1 SHEETS

WWW CONFIDENTIAL

CONFIDENTIAL
This document including all information contained thereon, is the exclusive and confidential property of World Water Works, Inc. Except with written permission, the document and information are not to be copied or reproduced or delivered to others.

RSP-45MS-R-B DAF

ITEM NO.	DESCRIPTION
1	INFLUENT, 3" FLANGE 150 LB
2	EFFLUENT, 4" FLANGE 150 LB
3	INFLUENT DRAIN, 1" PVC BALL VALVE
4	EFFLUENT DRAIN, 1-1/2" PVC BALL VALVE
5	SLUDGE DISCHARGE, 2" FLANGE 150 LB
6	CLEAN WATER EFFLUENT WEIR BOX
7	SLUDGE HOPPER
8	CONE BOTTOM SOLIDS REMOVAL VALVES (AUTO), 2"
9	SKIMMER PADDLE
10	NIKUNI RECIRCULATION, 3" FLANGE 150 LB
11	NIKUNI PUMP SKID (PER SALES PROPOSAL)
12	AIR BLOWDOWN
13	DISSOLVED AIR INJECTION VALVES
14	POLYMER INJECTION
15	1/2" AIR CONNECTION 50 PSI (MIN)"
16	SOLIDS SKIMMER & GEAR DRIVE MOTOR (1/2 HP)
17	JUNCTION PANEL
18	WALKWAY, STD

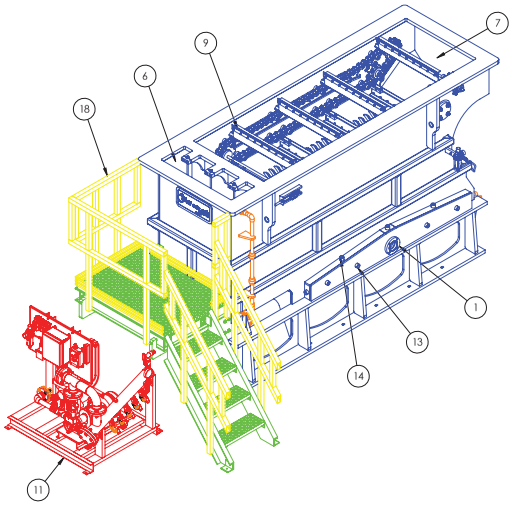

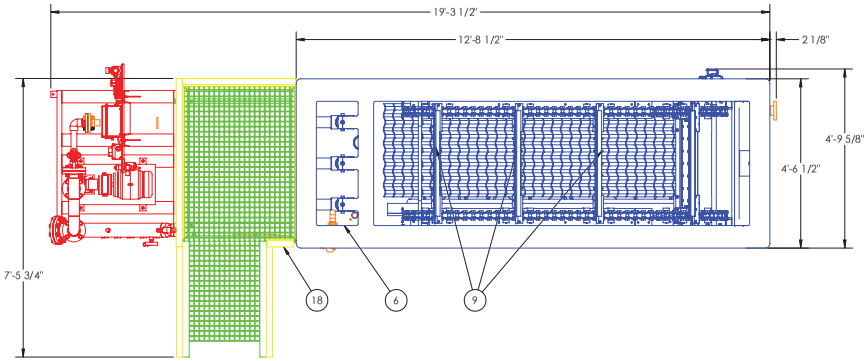

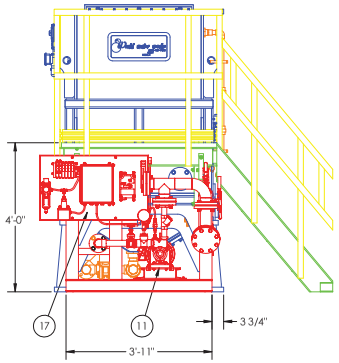

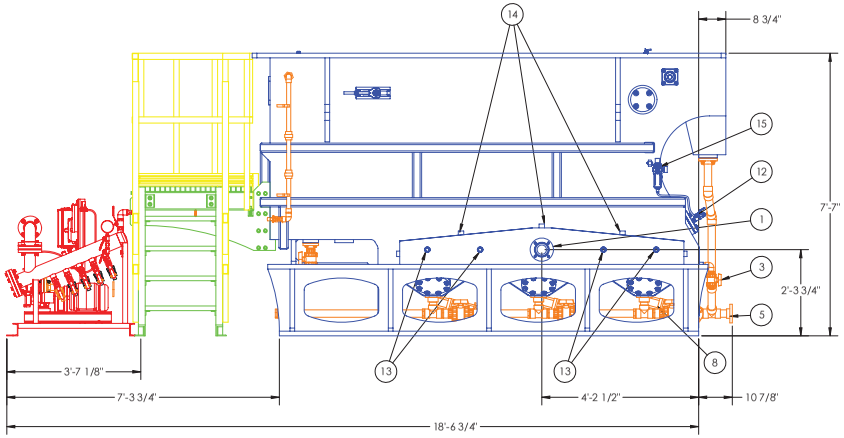

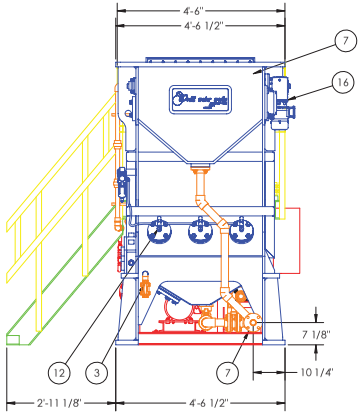

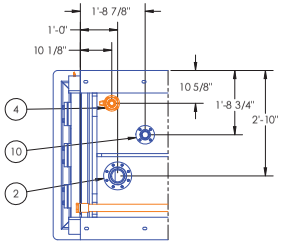

GENERAL NOTES

1. ALL IS TO BE CONSTRUCTED GREY FROM HIGH IMPACT NATURAL STRESS RELIEVED, VIRGIN COPOLYMER POLYPROPYLENE, U.O.W.S
2. SERVICE: WASTE WATER @ 40° ~ 130°
3. ALL FLANGES TWO-HOLED TO THE CENTER LINE
4. STEEL REINFORCEMENTS TO BE: STAINLESS STEEL
5. ALL DIMENSIONS SHOWN APPLY TO AMBIENT TEMPERTURE (NON-EXPAND)
6. A SPREADER BEAM IS REQUIRED TO BE DESIGNED TO ENSURE VERTICAL OR MINIMUM OUTWARD LIFT
7. SOME HIDDEN LINES AND COMPONENTS OMITTED FOR CLARITY
8. TANKS TO BE TRANPORTED EMPTY
9. ALL GASKET MATERAIL TO BE 3/16" THK. EPDM
10. ALL FASTENERS TO BE 304 SS
11. HYDRO. TEST TO BE ADMINSTRATED BEFORE SHIPMENT
12. ALL FLANGES FACES TO BE PROTECTED WITH WOOD BLANKS FOR SHIPPING

EMPTY WEIGHT: 4,000 LBS
OPERATIONAL WEIGHT: 12,000 LBS

NOT FOR CONSTRUCTION

WWW CONFIDENTIAL

CONFIDENTIAL
This document including all information contained herein is the exclusive and confidential property of World Water Works, Inc. Except with written permission, the document and information are not to be copied, reproduced or delivered to others.

REV	DATE	DESCRIPTION	BY

CLIENT:
LOCATION:
FILE NAME: WWW-GA-SALES DRAWING RSP-45MS-R-B
DESCRIPTION: GA-SALES DRAWING RSP-45MS-R-B

SALES DRAWING
P.O.#:
DRAWN BY: RK
CHECKED BY:
DATE: 07/12/2013
SCALE: 1:20
JOB #:
DRAWING #
SHEET: 1 OF 1 SHEETS

Characteristics & Benefits of Polypropylene

Introduction

During the past twenty-five years polypropylene has gained wider acceptance for use in corrosive applications where previously steel vessels with a coated or rubber-lined interior and coated exterior were used. Polypropylene has also been the material of choice to replace tanks and other vessels fabricated from specialty metals such as stainless steel because of reduced original cost and long term cost savings benefits over the life of the equipment.

Characteristics

Polypropylene has the following advantages over conventional materials previously used.

*High chemical and corrosion resistance
*Light weight and rigid
*High tensile strength
*Excellent abrasion resistance
*Low moisture absorption
*Easily machined and cut
*Easy to maintain and clean
*Excellent thermal insulator
*Excellent dielectric properties
*Long life span

Benefits

Polypropylene provides superior qualities and is the most versatile and cost effective plastic in comparison to other thermo-forming and polyolefin materials. It has good impact strength, surface hardness, dimensional stability and excellent abrasion resistance. Polypropylene is resistant to a wide variety of acids, alkalis and solvent solutions with a temperature range up to 200°F. Polypropylene is available in gray with a UV package for outdoor use and is also available in a flame retardant grade. It is USDA approved and meets FDA requirements for food contact.

Polypropylene is a homogeneous material that has the same corrosion resistant properties throughout which eliminate the need for additional maintenance such as re-coating the inside or outside to guard against corrosion. Carbon steel tanks, however, require a two-step process during fabrication to get the necessary protection required for the application.

Handling, installation and relocation of polypropylene equipment is easier because polypropylene is lighter than most other materials used in fabrication. The light weight allows for less expensive structural supports and concrete floors to be required.

Modifications and repairs are easily made with no advanced preparation needed on the material with little down time and usually no need to remove the equipment from service. Our customers have reported that the polypropylene has reduced maintenance cost and provided less disruption in production time.

World water works

Clean Water and Energy from Wastewater

SLUDGE THICKENING BEACH

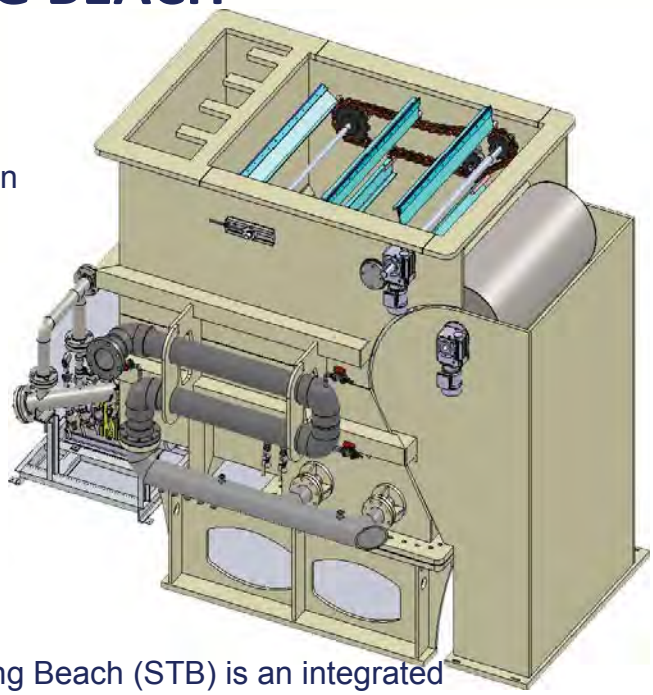

FEATURES

~ Patent Pending Design-International
~ Rotating Sieved Beach (0.01”)
~ 304 SS Wedgewire Screen Construction
~ Screen Integral to DAF System
~ Small Press Section (Fully Adjustable)
~ Internal Automated Spray Bars

BENFITS

~ Increase DAF Float Solids by up to 2X!
~ Minimal Energy Requirements
~ No Additional Chemical Required
~ Minimal Maintenance
~ Small Foot Print
~ Easy to Use

DESCRIPTION

The WWW Patent Pending Sludge Thickening Beach (STB) is an integrated 0.010” (0.25mm) 304 SS Wedgewire External Rotary Screen (ERS) used to further thicken the sludge removed from a DAF unit by allowing free water to drain from the sludge prior to ultimate removal from the DAF unit. WWW testing has shown that the addition of the STB to the DAF unit can increase the %TS of the solids removed from the DAF unit by up to 2X reducing the sludge disposal costs and sludge storage requirements by up to 50%! The screen is located at the top of the traditional sludge beach and is fully automated running in tandem with chain and flight solids removal system. The screen is operated by a small, inverter duty, gear motor minimizing any additional HP requirements. Unlike traditional thickening system; the WWW STB has a very small footprint only adding one to three feet to the system length depending on the model of the unit and requires no additional chemical usage!

The system is highly efficient and requires minimal maintenance, minimal energy and requires no additional chemical usage above what is already being used in the DAF unit for solids separation. World Water Works can provide references and has demonstration units available for testing.

Please call us today to learn more about how WWW can help you to Purify Our Future…1-800-607-PURE!

4000 SW 113th St. ~ Oklahoma City, OK 73173 ~ 1-(405)-ANAMMOX

World water works

Clean Water and Energy from Wastewater

NIKUNI - Efficient, Reliable **Dissolved Air**

FEATURES

~ 5 – 20 Micron Bubbles
~ Highly Saturated Dissolved Air
~ NO Compressed Air Required
~ Low HP Consumption
~ Single Stage, Super Duty Pump Design
~ Self-Priming Capability
~ Glad Packing or Mechanical Seal

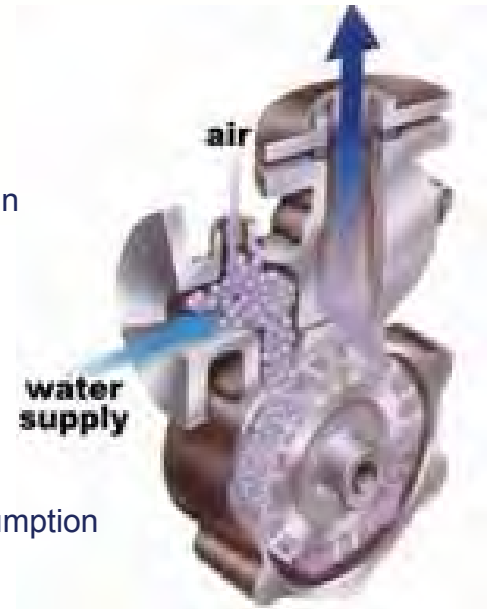

BENFITS

~ Consistent Improved Performance
~ Increased Removal Efficiencies
~ Reduced Maintenance Cost
~ Increased DAF Throughput
~ Reduced Energy and Chemical Consumption

DESCRIPTION

The NIKUNI Pump generates highly saturated dissolved air efficiently and reliably in clean and dirty water fed streams. The many benefits typically provide 2-9 month project justifications. The innovative design uses three types of forces to generate high pressure in a single pass. A symmetrical blade design on either side of the impeller generates three forces. A *friction force* pushes the liquid in the direction of rotation. A *centrifugal force* swings the liquid out in the crosswise direction of rotation. An *axial force* pushes the liquid to both sides of the impeller. In concert, the three forces cause a complex vortex to form which provides the air dissolving action and high pressure desired. Because there is no metal to metal contact at pressure generating point, fine slurries do not cause premature failure. The result is a constant, stable, high pressure flow in a compact design. Because of the simple limited component structure, inspection and replacement of parts is easy. The pump has the ability to self-prime and operation is quiet. World

Water Works has thoroughly tested these pumps in applications where other air dissolving pumps have failed. We can provide you with guaranteed performance and reliability contracts. World Water Works has various models available in stock, ready to ship.

Please call us today to learn more about the new standard in Dissolved Air Microbubble Generation and how WWW can help you to Purify Our Future…1-866-NIKUNI-1 (1-866-654-8641)!

4000 SW 113th St. ~ Oklahoma City, OK 73173 ~ 1-(405)-ANAMMOX

World water works

Clean Water and Energy from Wastewater

Advanced Pipe Flocculator (APF)

FEATURES

~ Provides Superior Chemical Mixing
~ Provides Extended Coagulant/Wastewater Contact time prior to entering DAF Vessel
~ No Mixers (Static or Mechanical)
~ Quick to Clean
~ Provides Multiple Injection Points

BENFITS

~ No Energy Requirements
~ Easy to retrofit existing systems
~ Reduced Chemical Usage
~ Small Foot Print
~ Easy to Use

DESCRIPTION

The WWW Advanced Pipe Flocculator (APF) can be either a self-supporting, stand-alone serpentine mixing system for upgrading/retrofitting of existing systems or can be constructed integral to the WWW DAF System. The WWW APF provides superior mixing of both chemicals and white water with wastewater prior to treatment in a DAF Unit. The system provides far superior mixing when compared to a traditional tank/mixer system. Additionally, the APF uses less energy, requires less maintenance and requires a smaller footprint than traditional tank/mixer systems. Required chemical contract times can be adjusted on a case-by-case basis by varying the number of passes built into the APF. The APF can help reduce chemical usage and provide improved efficiencies in any DAF system with traditional systems or those lacking any mixing system at all.

The system is highly efficient and requires minimal maintenance while providing high quality mixing and contact time. World Water Works can provide references and has demonstration units available for testing.

Please call us today to learn more about how WWW can help you to Purify Our Future…1-800-607-PURE!

4000 SW 113th St. ~ Oklahoma City, OK 73173 ~ 1-(405)-ANAMMOX

Attachment P: Belt Filter Press Installation Summary

Belt Filter Press Installation Summary

There are many belt press examples for dewatering water plant sludges. Some relevant examples are presented below.

Robert A. Skinner Water Plant, Los Angeles, CA

The Robert A. Skinner water plant in Los Angeles treats 175 mgd using alum. Raw water turbidities are 0.6 to 2.5 NTU and suspended solids 1 to 4 mg/l. The alum dosage typically varies from 4 to 8 mg/l with 0.5 to 2.0 mg/l cationic polymer. Sludge production is reported at approximately 14.6 ton dry solids/day. Technical and economic studies carried out on two occasions, comparing filter presses, belt presses, centrifuges, vacuum filters, drying beds, drying basins, and sludge lagoons, concluded that the belt press option was the most viable.

Filter backwash water with solids concentrations of 200 to 800 mg/l, was recovered and thickened to 4 to 10 percent dry solids concentration. Sludge from the clarifiers, at 0.07 to 1.5 percent dry solids, was mixed directly with the thickened backwash sludge, to produce a blended sludge of 0.7 to 4 percent concentration, and fed to two 1.5 meter (5 ft) belt presses.

A cationic polymer is used for dewatering at a concentration of 3 lb/ton dry solids. The application rate to the presses is 400 lb/h.m and 33 gpm/m at a mean thickened concentration of 3.4 percent. The belt velocity is approximately 5.9 ft/min. The mean concentration of the dewatered sludge is 24 percent, and the cake density 70 lb/ft^3.

The dewatering system operates without operator attention 85 to 90 percent of the time. Operator attention is approximately 45 to 60 minutes per operator shift.

Newcastle Water Plant, Newcastle, PA

The Newcastle water plant in Pennsylvania treated a plant flow of 8.4 mgd using alum. Sludge production was 1,620 lb dry solids/day. Filter backwash water was collected in equalization tanks and recycled back to the raw water influent channel. Backwash solids settled jointly in the clarifiers. Sludge removed from the clarifiers, at a mean concentration of 0.5 percent, was sent to gravity thickeners at a loading rate of 0.83 lb/ft^2.d. Polymer was added immediately upstream of the thickener at a dosage of 1.8 to 3 lb/ton dry solids.

Thickened sludge was sent to a 2-meter (6.5 ft) belt press at a loading of 160 lb/h.m. Cake concentrations were typically 25 percent dry solids. The sludge dewatering operation was typically less than 8 hours per day.

The City of Longmont, Colorado used a belt press to dewater alum sludge generated at two water treatment plants. The plants had a collective design capacity of 25 mgd and generated approximately 1.0 ton dry solids/day of alum sludge. Residuals from the plant including filter backwash and sedimentation tank blowdowns were sent to two washwater recovery ponds. Sludge in the ponds was dredged and pumped to the dewatering facility.

The City evaluated different types of drying beds, as well as the belt press option. Principally because of limited land availability and costs, the belt press was selected for dewatering. Dewatered sludge was used for land application, including the recovery of mined land.

The feed rate to the press averaged 61 gpm with a feed concentration of 3.1 percent. Polymer was fed at 4 to 7.5 lb/dry ton, depending on the sludge characteristics. The press achieved cake concentrations averaging 18.7 percent with a solids capture of 98-percent.

Metropolitan Water District of Southern California

The Metropolitan Water District of Southern California reported on alternative processing methods for water plant sludges. On-site pilot tests were conducted at the Jensen water plant using a high-solids (14-roll) belt press, a tower belt press, a centrifuge, and a membrane filter press. The results obtained are summarized as follows:

- The high solids belt press achieved 30 to 32 percent dry solids cake at polymer dosages of 4 to 6 lb/ton dry solids and application rate of 300 to 500 lb/h.m belt width. Solids capture was 90 to 97-percent.
- The tower press achieved 29 to 31 percent dry solids cake at polymer dosages of 11 to 27 lb/ton dry solids and application rate of 330 to 580 lb/h.m belt width. Solids capture was 96 to 98-percent.
- The centrifuge achieved 28 to 32 percent dry solids cake at polymer dosages of 5.4 to 9.0 lb/ton dry solids and solids capture of 96 to 97-percent.
- The membrane filter press achieved 32 to 42 percent dry solids cake at polymer dosages of 1.0 to 2.0 lb/ton dry solids and cycle times of 2.5 to 4 hours. A gravity belt filter was used to pre-thicken sludge before the press

The District selected the belt press option from life cycle costs, including final sludge disposal costs. Dewatered sludge would be further air dried on concrete pads to 50 percent or more. The dried sludge would be transported off site for use as potting soil amendment.

Attachment Q: Opinions of Probable Project Cost

Project: City of Boulder Betasso WTF Residuals Study
Date: 12/3/2013
By: Jamie Eichenberger
Class: 5 (Planning-Level)

Total Project Cost Estimate (TPCE) Summary Sheet

Description	#	Units	Unit Cost	Total Cost
Summary of Construction Costs				
Equalization Tank	200	CY	$ 750	$ 150,000
Gravity Thickener Mechanism	1	EA	$ 400,000	$ 400,000
Polymer Feed System	1	EA	$ 25,000	$ 25,000
Thickened Sludge Pump	2	EA	$ 75,000	$ 150,000
Piping and Valves	1	LS	$ 150,000	$ 150,000
Gravity Thickener Tank (Concrete)	95	CY	$ 750	$ 71,000
Cover	1	EA	$ 120,000	$ 120,000
Building	400	SF	$ 250	$ 100,000
EI&C	15%	LS		$ 170,000
Site Work	1	LS	$ 50,000	$ 50,000
			Subtotal Construction Costs	**$ 1,400,000**
Year of Construction Estimate	2013			
Mid-Point of Construction	2016		Escalation Costs	$130,000
Escalation Rate	3.0%			
			Total Construction Costs	**$ 1,530,000**
Summary of Engineering Fees				
Engineering - Predesign	4.0%			$61,000
Engineering - Design & Bidding Services	8.0%			$122,000
Engineering - Construction	4.0%			$61,000
Resident Engineering	4.0%			$61,000
Post Construction Phase	2.0%			$31,000
Total Percentage	22.0%			
			Total Engineering Costs	**$340,000**
Summary of Administrative Costs				
Control System (included)	0.0%			$0
Land Acquisition	0.0%			$0
City Purchased Equipment	0.0%			$0
Miscellaneous	1.5%			$23,000
Material Testing	0.5%			$8,000
Total Percentage	2.0%			
			Total Administrative Costs	**$31,000**
Summary of Contractor Markups				
Overhead and Profit	9.0%			$138,000
General Conditions	10.0%			$153,000
Start-Up and Training	1.0%			$15,000
Insurance	2.0%			$31,000
Bonds	1.5%			$23,000
Total Percentage	23.5%			
			Total Administrative Costs	**$360,000**
			Total Costs	$ 2,261,000
Contingency	35.0%			$790,000
			Total Project Cost Estimate	**$ 3,100,000**

Project: City of Boulder Betasso WTF Residuals Study
Date: 12/3/2013
By: Jamie Eichenberger
Class: 5 (Planning-Level)

Total Project Cost Estimate (TPCE) Summary Sheet

Description	#	Units	Unit Cost	Total Cost
Summary of Construction Costs				
Equalization Tank	200	CY	$ 750	$ 150,000
Gravity Belt Thickener	1	EA	$ 180,000	$ 180,000
Polymer Feed System	1	EA	$ 25,000	$ 25,000
Thickened Sludge Pump	2	EA	$ 75,000	$ 150,000
Piping and Valves	1	LS	$ 150,000	$ 150,000
Building	1,000	SF	$ 250	$ 250,000
EI&C	15%	LS		$ 140,000
Site Work	1	LS	$ 50,000	$ 50,000
			Subtotal Construction Costs	**$ 1,100,000**
Year of Construction Estimate	2013			
Mid-Point of Construction	2016		Escalation Costs	$102,000
Escalation Rate	3.0%			
			Total Construction Costs	**$ 1,200,000**
Summary of Engineering Fees				
Engineering - Predesign	4.0%			$48,000
Engineering - Design & Bidding Services	8.0%			$96,000
Engineering - Construction	4.0%			$48,000
Resident Engineering	4.0%			$48,000
Post Construction Phase	2.0%			$24,000
Total Percentage	22.0%			
			Total Engineering Costs	**$260,000**
Summary of Administrative Costs				
Control System (included)	0.0%			$0
Land Acquisition	0.0%			$0
City Purchased Equipment	0.0%			$0
Miscellaneous	1.5%			$18,000
Material Testing	0.5%			$6,000
Total Percentage	2.0%			
			Total Administrative Costs	**$24,000**
Summary of Contractor Markups				
Overhead and Profit	9.0%			$108,000
General Conditions	10.0%			$120,000
Start-Up and Training	1.0%			$12,000
Insurance	2.0%			$24,000
Bonds	1.5%			$18,000
Total Percentage	23.5%			
			Total Administrative Costs	**$280,000**
			Total Costs	$ 1,764,000
Contingency	35.0%			$620,000
			Total Project Cost Estimate	**$ 2,400,000**

Project: City of Boulder Betasso WTF Residuals Study
Date: 12/3/2013
By: Jamie Eichenberger
Class: 5 (Planning-Level)

Total Project Cost Estimate (TPCE) Summary Sheet

Description	#	Units	Unit Cost	Total Cost
Summary of Construction Costs				
Equalization Tank	200	CY	$ 750	$ 150,000
Rotary Drum Thickener	1	EA	$ 230,000	$ 230,000
Polymer Feed System	1	EA	$ 25,000	$ 25,000
Thickened Sludge Pump	2	EA	$ 75,000	$ 150,000
Piping and Valves	1	LS	$ 150,000	$ 150,000
Building	800	SF	$ 250	$ 200,000
EI&C	15%	LS		$ 140,000
Site Work	1	LS	$ 50,000	$ 50,000
				$0
			Subtotal Construction Costs	**$ 1,100,000**
Year of Construction Estimate	2013			
Mid-Point of Construction	2016		Escalation Costs	$102,000
Escalation Rate	3.0%			
			Total Construction Costs	**$ 1,200,000**
Summary of Engineering Fees				
Engineering - Predesign	4.0%			$48,000
Engineering - Design & Bidding Services	8.0%			$96,000
Engineering - Construction	4.0%			$48,000
Resident Engineering	4.0%			$48,000
Post Construction Phase	2.0%			$24,000
Total Percentage	22.0%			
			Total Engineering Costs	**$260,000**
Summary of Administrative Costs				
Control System (included)	0.0%			$0
Land Acquisition	0.0%			$0
City Purchased Equipment	0.0%			$0
Miscellaneous	1.5%			$18,000
Material Testing	0.5%			$6,000
Total Percentage	2.0%			
			Total Administrative Costs	**$24,000**
Summary of Contractor Markups				
Overhead and Profit	9.0%			$108,000
General Conditions	10.0%			$120,000
Start-Up and Training	1.0%			$12,000
Insurance	2.0%			$24,000
Bonds	1.5%			$18,000
Total Percentage	23.5%			
			Total Administrative Costs	**$280,000**
			Total Costs	$ 1,764,000
Contingency	35.0%			$620,000
			Total Project Cost Estimate	**$ 2,400,000**

Project: City of Boulder Betasso WTF Residuals Study
Date: 12/3/2013
By: Jamie Eichenberger
Class: 5 (Planning-Level)

Total Project Cost Estimate (TPCE) Summary Sheet

Description	#	Units	Unit Cost	Total Cost
Summary of Construction Costs				
Equalization Tank	200	CY	$ 750	$ 150,000
Dissolved Air Flotation Thickener	1	EA	$ 440,000	$ 440,000
Polymer Feed System	1	EA	$ 25,000	$ 25,000
Thickened Sludge Pump	2	EA	$ 75,000	$ 150,000
Piping and Valves	1	LS	$ 150,000	$ 150,000
Building	1,500	SF	$ 250	$ 375,000
EI&C	15%	LS		$ 190,000
Site Work	1	LS	$ 50,000	$ 50,000
				$0
			Subtotal Construction Costs	**$ 1,500,000**
Year of Construction Estimate	2013			
Mid-Point of Construction	2016		Escalation Costs	$139,000
Escalation Rate	3.0%			
			Total Construction Costs	**$ 1,640,000**
Summary of Engineering Fees				
Engineering - Predesign	4.0%			$66,000
Engineering - Design & Bidding Services	8.0%			$131,000
Engineering - Construction	4.0%			$66,000
Resident Engineering	4.0%			$66,000
Post Construction Phase	2.0%			$33,000
Total Percentage	22.0%			
			Total Engineering Costs	**$360,000**
Summary of Administrative Costs				
Control System (included)	0.0%			$0
Land Acquisition	0.0%			$0
City Purchased Equipment	0.0%			$0
Miscellaneous	1.5%			$25,000
Material Testing	0.5%			$8,000
Total Percentage	2.0%			
			Total Administrative Costs	**$33,000**
Summary of Contractor Markups				
Overhead and Profit	9.0%			$148,000
General Conditions	10.0%			$164,000
Start-Up and Training	1.0%			$16,000
Insurance	2.0%			$33,000
Bonds	1.5%			$25,000
Total Percentage	23.5%			
			Total Administrative Costs	**$390,000**
			Total Costs	$ 2,423,000
Contingency	35.0%			$850,000
			Total Project Cost Estimate	**$ 3,300,000**

Project: City of Boulder Betasso WTF Residuals Study
Date: 12/3/2013
By: Jamie Eichenberger
Class: 5 (Planning-Level)

Total Project Cost Estimate (TPCE) Summary Sheet

Description	#	Units	Unit Cost	Total Cost
Summary of Construction Costs				
Equalization Tank	200	CY	$ 750	$ 150,000
Centrifuge	1	EA	$ 360,000	$ 360,000
Polymer Feed System	1	EA	$ 25,000	$ 25,000
Sludge Conveyors	1	EA	$ 50,000	$ 50,000
Building	750	SF	$ 250	$ 188,000
EI&C	15%	LS		$ 120,000
Site Work	1	LS	$ 50,000	$ 50,000
			Subtotal Construction Costs	**$ 900,000**
Year of Construction Estimate	2013			
Mid-Point of Construction	2016		Escalation Costs	$ 83,000
Escalation Rate	3.0%			
			Total Construction Costs	**$ 980,000**
Summary of Engineering Fees				
Engineering - Predesign	4.0%			$39,000
Engineering - Design & Bidding Services	8.0%			$78,000
Engineering - Construction	4.0%			$39,000
Resident Engineering	4.0%			$39,000
Post Construction Phase	2.0%			$20,000
Total Percentage	22.0%			
			Total Engineering Costs	**$220,000**
Summary of Administrative Costs				
Control System (included)	0.0%			$0
Land Acquisition	0.0%			$0
City Purchased Equipment	0.0%			$0
Miscellaneous	1.5%			$15,000
Material Testing	0.5%			$5,000
Total Percentage	2.0%			
			Total Administrative Costs	**$20,000**
Summary of Contractor Markups				
Overhead and Profit	9.0%			$88,000
General Conditions	10.0%			$98,000
Start-Up and Training	1.0%			$10,000
Insurance	2.0%			$20,000
Bonds	1.5%			$15,000
Total Percentage	23.5%			
			Total Administrative Costs	**$230,000**
			Total Costs	$ 1,450,000
Contingency	35.0%			$510,000
			Total Project Cost Estimate	**$ 2,000,000**

Project: City of Boulder Betasso WTF Residuals Study
Date: 12/3/2013
By: Jamie Eichenberger
Class: 5 (Planning-Level)

Total Project Cost Estimate (TPCE) Summary Sheet

Description	#	Units	Unit Cost	Total Cost
Summary of Construction Costs				
Equalization Tank	200	CY	$ 750	$ 150,000
Screw Press	1	EA	$ 350,000	$ 350,000
Polymer Feed System	1	EA	$ 25,000	$ 25,000
Sludge Conveyors	1	EA	$ 50,000	$ 50,000
Building	1,040	SF	$ 250	$ 260,000
EI&C	15%	LS		$ 130,000
Site Work	1	LS	$ 50,000	$ 50,000
			Subtotal Construction Costs	**$ 1,000,000**
Year of Construction Estimate	2013			
Mid-Point of Construction	2016		Escalation Costs	$ 93,000
Escalation Rate	3.0%			
			Total Construction Costs	**$ 1,090,000**
Summary of Engineering Fees				
Engineering - Predesign	4.0%			$44,000
Engineering - Design & Bidding Services	8.0%			$87,000
Engineering - Construction	4.0%			$44,000
Resident Engineering	4.0%			$44,000
Post Construction Phase	2.0%			$22,000
Total Percentage	22.0%			
			Total Engineering Costs	**$240,000**
Summary of Administrative Costs				
Control System (included)	0.0%			$0
Land Acquisition	0.0%			$0
City Purchased Equipment	0.0%			$0
Miscellaneous	1.5%			$16,000
Material Testing	0.5%			$5,000
Total Percentage	2.0%			
			Total Administrative Costs	**$21,000**
Summary of Contractor Markups				
Overhead and Profit	9.0%			$98,000
General Conditions	10.0%			$109,000
Start-Up and Training	1.0%			$11,000
Insurance	2.0%			$22,000
Bonds	1.5%			$16,000
Total Percentage	23.5%			
			Total Administrative Costs	**$260,000**
			Total Costs	$ 1,611,000
Contingency	35.0%			$560,000
			Total Project Cost Estimate	**$ 2,200,000**

Project: City of Boulder Betasso WTF Residuals Study
Date: 12/3/2013
By: Jamie Eichenberger
Class: 5 (Planning-Level)

Total Project Cost Estimate (TPCE) Summary Sheet

Description	#	Units	Unit Cost	Total Cost
Summary of Construction Costs				
Equalization Tank	200	CY	$ 750	$ 150,000
Belt Filter Press	1	EA	$ 290,000	$ 290,000
Polymer Feed System	1	EA	$ 25,000	$ 25,000
Sludge Conveyors	1	EA	$ 50,000	$ 50,000
Building	1,000	SF	$ 250	$ 250,000
EI&C	15%	LS		$ 110,000
Site Work	1	LS	$ 50,000	$ 50,000
			Subtotal Construction Costs	**$ 900,000**
Year of Construction Estimate	2013			
Mid-Point of Construction	2016		Escalation Costs	$ 83,000
Escalation Rate	3.0%			
			Total Construction Costs	**$ 980,000**
Summary of Engineering Fees				
Engineering - Predesign	4.0%			$39,000
Engineering - Design & Bidding Services	8.0%			$78,000
Engineering - Construction	4.0%			$39,000
Resident Engineering	4.0%			$39,000
Post Construction Phase	2.0%			$20,000
Total Percentage	22.0%			
			Total Engineering Costs	**$220,000**
Summary of Administrative Costs				
Control System (included)	0.0%			$0
Land Acquisition	0.0%			$0
City Purchased Equipment	0.0%			$0
Miscellaneous	1.5%			$15,000
Material Testing	0.5%			$5,000
Total Percentage	2.0%			
			Total Administrative Costs	**$20,000**
Summary of Contractor Markups				
Overhead and Profit	9.0%			$88,000
General Conditions	10.0%			$98,000
Start-Up and Training	1.0%			$10,000
Insurance	2.0%			$20,000
Bonds	1.5%			$15,000
Total Percentage	23.5%			
			Total Administrative Costs	**$230,000**
			Total Costs	$ 1,450,000
Contingency	35.0%			$510,000
			Total Project Cost Estimate	**$ 2,000,000**

Appendix F: TM3 Summary of Results for Thickening and Dewatering Pilots

Brown AND Caldwell

1697 Cole Blvd., Suite 200
Golden, CO 80401
Tel: 303-239-5400
Fax: 303-239-5454

Technical Memorandum

Prepared for: City of Boulder

Project Title: Betasso Water Treatment Facility Residuals Study

Project No: 144528

Technical Memorandum [No. 3]

Subject: Summary of Results for Thickening and Dewatering Pilots

Date: June 23, 2014

To: Steve Buckbee, Utilities Project Manager

From: Sean O'Connell, Project Manager

Copy to: Project Team

Prepared by: _____
Tony VanHaverbeke, Project Engineer

Reviewed by: _____
Sean O'Connell, Project Manager

Limitations:

This document was prepared solely for City of Boulder in accordance with professional standards at the time the services were performed and in accordance with the contract between City of Boulder and Brown and Caldwell dated June 4, 2013. This document is governed by the specific scope of work authorized by City of Boulder; it is not intended to be relied upon by any other party except for regulatory authorities contemplated by the scope of work. We have relied on information or instructions provided by City of Boulder and other parties and, unless otherwise expressly indicated, have made no independent investigation as to the validity, completeness, or accuracy of such information.

Table of Contents

List of Figures ii
List of Tables ii
1. Background 1
2. Piloting Technologies 2
2.1 Gravity Belt Thickener Piloting 2
2.2 Rotary Drum Thickener Piloting 3
2.3 Screw Press Piloting 4
2.4 Dissolved Air Floatation Thickener Piloting 4
2.5 Belt Filter Press Dewatering Piloting 5
3. Summary and Full Scale Considerations 6
3.1 Thickened Sludge Conveyance 7
3.2 Automated Polymer Dosing 7
4. Recommendations 8
Attachment A: Betasso Piloting Protocol ..... A
Attachment B: BDP GBT and BFP Piloting Report ..... B
Attachment C: FKC RDT and Screw Press Piloting Report C
Attachment D: WWW DAFT Piloting Report ..... D
Attachment E: Hach Automated Polymer Dosing System ..... E
Attachment F: Opinions of Probable Project Cost ..... F

List of Figures

Figure 1: Frac Tank Installed 1
Figure 2: GBT and Belt Filter Press Pilot Trailer 2
Figure 3: RDT and Screw Press Pilot Trailer 3
Figure 4: DAFT Pilot with Thickening Beach 5

List of Tables

Table 2-1. Gravity Belt Thickener Pilot Results 2
Table 2-2. Rotary Drum Thickener Pilot Results 3
Table 2-3. Screw Press Pilot Results 4
Table 2-4. Dissolved Air Floatation Thickener Pilot Results 5
Table 2-5. Belt Filter Press Pilot Results 6
Table 3-1. Viable Thickening Technology Comparison 6
Table 3-2. Thickening Alternative Cost Evaluation 7

1. Background

Following the findings of TM2, three thickening technologies were selected for pilot testing at the Betasso Water Treatment Facility (WTF). The three technologies were a gravity belt thickener (GBT) provided by BDP Industries, a rotary drum thickener (RDT) provided by FKC, and a dissolved air floatation thickener (DAFT) provided by World Water Works (WWW). In addition to the thickening technologies, two of the manufacturers also brought dewatering technologies as part of their pilot trailer. BDP brought a belt filter press in addition to their GBT, and FKC brought a screw press in addition to their RDT. Each manufacturer was provided 5 days on site to connect their pilot unit, perform pilot testing, and move the unit off-site. Each manufacturer also provided a pilot operator to handle the installation, operation, sampling, and removal of the pilot unit. All polymers used were certified to NSF/ANSI Standard 060 – Drinking Water Treatment Chemicals – Health Effects, and were selected through bench-scale testing by the manufacturer or manufacturer's subcontractor. Throughout piloting the WTF was operated under normal conditions, which meant that residuals were drained from one of the four sedimentation basins daily. In addition, flows were also captured from the DAFT and oil/water separator. In total, approximately 11,000 gallons of dilute solids was produced each day.

Figure 1: Frac Tank Installed

Equalization (EQ) of the residuals was handled with an 18,000 gallon mix tank provided by Baker Corp. The tank was placed at the south end of the drying beds just east of the control panel and was connected to the sludge discharge of the East Drying Bed using 4-inch pipe and hose with Bauer connections. The equalization tank was equipped with four paddle mixers that served to keep the residuals mixed and in in suspension. Tank levels were controlled by the facility operations staff. Efforts were made to ensure that the tank contained fresh residuals and that the WTF polymer feed system was not running when filling the tank. Pilot units were connected to the EQ tank via a 4-inch camlock at the bottom of the tank.

Sampling was performed by the pilot operators in accordance with the piloting protocol (Attachment A). The collected samples were given to the WTF operators for analysis using their CEM Smart Turbo microwave solids analyzer which was purchased and installed in the Betasso WTF laboratory just prior to the start of piloting. Early on in piloting there were some inconsistencies in analysis results, but other than these isolated irregularities, the results generally appeared to be accurate. Many of the results were checked for accuracy by comparing them to results produced by the manufacturers, as well as a number of samples that were analyzed at the 75th Street Wastewater Treatment Facility.

2. Piloting Technologies

2.1 Gravity Belt Thickener Piloting

The GBT provided by BDP was the first pilot and was scheduled to be onsite from May 12th to May 16th. Snow prevented the trailer from being transported to the facility until May 13th. This had no material impact on piloting as setup and installation went faster than expected. The pilot unit was operated by Robert Dominico from BDP. BDP's Pilot unit consisted of a 1.0 meter model XL GBT which can handle a maximum flow rate of 200 gpm. This unit is not a true pilot unit, but rather a truck-mounted full-size unit. Due to the unit's large capacity, fewer samples could be taken each day before running out of residuals in the EQ tank. The GBT was tested under three different flow rates in order to demonstrate its ability to perform under a wide variety of operating conditions. These flows were 80 gpm, 100 gpm, and 180 gpm. BDP utilized the Hychem AF306 polymer for flocculation.

Figure 2: GBT and Belt Filter Press Pilot Trailer

Throughout GBT piloting, solids concentration of residuals within the EQ tank remained consistently between 0.8% and 1.0%. Overall the GBT performed very well and very consistently. Capture rate throughout all piloting was greater than 95%. Table 2-1 summarizes the average performance characteristics of the GBT under the three tested flow rates.

Table 2-1. Gravity Belt Thickener Pilot Results

Flow Rate (GPM)	Loading Rate (Dry Ton/hr.)	Polymer Dosage (lbs./dry ton)	Thickened Solids Content
80	0.17	8.5	6.8%
100	0.23	7.8	6.5%
180	0.39	8.3	4.6%

In TM1 it was calculated that minimum thickened sludge concentration of 4% delivered to the drying beds would be required to meet the existing operational needs of the facility. Based on these results a GBT should be a good candidate for mechanical thickening and appears to be capable of consistently delivering thickened solids concentrations greater than 6% under the flow rates likely to be seen at the Betasso WTF.

BDP has indicated that a 0.5-meter GBT would be capable of handling WTF flows up to 35 mgd but would not be adequate for facility flows at 50 mgd. For this reason BDP has recommended a single 0.75-meter GBT to meet both current and future conditions. For additional details on GBT pilot testing and the recommendations for full scale implementation see the BDP report in Attachment B.

2.2 Rotary Drum Thickener Piloting

The RDT provided by FKC was the second mechanical thickening technology tested. The unit was on site from May 19th to May 23rd and was operated by Shane Harvey with FKC. Piloting was performed using a pilot thickener model FKC RST-315x1000, which has a capacity of approximately 8 gpm. Polymer was added to the sludge via a two-stage flocculation tank. Due to the small size of the pilot, there were a limited number of flow rates that could be tested in the unit. FKC has assured us that full-scale units can be accurately sized based on this pilot unit and that it will be capable of performing under a variety of flows. The flow rate into the pilot RDT ranged from 3.5 gpm to 4.7gpm.

Figure 3: RDT and Screw Press Pilot Trailer

Throughout RDT piloting solids concentration of residuals within the EQ tank remained consistently between 0.8% and 1.0%. Overall the RDT performed very consistently, not deviating more than 1.4% throughout all testing. Table 2-2 summarizes the average performance characteristics of the RDT.

Table 2-2. Rotary Drum Thickener Pilot Results

Flow Rate (GPM)	Loading Rate (Dry Ton/hr.)	Polymer Dosage (lbs./dry ton)	Thickened Solids Content
3.5	16.5	14.6	4.5%
4.4	19.9	12.9	3.7%

Overall performance of the RDT during piloting was fair. While the residuals appeared to react with the polymer very well, forming good flocs, the flocs remained very fragile and tended to shear rather than drain in the tumbling action of the RDT. There was concern that the flocs were so fragile that it would not be feasible to send them to another unit for further dewatering after being thickened in the RDT, if necessary. In addition to the marginal thickening performance, the RDT also required significantly more polymer than the

GBT to produce those results. While the unit was able to achieve the necessary minimum solids concentration of 4% to meet Betasso's current needs it was not able to do this consistently. Because of this, BC is not recommending that an RDT be used for mechanical thickening at the Betasso WTF. More information on the RDT pilot testing can be found in Attachment C.

2.3 Screw Press Piloting

Due to the marginal performance of the RDT, FKC decided to attempt to thicken the residuals by feeding the screw press directly from the floc tank. Conventionally, a screw press would be fed thickened sludge that would then be dewatered to produce cake. In this application no pre-thickening was done before the residuals were delivered to the screw press. Instead the screw press was operated to emulate a screw thickener. To achieve optimal results, the screw press had to be run at a very low flow rate in order to allow the flocs to drain in the early stage of the screw press. This allowed the flocs to stick together and be pressed in later stages of the press. Table 2-3 summarizes the average performance characteristics of the screw press.

Table 2-3. Screw Press Pilot Results

Flow Rate (GPM)	Loading Rate (Dry Ton/hr.)	Polymer Dosage (lbs./dry ton)	Thickened Solids Content
2.1	9.4	15.1	9.1%

The overall performance of the screw press was very promising. Polymer usage was similar to that of the RDT, and capture rate was better than 95%. FKC has indicated that the key to good performance of the screw press in this application is allowing the flocs to drain enough in the early stages of the screw so that they stick together and can be pressed in the later stages without breaking apart or being forced though the screen. During the pilot this was done by running the unit very slowly, but at full scale this could be done by lengthening the screw. While more testing would be prudent due to the limited amount of data collected, these results indicate that a screw press will likely be capable of meeting both current and future residuals thickening needs at the Betasso WTF and should be considered candidates for full-scale application. Additional information on the screw press can be found in Attachment C.

2.4 Dissolved Air Floatation Thickener Piloting

The DAFT unit provided by WWW was the third and final pilot unit on site. The unit was on site from May 27th to May 30th and was operated by Scott Poe from WWW. Piloting was performed with a ROP-5 DAF System w/Sludge Thickening Beach, which is capable of handling a maximum flow rate of 5 gpm. This unit is unique from most other DAFTs in that it has an additional sludge thickening beach consisting of a wedgewire screen with press section. This added thickening beach is designed to provide additional dewatering by allowing free water to drain from the float. For this pilot WWW hired Chemtreat to come out to Betasso and perform jar testing for them. The selected Polymer was Chemtreat P835E which was added using a flocculant batch tank and feed system. Solids concentration in the equalization tank during piloting ranged from 0.8% to 1.2%.

Throughout piloting the DAFT pilot unit struggled to perform consistently, and was unable to produce thickened sludge concentrations greater than 3.4% from the DAFT and 3.6% after the thickening beach. WWW believes that a number of factors contributed to these difficulties. First, the feed residuals concentration was higher than they had expected which resulted in an Air to Solids ratio much lower than what is needed for good thickening. Second, chemical mixing proved to be challenging on the pilot unit. Additionally, the flocs that were formed appeared to be more frail than were observed on all of the other pilot units. The results of the pilot testing can be seen in Table 2-4.

Figure 4: DAFT Pilot with Thickening Beach

Table 2-4. Dissolved Air Floatation Thickener Pilot Results			
Flow Rate (GPM)	Loading Rate (Dry Ton/hr)	Polymer Dosage (lbs/dry ton)	Thickened Solids Content
3.0	0.008	14.7	3.5%
5.0	0.012	20.1	3.2%
8.0	0.017	18.6	3.1%

While WWW believes that performance could be enhanced by using a larger dissolved air pump and performing more jar testing with a full-scale unit, BC is of the opinion that better candidates exist for residuals thickening under current flows. In TM 2 it was suggested that the DAFT would produce thickened sludge concentrations between 2.5 and 4.5%. Even if it were able to produce 4.5% sludge the DAFT is still outperformed by other technologies and the DAFT thickening beach did not appear to be capable of making up for this difference. It would appear unlikely that even an optimized DAFT would be capable of producing thickened sludge concentrations of 6% needed for future facility flows approaching 50 mgd. For these reasons a DAFT is not being considered as a final candidate for full scale thickening at the Betasso WTF. For more information on the DAFT pilot refer to Attachment D.

2.5 Belt Filter Press Dewatering Piloting

In addition to the GBT discussed in section 2.1, BDP also had a 1.0 meter Belt Filter Press on the piloting trailer which was operated to provide performance data on this dewatering technology. The belt filter press was fed thickened solids from the GBT. Some of the initial data for the cake solids were inaccurate and were omitted. Table 2-5 summarizes the average performance characteristics of the Belt Filter Press.

Table 2-5. Belt Filter Press Pilot Results			
Flow Rate (GPM)	Loading Rate (Dry Ton/hr)	Polymer Dosage* (lbs/dry ton)	Thickened Solids Content
100	0.23	7.8	16.3%
180	0.39	8.3	16.0%
*Polymer was only added at the GBT. No additional Polymer was added for the BFP.			

The belt filter press proved effective in dewatering the thickened solids from the GBT and is a viable option for full-scale dewatering. In addition, the BDP GBT used for thickening can easily be converted to a belt filter press by adding a pressure section.

3. Summary and Full Scale Considerations

In TM1 it was shown that increasing the solids concentration to at least 4% before application to the existing drying beds and lagoons would be sufficient for WTF flows up to 35 mgd. As flows increase to a rated capacity of 50 mgd solids concentration to the drying beds and lagoons would have to increase to at least 6%. Of the pilot units that were tested, only the GBT and screw press were shown to be capable of consistently producing thickened sludge above 6%.

On an annual basis, this will allow for more reserve volume to be available in the lagoons, and will also allow for the thickened residuals to be hauled off-site as a solid rather than a liquid. A performance comparison of the screw press to the GBT shows that while the screw press is able to achieve a much higher thickened sludge concentration, 9.1% compared to 6.5%, that it requires 87% more polymer to do so. TM 2 however, showed that polymer usage played a small part in the total annual cost when compared to O&M and hauling. The screw press is also expected to require significantly more power to operate but like polymer, it plays a relatively small role in the overall annual costs. Table 3-1 shows a comparison of these costs along with performance information and qualitative factors.

Table 3-1. Viable Thickening Technology Comparison				
Parameter	GBT	Screw Press	RDT	DAFT
Strengths[1]	Easy to operate	Enclosed operation	Easy to operate	Easy to operate with varying solids loads
Weaknesses[1]	Does not achieve as high of solids concentrations as screw press	Limited usage as a thickener	Limited usage with alum sludges	High power consumption
Solids Capture[2]	>95%	>95%	>92%	>95%
Thickened Sludge Concentration[2]	6.5%	9.1%	4.5%	3.5%
Polymer Dosage (lbs/dry ton)[2]	8.2	15.1	14.6	14.7
Safety[1]	High	High	High	High
Reliability[1]	High	High	High	High
Hauled Lagoon Concentration	>15%	>15%	<6%	<6%
1. Data from TM2 *2. Data From Onsite Piloting*				

Table 3-2 presents a synthesis of costs for each of the alternatives derived from manufacturers proposals and calculated based on proposed loading rates and utility requirements. Capital costs are based on the sum of equipment costs and estimated building costs. Annual O&M costs were developed for each equipment alternative based on polymer use, power use, person-hours, and hauling fees. A 15-year lifecycle cost was calculated based on the sum of the annual costs for each alternative.

Table 3-2. Thickening Alternative Cost Evaluation				
Estimated Total Project Cost[2]	$2,600,000	$2,600,000	N/A[5]	N/A[5]
Thickening Unit Capital Cost[1,6]	$159,300	$176,000	$64,910	N/A[5]
Total O&M Lifecycle Cost[4]	$1,861,695	$1,898,355	N/A[5]	N/A[5]
Annual Power Cost[1]	$1,130	$1,938	$1,135	N/A[5]
Relative Annual Polymer Cost[1]	$3,239	$5,969	$5,792	$5,820
Annual Maintenance Cost[1,7]	$5,494	$4,400	N/A[5]	N/A[5]
Annual Operating Cost[3]	$41,600	$41,600	$41,600	$31,200
Annual Sludge Hauling Cost	$72,650	$72,650	$181,625	$181,625

1. Data Supplied by equipment mfr.
2. See Attachment F for more detail.
3. Assuming 5 days a week and $40/hour labor.
4. Assuming a 15-year lifecycle.
5. Because the technology was not found to be a viable solution the mfr. elected to not provide cost info.
6. Price reflects that of the thickener, floc tank, and polymer system.
7. Cost reflects parts and labor required for maintenance

3.1 Thickened Sludge Conveyance

When comparing the data on the GBT and screw press it is immediately apparent that the screw press provides superior thickening performance, producing thickened sludge in excess of 9% solids. While this superior thickening performance of the screw press may be a distinct advantage from a sludge volume standpoint, it also produces some unique challenges as well. The solids concentration limit for liquid pumping is generally around 6%. At concentrations beyond 6% the sludge begins to lose its Newtonian fluid properties and it begins to behave like a pseudoplastic fluid. While it is true that thickened alum sludges tend to pump more easily than waste activated sludge, at 9% the sludge will have a consistency similar to that of thick pancake batter and cake pumping is typically required. Pumping sludge at 9% can be done, but typically uses positive displacement pumps, and pumping distances should be limited to keep pressures down. One possible solution to address the conveyance challenges would be to locate the thickener relatively close to the drying beds; thereby reducing the distance the pumping would be required. At 9% the thickened sludge is not stackable and will therefore flow evenly once in the drying bed. Another alternative would be to run the screw press faster so that only 6% solids is achieved.

3.2 Automated Polymer Dosing

One of the common complaints with the operation of mechanical thickening equipment is that they require regular attention from operations staff to adjust polymer dosage to reflect changes in sludge composition. This is often of particular concern with GBTs since they are not enclosed, but instrumentation and automation systems are getting better at addressing this issue. One such system is the Hach RTC113 ST Module which continuously monitors influent TSS, feed flow rate, and thickened sludge concentration. Using these signals in a feedback loop, it adjusts polymer dosage to achieve a target thickened sludge concentration.

An automated polymer dosing system has the potential to provide benefit in a number of different areas. First, it should effectively free up operators from attending the thickening unit and allow them to focus on more pressing WTF activities. In addition to saving time it is likely save on polymer due to the human habit of “playing it safe” and overdosing. Lastly it would allow for more precise control over the thickened solids concentration that is entering the drying beds. This is not only important from a volume standpoint but it also

ensures that the sludge concentration stays within the sludge pumping system design parameters. More information on this system can be found in Attachment E.

4. Recommendations

From a quantitative perspective both the GBT and screw press are viable options. Both are capable of meeting sludge concentrations to allow hauling dry solids annually. In addition, both units have very similar capital and lifecycle O&M costs. Looking deeper into the qualitative factors, however, shows that the GBT is the preferred technology compared to a screw press.

Screw presses are typically used as a dewatering technology to dewater sludge that has already been thickened. Typical operation of the screw press had to be modified dramatically in order to achieve good results during piloting. Furthermore, screw presses have not been commonly used to thicken alum sludge by feeding unthickened sludge directly to the screw press. Due to limited operational history in water treatment facilities, and the unique operation of the screw press that would be required, there are concerns that this technology will not be capable of performing consistently and reliably under normal plant operation. These concerns are escalated when considering the potential for process changes in the future, such as converting to a different coagulant.

In contrast, gravity belt thickeners have a proven track record with thickening a variety of sludges across the country. GBTs are significantly more common than screw presses in both water and wastewater applications. This, combined with the simplicity of operation of the GBT, make the GBT the recommended choice for residuals thickening at the Betasso WTF. The GBT is the preferred technology for meeting the operational needs of the Betasso WTF and its staff.

Attachment A: Betasso Piloting Protocol

Objective

As presented in Technical Memorandums No. 1 and No. 2, the existing residuals handling facilities at the Betasso WTF are inadequate to meet current and future annual sludge production storage requirements. Additional thickening now and potentially future dewatering will be required as described in Technical Memorandum. Thickening to reduce water volume will be implemented in the near future to maximize the use of the existing lagoons and drying beds. Thickening would be needed as the precursor to mechanical dewatering so the process will not become a wasted investment in the future. The design goal for thickening at the Betasso WTF is to achieve thickened sludge concentrations as high as possible while still maintaining the ability to transport it. As part of this effort, the City of Boulder is soliciting equipment manufacturers to pilot test their equipment to evaluate performance and aid in the selection of a technology for final design. The technologies of interest are:

- Gravity Belt Thickeners
- Rotary Drum Thickeners
- Dissolved Air Flotation Thickeners
- Decanter Centrifuge

Section 1: Background

The Betasso Water Treatment Facility is the primary water treatment facility serving the City of Boulder and is located west of Boulder near Sugarloaf Mountain. The facility has a current operating flow rate of 35 mgd and planned future improvements would increase the maximum daily capacity to 50 mgd. The existing solids handling system consists of two south lagoons and two concrete lined north drying beds. The combination of the lagoons and drying beds provides a total surface area of 13,728 ft^2 and a total working volume of 411,000 gallons. The Betasso WTF sends on average approximately 11,500 gallons of sludge to the lagoons each day. Under current operation, one of the four sedimentation basins is blown down daily and contributes approximately 9,000 gallons of sludge. Sludge is also collected from backwash equalization basins and the DAF unit. The float from the DAF thickener reaches the lagoons at a concentration of approximately 2 percent solids, while sedimentation basin underflow has typically been at an average solids concentration of approximately 0.2 percent. Annual average total sludge loads to the lagoons ranged from approximately 520 to 735 lb dry solids/d within the period 2008 through 2012. Corresponding annual sludge loads ranged from 95 to 134 dry tons/year.

A recent evaluation indicates that the existing solids handling facilities are inadequately sized to handle the annual sludge production related to an operating flow rate of 35 mgd. To continue to use the existing lagoon/drying bed system at current plant capacity, sludge thickening to at least 4 percent dry solids concentration is required and should be achievable with a thickening process alone based on the bench scale results performed on the plant sludge samples. In order to increase the plant capacity to 50 mgd, the feed solids concentration would have to increase to 6 percent which can likely be achieved with the addition of dewatering equipment in the future.

The desired standard operating regime of new mechanical sludge thickening and dewatering facilities is no more than 7 hours per day and 5 days per week. For periods when the plant is operating at peak capacity it is feasible for thickening and dewatering operations assumed to extend for 7 days if required.

Betasso WTF Design Parameters	
Current Facility Operating Flow	35 mgd
Average Daily Sludge Volume*	11,600 gallons
Average Daily Sed Basin Underflow Volume*	9,300 gallons
Average Daily Backwash EQ Tank Sludge Volume*	1900 gallons
Average Daily DAF Float Volume*	400 gallons
Sed. Basin Underflow Solids Concentration	0.2%
DAF Float Solids Concentration	2.0%
Annual Average Sludge Production	830 lbs dry solids/day
Max Day Sludge Production	3,400 lbs/day
Min Day Sludge Production	240 lbs/day
Expected Sludge Concentration Before Thickening	0.2%
Raw Water Turbidity	0.4 - 8.0 NTU (1NTU average)
Sludge Composition	31% Raw Water, 46% alum, 23% PACL

**Based on facility sludge flow data from 11/19/2012 -5/31/2013*

Section 2: Pilot Testing Services

Each equipment manufacturer will have a period of five days, including time needed for set-up, optimization, analytical testing, and demobilization to complete pilot testing. The equipment manufacturer shall have an operator on-site for the duration of the testing to operate the pilot unit and take samples. Testing will be performed from Monday through Friday or as long as required to obtain adequate results. Site access will be granted on Monday morning. Pilot units will need to be unloaded or parked in a dirt area next to the north drying beds.

To facilitate pilot testing the City of Boulder will provide the following:

- Roughly 11,000 gallons of sludge/day
- 18,100 gallon tank for equalization with mixing and 4” camlock connection for feed
- 480V 3 Phase 150A Meltric DR-150 Receptacle
- Potable Water at 50gpm 40psi via 2” camlock fitting
- Analytical Testing of up to 10 sample sets per day. Each sample set will consist of
    - Feed Sample % Total Suspended Solids
    - Separated Liquid Sample % Total Suspended Solids
    - Solids Sample % Total Solids (taken simultaneously with liquid sample)

Additional sample analysis may be run based on recommendations of the pilot manufacturer.

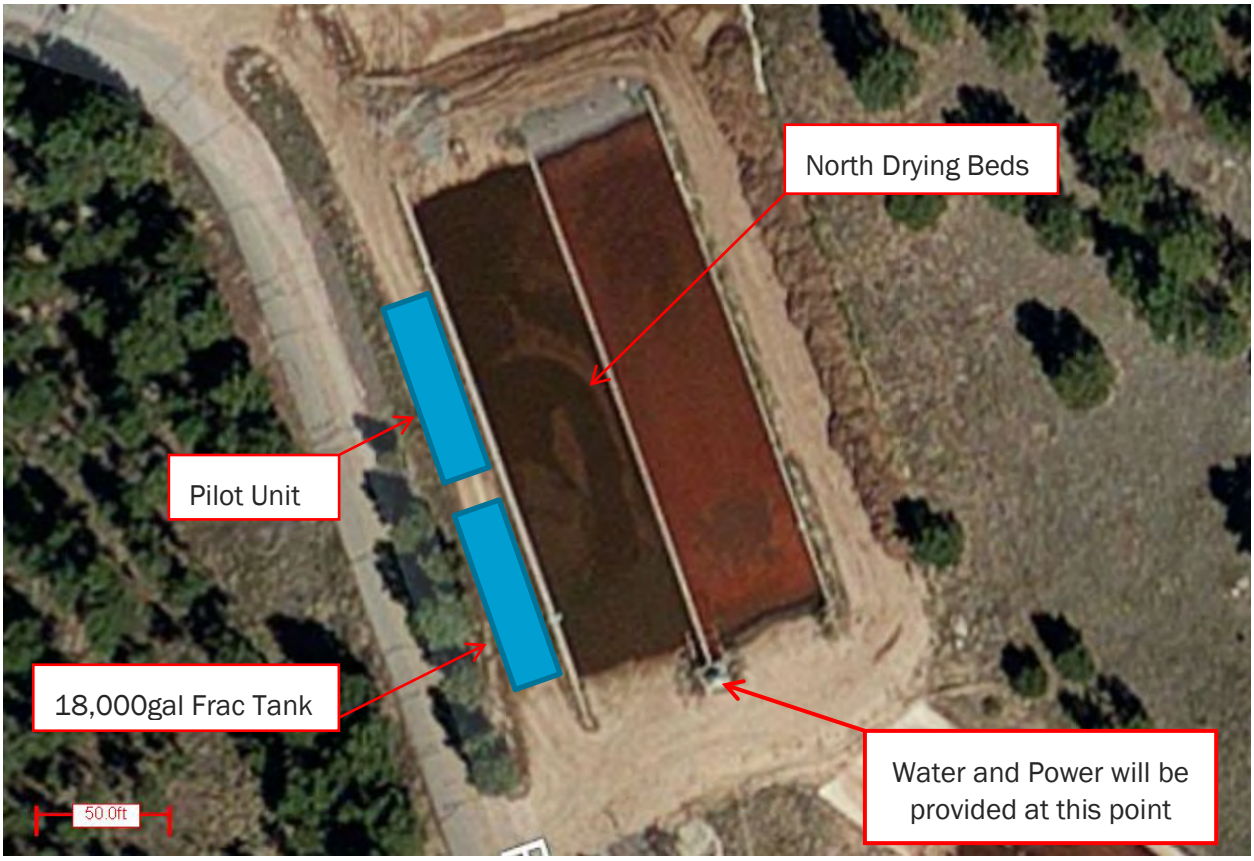

Figure 1: Piloting Site Layout

Each Manufacturer will be responsible for providing all equipment, chemicals, personnel, and consumables needed to successfully complete all phases of testing. This may include but is not limited to the following:

- Staffing for set-up, operation and demobilization of the test unit
- Trailer or skid-mounted equipment with all necessary supporting equipment
- Forklift for unloading and loading a skid
- Cribbing for leveling the unit
- Electrician with appropriate Meltric DR-150 plug and wire
- Hoses and fittings for feed sludge and wash water
- Conveyance system for thickened sludge and separated liquid to reach adjacent lagoon
- Pumps for sludge feed and chemical feed, water booster pumps,
- NSF Polymer with Equipment for batching of polymer, including mixing and metering
- Ancillary equipment for control of equipment operation, including flow meters
- Personnel to perform sampling and provide sampling containers
- List of ancillary/support system requests to be provided by the City of Boulder at least 2 weeks prior to arriving on-site.

Manufacturers should also take weather into consideration and the possible implications it presents to piloting and the pilot unit. Piloting is planned for April and May of 2014. Weather during this time of the year can be unpredictable and can change rapidly. High winds, severe thunderstorms and snow as late as May is common. Manufacturers should take measures to protect pilot units from possible power outages, surges, and brownouts as well as possible cold and wet weather. To aid in preparation, the table below shows average climate data for April and May in the City of Boulder.

Average Boulder Weather						
Month	High Temp (°F)	Temp (°F)	Low Temp (°F)	Days w/ Thunderstorms	Days w/Snowfall	Snowfall (in)
April	63	49	36	1.3	4.1	9.0
May	72	58	44	7.8	0.5	1.5

Section 3: Operation and Sampling

Sludge that would have normally been sent to the drying beds will be diverted to an 18,100 gallon frac trailer for equalization. Mixing in the equalization tank will either be integral to the tank or will be provided by an external pump to recirculate the sludge. Only an approximate volume of 11,000 gallons of sludge will be provided for piloting each day. Sludge will be pumped from the equalization tank to the pilot unit through a 4” camlock connection. Thickened sludge and separated liquid will need to be discharged into an adjacent drying bed. Pilot units should be tested and sampled under a range of flow rates focusing on current facility production rates and projected sludge production rates at buildout. A table showing current sludge production and possible future production is provided below.

Projected Sludge Production		
Influent Flow	Annual Solids Production	Average Sludge Production
Today	152,205 lbs/yr	10,000 gpd
Current[1]	244,390 lbs/yr	16,057 gpd
35 mgd[1]	303,190 lbs/yr	19,920 gpd
50 mgd[1]	433,130 lbs/yr	28,457 gpd

[1]From TM No. 1, Table 4.2

During pilot operation, the following parameters shall be recorded continuously:

- Date and Time
- Feed flow rate (gpm)
- Wash water flow rate
- Polymer Usage rate (lbs/dry ton)
- Polymer Type
- Power usage rate

The pilot operator will be responsible for taking samples during testing and coordinating with The City of Boulder for timely analysis. Before a sampling campaign can take place, the pilot unit must be allowed to run without any adjustments, at steady state, for a period of 20 minutes. Each sampling campaign must include a feed sample, separated liquid sample, and a thickened solids sample. The time between each sample shall be minimized and all samples shall be clearly labeled with the sample time, date, and type. The corresponding feed flow and polymer usage at the time of sampling shall be presented with the sample results in the final report.

All personnel will be required to follow safety measures and wear appropriate PPE dictated by the situation or by City of Boulder staff. In the event of an emergency or operational issue during piloting, please use the following Emergency Contact List.

Emergency Contact List			
Contact Type	Name	Organization	Phone Number
24hr Piloting	Tony VanHaverbeke Jamie Eichenberger	Brown and Caldwell	303-868-7101 303-884-2551
Betasso WTF	Operator on Duty	City of Boulder	303-413-7350
City of Boulder Utilities After Hours	Utilities Department	City of Boulder	303-441-3245
Betasso WTF Supervisor	Steve Folle	City of Boulder	720-564-2320
Process Optimization Specialist	Niall Stewart	City of Boulder	720-564-2344

Section 4: Manufacturer Analytical Services and Test Report

Upon completion of the pilot testing, each manufacturer will be required to submit a summary report to the City of Boulder describing the testing procedures, results, and recommendations. The report shall be submitted to the City of Boulder within two weeks of testing.

The report shall include the following:

- Summary of pilot testing equipment, set-up, staff, testing period and intervals
- Summary of test runs completed
- Summary of test run results including
    - Feed Flow rate
    - Wash water flow rate
    - Percent solids captured
    - Feed total solids
    - Separated Liquid TSS
    - Thickened sludge concentration
    - Polymer usage in lbs/dry ton
    - Power usage
- All raw data generated during testing with the report
- All field testing notes
- Recommendation of equipment size capable of meeting the design performance criteria listed below. The recommendation shall be based on both theoretical and empirical evidence and supported by calculations to be included in the report. Information on the recommended unit size shall include the following:
    - Solids loading rate
    - Hydraulic loading rate

  - Polymer requirements
  - Estimated polymer usage
  - Power requirements
  - Controls
  - Pricing
  - Supervision requirements
  - Approximate equipment footprint.
- Any other pertinent information that may aid in the selection of thickening technology.

Section 5: Testing Cost/Expenses

The City of Boulder and each equipment manufacturer will agree on a price for completing the pilot testing. The price will be inclusive of all costs including shipping, pilot testing staffing/labor, consumables, and all other direct and indirect costs. Shipping will be to 1094 Betasso Rd. Boulder Colorado.

Attachment B: BDP GBT and BFP Piloting Report

Route 29 Greenwich, New York 12834
Phone No 518-695-6851

BETASSO WTP, BOULDER, COLORADO

GRAVITY BELT THICKENER AND BELT PRESS DEWATERING PILOT TEST REPORT

MAY 12 – 16, 2014
CONDUCTED BY:

ROBERT DOMENICO
BDP INDUSTRIES, INC.

Route 29 Greenwich, New York 12834
Phone No 518-695-6851

TABLE OF CONTENTS

1. EXECUTIVE SUMMARY 3
2. INTRODUCTION 4
3. TEST PROCEDURES 5
4. DISCUSSION OF RESULTS 6
4.1. Thickened Solids Concentration 6
4.2. Polymer Dosage 7
4.3. Capture Rate 8
5. CONCLUSIONS AND RECOMMENDATIONS 9
6. RECOMMENDED GRAVITY BELT THICKENER: 9
7. BUDGET PROPOSAL: 10

Route 29 Greenwich, New York 12834
Phone No 518-695-6851

1. EXECUTIVE SUMMARY

The City of Boulder Colorado's Betasso Water Treatment Plant currently wastes there backwash solids to a storage pond on site. Periodically the plant hires a contract dewatering company to come in and dredge the pond and haul off site. They would like in the future to thicken the solids and liquid land apply. Brown and Caldwell Engineering have been hired to study various thickening options.

BDP Industries was contacted to conduct a pilot study with a 1.0 meter Gravity Belt Thickener / Belt Press. The BDP Industries, model XL Gravity Belt Thickener offers the latest in technology including the up-flow high solids feedbox, Foil Plow and other features. These features are based on over thirty years of experience and ongoing improvements to BDP thickening and dewatering equipment.

As part of this evaluation process, the City of Boulder Betasso WTF requested that BDP perform a mobile demonstration at the facility to examine and document the benefits of the Gravity Belt Thickener and also to determine the dewatering capabilities of the model 3DP Belt Press. A mobile 1.0m Gravity Belt Thickener / 3DP Belt Press unit was tested at the facility to provide performance data for evaluation.

The following parameters were deemed to be of interest in the pilot study:

1. Thickened Solid Concentrations and Belt Press Cake Solids possible at various solids loadings
2. Polymer Dosage
3. Hydraulic Loadings
4. Solids Capture

Performance Demonstrated for the Gravity Belt Thickener and Belt Press were as follows:

Operating Parameter	1 meter Gravity Belt Thickener	1 meter Belt Press
Hydraulic, gpm (Based on 0.79 to 1.09% feed solids)	79 to 180	79 to 180
Dry Solid, lb./hr. per meter	298 to 893	298 to 893
Thickened / Cake Solids, wt. %	5.6 to 8	15.3 to 51.94
Polymer Dosage, lb./ton	7 to 9	9 to 11
Average Capture Rate, %	+95%	+95%

In summary, the pilot test demonstrated that a BDP Industries Gravity Belt Thickener in this application will meet or exceed the customer's desire for high thickened solids concentration. The rugged construction, coupled with a modern and improved GBT design, will provide years of service with minimal maintenance cost. The GBT can also be converted to a Model 3DP Belt Press at any time by adding just the pressure section and producing a stackable cake.

Route 29 Greenwich, New York 12834
Phone No 518-695-6851

2. INTRODUCTION

The test was designed mainly to determine the performance of a Gravity Belt Thickener. BDP was approved to test a model 3DP Belt Press trailer unit consists of a 48-foot trailer with a complete dewatering system. This provided the option of determine Gravity Belt Thickener as well as Belt Press performance. In addition to the GBT / Belt Press, the trailer includes a 10 HP Bornemann progressive cavity sludge feed pump with a Badger magnetic accumulating flow meter on the sludge feed line, Neptune emulsion polymer make down unit, a 10 HP Goulds 3656 shower water booster pump, discharge belt conveyor, and a Nema 4X control panel.

The 3DP unit has many improved features relative to the current belt presses as follows:

- Polymer/Sludge Mixing: The sludge and polymer are blended in a proprietary BDP 316L venturi mixer with polymer injection manifold. The mixer includes an adjustable weight for variable mixing energy and a pressure gauge to monitor mixing energy. The mixer includes a removable side plate for inspection and cleaning. The existing system conditions with a crude in-line injection system with limited mixing.

- Feed Distribution: The 3DP unit includes an industry unique up-flow, high-solids feedbox with a variable speed paddle wheel. The paddle wheel functions similar to a rotary valve, extending feed sludge across the full width of the belt. The speed of the feedbox is operator varied to ensure even distribution across the full width of the belt to maximize cake dryness and belt life. The high solids feedbox is equipped with a 1/3 hp variable speed VFD drive.

- Gravity Zone: The 3DP's independent gravity table at operator level provides more filtration area, smoother sludge transition and better thickening with the furrowing plows. Due to the low elevation, the gravity table is easily observed by the operators allowing them to make easy judgments and assessments of sludge flow, conditioning and distribution. The length of the gravity table can be varied from 6 to 16 feet. The pilot unit has a 10 foot gravity table that performed well at the desired flow rates. The gravity table incorporates an open weave polyester belt for rapid drainage and thickening. The gravity table incorporates both traditional sludge furrowing plows and the BDP full width Excelsior plows to allow free water access to the belt for drainage. The independent gravity section had a 2 HP variable speed AC drive.

- Pressure Section: The pressure section of the 3DP begins with a curved wedge zone to provide gradual low pressure thickening before the vertical s-wrap section. The first s-wrap pressure roller of the 3DP is a perforated, 304 stainless steel roller with internal baffles to eliminate cake rewetting. The pressure section has a total of 8 s-wrap rollers in a vertical orientation that eliminates cake rewetting. Each s-wrap roller has a 304l stainless steel drip pan to direct filtrate away from the belt below. The pressure section belt is typically a tighter weave than the gravity section to allow for squeezing and shearing of the cake without extrusion. The pressure section of the pilot unit has a single 2 HP drive. BDP's current 1.0m 3DP has dual 3 HP variable speed AC drives for the pressure section.

Route 29 Greenwich, New York 12834
Phone No 518-695-6851

- Additional Features: The overall layout of the 3DP results in a gradual upwards flow of the sludge. This improves maintenance and housekeeping since the upper portions of the machine remain dry and clean. The 3DP also incorporates adjustable angle, self-cleaning belt showers that can be supplied via non-potable water systems. The water requirement is 50 GPM per meter at a pressure of 120 PSI. The bearings on the 3DP are Dodge Split Case spherical bearings with closed housings. The bearings are rated for 1,000,000 hours at 7**0 PLI** belt tension. The tensioning and tracking systems are hydraulically actuated and include a power unit with 3-hp motor, 20-gallon stainless steel reservoir and variable displacement pump. Experience has shown hydraulic tensioning/tracking systems to require much less maintenance than pneumatic systems.

3. TEST PROCEDURES

Throughout the four day test, the flexibility and performance of the GBT / 3DP Belt Press was demonstrated at various throughputs, highlighting the flexibility of the GBT / 3DP Belt Press unit. The GBT / 3DP Belt Press is capable of very high flow rates while experiencing only marginal decreases in performance.

The press was stationed by the existing sludge storage ponds and feed from an 11,000 gallon storage tank. The sludge feed was connected to the tank via a 4” hose. A Bornemann sludge feed pump on the mobile trailer was used to pump to the test unit at the various flow rates.

Route 29 Greenwich, New York 12834
Phone No 518-695-6851

4. DISCUSSION OF RESULTS

Process data were collected over the test program, and are shown in table 1 of appendix I.

4.1. Thickened Solids Concentration

Thickened solids concentrations were determined at flow rates ranging from 80gpm up to nearly 200gpm representing solids loadings from 298 to nearly 800lb/hr. Figure 1 below shows the test results:

Figure 1

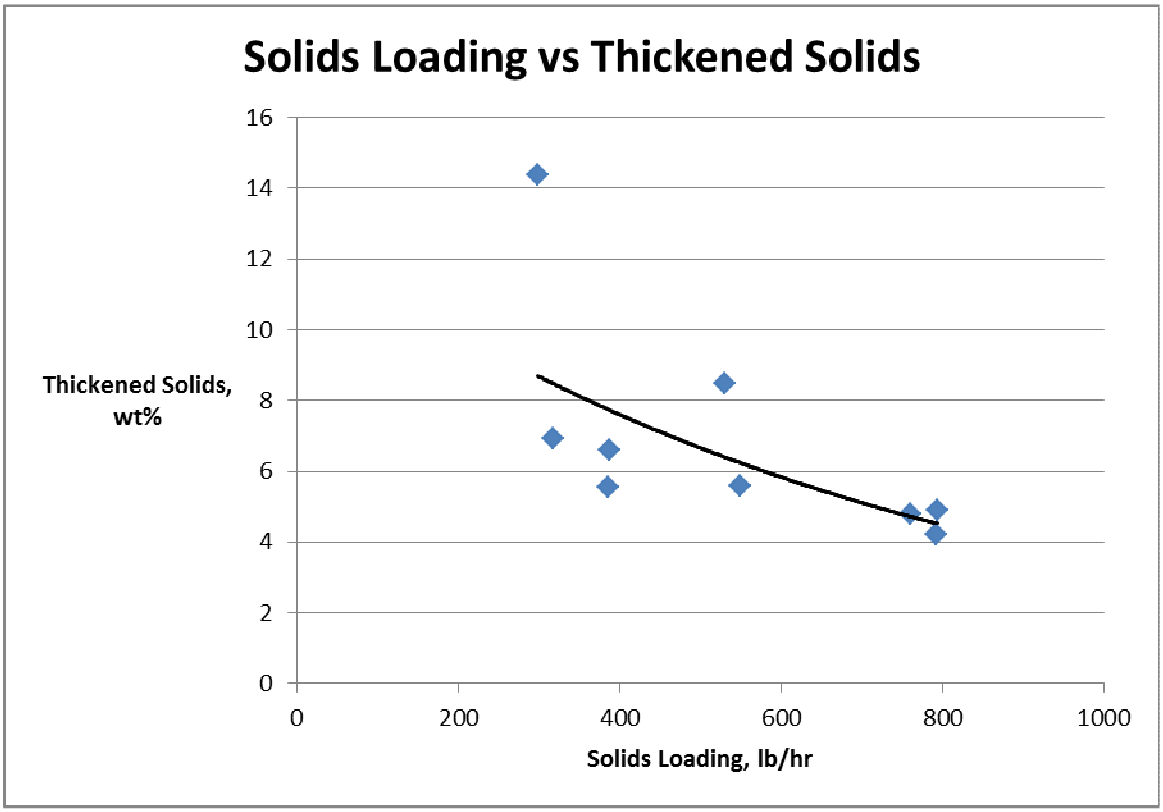

Clearly very high thickened solids concentrations were produced. Discharge cake solids are shown in Figure 2 below. In Figure 1 above the thickened discharge of 14.38wt% doesn't fit the trend line. In Figure 2 below the cake solids of 51.99 and the two plus 30% cake solids don't fit the trend line. When this was pointed out to the laboratory staff at the plant they told us that they doubted their validity as they were just learning how to operate the new instrument on the first day of the testing. Therefore this data for the first day were discounted in the analysis. With the plus 14% data point discarded the thickened solids are expected to be in the range of 7% to 5% depending on the solids loading.

Route 29 Greenwich, New York 12834
Phone No 518-695-6851

Figure 2

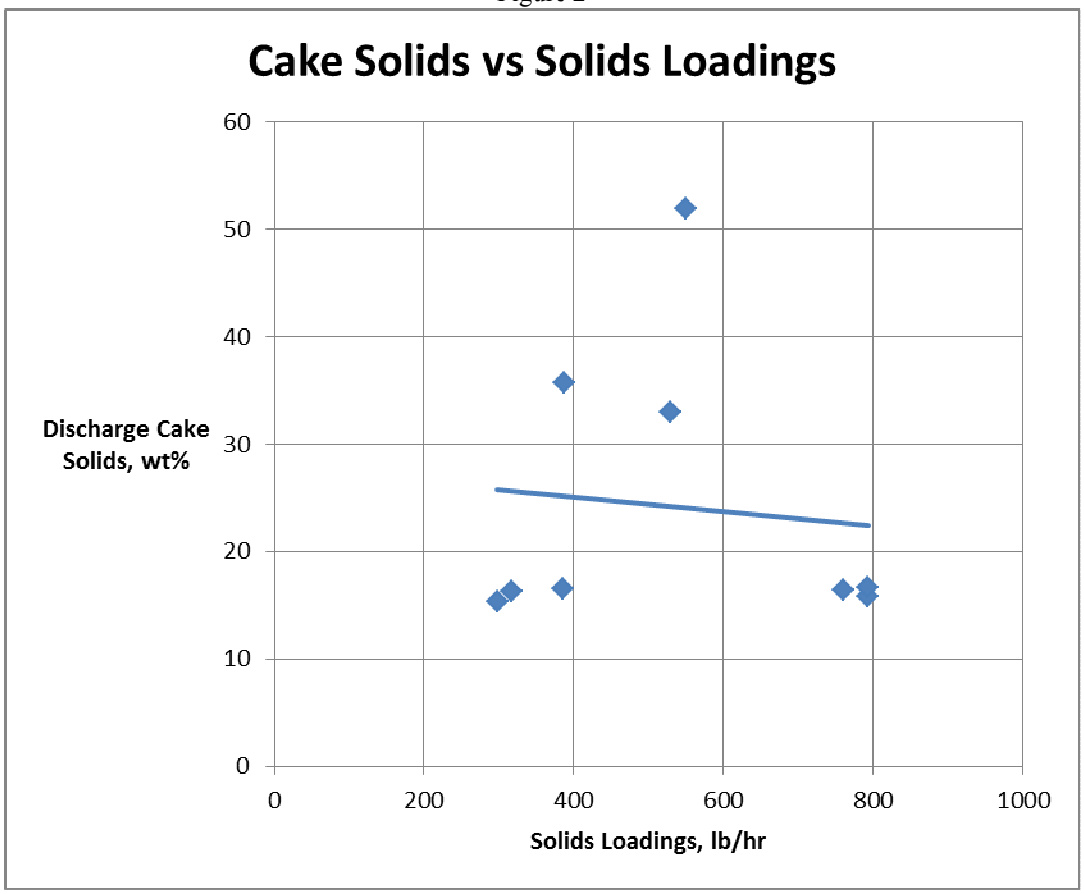

With the three plus 30% data points discharged the cake solids are expected to in the range of 16% in the range of solid loading tested.

4.2. Polymer Dosage

During the pilot testing, the type of polymer, amount of polymer mixing, and amount of polymer per dry ton of sludge were varied to determine the impact on performance. The sludge and polymer reacted most effectively when the polymer was adequately mixed consistent with the product's molecular weight and charge. When mixed properly, the size of the flocculated sludge became small and the filtrate clear. Figure 3 below shows the results. Thickened solids have been plotted verse the solids loading with the range of polymer dosage used shown in the legend.

Figure 3

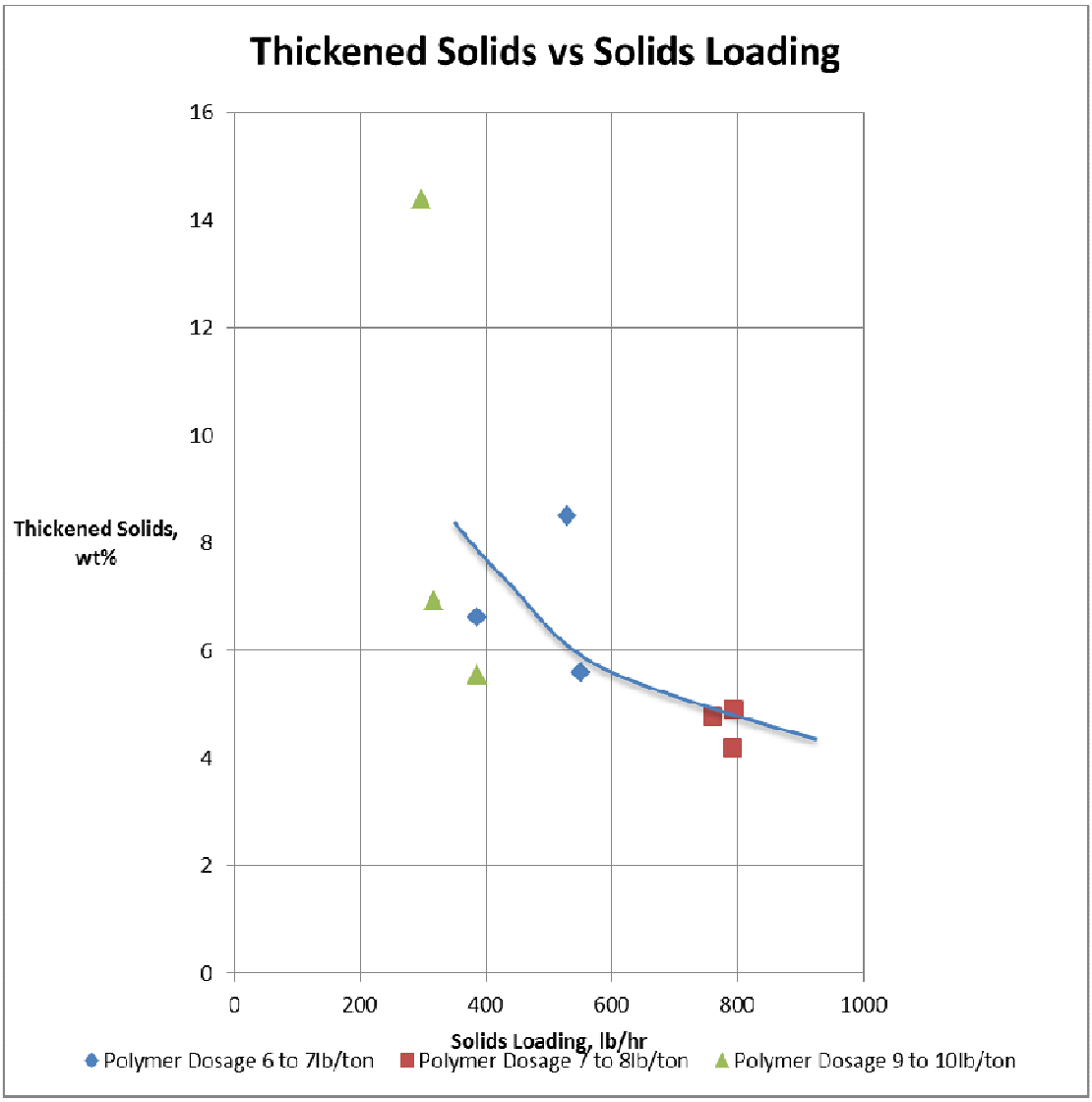

Except for the one data point where the thickened discharge was over 8%, increasing the polymer dosage did not seem to help. An adequate polymer dosage appears to be in the range of 7 to 8 lb/ton.

4.3. Capture Rate

The capture rate produced by the unit was very good. The plants analysis was not able to measure the filtrate concentration due to the solids concentration being so low. The capture was well over 95%.

Route 29 Greenwich, New York 12834
Phone No 518-695-6851

5. CONCLUSIONS AND RECOMMENDATIONS

Based on the pilot testing the GBT / 3DP Belt Press belt press was found to provide excellent performance at a low operating cost. The GBT / 3DP Belt Press belt press will process up to 800 pounds of dry solids per hour per meter and will produce a thickened discharge over 5.5 %. Polymer dosage is the single biggest operating cost, plus considering the long term objective is a thickened discharge of at least 6wt% BDP Industry's recommendation for design is the following:

- Solids Loading: 500lb/hr. per meter of belt width
- Polymer Dosage: 7 to 8lb/ton
- Solids Capture: +95%
- Thickened Discharge: +6wt%
-

6. RECOMMENDED GRAVITY BELT THICKENER:

The design performance requirements of the plant are shown in the following table:

Influent Flow	Annual Solids Production, lbs./yr.	Average Sludge Production, gpd	Flow Rate, gpm, based on 35hrs/week, and Influent of 0.5wt%	Solids Loading, lb. /hr. based on 35hrs/week
Today	152,205	10,000	33	83.4
Current	244,390	16,057	53	133.9
35mgd	303,190	19,920	66.4	166.1
50mgd	453,130	28,457	95.9	237.3

BDP offers in the smaller size Gravity Belt Thickeners a 1.0, 0.75 and 0.5 meter belt width. Based on the above sizing recommendation each of the belt widths would have the following capacity:

GBT belt width	**1.0 m**	**0.75 m**	**0.5 m**
Effective belt length	16ft	10ft	10ft

Route 29 Greenwich, New York 12834
Phone No 518-695-6851

Effective filtration area, ft2	52.5	24.6	16.4
Solids Loading Capacity, lb./hr.	550	258	172

Based on the above a 0.5 meter belt width would have adequate capacity for the present 35mgd plant capacity but not for the future expansion to 50mgd. Based on the above BDP's recommendation is a 0.75 meter Gravity Belt Thickener.

*7. **BUDGET PROPOSAL:***

One (1) 0.75m Gravity Belt Thickener or 3DP Belt Filter Press equipment package includes features as described below. It is possible to convert the Gravity Belt Thickener to a model 3DP Belt Press at any time with the addition of the Pressure Section. See drawings in Appendix 2:

1. One (1) 316L stainless steel polymer injection and polymer/sludge mixing system consisting of an injection ring, variable vortex mixer, and reducing fittings.

2. One (1) 0.75meter Gravity Belt Thickener with the following design features:

    a.) Hot-dipped galvanized tubular frame PER ASTM 123 Specification.

    b.) Machined bearing pads.

    c.) Up-flow, high solids feedbox with variable speed paddle wheel.

    d.) 10 foot long independent gravity zone with variable speed gravity section at operator level.

    e.) Six rows of adjustable, furrowing plows.

3. One (1) 0.75 meter Pressure Section:

    a.) Curved wedge section.

    b.) 20" diameter, 304 stainless steel, perforated roller.

    c.) Eight s-wrap Vertical Configuration Pressure section that avoids rewetting of the cake that happens with typical horizontal configurations.

    d.) Nylon covered rollers.

Route 29 Greenwich, New York 12834
Phone No 518-695-6851

e.) 304 stainless steel wetted parts

f.) 304 stainless steel hardware.

g.) Automatic hydraulic tracking system for each of the three belts.

h.) 50 PLI hydraulic tensioning and tracking.

i.) Independent hydraulic control stations for each belt.

j.) Composite hydraulic cylinders with 316 stainless steel rods.

k.) Self-cleaning, adjustable angle belt showers.

l.) Link Belt double roller spherical uniblock bearings with closed end caps rated for 500,000 hours at 50 PLI at 15 ft. /min.

m.) TEFC, IP65, severe duty, variable speed motors, 380 Volt 3 Ph.

4. One (1) Control Panel, 304 stainless steel NEMA 4X enclosures, with control for all dewatering system control functions and drives. The panel shall contain interlocks and controls for the gravity belt thickener / belt press, polymer system, sludge pump, booster pump, hydraulic unit, and discharge conveyors. The Main Control panel shall be based on an Allan Bradley Compact Logix PLC. A control panel will be included for either the Gravity Belt Thickener or 3DP Belt Press.

5. One (1) 2 HP hydraulic power unit with 20-gallon stainless steel reservoir.

6. One (1) Gould manufacture SSH Booster pump from 40 to 120 PSI.

7. Fluid Dynamics or equal polymer make up system

8. Boerger rotary lobe feed pump with drive assembly and VFD for speed control.

9. Seven (7) days over two trips of on-site start-up, mechanical checkout and operator training.

10. Freight to the job site.

The Gravity Belt Thickener or 3DP Belt Press will come completely factory-assembled, tested and will be shipped in two sections: gravity and pressure sections. The polymer injection devices, booster pump, hydraulic unit, belt media, sludge pump, polymer system and electrical control panel will be shipped separately for installation by others. This quotation is for furnishing equipment only and does not include any other installation labor or field services other than specified checkout, start up and testing services. All other installation, on-site assembly, anchorage, pads and other work required to facilitate the setting of the equipment is

Route 29 Greenwich, New York 12834
Phone No 518-695-6851

to be by others. All material and labor for interconnections between the press and the plant connections are to be completed by others.

Please find attached drawings both the Gravity Belt Thickener and 3DP Belt Press.

UTILITY REQUIREMENTS

Gravity Belt Thickener:

- Feed Distributor Paddle Wheel Drive: 1/3 HP
- Gravity Belt Drive: 1 HP
- Wash Water: 15 GPM @ 120 PSI (can be zero with filtrate recycle system)
- Booster Pump 3 HP
- Hydraulic Unit 1 HP

3DP Belt Press:

- Feed Distributor Paddle Wheel Drive: 1/3 HP
- Gravity Belt Drive: 1 HP
- Pressure Section: 2 HP
- Wash Water: 30gpm @120psi (can be zero with filtrate recycle system)
- Booster Pump 10 HP
- Hydraulic Unit 2 HP

BUDGET PRICING

Gravity Belt Thickener:

- One (1) Inline Venturi Mixer: $3,500
- One (1) 0.75 Gravity Belt Thickener: $80,000
- One (1) Main Control Panel: $25,000
- One (1) Wash Water Pump: $3,000
- One (1) Polymer System: $15,000

Route 29 Greenwich, New York 12834
Phone No 518-695-6851

- One (1) Feed Pump: $15,000
- Freight to Job Site: $9,000
- Seven (7) days, Three (3)trips of Field Service Engineer: $8,800
- Total: $159,300

Model 3DP Belt Press:

- One (1) Inline Venturi Mixer: $3,500
- One (1) 0.75 meter 3DP Belt Press: $140,000
- One (1) Main Control Panel: $30,000
- One (1) Wash Water Pump: $3,900
- One (1) Polymer System: $20,000
- One (1) Feed Pump: $15,000
- Freight to Job Site: $9,000
- Seven (7) days, Three (3)trips of Field Service Engineer: $8,800
- Total: $230,200

Route 29 Greenwich, New York 12834
Phone No 518-695-6851

APPENDIX 1

Table 1

		Pressure	GBT Speed	Venturi Mixer	Inflow	Process	Solids Loading	Polymer Dosage	Solids	Solids	Comments and Notes
Date	Time	Section Speed			Solids	Flow			Data	Data-Replicate	Sample Sets Collected
		%	%	PSI	%	GPM	lb/hr	lb/ton	%	%	
05/13/14	2:15 PM	35	40	0	0.8	80.3	317.44	9.07	0.79		Day 1 Sample Set
									0.00		Sample Set 1 Filtrate
									6.91		Sample Set 1 Thickened
									51.94		Sample Set 1 Cake
05/13/14	3:00PM	28	40	5	0.8	79.8	387.34	7.44	0.85	0.97	Sample Set 2 Inflow
									0.00		Sample Set 2 Filtrate
									6.61		Sample Set 2 Thickend
									33.00		Sample Set 2 Cake
05/13/14	3:46PM	25	38	5	0.8	80.6	298.46	10.45	0.74		Sample Set 3 Inflow
									0.15		Sample Set 3 Filtrate
									14.39		Sample Set 3 Thickened
									35.71		Sample Set 3 Cake
05/14/14	11:30 AM	35	40	18	0.8	100.9	550.34	6.11	1.09	0.98	Day 2 Sample Set
									0.00	0.11	Sample Set 1 Filtrate
									5.60	4.75	Sample Set 1 Thickened
									16.44	14.76	Sample Set 1 Cake
05/14/14	12:05PM	30	38	20	0.8	100.1	530.95	6.33	1.06	0.83	Sample Set 2 Inflow
									0.00	9.58(% Moisture	Sample Set 2 Filtrate
									8.49	9.72	Sample Set 2 Thickened
									15.76	15.85	Sample Set 2 Cake
05/14/14	12:37PM	20	38	20	0.8	100.3	386.46	9.94	0.77	0.80	Sample Set 3 Inflow
									0.00	100.(%Moisture)	Sample Set 3 Filtrate
									5.54	5.59	Sample Set 3 Thickened
									16.59	17.08	Sample Set 3 Cake
05/15/14	9:50 AM	55	50	25	0.8	180.8	759.97	7.90	0.84		Day 3 Sample Set 1
									0.00		Sample Set 1 Filtrate
									4.78	4.90	Sample Set 1 Thickened
									16.24	16.09	Sample Set 1 Cake
5-15-144	10:10AM	50	52	25	0.8	180.2	793.51	8.47	0.88	0.87	Sample Set 2 Inflow
									0.00		Sample Set 2 Filtrate
									4.90	4.89	Sample Set 2 Thickened
									16.49	16.32	Sample Set 2 Cake
05/15/14	10:32AM	53	50	25	0.8	179.8	791.75	8.49	0.88		Sample Set 3 Inflow
									0.00		Sample Set 3 Filtrate
									4.20	4.12	Sample Set 3 Thickened
									15.30	14.69	Sample Set 3 Cake

Route 29 Greenwich, New York 12834
Phone No 518-695-6851

APPENDIX 2 DRAWINGS

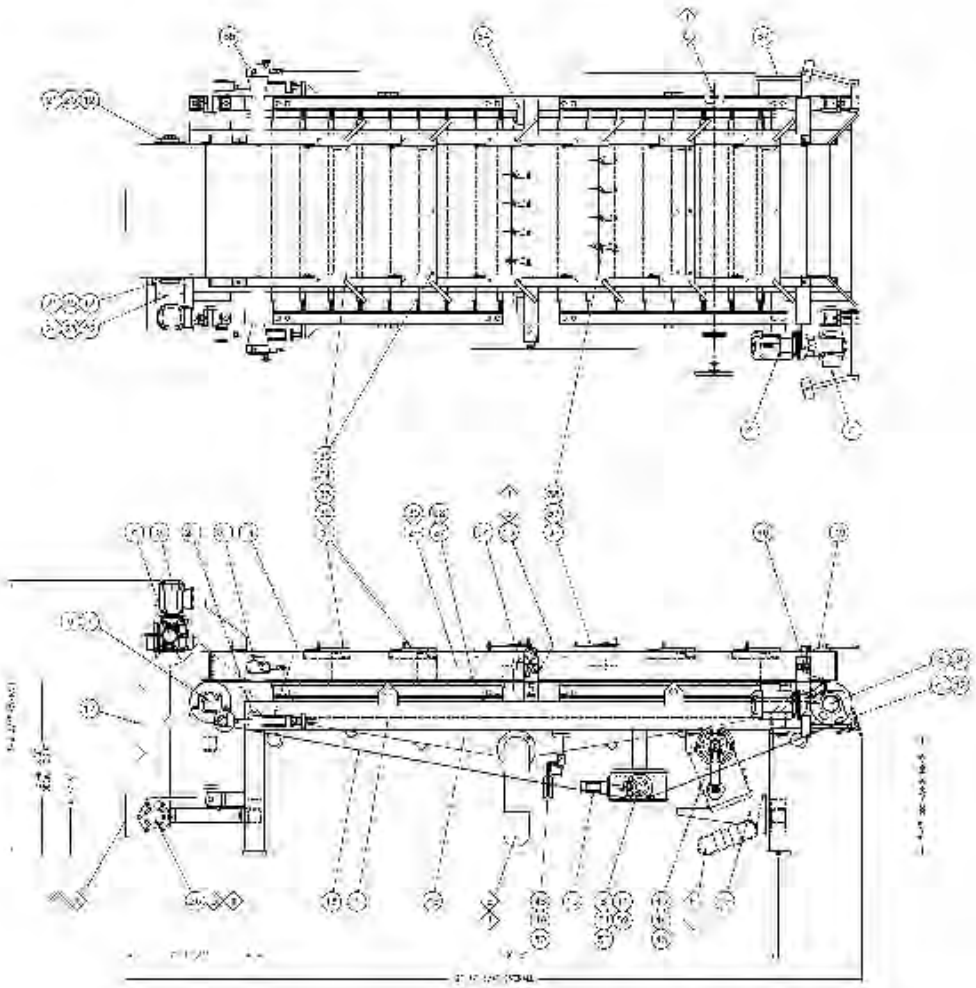

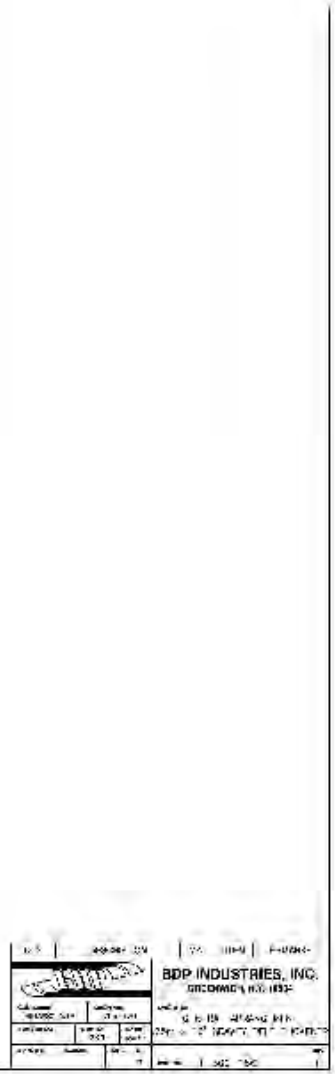

Route 29 Greenwich, New York 12834
Phone No 518-695-6851

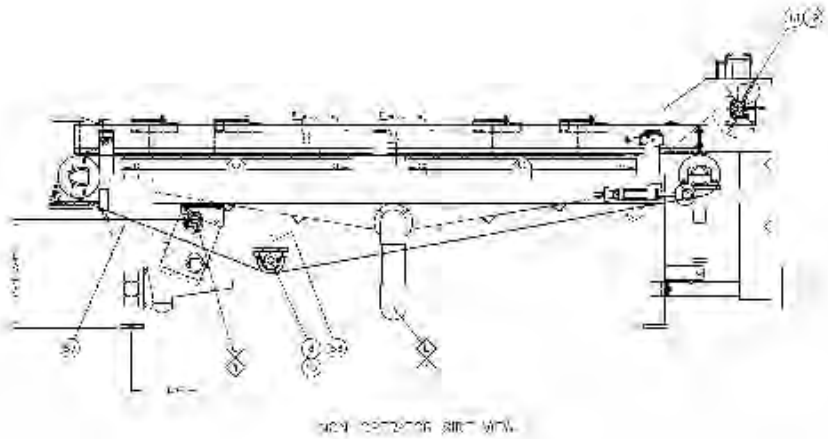

BDP INDUSTRIES, INC.

Route 29 Greenwich, New York 12834
Phone No 518-695-6851

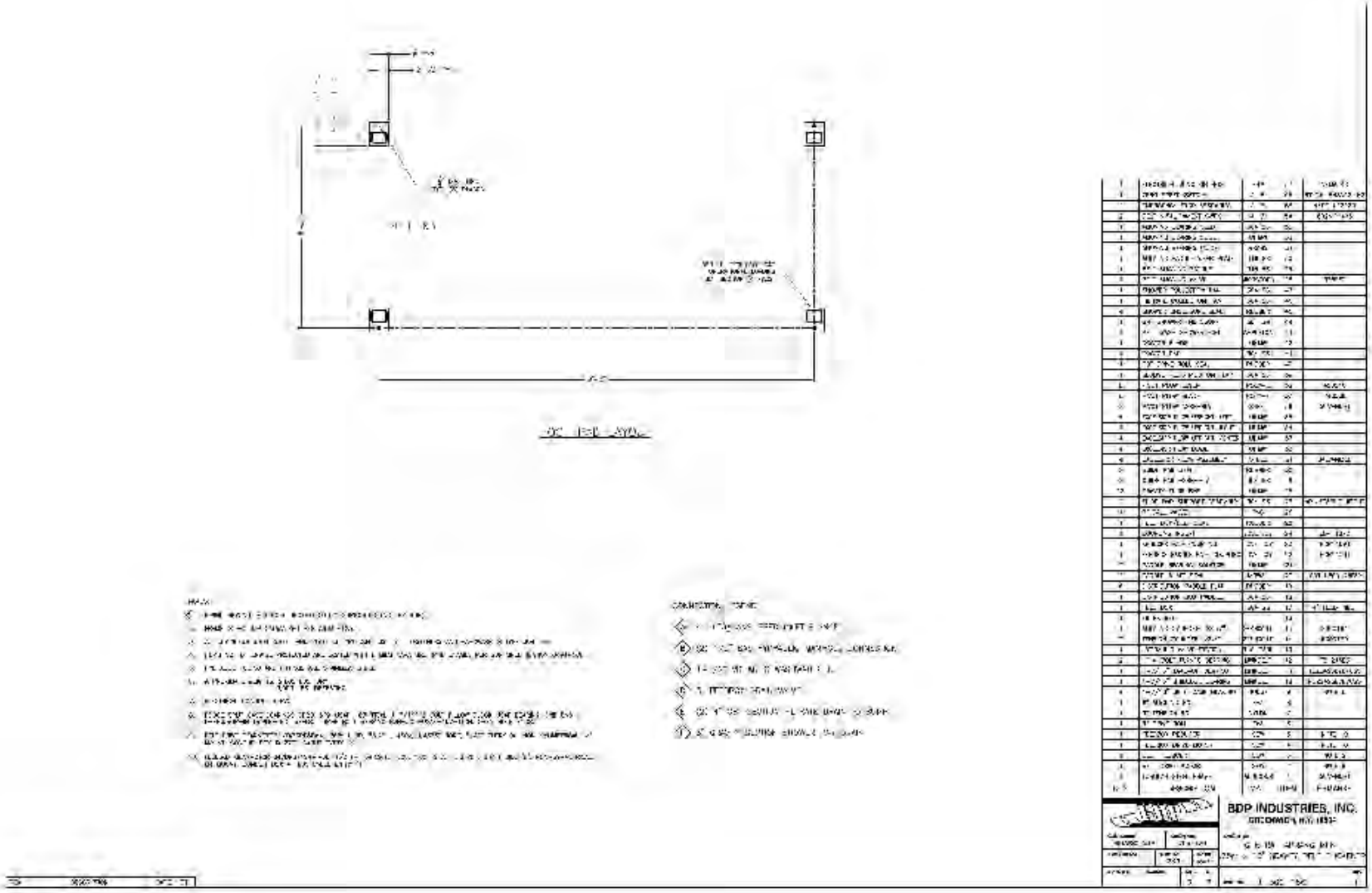

Route 29 Greenwich, New York 12834
Phone No 518-695-6851

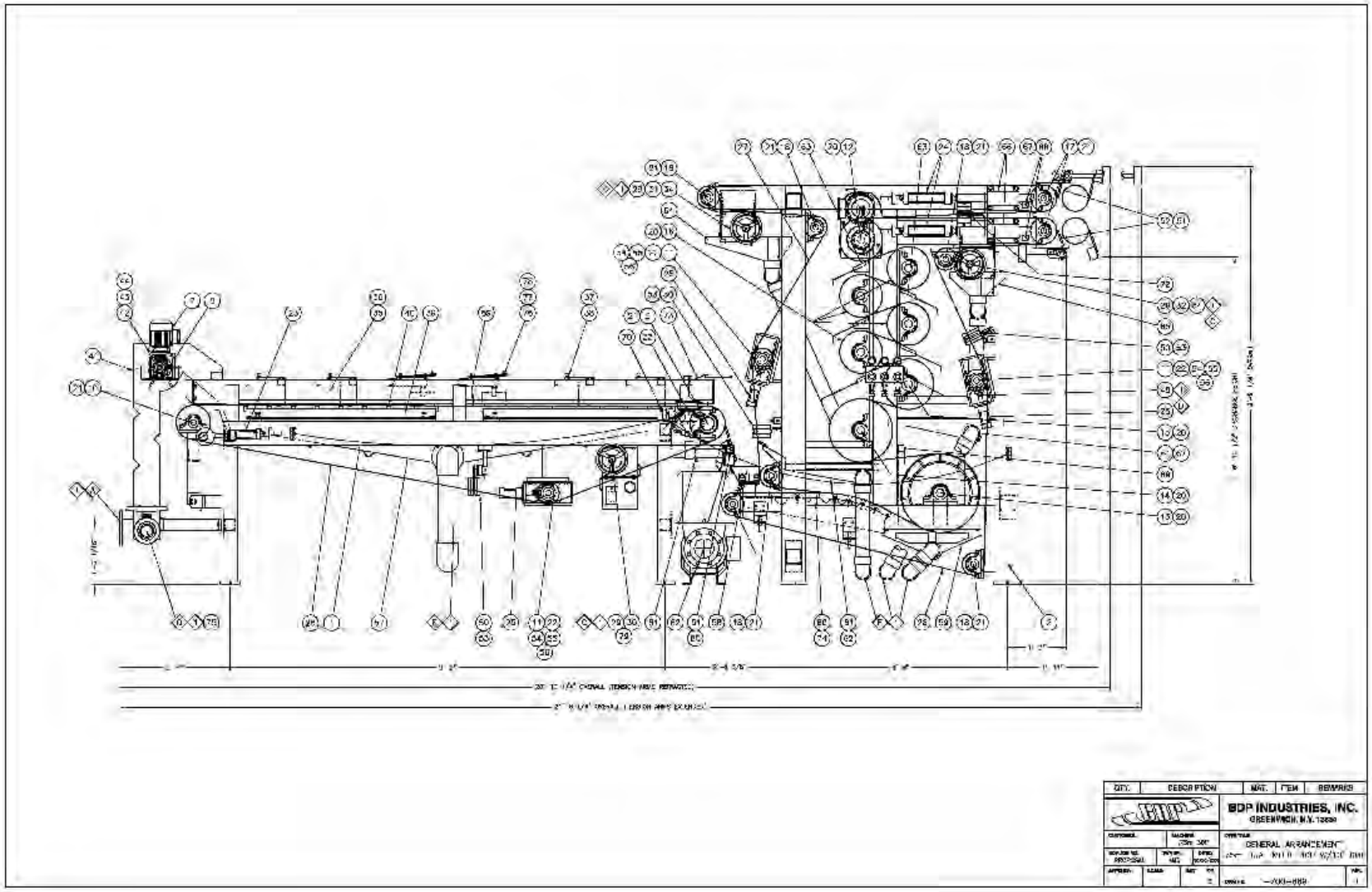

Route 29 Greenwich, New York 12834
Phone No 518-695-6851

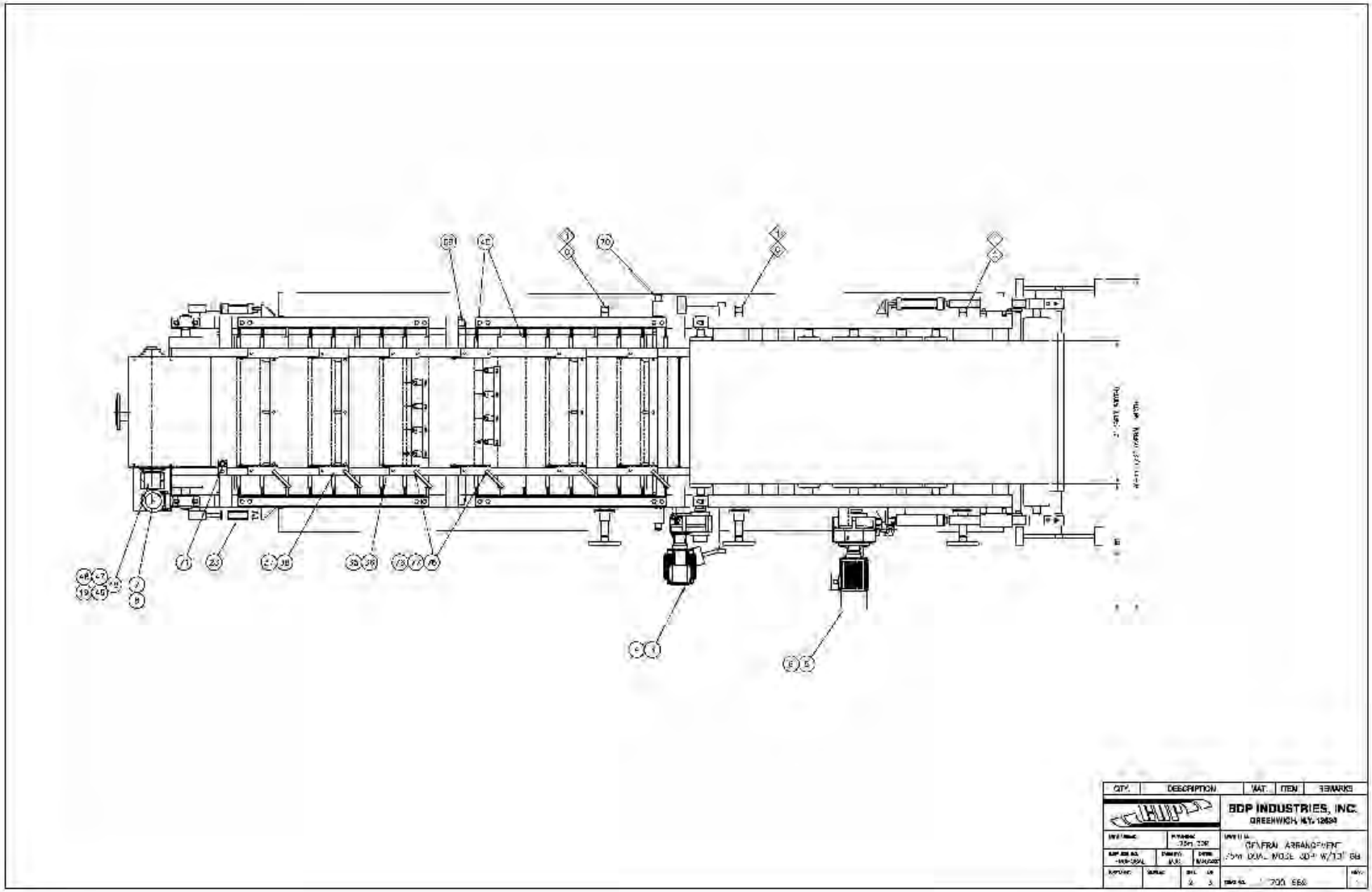

Route 29 Greenwich, New York 12834
Phone No 518-695-6851

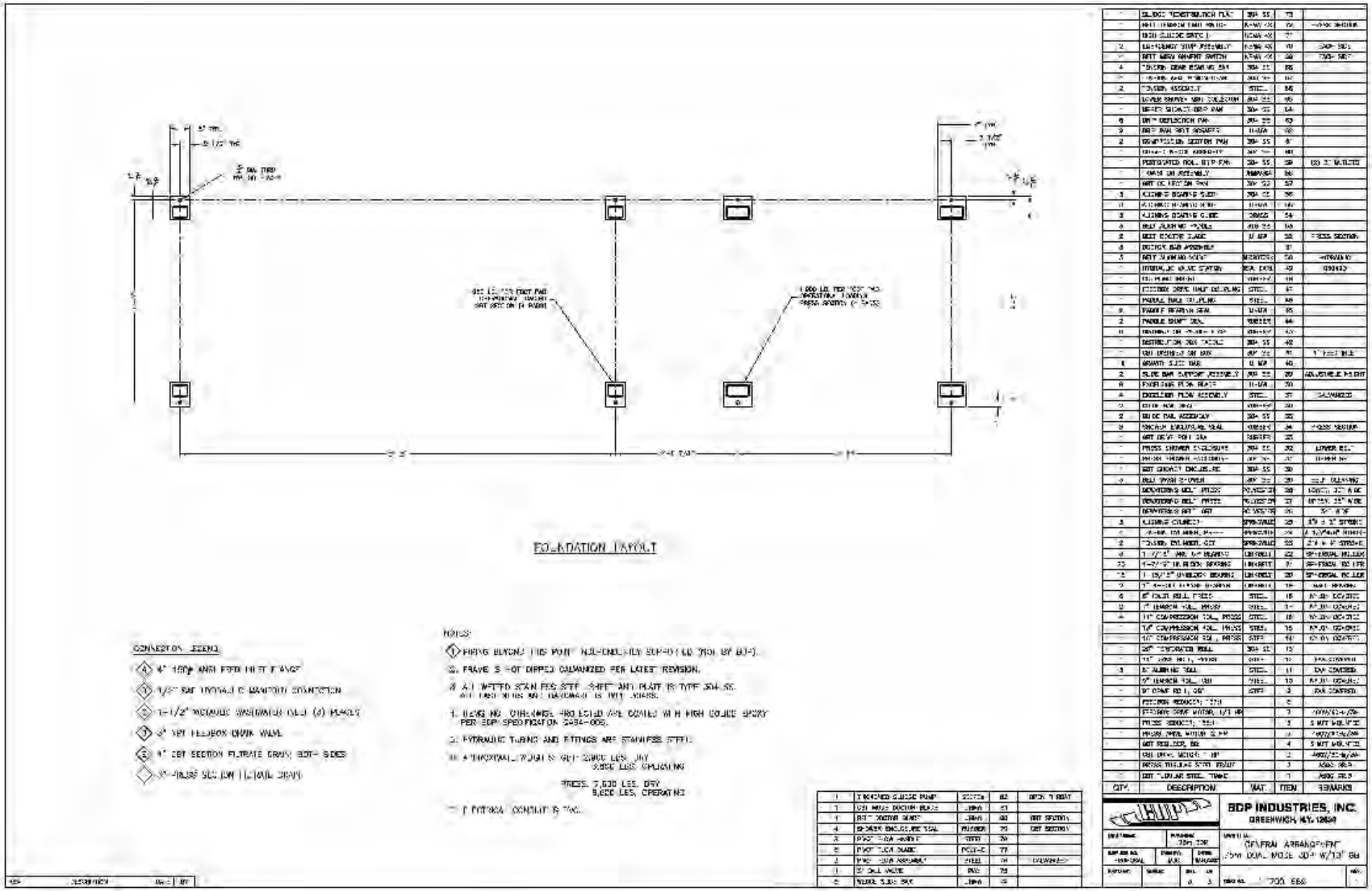

Attachment C: FKC RDT and Screw Press Piloting Report

FKC CO., LTD.

2708 West 18th Street
Port Angeles, WA 98363

(360) 452-9472
FAX (360) 452-6880

June 9, 2014

Anthony VanHaverbeke
Brown and Caldwell

Phone: 303-239-5424

Email: avanhaverbeke@brwncald.com

RE: FKC Pilot Sludge Thickening Trial Report

Dear Tony:

On behalf of FKC, I thank you for your interest in FKC's thickening equipment and the opportunity to demonstrate its capabilities at the Betasso Water Treatment Plant.
I sincerely appreciate your assistance in setting up the trailer and during the testing

Primary Purposes of the On-Site Thickening Trial

The three primary purposes of the on-site trial are:

(1) To introduce and demonstrate the applicability of FKC rotary screen thickener technology for your application.

(2) To verify performance and to gather data to assist FKC in the scale up and design of full-scale equipment for possible use in this application.

(3) To provide you an opportunity to observe and assess the potential operational, maintenance, and performance benefits of FKC rotary screen thickener technology in this application.

Overview of the FKC On-Site Trial Unit

General Layout and Process Flow

A simple drawing showing major external dimensions of the trial unit trailer is enclosed for your reference. In addition, a general arrangement drawing of the trial unit equipment and a basic flow diagram of the system also are enclosed for your reference.

Sludge Feed

For this pilot study, the sludge feed line was run from the frac tank into the inlet flange of the positive displacement pump located at the rear of the trailer. Sludge was pumped into the flocculation tank located in the middle of the trailer, just in front of the rotary screen thickener. The sludge flow was controlled with variable frequency drive.

The sludge flow was calculated using the pump curve at a given pump speed. This information, together with sludge consistency, polymer dosage, and percent polymer makedown information was used by FKC to determine polymer consumption on a dry-pounds-per-bone-dry ton of sludge basis.

Polymer Feed

Polymer was made down in and pumped out of the polymer tank. The tank was filled with the polymer used as a flocculant. A variable speed diaphragm-type polymer pump was used to pump polymer from the polymer tank into the flocculation tank.

The polymer flow was calculated using the pump curve at a given pump speed.

Flocculation

The flocculation tank has two separate, individually agitated chambers. Polymer was added to the sludge before the 1st chamber of the flocculation tank. As the sludge / polymer mixture moved up through the chamber (in a bottom-to-top direction) additional agitation and time were used to complete the flocculation process. The flocculated sludge overflowed the flocculation tank chamber though a stainless steel trough and flowed into the headbox of the trial unit rotary screen thickener.

Rotary Screen Thickener Control

The rotary screen thickener was run continuously. The sludge pump and polymer pump speeds were adjusted to maintain ideal conditioning and vary flow to the rotary screen thickener. The system was run under stable conditions for 30-45 minutes prior to samples being collected.

Thickened Cake Solids

Thickened cake solids were discharged from the rotary screen thickener into the screw press filtrate pan and discharged with the rotary screen thickener filtrate.

At specific time intervals indicated on the attached data sheet, samples of thickened cake solids were collected. The samples were used for consistency analysis utilizing moisture meters located in the laboratory area. Samples were also given to the plant for additional testing of cake dryness.

Overview of the On-Site Trial

The fundamental design and operating parameters having the most direct impact on the thickening performance of FKC rotary screen thickener technology in this application are the sludge flow rate and polymer dosage rate. The on-site trial consisted of a series of different operating parameters. Each set of parameters had a specific purpose related to thickening performance.

Prior to collecting each sample, the trial unit rotary screen thickener was set up to run under a specific set of operating parameters (e.g. sludge feed rate, polymer dose, etc.). Once the operational parameters were established, the trial unit was operated under stable conditions until steady state performance was achieved and run for 30-45 minutes prior to obtaining samples.

Samples collection times were recorded, as well as the operating parameters preceding that sample collection.

Successive samples were collected after a potential change in one of the design or operational parameters to determine the effect of the change made.

Summary of On-Site Trial

A summary of the data collected is contained in the FKC on-site trial data sheets enclosed with this report. Feed flow rate, wash water flow rate, feed total solids, filtrate TSS (if available), percent solids captured (if filtrate TSS is available), thickened sludge concentration, polymer dosage rate and power usage for each data point are included.

Following is a summary of (11) eleven thickening and (4) four dewatering test runs on May 20th to May 22nd 2014 and observations made for each. All thickening testing was performed with the RST-315x1000 thickener and all dewatering testing was performed with a single-stage, low compression, Teflon coated screw (screw design "1003"). The chemical conditioning consisted of 12 – 16 lbs (active) of polymer / dry ton of sludge. The PWG emulsion polymer used was SNF EM533 (42% active). All outlet consistency %'s listed on the spreadsheet are averages of FKC onsite tests and Boulder lab tests.

<u>5/20/14 Thickening</u>

<u>2:00 PM</u>

Thickening was performed at a sludge feed rate of 4.17 gpm with a polymer dosage rate of 12.6 active lbs per dry ton. Outlet consistency under these parameters was 3.63%.

<u>2:45 PM</u>

Thickening was performed at a sludge feed rate of 4.68 gpm with a polymer dosage rate of 13.11 active lbs per dry ton. Outlet consistency under these parameters was 3.86%.

At this point the sludge feed rate was reduced in order to obtain outlet consistencies over 4%.

<u>4:15 PM</u>

Thickening was performed at a sludge feed rate of 3.48 gpm with a polymer dosage rate of 13.94 active lbs per dry ton. Outlet consistency under these parameters was 4.44%.

<u>5:00 PM</u>

Thickening was performed at a sludge feed rate of 3.48 gpm with a polymer dosage rate of 15.62 active lbs per dry ton. Outlet consistency under these parameters was 4.36%.

<u>5/21/14 Thickening</u>

<u>9:00 AM</u>

Thickening was performed at a sludge feed rate of 3.48 gpm with a polymer dosage rate of 15.45 active lbs per dry ton. Outlet consistency under these parameters was 4.53%.

10:00 AM

Thickening was performed at a sludge feed rate of 3.48 gpm with a polymer dosage rate of 16.36 active lbs per dry ton. Outlet consistency under these parameters was 4.2%.

11:00 AM

Thickening was performed at a sludge feed rate of 3.48 gpm with a polymer dosage rate of 16.45 active lbs per dry ton. Outlet consistency under these parameters was 4.78% and capture efficiency was 98.1%

At this point the customer requested to run at the minimum effective polymer dose so the polymer dosage rate was decreased.

12:00 PM

Thickening was performed at a sludge feed rate of 3.48 gpm with a polymer dosage rate of 12.41 active lbs per dry ton. Outlet consistency under these parameters was 4.42% and capture efficiency was 90.4%

1:00 PM

Thickening was performed at a sludge feed rate of 3.48 gpm with a polymer dosage rate of 12.09 active lbs per dry ton. Outlet consistency under these parameters was 4.34% and capture efficiency was 93.3%

2:00 PM

Thickening was performed at a sludge feed rate of 3.48 gpm with a polymer dosage rate of 12.41 active lbs per dry ton. Outlet consistency under these parameters was 4.34% and capture efficiency was 90.8%

Polymer dosage was then increased to ideal dosages for the final thickening run.

3:00 PM

Thickening was performed at a sludge feed rate of 3.48 gpm with a polymer dosage rate of 16.9 active lbs per dry ton. Outlet consistency under these parameters was 4.97% and capture efficiency was 97.6%

This concluded the testing for thickening.

At this point, per customer request, the trailer was retrofitted to run sludge through the screw press for dewatering.

5/22/14 Dewatering

9:00 AM
Dewatering was performed at a sludge feed rate of 2.09 gpm with a polymer dosage rate of 15.05 active lbs per dry ton. Outlet consistency under these parameters was 8.97% and capture efficiency was 99.3%

10:00 AM
Dewatering was performed at a sludge feed rate of 2.09 gpm with a polymer dosage rate of 15.79 active lbs per dry ton. Outlet consistency under these parameters was 8.64% and capture efficiency was 99.2%

At this point additional back-pressure was applied to the discharge point of the cake from the screw press to achieve higher outlet dryness.

11:00 AM
Dewatering was performed at a sludge feed rate of 2.09 gpm with a polymer dosage rate of 14.65 active lbs per dry ton. Outlet consistency under these parameters was 9.46% and capture efficiency was 99.4%

11:30 AM
Dewatering was performed at a sludge feed rate of 2.09 gpm with a polymer dosage rate of 14.82 active lbs per dry ton. Outlet consistency under these parameters was 9.50% and capture efficiency was 99.2%

Conclusions

During the on-site testing, FKC identified some critical factors necessary for optimizing rotary screen thickener and Screw Press performance:

- The maximum dryness for thickening appeared to be just over 4% while the maximum dryness for dewatering appeared to be just over 9%.
- The optimum polymer dosage rate appeared to be ~15 active lbs per dry ton for both thickening and dewatering.

These results demonstrate that the FKC rotary screen thickener is capable of thickening and dewatering the WTP Alum sludge at the Betasso Water Treatment Plant. A full size rotary screen thickener would deliver outlet consistencies of up to 4% and a full sized screw press would deliver outlet consistencies of up to 9%.

An equipment proposal for full scale units, capable of meeting the specified design performance criteria, will accompany this report.

Please review the information provided in this report and feel free to contact me with any questions that you have.

Regards,
FKC Co., Ltd.

Shane Harvey

SCREW PRESS ON-SITE
TRIAL DATA SHEET

FKC

TRIAL DATE:	20-May-14														
LOCATION:	Boulder CO														
PERFORMED BY:	Shane														
SCREW SPECS:	Screw "1003"														
SLUDGE TYPE:	WTP Alum														All poly flow before 1st tank
SLUDGE FIBER CONTENT %															
SLUDGE ASH CONTENT %															active
POLYMER TYPE	EM533		0.50%												42.0%
POLYMER TYPE			0.20%												100%
SLUDGE PUMP MAX FLOW (gpm)	13.9000	gpm													
BIG POLY PUMP MAX FLOW (gpm)		gpm													
Small POLY PUMP MAX FLOW (gpm)	0.4430	gpm													
Time	2:00	2:45	4:15	5:00	9:00	10:00	11:00	12:00	1:00	2:00	3:00	9:00	10:00	11:00	11:30
Date	5/20/14	5/20/14	5/20/14	5/20/14	5/21/14	5/21/14	5/21/14	5/21/14	5/21/14	5/21/14	5/21/14	5/22/14	5/22/14	5/22/14	5/22/14
RDT Hz	38.00	38.00	38.00	38.00	38.00	38.00	38.00	38.00	38.00	38.00	38.00				
Screw Hz	60.00	60.00	60.00	60.00	60.00	60.00	60.00	60.00	60.00	60.00	60.00				
Screw RPM												0.50	0.50	0.50	0.50
Straight Length												90	90	max	max
Shower Water (GPM)	2.67	2.67	2.67	2.67	2.67	2.67	2.67	2.67	2.67	2.67	2.67	0	0	0	0
Amps	0.81	0.81	0.81	0.81	0.81	0.81	0.81	0.81	0.81	0.81	0.81	2	2	2	2
Inlet pH	7	7	7	7	7	7	7	7	7	7	7	7	7	7	7
Inlet Consist % (FKC)	0.82%	0.82%	0.90%	0.90%	1.01%	0.96%	0.94%	0.95%	0.95%	0.94%	0.89%	0.95%	0.88%	0.82%	0.81%
Inlet Consist % (Plant)	0.95%	1.00%	1.02%	1.02%	0.97%	0.91%	0.92%	0.94%	0.99%	0.95%	0.92%	0.97%	0.95%	0.92%	0.91%
Inlet Consist % (Average)	**0.89%**	**0.91%**	**0.96%**	**0.96%**	**0.99%**	**0.94%**	**0.93%**	**0.95%**	**0.97%**	**0.95%**	**0.91%**	**0.96%**	**0.92%**	**0.87%**	**0.86%**
Screw Press Speed												0.5	0.5	0.5	0.5
Small Poly Pump Speed	25	30	25	28	30	30	30	23	23	23	30	17	17	15	15
Sludge Pump setting(Hz)	18.0	20.2	15.0	15.0	15.0	15.0	15.0	15.0	15.0	15.0	15.0	9.0	9.0	9	9
Outlet Cons.% (FKC TRAIL LAB)	3.55%	3.70%	4.08%	4.22%	4.39%	3.96%	4.56%	4.13%	3.93%	3.75%	4.98%	8.80%	8.01%	9.16%	8.84%
Outlet Cons.% (Plant LAB)	3.70%	4.01%	4.80%	4.50%	4.66%	4.44%	5.00%	4.70%	4.74%	4.26%	4.95%	9.14%	9.27%	9.75%	10.15%
Outlet Cons.% Average	**3.63%**	**3.86%**	**4.44%**	**4.36%**	**4.53%**	**4.20%**	**4.78%**	**4.42%**	**4.34%**	**4.01%**	**4.97%**	**8.97%**	**8.64%**	**9.46%**	**9.50%**
Sludge Flow (GPM)	**4.17**	**4.68**	**3.48**	**3.48**	**3.48**	**3.48**	**3.48**	**3.48**	**3.48**	**3.48**	**3.48**	**2.09**	**2.09**	**2.09**	**2.09**
Sludge Flow (dry lbs/hr)	18.47	21.31	16.69	16.69	17.22	16.26	16.17	16.43	16.87	16.43	15.74	10.02	9.55	9.08	8.97
Sludge Flow (dry T/D)	0.22	0.26	0.20	0.20	0.21	0.20	0.19	0.20	0.20	0.20	0.19	0.12	0.11	0.11	0.11
Polymer #1 Flow (GPM)	0.11	0.13	0.11	0.12	0.13	0.13	0.13	0.10	0.10	0.10	0.13	0.08	0.08	0.07	0.07
Polymer #1 Flow (neat lbs/hr)	0.28	0.33	0.28	0.31	0.13	0.13	0.13	0.10	0.10	0.10	0.13	0.08	0.08	0.07	0.07
Polymer #1 Dosage (Active lb/DT)	**12.60**	**13.11**	**13.94**	**15.62**	**15.45**	**16.36**	**16.45**	**12.41**	**12.09**	**12.41**	**16.90**	**15.05**	**15.79**	**14.65**	**14.82**
Polymer #1 Dosage (Active kg/BDMT)	6.40	6.66	7.08	7.93	7.85	8.31	8.36	6.31	6.14	6.31	8.59	7.65	8.02	7.44	7.53
Filtrate TSS							224.0	1120.0	820.0	1110.0	260.0	70.0	80.0	60.0	77.1
Capture %							**98.1%**	**90.4%**	**93.3%**	**90.8%**	**97.6%**	**99.3%**	**99.2%**	**99.4%**	**99.2%**

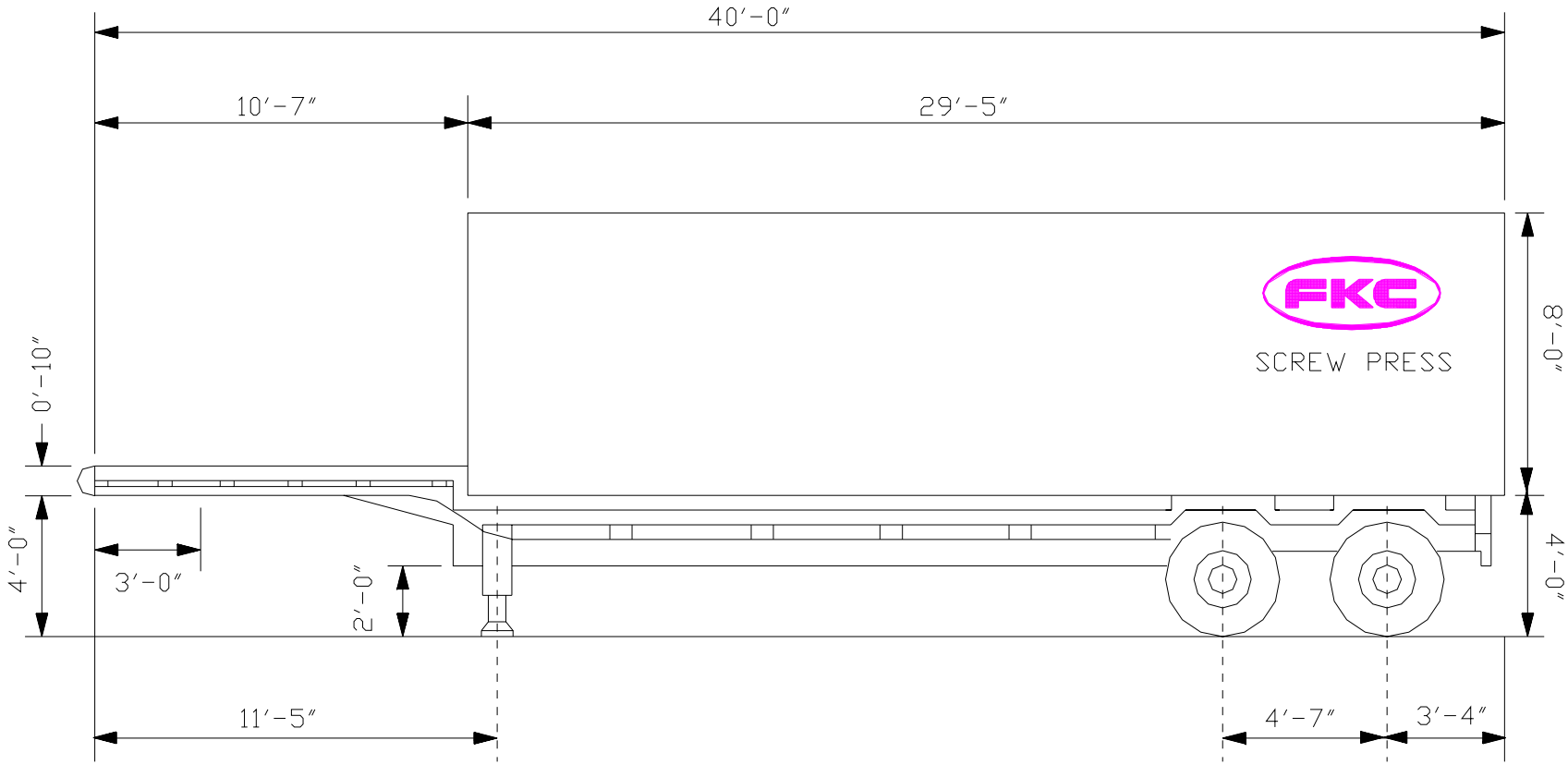

Mark	Description	Material	pcs.	Weight kg.	Remarks
JOB No.	Messrs. REFERENCE			Quantity	Scale
Drawing No.	Title Test Trailer			Date	
				Drawn by TB	
					Ref. JOB No.

FKC CO., LTD.

P.O. BOX 1677 OR 2708 W. 18TH ST.
PORT ANGELES, WA 98362
(360) 452-9472 FAX (360) 452-6880

REVISION 1 | SHEET 1 OF 1

No.	Alteration	Date	Sign.

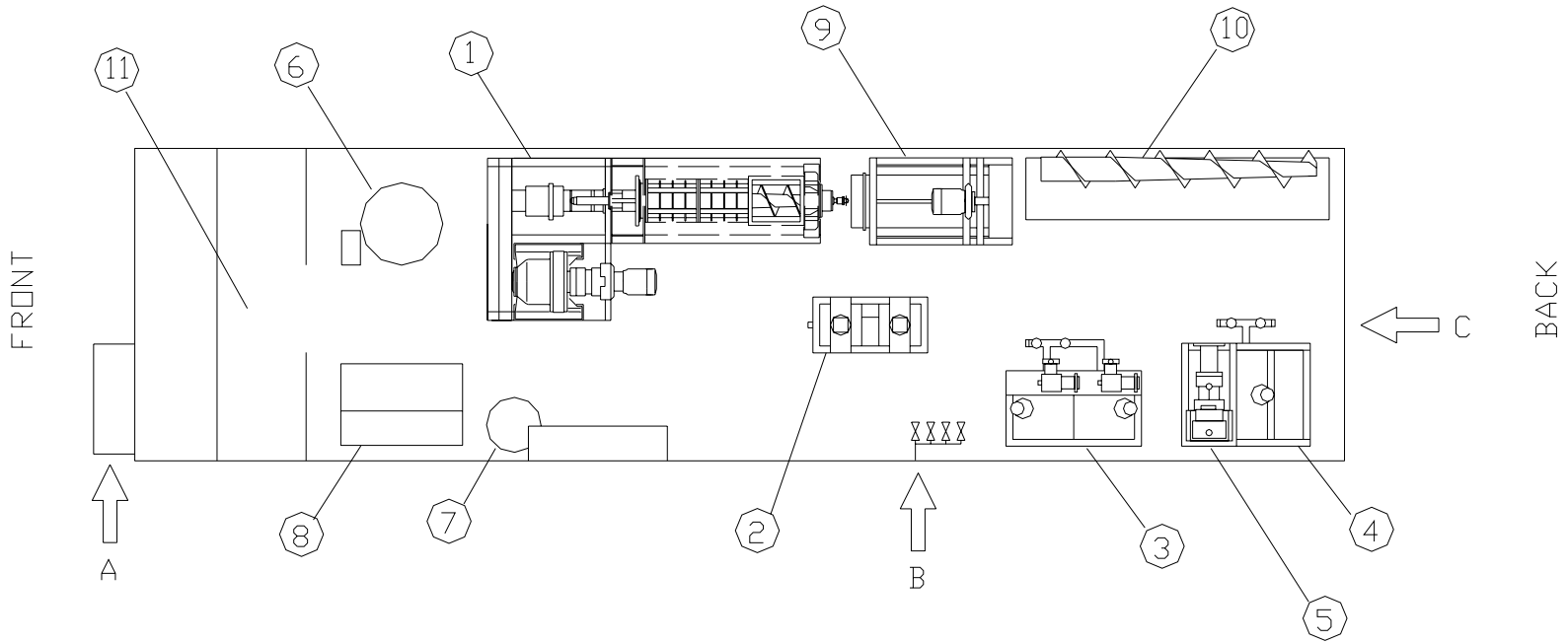

1	SCREW PRESS
2	FLOCCULATION TANKS W/ AGITATORS
3	POLYMER TANKS W/ AGITATORS
4	SLUDGE TANK W/ AGITATOR
5	SLUDGE FEED PUMP
6	BOILER
7	BOILER FUEL TANK
8	CONTROL PANEL
9	ROTARY SCREEN THICKNER
10	SPARE SCREWS SHELVING
11	LAB

A	ELECTRICAL CONNECTION
	575V or 480V / 3 PH / 15 AMP
B	WATER CONNECTION 3/4" NPT
C	SLUDGE CONNECTION
	2 1/2" FEMALE CAMLOCK

No.	Alteration	Date	Sign.

Mark	Description	Material	pcs.	Weight kg.	Remarks
JOB No.	Messrs. REFERENCE			Quantity	Scale
Drawing No.	Title Test Trailer General Arrangement			Date	
				Drawn by TB	
					Ref. JOB No.

FKC CO., LTD.

P.O. BOX 1677 OR 2708 W. 18TH ST.
PORT ANGELES, WA 98362
(360) 452-9472 FAX (360) 452-6880

REVISION 1 SHEET 1 OF 1

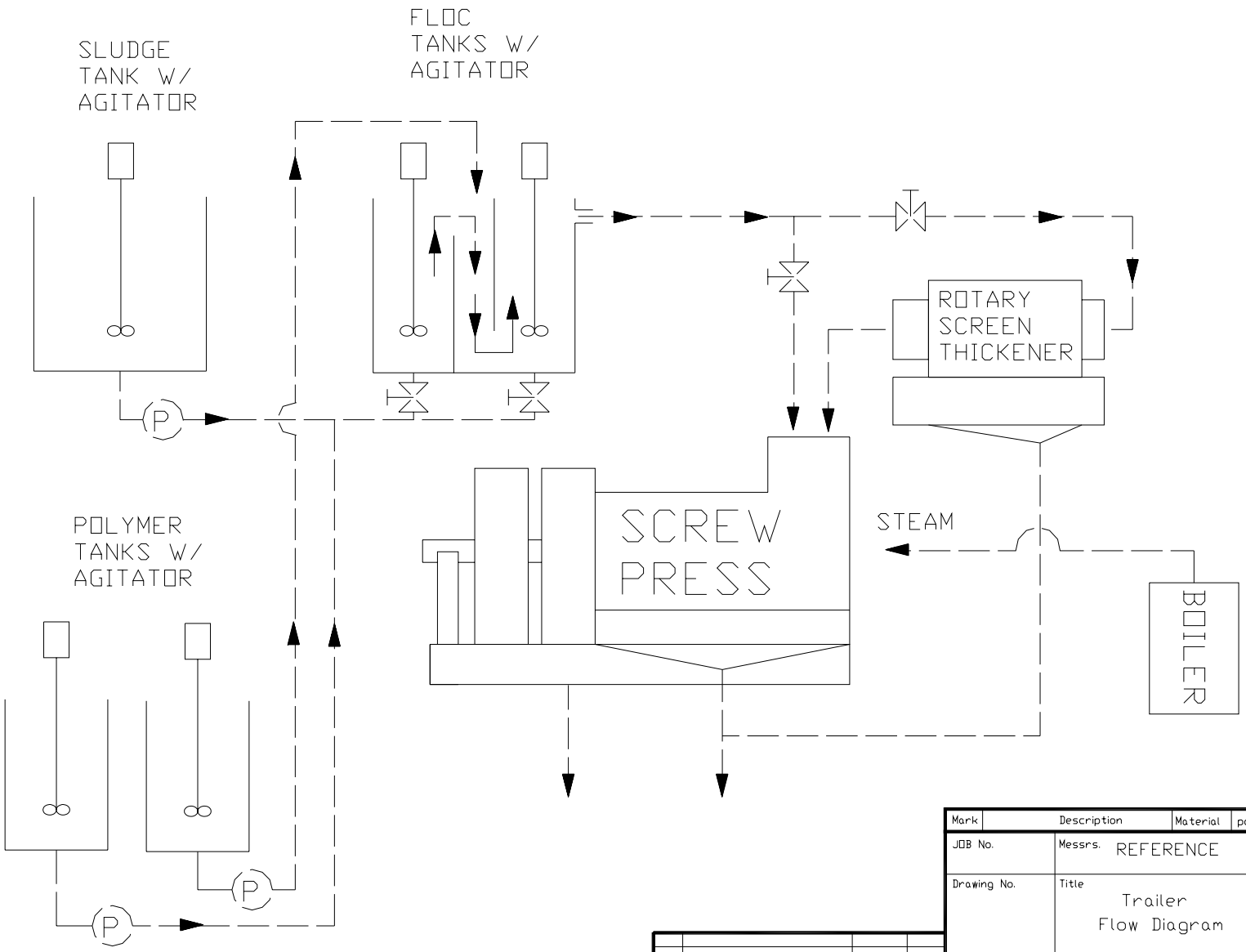

Mark	Description	Material	pcs.	Weight kg.	Remarks
JOB No.	Messrs. REFERENCE			Quantity	Scale
Drawing No.	Title Trailer Flow Diagram			Date	
				Drawn by TB	Ref. JOB No.

FKC CO., LTD.
P.O. BOX 1677 OR 2708 W. 18TH ST.
PORT ANGELES, WA 98362
(360) 452-9472 FAX (360) 452-6880

REVISION 1 | SHEET 1 OF 1

No.	Alteration	Date	Sign.

Model S630
Rotary Drum Thickener
Quotation

A. Proposed Equipment

Qty.	Description	FOB Betasso WTP, Colorado
1 unit	FKC Rotary Screen Thickener Model RST-S630x3000L	$64,910 each
	Material:	Alum & PACL sludge from Municipal WTP
	Inlet Consistency:	0.9 % Total Solids or greater
	Inlet Hydraulic Capacity:	40 gpm
	Inlet Solids Loading Rate:	180 dry lbs per hour
	Outlet Consistency:	4% Total Solids or greater
	Polymer Requirements:	EM533 NSF emulsion @ 42% active
	Estimated Polymer Usage:	12 to 17 active lbs per dry ton
	Controls:	Power and logic control are not included with the price of this equipment.
	Supervision Requirements:	The amount of supervision required is proportional to inlet consistency fluctuation. High inlet consistency fluctuation requires a greater level of supervision. A consistent inlet %TS can be left unattended for most of the day.
	Materials of construction:	SS-304 wetted parts Other Painted Carbon Steel
	Speed reducer:	SEW Varimot Gearbox w/ Motor: 2.0HP 460V/3PH/60Hz
	Other:	One (1) 150GL Flocculation Tank w/ SEW Varimot Gearbox w/ Motor: 1.0HP 460V/3PH/60Hz
	Delivery:	Delivery within four (4) months after approval of submittals and notice to proceed with manufacturing.

*Prices do not include taxes or bonding requirements

B. Miscellaneous

1. Delivery

On-site delivery will be within four (4) months after approval of submittals and notice to proceed with manufacturing.

2. Shipping Arrangements

The FKC thickening equipment will be shipped best way overland from Port Angeles, Washington to Betasso WTP, Colorado.

3. Equipment Summary

The following summarizes the equipment offered:

(1) One FKC Model RST-S630x3000L Rotary Screen Thickeners (RST)
(1) One FKC Model150 Flocculation Tank

$64,910 FOB Betasso WTP, Colorado

*Scope of Supply does not include taxes or bonding.

The supply does not include power or logic controls, valves, pumps, field instrumentation, or any other ancillary equipment needed for a complete thickening installation.

4. Options Offered

No options are offered at this time

5. Effective Period

This proposal shall remain valid 60 days from the date of the proposal.

6. Payment Terms

30% with approval drawings & submittals
30% notice to proceed with manufacturing
40% with delivery

Net 30 days

It is understood that up to 10% of the total purchase price may be retained until performance criteria have been demonstrated and met.

7. Installation

The Rotary Screen Thickener is shipped ready for installation.

The Flocculation Tank is shipped ready for installation. Field assembly of the agitator drive, base and blades are required.

8. Operator Training and Start Up

Three (3) full days (weekend & holidays not included) in three separate trips are provided for any on-site work by a manufacturer's representative for equipment checkout, start-up, demonstration, testing, training, etc.

Other installation and erection assistance are not included in the price of the equipment and generally are not required. However, the service is available for our standard service rates (see the enclosed rate sheet).

9. Warranty

FKC's mechanical warranty covers material and workmanship for a period of twelve (12) months from start-up or eighteen (18) months from delivery whichever occurs first.

10. Documentation Schedule

The drawings provided with this scope of supply are reference drawings only.

A. Approval Drawings - within 3 weeks after receipt of purchase order
B. Certified Drawings - within 2 weeks after return of approval drawings
C. Operation and Maintenance Manuals - 14-16 weeks after receipt of order

11. Performance Guarantee

The performance figures and conditions denoted in section A of this proposal constitute FKC Co., Ltd.'s performance guarantee and the conditions required to meet the guarantee.

In the event that performance is not met, FKC will provide all parts, engineering, and labor associated with the work necessary to bring the equipment into conformance with the performance guarantee.

12. Notes and Clarifications to the Specifications & Drawings

None.

13. Service Rates

The following are rates and terms for professional and technical services furnished by FKC: If required, round-trip airfare (coach class) from Port Angeles, WA to airport nearest work site.

Weekdays

$1000.00 - Per eight (8) hour day on weekdays plus, lodging, and rental car expenses.
$187.50 - Per hour for all hours exceeding eight (8) hour workday on weekdays.
$108.00 - Per hour for office engineering services and telephone consultations.

Saturdays, Sundays and Holidays

$1,440.00 - Per eight (8) hour day plus lodging and rental car expenses.
$270.00 - Per hour for all hours exceeding eight (8) hour workday.

Travel Time - Weekdays

$80.00 - Per hour travel time. (Not to exceed $990/day)

Travel Time – Weekends and US Holidays

$120.00 - Per hour travel time (Not to exceed $1,440/day)

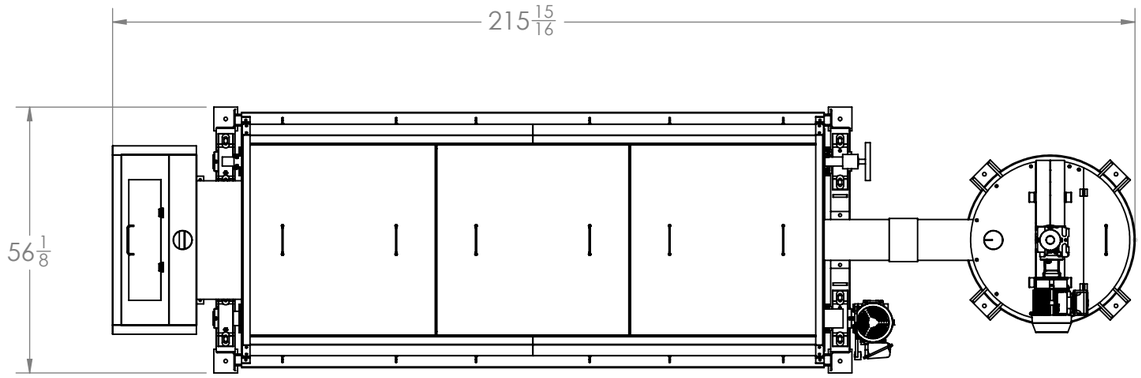

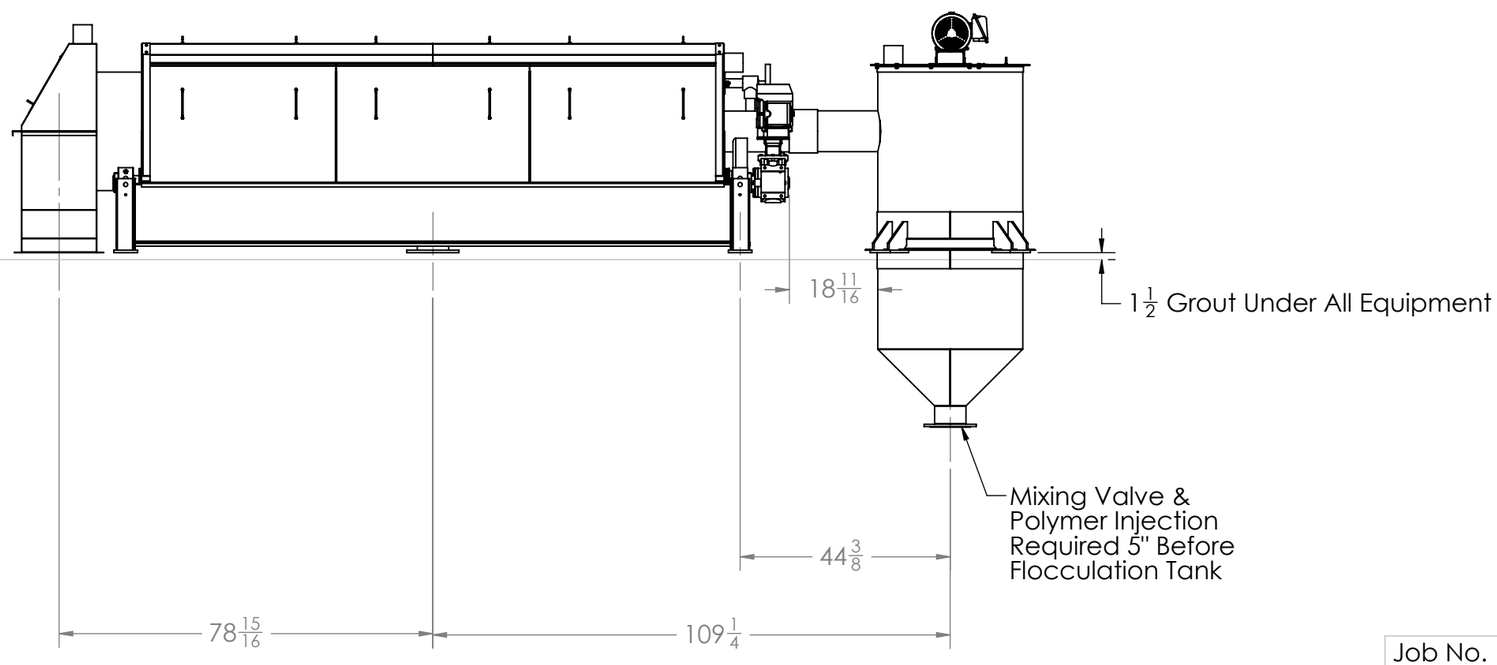

Job No. RST-	Customer Reference .		Wt. Lbs.
Drawing No. L-801	Title RST-S630x3000L & 150 Floc Tank Layout Details		Quantity 1
			Date 7/15/13
FKC	FKC CO. LTD 2708 W 18th St. Port Angeles, WA 98363 (360) 452-9472 Fax (360) 452-6880		Drawn By RTB
	Revision		SHEET 1 OF 1

PROPRIETARY AND CONFIDENTIAL
THE INFORMATION CONTAINED IN THIS DRAWING IS THE SOLE PROPERTY OF FKC CO LTD. ANY REPRODUCTION IN PART OR AS A WHOLE WITHOUT THE WRITTEN PERMISSION OF FKC CO LTD IS PROHIBITED.

No.	Alteration	Date	Sign
1	Issued as Reference	10/31/13	RTB

Model S775

Rotary Drum Thickener

Cut Sheet

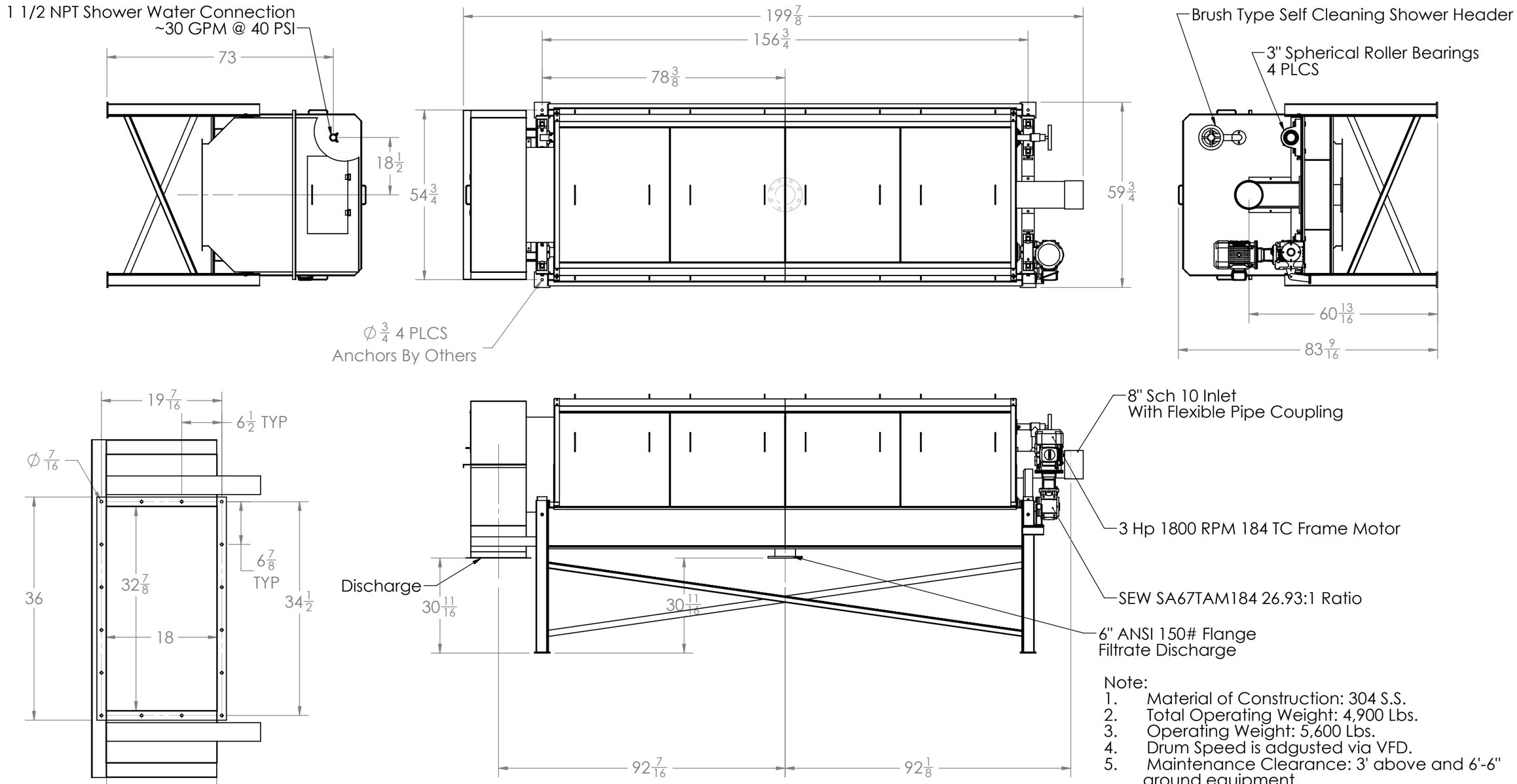

Discharge Flange Detail

Note:
1. Material of Construction: 304 S.S.
2. Total Operating Weight: 4,900 Lbs.
3. Operating Weight: 5,600 Lbs.
4. Drum Speed is adgusted via VFD.
5. Maintenance Clearance: 3' above and 6'-6" around equipment.

Drum Speed:
180~1800 x 1/26.93 x 9.875/36= 1.83~18.33 RPM

PROPRIETARY AND CONFIDENTIAL
THE INFORMATION CONTAINED IN THIS DRAWING IS THE SOLE PROPERTY OF FKC CO LTD. ANY REPRODUCTION IN PART OR AS A WHOLE WITHOUT THE WRITTEN PERMISSION OF FKC CO LTD IS PROHIBITED.

No.	Alteration	Date	Sign
1	Issued as Reference	5/6/13	RTB

Job No. RST-	Customer Reference .	Wt. Lbs.
Drawing No. A-001	Title RST-S775x3600L Assembly Details	Quantity
		Date 5/6/13
	FKC CO. LTD 2708 W 18th St. Port Angeles, WA 98363 (360) 452-9472 Fax (360) 452-6880	Drawn By RTB
	Revision	SHEET 1 OF 1

Model BHX-700 Screw Press Dewatering Skid Quotation

A. Proposed Equipment

Qty.	Description	FOB Bettaso WTP, CO
1	FKC Screw Press Model BHX-700x4000L	US$ 296,900
	Material:	Alum & PACL sludge from Municipal WTP
	Inlet Consistency: Inlet Hydraulic Capacity: Inlet Solids Loading Rate:	0.9 % Total Solids or greater 40 gpm @ 0.9% TS 180 dry lbs per hour
	Outlet Consistency:	8 to 10% Total Solids
	Polymer Requirements:	EM533 NSF emulsion @ 42% active
	Estimated Polymer Usage:	15 to 17 active lbs per dry ton
	Supervision Requirements:	The amount of supervision required is proportional to inlet consistency fluctuation. High inlet consistency fluctuation requires a greater level of supervision. A consistent inlet %TS can be left unattended for most of the day.
	Materials of construction:	SS-304 wetted parts Other Carbon Steel
	Other:	**One (1) Flocculation Tank** **One (1) Sludge Feed Pump** **One (1) Polymer System** **One (1) NEMA 4 Control Panel** **One (1) 20'x8' Marine Grade Aluminum Skid** **One (1) 23' Shaftless Screw Conveyor not attached to skid**
	Misc:	1 set standard tools 1 set drum covers w/ side shields 1 motor coupling, 4 spare screens
	Delivery:	Delivery within 6 (six) months after receipt of written purchase order

B. Miscellaneous

1. Delivery

On-site delivery will be within six (6) months after receipt of purchase order.

2. Shipping Arrangements

The FKC screw press skid will be shipped on a flat-bed trailer. Owner is responsible for unloading of the contents.

Unloading and erection services are not included in the FKC services quoted. Additional on-site services can be purchased at the rates listed in paragraph 13 below.

3. Equipment Summary

The following summarizes the equipment and pricing offered in this proposal:

Screw Press Model	FOB Bettaso WTP, CO
BHX-700x4000L with Skid	US$296,900

Pricing is FOB Bettaso WTP, CO and does not include taxes or bonding.

Pricing does not include a polymer tote, polymer hose/fittings, or disposal bin.

4. Effective Period

This proposal shall remain valid 60 days from the date of the proposal.

5. Payment Terms

30% with approval drawings & submittals
30% notice to proceed with manufacturing
40% with delivery

Net 30 days

It is understood that up to 10% of the total purchase price may be retained until performance criteria have been demonstrated and met.

6. Installation

The dewatering skid comes pre-piped and pre-wired. For shipping height purposes the flocculation tank and platform handrails are shipped loose and will require the customer to re-mount them to the skid. The flocculation agitator assembly and gearbox will also need to be re-set onto the flocculation tank.

The conveyor is shipped loose and will require customer erection along with power connection from the conveyor motor to the dewatering skid control panel.

Anchor bolts are not supplied by FKC for the skid to anchored to the concrete pad.

Utility, pipe, conduit and wiring connections will need to be made by the customer to the dewatering skid. The following connections will need to be made by the customer:

a) 1-1/4 inch NPT recycle water connection to screw press pan shower header
b) 1-1/2 inch NPT recycle water connection to screw press headbox shower header
c) 2-inch NPT recycle water connection to screw press drum shower header
d) 1-inch NPT potable water connection to polymer system
e) 1-inch NPT neat polymer connection to polymer system
f) 3-inch flanged sludge connection to sludge feed pump
g) 4-inch flanged filtrate connection to screw press
h) 3-inch NPT drain connection to flocculation tank feed pipe
i) 460V/3ph/60Hz/30A power supply to control panel

Installation and erection assistance are not included in the price of the equipment and generally are not required. However, the service is available for our standard service rates (see the enclosed rate sheet).

7. Operator Training and Start Up

Operator and maintenance training and start up services are included in the price of the equipment.

Operator and maintenance training can be accomplished in approximately two hours per group. Ideal training sessions include both classroom and on-site (at the screw press) sessions.

Generally speaking training and start up can be accomplished in a three day period.

A follow-up/performance testing visit of a two day duration is also included in the price of the equipment.

Erection assistance and a separate trip for training are not included in the price of the equipment. Additional engineering service days are billed at the rates on the enclosed rate sheet.

8. Warranty

FKC's mechanical warranty covers material and workmanship for a period of twelve (12) months from start-up or eighteen (18) months from delivery whichever occurs first.

9. Documentation Schedule

A. Approval Drawings - within 3 weeks after receipt of purchase order
   Buyer must return approval drawings within 14 days
   or delivery schedule will be affected
B. Certified Drawings - within 2 weeks after return of approval drawings
C. Operation and Maintenance Manuals - 14-16 weeks after receipt of order

10. Performance Guarantee

The performance figures and conditions denoted in section A of this proposal constitute FKC Co., Ltd.'s performance guarantee and the conditions required to meet the guarantee. All of the consistency figures are based on total solids (TS) not total suspended solids (TSS).

In the event that performance is not met, FKC will provide all parts, engineering, and labor associated with the work necessary to bring the equipment into conformance with the performance guarantee.

11. Exceptions to the Specification

Not applicable.

12. Spare Parts List

No spare parts are required for the first 1-2 years of operation. A list of long term spares in available upon request.

13. Service Rates

If required, round-trip airfare (coach class) from Port Angeles, WA to airport nearest work site.

<u>Weekdays</u>

$1000.00 - Per eight (8) hour day on weekdays plus, lodging, and rental car expenses.
$187.50 - Per hour for all hours exceeding eight (8) hour workday on weekdays.
$108.00 - Per hour for office engineering services and telephone consultations.

<u>Saturdays, Sundays and Holidays</u>

$1,440.00 - Per eight (8) hour day plus lodging and rental car expenses.
$270.00 - Per hour for all hours exceeding eight (8) hour workday.

<u>Travel Time - Weekdays</u>

$80.00 - Per hour travel time. (Not to exceed $990/day)

<u>Travel Time – Weekends and US Holidays</u>

$120.00 - Per hour travel time (Not to exceed $1,440/day)

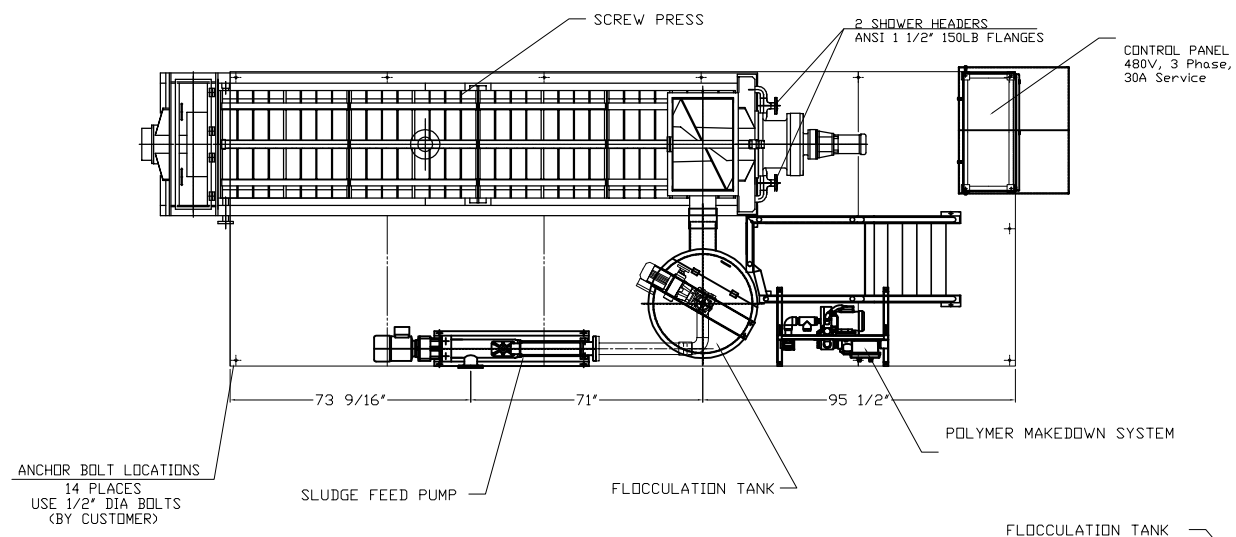

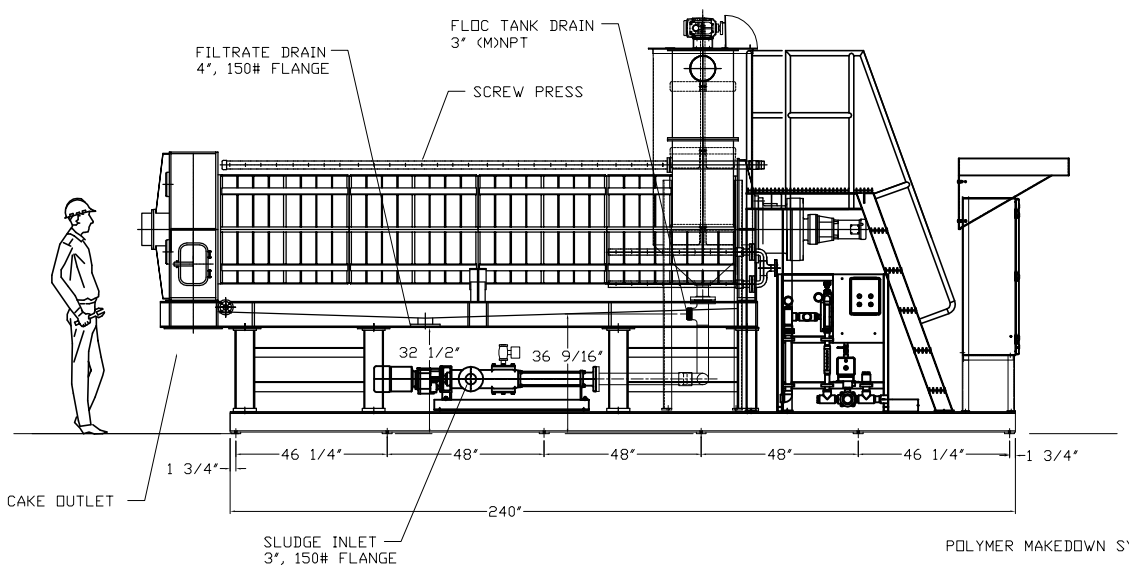

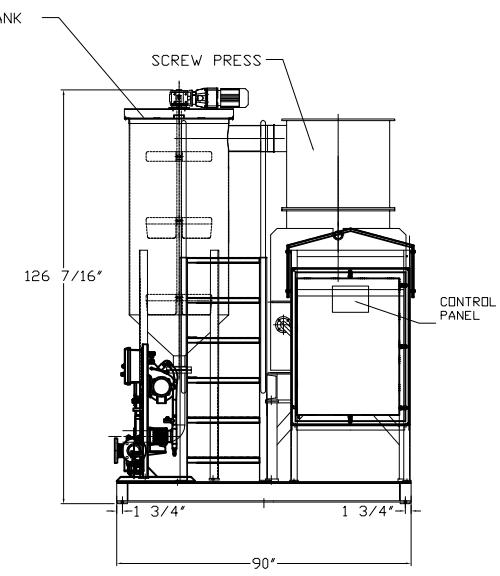

TOTAL SKID WEIGHT = 30,516 LBS

No.	Alteration	Date	Sign.

Mark	Description		Operating Weight lbs.
JOB No.	Messrs. Reference Only	Quantity	Scale 1/15
Drawing No. A294-900	Title BHX-700X4000L DEWATERING SKID	Date 09/17/09	
		Drawn by AH	
			Ref. JOB No.

FKC CO., LTD.
2708 W. 18TH ST.
PORT ANGELES, WA 98362
(360) 452-9472 FAX (360) 452-6880
SHEET 1 OF 1

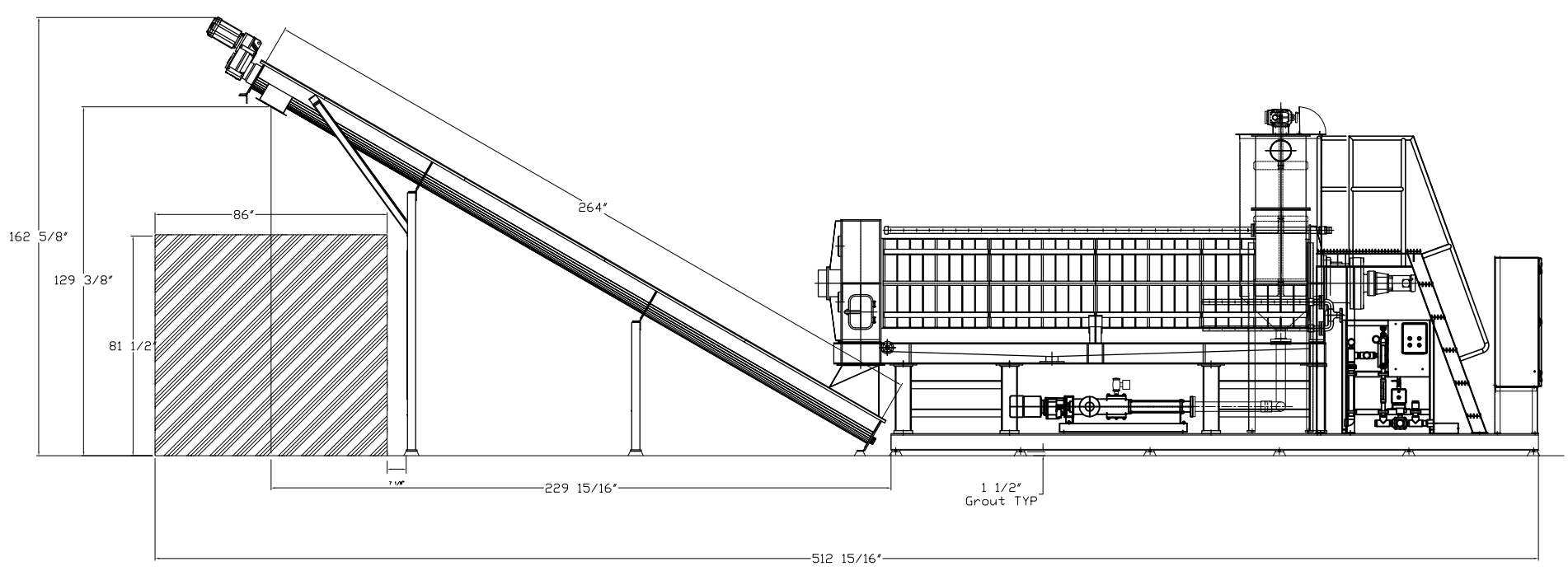

No.	Alteration	Date	Sign.

Mark	Description		Operating Weight lbs.
JOB No.	Messrs. Reference Only	Quantity	Scale
Drawing No. L294-901	Title BHX-700X4000L DEWATERING SKID CONVEYOR SIDE VIEW	Date 08/13/13	
		Drawn by RTB	
			Ref. JOB No.

FKC CO., LTD.
2708 W. 18TH ST.
PORT ANGELES, WA 98362
(360) 452-9472 FAX (360) 452-6880
SHEET 1 OF 1

Processed alum sludge Transport / pumping comments

There are three ways to think of dealing with the processes alum sludge if 6% to 9% total solids are achieved after polymer conditioning and dewatering:

- You can pump it from the process equipment to the drying beds.
    - This would be several hundred linear feet of pumping distance. 9% TS alum sludge is different than pumping other 9% sludges. It would be good to check with a pump manufacturer and give them the linear feet, number of elbows, size of pipe, etc. and see what they say about pumping.
    - Another option is to have a pump at the drying beds that pumps back the decant water up to the process equipment which would dilute the 9% sludge in a common hopper. The diluted sludge would then be pumped back to the drying beds without adding any additional water.
- You can haul it from the process equipment to the drying beds.
    - 55,000 to 60,000 gallons of sludge processed per week would result in a 6 to 9% TS sludge that would be around 6,000 to 9,000 per week. You could pump discharge to a 10,000 gallon truck during the week which would be parked close to the process equipment. On Friday you could move the truck from the process equipment to the drying beds and discharge into the drying beds. On Monday you would drive the truck back to the process equipment and begin processing again.
- You can move the process equipment to be close to the drying beds and then pump the liquid to the process equipment.
    - This would seem to be the preferred option. With the process equipment near the drying beds you could pump the 0.9% sludge the long distance. The 9% TS alum sludge could be pumped the short distance to any of the drying beds.

Attachment D: WWW DAFT Piloting Report

World water works

Clean Water and Energy from Wastewater

DATE: June 23, 2014
TO: Jamie Eichenberger, Brown and Caldwell
FROM: Scott Poe, World Water Works, Inc. (WWW)
CC: Jason Choate, WWW; Greg Parks, WWW
RE: WWW Pilot Testing Report – Betasso Water Treatment Plant

Dear Jamie,

Please find the following pilot testing report for the Betasso Water Treatment Plant.

- **INTRODUCTION:**
  A pilot treatability study allows the customer to understand the type and quality of the equipment proposed. It aids in the understanding in the operation of this equipment (although pilot operations are never as automated as full-scale systems). World Water Works gains valuable knowledge of the water process stream to be treated and can modify design recommendations based upon the results of the pilot treatability study.

  Dissolved Air Floatation (DAF) Description
  The www/IDEAL Dissolved Air Flotation (DAF) system removes suspended solids, fats, oils and greases, and other insoluble materials. The www/RESOURCE DAF achieves high rate removal efficiencies at a low operational cost by employing such proprietary techniques as: Progressive Water Extraction, Cross-Flow, Nikuni Dissolved Air, Lamella Plate Pack Design (not part of Pilot Unit; however, would be utilized in full-scale design), Cone Bottom Sludge Removal, Patent Pending Sludge Thickening Beach and proficient Hydraulic design.

  Dissolved Air Flotation (DAF) is the process whereby micro-air-bubbles cause suspended materials to float to the surface of a vessel to achieve liquid/solids separation. The wastewater first enters the low shear mixing pipe flocculator where coagulants and flocculants may be introduced to increase the particle size along with "whitewater." Whitewater is a mixture of a portion of the DAF effluent, which has been saturated with atmospheric air via the Nikuni air dissolving technology. The wastewater then enters the vessel across the length of the system. The velocity of the water is significantly reduced to maximize separation potential. Inside the vessel, the microbubbles, which have attached to the particle surface affect the particle density, cause the suspended solids to float to the surface where a chain and flight skim them from the surface into a top cone. With the Sludge Thickening Beach; additional dewatering is provided by a wedgewire screen with press section that allows for additional free water to drain from the float increasing %TS by up to 2X. The "clean" liquid is continuously removed at several points inside the vessel and passes over pipe weirs into an effluent box. From the effluent box, the wastewater gravity feeds out of the system.

4000 SW 113th St. ~ Oklahoma City, OK 73173 ~ 1-(405)-ANAMMOX

CONFIDENTIAL

World water works

Clean Water and Energy from Wastewater

- **SCHEDULE:**
  - Pilot Arrival: 5/27/14
  - Pilot Operations: 5/27/14 – 5/30/14

- **COMPONENTS:**
  - ROP-5 DAF System w/Sludge Thickening Beach
  - *Flowrate:* 0-5 gpm
  - Flocculant batch tank and feed system
  - Influent feed pump
  - Influent flow meter

- **Treatment Goals:**
  - *90% total suspended solids capture and 3% or greater sludge thickening.*

- **Chemical Recommended Dosage:**
  - *Per Chemtreat Jar Testing, the chemical dosage was as followed*
    Polymer: 50-100 ppm

- **Chemical Actual Dosage:**
  - *Pilot Chemical dosage was as followed*
    - *Polymer: 60 - 105 ppm @ 0.5% solution*

- **Testing:**
  - *The following analysis was performed during the course of the pilot testing*:
    - Performed on Grab Samples:
      - Influent TSS
      - % solids – Beach (Pre-Screen)
      - % solids – Screen (Post-Screen)
      - Effluent TSS
  - *Original System Design Parameters*:
    - Influent TSS <5,000 mg/l
    - Desired TSS Recovery >90%
    - Desired %TS Float (Pre Screen) >3%
    - Desired %TS Float (Post Screen) >5%

- **Results:**
  - *The following results were reported by Betasso WTP Team (All Data Received by WWW Post-Testing is included):*

		Flow	Polymer Feed	TSS, mg/l		%TS, %	
Date:	**Time:**	*GPM*	*ppm*	*Influent*	*Effluent*	*Before Screen*	*After Screen*
5/28/2014	10:00 AM	5	84	12,200	8,400	2.98	3.06
5/28/2014	12:30 PM	5	100	8,100	7,700	2.85	3.16
5/28/2014	2:20 PM	5	95	9,300	8,000	2.71	3.08
5/28/2014	4:00 PM	8	80	8,600	10,000	2.47	3.13
5/29/2014	3:30 PM	3	105	12,900	1,500	3.33	3.54
5/29/2014	5:00 PM	5	97.7	9,100	300	3.37	3.62
5/30/2014	12:00 PM	3	61	9,300	8,200	2.97	3.45

  - *Please note the following challenges that existed during the testing period:*
    - The influent solids were significantly higher than the design influent TSS of 5,000 mg/l. This resulted in multiple challenges:
      - Air:Solids Ratio: The design A:S ratio was much lower (1/2 or less than projected) of what was projected because of the significantly higher solids levels feeding the DAF System.
      - Polymers: WWW/Chemtreat performed testing prior to coming on-site for pilot testing to make sure chemicals would be available for the pilot period. However, upon arriving on-site it was found that the higher TSS levels than projected meant that the chemicals available for the test were not ideal.
      - Increased solids loading rate: The solids loading rate for this system was significantly higher than projected. WWW tried to correct this with lower flow rates; however, this further increased the chemical mixing difficulties in the system.
    - Chemical Mixing proved to be challenging. WWW attempted multiple chemical mixing methods on the pilot; those utilized on 5/29 worked the best and this was reflected in the results above.
    - Frail floc/float proved to be a challenge; this was related to the chemicals available for use during the testing period. Had stronger sludge been formed; the sludge thickening beach would have performed significantly better; however, as it was the solids tended to break apart and pass through the screen instead of showing any significant additional thickening.
    - Given the challenges presented above; WWW was happy with the results achieved on 5/29. Had there been additional time for testing, WWW feels we could have further replicated those results while improving the Post-Screen

results. In a full-scale system; all the above challenges could be addressed through proper Jar Testing and proper system design.

- *Full-Scale Pilot Considerations:*
  - A larger Nikuni Dissolved Air Pump would be utilized in order to provide a proper A:S Ratio.
  - More extensive jar testing would be done in order to identify a polymer that would work at higher solids levels and also provide a stronger float that would allow for better dewatering across the thickening screen. A coag-floc combination program may be explored in hopes of lowering over all chemical usage while providing a float that is more readily dewatered.
  - More extensive mixing would be provided for the DAF chemicals prior to entering the DAF Unit. This would help with both solids recovery and additional dewatering.
  - The DAF system sizing would be adjusted to provide a proper solids loading rate.

- **Chemical Supply:**
  - All chemicals supplied by Chemtreat. The chemical utilized was P835E

- **Installed Pilot Unit:**

- **Potential Full-Scale System Design:**
    - WWW would be happy to provide a Full-Scale system design if the following data could be provided to WWW:
        - Design Influent TSS:
        - Daily Volume for Thickening (GPD)
        - Amount of hours per day of operation desired (8 hrs, 16hrs, etc?)

Please feel free to contact Scott Poe at 405-204-8713 or via email at poe@worldwaterworks.com if you have any questions or need further information.

Best Regards,

Scott Poe

Scott Poe
World Water Works, Inc.

Attachment E: Hach Automated Polymer Dosing System

RTC113 ST-MODULE REAL-TIME SLUDGE THICKENING SOLUTION

Applications
- Wastewater

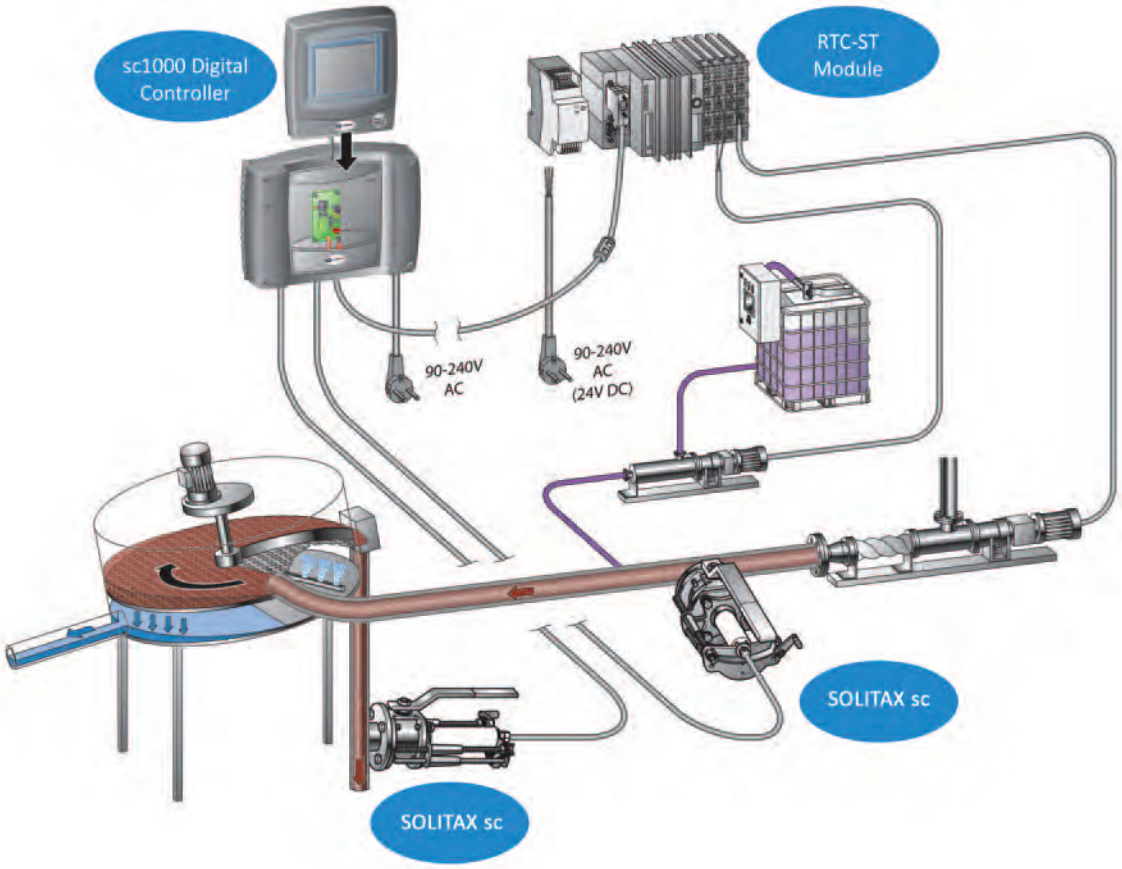

Sludge Thickening. Under Control.

Hach's off-the-shelf RTC-ST System adjusts the sludge thickening process in real time, improving thickened sludge consistency and gas production while reducing money spent on excessive polymer dosing and maintenance.

Improve Sludge Quality and Consistency

Adjusting sludge thickening based on real-time polymer dosing or sludge flow rates saves you money on polymer and improves gas production in the anaerobic digester. The RTC-ST system continually monitors sludge load and responds automatically to changes, keeping your system running smoothly and efficiently. Controlling your process has never been so simple.

An Off-the-Shelf System

RTC is a plug-and-play system that is ready to use after a very simple set up. Minimal downtime is needed to install the system and once installed Hach will help you configure your setpoints so you are fully prepared to monitor and treat your sludge in real time.

Save Money on Treatment

The RTC-ST module is preprogrammed with algorithms that adjust polymer or sludge flow rate to maintain your desired solids concentration. By treating only what's needed, you can ensure you don't spend more on chemical and handling costs than absolutely necessary.

Predictive Diagnostics

PROGNOSYS™ Predictive Diagnostics is included with the RTC System. Monitor the health and reliability of your instruments at a glance!

When We Say Service, We Mean Service!

Hach's complete service package includes routine maintenance visits and warranty repairs. A team of remote technical experts will monitor your system and send you reports so you know your system is working properly. It's like having a Hach Technician at your facility.

HACH®
Be Right™

Specifications*

SOLITAX sc, Highline

Measuring Range	0.001 mg/L to 500 g/L (SS)
Certifications	CE certified to EN 61326-1, EN 61326/A1, EN 61326/A2, EN 61010-1
Flow Velocity	3 m/s (9.8 ft./s) maximum
Operating Temperature	>0 to 40°C (>32 to 104°F)
Sample Temperature	>0 to 40°C (>32 to 104°F)
Dimensions	Insertion sensor (diameter x length): 60 x 315 mm (2.4 x 12.4 in.)
Weight	Insertion sensor (stainless steel): 2.4 kg (5.3 lb.)
Cable Length	10 m (33 ft.) standard Optional extension cables available in 7.6 m (25 ft.), 15.2 m (50 ft.), 30.5 m (100 ft.). Maximum total length: 100 m (328 ft.).

sc1000™ Controller

Power Requirements	100 to 230 Vac, 50/60 Hz Power: 75 W Optional: 24 Vdc
Relays	Up to four SPDT, user-configurable contacts rated 100 to 230 Vac, 5 Amp resistive maximum, per probe module. Additional relays are available with additional probe modules.
Inputs	Up to 12 analog 0-20 mA, maximum impedance 500 Ohms per probe module.
Outputs	Up to 12 analog 0/4-20 mA, maximum impedance 500 Ohms per probe module.
Control	PID, high/low phasing, setpoint, deadband, overfeed timer, off delay, and on delay
Alarms	Low alarm point, low alarm point deadband, high alarm point, high alarm point deadband, off delay, and on delay
Mounting Configurations	Surface, panel, and pipe (horizontal and vertical)
Dimensions	Probe module with attached display module: 315 x 250 x 142 mm (12.4 x 9.8 x 5.6 in.)
Weight	Approximately 6.5 kg (14.3 lbs.) depending on configuration
Certifications	North American Certifications: cTUVus to UL 61010A-1 and CSA C22.2 No. 1010.1 FCC ID QIPMC56 / IC ID 267W-MC56

RTC113 ST-Module

Processor	Pentium®†, MMX compatible, 500 MHz clock rate
Analog Input	4–20 mA
Number of Inputs	One-channel: 2 (analog), 2 (digital) Two-channel: 4 (analog), 2 (digital)
Analog Output	4–20 mA
Number of Outputs	One-channel: 2 (analog), 4 (digital) Two-channel: 4 (analog), 8 (digital)
Dimensions	One-channel: 191 x 120 x 9 6 mm (7.52 x 4.72 x 3.78 in) Two-channel: 227 x 120 x 9 6 mm (8.94 x 4.72 x 3.78 in)
Weight (approximate)	0.9 kg (1.98 lb)

**Subject to change without notice.*

†Pentium is a registered trademark of the Intel Corporation.

Principle of Operation

The RTC113 ST-Module outputs analog (0/4–20 mA) and digital (0/24 V) signals for the polymer dosing rate or the feed sludge flow rate to sludge thickening devices. Traditional operation of sludge thickening equipment relies on manual adjustment of polymer flow. Hach's off-the-shelf Real-Time Control System for Sludge Thickening (RTC-ST) controls polymer dosing in real time, helping you increase gas yield while saving you money on chemical and maintenance costs.

Designed specifically for use in sludge thickening devices (e.g. belt, gravity, dissolved air floatation or drum thickeners) the RTC-ST utilizes both an open- and closed-loop controller that continuously monitors influent total suspended solids (TSS) concentration and feed sludge flow rate to automatically adjust polymer dosing rates to meet your targeted thickened sludge concentration.

Ordering Information

STRTC1C Sludge Thickening Control System for 1-Channel
Includes RTC113 ST-Module, SOLITAX sc (x 2), and sc1000 with 6-sensor probe module and display

STRTC2C Sludge Thickening Control System for 2-Channel
Includes RTC113 ST-Module, SOLITAX sc (x 4), and sc1000 with 6-sensor probe module and display

Service Plan

FSPST-RTC Field Service Partnership for 1-Channel Sludge Thickening Control System

Covers the RTC113 ST-Module, SOLITAX sc, sc1000, Includes instrument support that covers all parts, labor and travel for on-site repairs, factory recommended calibrations and maintenance (including required parts).

FSPST-RTCC Field Service Partnership for 2-Channel Sludge Thickening Control System

Covers the RTC113 ST-Module, SOLITAX sc, sc1000. Includes instrument support that covers all parts, labor and travel for on-site repairs, factory recommended calibrations and maintenance (including required parts).

HACH COMPANY World Headquarters: Loveland, Colorado USA

United States: 800-227-4224 tel 970-669-2932 fax orders@hach.com
Outside United States: 970-669-3050 tel 970-461-3939 fax int@hach.com
hach.com

LIT2816
J13 Printed in U.S.A.
©Hach Company, 2013. All rights reserved.
In the interest of improving and updating its equipment, Hach Company reserves the right to alter specifications to equipment at any time.

Be Right™

Attachment F: Opinions of Probable Project Cost

Project: City of Boulder Betasso WTF Residuals Study
Date: 8//16/2014
By: Tony VanHaverbeke
Class: 5 (Planning-Level)

Total Project Cost Estimate (TPCE) Summary Sheet

Description	#	Units	Unit Cost	Total Cost
Summary of Construction Costs				
Equalization Tank	367	CY	$ 750	$ 275,000
Screw Press and Polymer Feed	1	EA	$ 180,000	$ 180,000
Thickened Sludge Pump	2	EA	$ 75,000	$ 150,000
Piping and Valves	1	LS	$ 150,000	$ 150,000
Building	1,040	SF	$ 250	$ 260,000
EI&C	15%	LS		$ 150,000
Site Work	1	LS	$ 50,000	$ 50,000
			Subtotal Construction Costs	**$ 1,200,000**
Year of Construction Estimate	2013			
Mid-Point of Construction	2016		Escalation Costs	$ 111,000
Escalation Rate	3.0%			
			Total Construction Costs	**$ 1,310,000**
Summary of Engineering Fees				
Engineering - Predesign	4.0%			$52,000
Engineering - Design & Bidding Services	8.0%			$105,000
Engineering - Construction	4.0%			$52,000
Resident Engineering	4.0%			$52,000
Post Construction Phase	2.0%			$26,000
Total Percentage	22.0%			
			Total Engineering Costs	**$290,000**
Summary of Administrative Costs				
Control System (included)	0.0%			$0
Land Acquisition	0.0%			$0
City Purchased Equipment	0.0%			$0
Miscellaneous	1.5%			$20,000
Material Testing	0.5%			$7,000
Total Percentage	2.0%			
			Total Administrative Costs	**$27,000**
Summary of Contractor Markups				
Overhead and Profit	9.0%			$118,000
General Conditions	10.0%			$131,000
Start-Up and Training	1.0%			$13,000
Insurance	2.0%			$26,000
Bonds	1.5%			$20,000
Total Percentage	23.5%			
			Total Administrative Costs	**$310,000**
			Total Costs	$ 1,937,000
Contingency	35.0%			$680,000
			Total Project Cost Estimate	**$ 2,600,000**

Project: City of Boulder Betasso WTF Residuals Study
Date: 8/16/2014
By: Tony VanHaverbeke
Class: 5 (Planning-Level)

Total Project Cost Estimate (TPCE) Summary Sheet

Description	#	Units	Unit Cost	Total Cost
Summary of Construction Costs				
Equalization Tank	367	CY	$ 750	$ 275,000
Gravity Belt Thickener and Polymer Feed	1	EA	$ 160,000	$ 160,000
Thickened Sludge Pump	2	EA	$ 75,000	$ 150,000
Piping and Valves	1	LS	$ 150,000	$ 150,000
Building	1,000	SF	$ 250	$ 250,000
EI&C	15%	LS		$ 150,000
Site Work	1	LS	$ 50,000	$ 50,000
			Subtotal Construction Costs	**$ 1,200,000**
Year of Construction Estimate	2013			
Mid-Point of Construction	2016		Escalation Costs	$111,000
Escalation Rate	3.0%			
			Total Construction Costs	**$ 1,310,000**
Summary of Engineering Fees				
Engineering - Predesign	4.0%			$52,000
Engineering - Design & Bidding Services	8.0%			$105,000
Engineering - Construction	4.0%			$52,000
Resident Engineering	4.0%			$52,000
Post Construction Phase	2.0%			$26,000
Total Percentage	22.0%			
			Total Engineering Costs	**$290,000**
Summary of Administrative Costs				
Control System (included)	0.0%			$0
Land Acquisition	0.0%			$0
City Purchased Equipment	0.0%			$0
Miscellaneous	1.5%			$20,000
Material Testing	0.5%			$7,000
Total Percentage	2.0%			
			Total Administrative Costs	**$27,000**
Summary of Contractor Markups				
Overhead and Profit	9.0%			$118,000
General Conditions	10.0%			$131,000
Start-Up and Training	1.0%			$13,000
Insurance	2.0%			$26,000
Bonds	1.5%			$20,000
Total Percentage	23.5%			
			Total Administrative Costs	**$310,000**
			Total Costs	$ 1,937,000
Contingency	35.0%			$680,000
			Total Project Cost Estimate	**$ 2,600,000**