COUNCIL BRIEFING
Flood Update
Tuesday, July 22, 2014
5-6 p.m.

BOULDER CITY COUNCIL MEETING
COUNCIL CHAMBERS, 1777 Broadway
Tuesday, July 22, 2014
6 p.m.

AGENDA

1. **CALL TO ORDER AND ROLL CALL**

   A. **ADA Declaration**

   B. **Declaration Honoring CFO Bob Eichem**

2. **OPEN COMMENT and COUNCIL/STAFF RESPONSE** (limited to 45 min.) Public may address any city business for which a public hearing is not scheduled later in the meeting (this includes the consent agenda and first readings). After all public hearings have taken place; any remaining speakers will be allowed to address council. All speakers are limited to three minutes.

3. **CONSENT AGENDA** (to include first reading of ordinances) Vote to be taken on the motion at this time.

   A. Consideration of a motion to **approve** the City Council Meeting **minutes from June 17, 2014**

   B. Consideration of a motion to **accept the May 13, 2014 study session summary on the 2014 Human Services Strategy Update**

   C. Consideration of a motion to accept the **June 10, 2014 study session summary on the Overview of the Library and Arts programs** and services and the Community Cultural Plan scope

   D. Consideration of a **motion to accept the May 27, 2014 study session summary on Envision East Arapahoe**

   E. Consideration of a **motion to authorize** the City Manager to accept **a U.S. Forest Service Special Use Permit for the Barker Gravity Pipeline**

F. Consideration of motion authorizing the City Manager to enter into **an intergovernmental agreement (IGA) with Boulder County to address jail overcrowding issues**

G. Consideration of a motion to approve an **amendment to the intergovernmental agreement (IGA) between the City of Boulder and Boulder County for additional funding for commercial energy efficiency rebates**

H. Second reading and consideration of a motion to adopt **Ordinance No. 7981 amending** Section 4-20-55, **"Court and Vehicle impoundment Costs , Fees, and Civil penalties,"** B.R.C. 1981, **changing certain court fees**, and setting forth related details

4. **POTENTIAL CALL-UP CHECK IN**
Opportunity for Council to indicate possible interest in the call- up of an item listed under agenda Item 8-A1.

ORDER OF BUSINESS

5. **PUBLIC HEARINGS**

A. Introduction, first reading and consideration of a motion to order published by title only, **an ordinance submitting to the registered electors** of the City of Boulder **at the** special municipal coordinated **election** to be held **on Tuesday, November 4, 2014**, **the question of amending City Charter Section 9 to provide that the city council may meet in executive session only for the purpose of discussing legal advice and negotiation strategy relating to the creation of a municipal electrical utility, with such authority ending on December 31, 2017**; setting forth the ballot title; and specifying the form of the ballot and other related details

B. Introduction, first reading and consideration of a motion to publish by title only **an ordinance submitting to the registered electors** of the City of Boulder **at the** special municipal coordinated **election to be held on Tuesday, November 4, 2014**, the question of authorizing the city council **to increase the sales and use tax by up to 0.3 cents on every dollar, effective from January 1, 2015 through December 31, 2017 for the purpose of funding a variety of capital improvement projects**; giving approval for the collection, retention and expenditure of the full tax proceeds and any related earnings, notwithstanding any state revenue or expenditure limitation; and setting forth the effective date, ballot title, amendments to section 3-2-5, "Rate of Tax," B.R.C. 1981and related details

6. **MATTERS FROM THE CITY MANAGER**

A. **Update of Public Art: Commencement of Community Dialogue**

7. **MATTERS FROM THE CITY ATTORNEY**

None

8. **MATTERS FROM MAYOR AND MEMBERS OF COUNCIL**

A. Potential Call-Ups

1. **Vacation of a 25 foot utility easement at 800 28th Street**. Information Packet Date: July 22. Last opportunity for Call-Up: July 22.

2. **Landmark Alteration Certificate for 730 Pine.** Information Packet Date: July 22. Last opportunity for Call-Up: July 22.

3. **Landmark Alteration Certificate for 1507 Pine.** Information Packet Date: July 22. Last opportunity for Call-Up: July 22.

9. **PUBLIC COMMENT ON MATTERS** (15 min.) Public comment on any motions made under Matters.

10. **FINAL DECISIONS ON MATTERS** Action on motions made under Matters.

11. **DEBRIEF** (5 Min.) Opportunity for Council to discuss how the meeting was conducted.

12. **ADJOURNMENT**

This agenda and the meetings can be viewed at www.bouldercolorado.gov / City Council. Meetings are aired live on Municipal Channel 8 and the city's Web site and are re-cablecast at 6 p.m. Wednesdays and 11 a.m. Fridays in the two weeks following a regular council meeting. DVDs may be checked out from the Main Boulder Public Library. Anyone requiring special packet preparation such as Braille, large print, or tape recorded versions may contact the City Clerk's Office at (303) 441-3002, 8 a.m. – 5 p.m. Monday through Friday. ***48 hours notification prior to the meeting or preparation of special materials IS REQUIRED.*** If you need Spanish interpretation or other language-related assistance for this meeting, please call (303) 441-1905 at least three business days prior to the meeting. *Si usted necesita interpretación o cualquier otra ayuda con relación al idioma para esta junta, por favor comuníquese al (303) 441-1905 por lo menos 3 negocios días antes de la junta.* Electronic presentations to the city council must be pre-loaded by staff at the time of sign up and will NOT be accepted after 3:30 p.m. at regularly scheduled meetings. Electronic media must come on a prepared USB jump (flash/thumb) drive and no technical support is provided by staff.

This Page Intentionally Left Blank

CITY OF BOULDER
CITY COUNCIL PROCEEDINGS
June 17, 2014

1. **CALL TO ORDER AND ROLL CALL –** 6:00 PM

Mayor Pro Tem Karakehian called the regular June 17, 2014 City Council meeting to order at 6:00 PM in Council Chambers.

Those present were: Council Members Jones, Karakehian, Morzel, Plass, Shoemaker, Weaver and Young. Council Member Young was absent and Mayor Appelbaum arrived at 6:55 PM.

Acting Mayor Karakehian announced that item 3H had been added to the Consent Agenda to cancel the July 15 meeting and schedule a special meeting for July 22, 2014 as four members of council would not be to attend July 15, 2014.

Council Member Morzel moved, seconded by Council Member Plass, to approve the agenda as amended. The motion carried 7:0, Council Members Appelbaum and Young absent. Vote was taken at 6:07 p.m.

2. **OPEN COMMENT and COUNCIL/STAFF RESPONSE** – 6:03 PM

1. Mary Ann Wilner – Spoke to contract employees of the City of Boulder not receiving any benefits.

2. Bob Yates – Spoke on behalf of the Boulder Historic Museum – encouraged ballot tax measure to include funding for the arts/museums.

3. Darren O'Connor – Spoke as a pro-rights citizen and expressed that he continued to support the rights of the homeless and did not understand the fear that was expressed by the community towards the homeless in Boulder.

4. Annette Coleman – Spoke representing NoBo Art District and its programs. She urged support for the NoBo Art District.

5. Claire Levy – Also spoke to the outsourcing of services by the city which resulted in lower wages and no benefits for contractors. She explained that this did not reflect the values of this community.

Council Member Morzel asked Ms. Levy if she had brought her concerns to the Human Relations Commission.

Ms. Levy indicated that she had not.

Council Member Morzel noted that the HRC would be discussing living wages later in the year. She suggested that Ms. Levy bring this information to their attention so the HRC could make a recommendation to Council.

City Manager Jane Brautigam responded that Dr. Wilner had brought information to staff late in 2013. She noted that the HRC would determine whether or not to make a recommendation to Council; she noted that the HRC was very interested in the topic of living wages.

Council Member Cowles thanked Ms. Levy for her work on the Planning Board and at the state legislature and then acknowledged the importance of the HRC taking up the policy on subcontractors.

6. Rob Smoke – Spoke regarding the fifth homeless person who died last weekend. He wondered if it was a choice or an illness if the death was the result of alcohol or drugs. He asked that decisions of policy be evidence based not judgment based.

7. Irene Rodriguez – Spoke as a citizen that had recently joined Boulder Rights Watch and reported that the group believed that police violence had increased in Boulder, particularly towards the homeless.

8. W. David Powell, III – Spoke as a homeless advocate, congratulated Chief Testa, then noted that there was a real atmosphere of fear in the community. He urged the community to work together.

9. Ted Ross – Spoke on behalf of the Colorado Ocean Coalition in opposition to the Gross Reservoir expansion.

City Manager Jane Brautigam noted that a recent information packet included the letter sent in response to the environmental impact statement. She also suggested that the letter would be made available to Mr. Ross.

10. Michael Fitzgerald- Indicated that he knew four of the five homeless people who had died. He thought it was time to have a homeless shelter 365 days a year.

11. Bill Obermeier- Executive Director of the Dairy Center for the Arts, spoke to the increased participation in the Arts programs. Urged the Pay As You Go measure to include funding for the Arts.

12. Dan Powers – Spoke to the importance of reconsidering the Flatirons Events Center noting the number of organizations that relied on that meeting space.

City Manager Brautigam introduced Greg Testa as the new Chief of Police for the city.

3. **CONSENT AGENDA** - 6:56 PM

A. **CONSIDERATION OF A MOTION TO APPROVE THE CITY COUNCIL MEETING MINUTES FROM MAY 20, 2014**

B. **CONSIDERATION OF A MOTION TO APPROVE THE CITY COUNCIL MEETING MINUTES FROM JUNE 3, 2014**

C. **CONSIDERATION OF A MOTION TO ACCEPT THE APRIL 29, 2014 STUDY SESSION SUMMARY ON THE TRANSPORTATION MASTER PLAN UPDATE**

D. **CONSIDERATION OF A MOTION TO ACCEPT THE MAY 27, 2014 STUDY SESSION SUMMARY ON THE COMPREHENSIVE HOUSING STRATEGY**

E. **INTRODUCTION, FIRST READING AND CONSIDERATION OF A MOTION TO ORDER PUBLISHED BY TITLE ONLY ORDINANCES SUBMITTING TO THE REGISTERED ELECTORS OF THE CITY OF BOULDER AT THE SPECIAL MUNICIPAL ELECTION TO BE HELD ON TUESDAY, NOVEMBER 4, 2014, THE QUESTION OF AFFIRMING THE CITY'S RIGHT TO PROVIDE HIGH-SPEED INTERNET SERVICES (ADVANCED SERVICES), TELECOMMUNICATIONS SERVICES, AND/OR CABLE TELEVISION SERVICES TO RESIDENTS, BUSINESSES, SCHOOLS, LIBRARIES, NONPROFIT ENTITIES AND OTHER USERS OF SUCH SERVICES AND SETTING FORTH RELATED DETAILS**

F. **INTRODUCTION, FIRST READING AND CONSIDERATION OF A MOTION TO ORDER PUBLISHED BY TITLE ONLY, AN ORDINANCE AMENDING SECTION 4-20-55, "COURT AND VEHICLE IMPOUND COSTS, FEES, AND CIVIL PENALTIES," B.R.C. 1981, CHANGING CERTAIN COURT FEES, AND SETTING FORTH RELATED DETAILS**

G. **CONSIDERATION OF A MOTION TO APPROVE A CONDUIT LEASE TO LEVEL 3 COMMUNICATIONS, INC.**

H. **CONSIDERATION OF A MOTION TO CANCEL THE JULY 15, 2014 COUNCIL MEETING AND SCHEDULE A SPECIAL MEETING ON JULY 22, 2014**

Council Member Plass moved, seconded by Council Member Jones, to approve Consent Agenda item 3A through 3H with Item 3E forwarding to second reading the ordinance that provided the broadest direct and indirect power regarding high speed internet services and telecommunications services as a ballot measure. The motion carried 8:0, with Council Member Young absent. Vote taken at 7:11 p.m.

4. **POTENTIAL CALL-UP CHECK IN** – 7:12 PM

No interest was expressed Item 8-A1 through A3.

ORDER OF BUSINESS

5. **PUBLIC HEARINGS** - 7:12 PM

A. **SECOND READING AND CONSIDERATION OF A MOTION TO ADOPT ORDINANCE NO. 7979 DESIGNATING THE BUILDING AND PROPERTY AT 2104 BLUFF ST. TO BE KNOWN AS THE**

KELSO HOUSE, AS AN INDIVIDUAL LANDMARK UNDER THE CITY'S HISTORIC PRESERVATION ORDINANCE. - 7:12 P.M.

OWNER/APPLICANT: CHAD AND KRISTEN WATSON

Marcy Cameron, Historic Preservation Planner presented on this item.

The public hearing was opened at 7:15 PM, there being no speakers the public hearing was closed.

Council Member Weaver moved, seconded by Council Member Morzel, to adopt Ordinance No. 7979 designating the building and property at 2104 Bluff St. to be known as the Kelso House, as an individual landmark under the city's Historic Preservation Ordinance. The motion carried 8:0, with Council Member Young absent. Vote taken at 7:20 p.m.

6. **MATTERS FROM THE CITY MANAGER** - 7:21 PM

A. **BOULDER CIVIC AREA IMPLEMENTATION OVERVIEW**

Boulder Civic Area Redevelopment Project Manager Paul Leef and Civic Area Project Manager Jody Tableporter, Boulder Civic Area Redevelopment Project Manager presented on this item.

Council Member Cowles asked for clarification regarding land use changes and the expansion of Canyon.

Mr. Leef responded that land use regulations would be addressed early in implementation.

Council Member Morzel asked if CDOT (Colorado Department of Transportation) had been informed of the proposed changes to Canyon.

Mr. Leef noted that there had been preliminary conversations, but nothing formal was being put in place.

Council Member Morzel cautioned that interactions with CDOT should begin early so any roadblocks could be worked through.

Council Member Weaver asked about the 13th Street area.

Ms. Tableporter responded that activation of the area would involve events and that staff was starting to engage business owners as partners in event planning. She also commented that discussions around redevelopment had not begun.

Council Member Weaver asked how the "pay as you go" model would work in relation to the Farmer's Market on 13th Street.

Ms. Tableporter responded that the Farmer's Market would play a major role in the redevelopment of outdoor platforms and 13th Street in general.

Mayor Appelbaum wondered what the schedule looked like for the work involving Canyon.

Senior Urban Designer Sam Assefa explained there would be stages to the project with the first priorities including engagement with CDOT in 2015.

Mr. Leef pointed out that critical scoping and budget work would also occur in 2015.

Council Member Weaver commented that he wanted to keep the Boulder Creek area and greenways as natural as possible in the process.

Council Member Shoemaker supported the idea of a children centered area involving the Boulder Creek, he also preferred to engineer the area in a way that was inviting to families.

Council Member Karakehian spoke about the positive impact the Downtown Ambassador program had been for citizens and visitors.

Mayor Appelbaum stated that he would like to work on the "pay as you go" approach and determine what parts of the project were feasible versus those that would not be included in the project.

Council Member Morzel agreed that there would be financial savings by making decisions early rather than choosing from concept plans.

Council Member Cowles commented on the complication of the location of the bandshell and stated that consideration would have to be given to whether or not to move the landmark.

Council agreed with the general direction for implementation as presented by staff. Next steps would include going forward with a request for qualifications (RFQ) for master site planning, formation of work groups around major capital projects and initiating the timeline proposed.

B. **DISCUSSION OF POTENTIAL BALLOT ISSUES –** 8:08 p.m.

Chief Financial Officer Bob Eichem presented on this item, he reviewed the "pay as you go" program, flood related projects, and other items of interest to Council.

Council Member Morzel asked if the city owned the lighting on The Hill and if Xcel Energy supplied the power.

DUHMD Executive Director Molly Winter explained that the city owned the pedestrian scale lighting in the district. She noted that part of the proposal was to power those lights by solar and add additional lighting in residential areas within the district.

City Attorney Tom Carr added that the city was required to maintain the transportation related lights in the district.

Council Member Morzel asked if the city would be able to determine the power source for additional pedestrian lighting in The Hill district.

Ms. Winter responded affirmatively.

Council Member Plass asked for further clarification on the Flatiron Event Center and if there were options in the middle area between tearing it down and completely remodeling the venue.

Acting Parks Director Jeff Dillon explained the study that had been commissioned regarding the Flatiron Event Center. He commented on the deteriorating condition of the site over time and the energy consumption of the building. He noted that the amounts given to Council were to tear it down due to the high costs of bringing it up to code. He also remarked that bringing it up to code would not include ADA accessibility.

Council Member Cowles asked if the cost of a new community events center had been explored.

Mr. Dillon recalled a previous study including an events center and golf course that included a large commercial kitchen. He explained that the cost of the kitchen alone was well over a million dollars and the event center would be an additional $1.5 million. He explained that a facility meeting all the desires of the community could be built for $2.2 million without a commercial kitchen. Mr. Dillon also discussed other site plans in progress that would provide a commercial kitchen.

Council Member Cowles commented that he would like to see a public process around outdoor lighting prior to putting a measure on the ballot to fund a lighting project.

Council Member Jones wondered how the Civic Use Pad might meet the needs of the community without building an entirely new facility.

Ms. Winter explained that the next step would involve outreach to user groups to determine as best possible what the community needs were and if the rental requirements would be reasonable for those users if the city built it.

Council Member Jones asked if those discussions had begun.

Mr. Dillon responded that initial conversations involved concerns around parking, but more robust conversations were yet to occur.

Council Member Plass asked when Council would receive information on the size and scope of the project and if more information would be available before the election.

Ms. Brautigam responded that the information would not be available.

Council Member Weaver asked if the city had a good handle on the cash flow for the various scenarios.

Mr. Dillon responded that there was previous financial work that would have to be updated because of changes in the building industry and a decline in the golf industry.

Council Member Karakehian commented that he had not experienced a problem with parking at the Flatiron Events Center. He stated he was concerned about both options presented to Council. He wanted to find a way to provide meeting space at a reasonable price to the community and non-profits.

Council Member Morzel commented that knowing about new facilities with commercial kitchens coming online should help in updating the scope of providing a community events space.

Mayor Appelbaum agreed that remodeling Flatiron Events Center did not seem like a wise investment and he was in favor of considering other locations that were already in place. He preferred to direct staff to find available funding for demolition of the site rather than including it in a bond issuance. He agreed that updated financial information on building a new location should be brought back to Council. He expressed concern that there would be too few projects proposed for a ballot issue in 2014. He also agreed with the comments of fellow council members regarding the Boulder Creek Path.

Council Member Karakehian remarked on the need for better lighting on the Boulder Creek Path near Boulder High School.

Council Member Morzel expressed a desire to widen the path in the Civic Area due to the high volume of pedestrian and bicycle traffic.

Mayor Appelbaum agreed that the path should be widened because the Civic Area was a big connection point. He commented that he would like to see smaller projects that could be wrapped into the bond issue.

Ms. Brautigam noted that she had discussed the idea of a playground at Boulder Reservoir and other playground improvements that might be included.

Mayor Appelbaum questioned whether or not those projects were high enough priority.

Ms. Brautigam mentioned other projects that were in the works that would not be able to be completed in the three-year timeframe required by a bond issuance.

Mayor Appelbaum suggested doing a tax increase of 2/10ths for two years rather than three years to enable the city to move on other projects when they were ready for implementation.

Council Member Weaver commented that two years might be too short for the proposed projects and supported a three-year bond issuance. He supported the additional lighting on

the hill and agreed that less expensive options should be explored. He also supported the demolition of the Flatiron Events Center.

Council Member Shoemaker agreed with Council Member Weaver's comments. He thanked staff for their outreach on The Hill to get input from students and businesses. He also supported exploration of alternative energy sources for lighting on The Hill.

Council Member Jones also supported additional lighting on The Hill and the Civic Area project. She did not support redevelopment of the Flatiron Events Center and preferred to pursue demolition.

Council Member Morzel agreed with the comments of her colleagues.

Council Member Plass also agreed with moving forward with lighting on The Hill with the caveat that less expensive options should be explored, Civic Area project implementation, and demolition of the Flatiron Events Center.

Council Member Karakehian agreed with Council Member Plass's comments.

Mayor Appelbaum questioned whether or not it was appropriate for bond funds to be spent on demolition of a building and expressed that he preferred to find the funding elsewhere.

Ms. Brautigam commented that staff would bring back more information on the exact percentage of the tax required to fund the programs discussed through a bond issuance. She noted that Chautauqua and The Dairy Center requests would come back for further consideration. Staff was also recommending that The Museum of Boulder receive matching funds on a dollar for dollar basis to assist in raising the funds necessary to build and that the city should not be the owner of the building. She pointed out the problems that can arise in a landlord/tenant relationship when the city was involved.

Mr. Eichem spoke to the increased operating costs involved in owning a building.

Council Member Plass noted that he was in agreement with the staff recommendations.

Council Member Morzel also expressed approval of the recommendations.

Mayor Appelbaum noted that he was in agreement on postponing the funding for Chautauqua, but worried about moving forward with other projects before the Cultural Plan was adopted. He wanted to ensure Council knew all the options. He also recalled funding issues The Dairy Center had experienced when it was first coming to fruition and was concerned there would be additional needs associated with the project.

Ms. Brautigam noted that bond issuances required the city to complete bond projects in a specified timeframe.

Council Member Weaver noted that the museum was part of the cultural plan and he thought they would be good investments in Boulder's future.

Council Member Cowles agreed with the comments about the museum. He supported the recommendation of staff regarding the matching funds for completion of the museum.

Council Member Weaver also agreed with staff recommendations regarding Chautauqua and The Dairy Center.

Council Member Karakehian expressed that he was concerned that the project to underground utilities at Chautauqua was not moving forward. He did agree that it was important to understand the funding requirements.

Council Member Cowles commented that the project of purchasing an interest in Long's Gardens was still of interest to him.

City Attorney Tom Carr pointed out that an offer was made on Long's Gardens in 2013 and the response from the owners was the property was not for sale. He noted that the owners were only interested in an agricultural easement. He did not believe the expense involved in creating an agricultural easement was not in the best interest of the city.

C. **2014-2015 WORK PLAN UPDATE**

City Manager Jane Brautigam presented on this item, she reviewed the progress on work plan items that were in progress and completed to date.

Council recognized the hard work staff had been doing to complete the 2014-2015 work plan.

7. **MATTERS FROM THE CITY ATTORNEY** - 10:00 PM

None.

8. **MATTERS FROM MAYOR AND MEMBERS OF COUNCIL** – 10:00 PM

A. **POTENTIAL CALL-UPS**

1. **CEAP BASELINE ROAD UNDERPASS INFORMATION PACKET DATE: JUNE 17 LAST OPPORTUNITY FOR CALL-UP: JUNE 17**

No action was taken on this item.

2. **EASEMENT VACATION TO VACATE A 25 FOOT UTILITY EASEMENT RUNNING EAST-TO-WEST THROUGH THE MIDDLE OF THE PROPERTY AT 800 28TH STREET INFORMATION PACKET DATE: JUNE 17 LAST OPPORTUNITY FOR CALL-UP: JUNE 17**

No action was taken on this item.

3. **VACATION OF A 25-FOOT DRAINAGE AND UTILITY EASEMENT AND A 20-FOOT DRAINAGE EASEMENT AT 0 KALMIA AVE. TO ALLOW FOR THE CONSTRUCTION OF THE WONDERLAND CREEK TOWNHOMES PROJECT. INFORMATION PACKET DATE: JUNE 17 LAST OPPORTUNITY FOR CALL-UP: JUNE 17**

No action was taken on this item.

9. **PUBLIC COMMENT ON MATTERS** – 10:00 PM

None.

10. **FINAL DECISIONS ON MATTERS** – 10:00 PM

None.

11. **DEBRIEF** – 10:00 PM

Council Member Plass commented on the great experience he had at Airport Day over the previous weekend.

Council Member Weaver agreed that Airport Day was a success and mentioned the hard work of those air lifting victims during the 2013 flood event.

12. **ADJOURNMENT**

There being no further business to come before Council at this time, BY MOTION REGULARLY ADOPTED, THE MEETING WAS ADJOURNED on June 17, 2014 at 10:00 PM.

Approved this ___ day of _____, 2014.

APPROVED BY:

_____
Matthew Appelbaum
Mayor

ATTEST:

_____
Alisa D. Lewis
City Clerk

CITY OF BOULDER
CITY COUNCIL AGENDA ITEM

MEETING DATE: July 22, 2014

AGENDA TITLE: Consideration of a motion to accept the May 13, 2014 study session summary on the Human Services Strategy Update.

PRESENTERS
Jane S. Brautigam, City Manager
Karen Rahn, Director, Human Services
Wendy Schwartz, Human Services Planning Manager

EXECUTIVE SUMMARY

This agenda item presents a summary of the May 13, 2014 Study Session on the Human Services Strategy Update. The study session memo can be found here.

The purpose of the study session was to:

1. Request council feedback on the proposed process, timeline and benchmarks for the update to the Strategy; and
2. Present background information on key issues.

STAFF RECOMMENDATION

Suggested Motion Language:
Staff requests council consideration of this matter and action in the form of the following motion:

Motion to accept the May 13, 2014 Study Session Summary on the Human Services Strategy Update

NEXT STEPS

1. Homelessness Update Study Session, Aug. 26, 2014
2. Human Services Strategy Study Session, Dec. 9, 2014

ATTACHMENTS

Attachment A: May 13 Human Services Strategy Study Session Summary
Attachment B: Front Range Cities Homeless Housing and Services Analysis
Attachment C: Countywide Capital Homeless Housing Investment

City Council Study Session Summary
May 13, 2013
Human Services Strategy Update

PRESENT
City Council: Mayor Matt Appelbaum, Andrew Shoemaker, Macon Cowles, George Karakehian, Tim Plass, Sam Weaver, Suzanne Jones, Mary Young

Staff Presenters: City Manager Jane Brautigam, Human Services Director Karen Rahn, Human Services Planning Manager Wendy Schwartz

PURPOSE
The purpose of the study session was to provide an update on the proposed process, timeline and benchmarks for the update to the Human Services Strategy (HS Strategy, formerly Master Plan), present background information to inform the discussion and get council feedback on the key process elements.

OVERVIEW OF PRESENTATION
Karen Rahn opened the meeting and provided an overview of:

- Purpose and background for the HS Strategy update;
- Proposed process timeline and benchmarks; and
- Current HS policy direction.

Karen Rahn also provided background on the following:

- Three phases of the update: Phase I Background Research (September 2013 – June 2014), Phase II Analysis and Policy Options (July, 2014 – March, 2015), Phase III Final Plan and Approval (March 2015 – June 2015).
- Stakeholder and public process will be ongoing in Phase I and II.
- Boulder city and county roles, which are similar to those of many other jurisdictions across the country. The county provides the primary safety net, as a state subdivision, and also offers a broad range of prevention and intervention services and funding.
- The city charter does not mandate provision of human services, although the city has a long history of partnerships and community support in providing and supporting human services.
- Current guiding principles, priorities, and roles.

Wendy Schwartz presented information about background research completed during Phase I of the HS Strategy process, including:

- Department resource allocation by role and issue/population categories:
    - Of the department's $6.76M budget, 87 percent is from the GF and 13 percent if from grants and contracts from outside the city. Fifty-one percent is allocated to programs provided directly (primarily children, youth and family and senior services); 41 percent is allocated to community nonprofit funding; and eight percent is allocated to human services planning, research and partnering with

other entities and the community to address a broad range of human services issues.
  - The department's resources cover a broad range of issue areas. A few human services issue areas, such as employment, economic mobility, active living and health have limited HS involvement, currently.

- An update on the city partnership with the county, city of Longmont, and Foothills United Way to launch a joint online grant management system and application. The funding entities have developed common impact areas and indicators for key human service issues;
- Key local and national human services trends;
- National models and themes in addressing human services issues, including Collective Impact and Pathways; and
- Review of human services structure in other cities. Overall human services are individual and unique in cities, with no mandated municipal role. City human services structure and policies are based on community needs, values and local resources.

Karen Rahn reviewed key issues and updates in homelessness and potential strategies:

1. The TYP Board is shifting focus and work plan to have much stronger involvement in regional issues, including housing;
2. A consultant has been hired by service providers to assess service coordination between Boulder Shelter for the Homeless (BSH), Boulder Outreach for Homeless Overflow (BOHO) and Bridge House (BH);
3. Discussions are underway with the Metro Denver Homeless Initiative (MDHI) regarding expanding partnership and support to Boulder community;
4. Boulder is partnering with Denver's Road Home and Metro Denver Homeless Initiative to participate in a coordinated assessment and housing placement pilot program for veterans and chronically homeless people (25 Cities Initiative).

Potential strategies for the development of a Homeless Action Plan (HAP), include:

1. Strengthen regional relationships and implement regional solutions for transitional and permanent housing to meet gaps;
2. Facilitate development of integrated services system, (including coordinated entry, assessment and case management);
3. Increase supply of affordable housing for the homeless through review of land use regulation and identify and pilot innovative solutions to increase countywide housing and service options;
4. Promote and facilitate the creation of a community-wide shared data system and outcome measures;
5. Expand community education/engagement on homeless issues across sectors; and
6. Develop priorities for city funding for homeless services.

COUNCIL DISCUSSION

The following general ideas and themes emerged from council discussion:

- HS resources support a very broad range of populations and issue areas. Council members suggested focusing limited resources on supporting fewer priority areas to have greater impact in key areas.
- The HAP should include strategies to engage other cities in addressing homelessness. The Consortium of Cities is one forum to involve all cities and towns in the county to provide resources to support countywide homeless services.
- The city should expand its leadership role and use its leverage as a funder to improve the human services system, including the homeless services system.
- The city should expand its efforts to educate the community about homelessness. Homeless people should tell their stories to help educate the community.
- Boulder has a commitment to helping people experiencing homelessness. The city needs to consider how city resources can best be utilized and how other resources in the region can be leveraged for long-term solutions.
- Include a wide range of city residents in the HS Strategy stakeholder process, in addition to human services agencies.
- Use experts to help craft policy options.

HS Strategy

- Direction and process for HS Strategy update are on right track.
- Ensure processes and human services are culturally competent.
- The Latino Task Force, Area Agency on Aging, Denver Regional Council of Governments, and Naropa should be added to the stakeholder list for HS Strategy public consultation.
- Continue to engage the county as a key partner to understand best options for increased partnership and leveraging.
- Consider health and income status of older adults in Boulder when planning for service needs.
- Consider including healthy/active living, local food access.

Human Services Resource Allocations

- If the city chooses to narrow the focus of HS resources, it should consider implications for programs traditionally supported that are no longer in focus areas.
- Continue to consider prevention in mix and maximizing potential benefits of models such as Collective Impact and Pathways.
- HS funding does not include resources the city allocates through U.S. Department of Housing and Urban Development (HUD) and Inclusionary Housing revenues on affordable housing. Depending on the framing of the analysis, the city spends more on homeless and at-risk individuals and families than the HS allocations may reflect.

Homelessness

- The Boulder County Ten-Year Plan (TYP) to Address Homelessness priority on providing Housing First represents an overall net savings to the community. Emergency medical and jail costs are challenging to capture, since data in those systems is not based on housing status. It is important to work with partners in health care and the justice system to assess and address these costs to the degree possible.
- Council supports the city taking a leadership role and moving on the HAP quickly.
- The Boulder community identified homelessness, along with affordable housing and safety as priority issues in the community survey.
- Consider prioritization for services based on vulnerability, residency or other relevant factors.
- Tie funding priorities with strategies to help people exit homelessness.
- Use experts to help clarify the city's role in homeless services and recommend cost-effective investments.

Requested Follow-up Information

The mayor requested information about Front Range cities' investments in human services and housing for people who are homeless or at-risk for homelessness. This information is included as **Attachments B and C.** Attachment B is basic needs and emergency services. A caveat for this data is the information is comprehensive for the City of Boulder, but may be incomplete for other cities. Data which was easily discernible from published city budgets was used for the comparison.

Attachment C includes capital investments for the years 2008-2013. In 2014, the City of Boulder also invested $1.2M for Bridge House transitional housing for the Ready-to-Work program (48 beds) and $45K to Emergency Family Assistance Association for four transitional housing units for families on Yarmouth.

Select Front Range City 2012 Expenditures on Basic Needs and Emergency Services for At-Risk and Homeless

	City of Boulder Awards <1>	City of Longmont Awards	City of Lafayette Awards	City of Louisville Awards	City of Superior	City of Arvada	City of Fort Collins	City of Westminster	City of Colorado Springs <2>
Homelessness Prevention Assistance - to People at Imminent Risk of Homelessness									
Boulder Outreach for Homeless Overflow (BOHO - Recuperative Care)	$ 5,000								
Homelessness Prevention Initiative							$ 45,000		
Northern Colorado AIDS Project							$ 15,000		
Salvation Army									$ 113,130
Urban Peak									$ 14,130
Basic Needs / Emergency Services - to People Who are Experiencing or At Risk of Homelessness									
(Jefferson County) Action Center						$ 5,500			
Arvada Community Food Bank						$ 15,000			
Care and Share Food Bank									$ 17,613
Carin' Clinic						$ 17,000			
Catholic Charities of Colorado							$ 15,000	$ 5,000	
Center for People with Disabilities		$ 10,000							
Clinica Family Health Services	$ 350,000		$ 2,200	$ 5,000				$ 9,000	
Community Food Share	$ 5,000	$ 30,000		$ 2,500					
Community Health Centers								$ 9,000	
Dental Aid	$ 99,906	$ 12,000		$ 1,000					
Disabled Resource Services							$ 23,370		
Ecumenical Social Ministries - low income household assistance									$ 5,000
EFAA (Basic Needs)	$ 53,750								
Family Tree						$ 5,000			
FISH								$ 5,500	
Food Bank for Larimer County							$ 21,407		
Food Bank of the Rockies						$ 6,000		$ 4,500	
Have a Heart Project								$ 5,000	
Inter-Church Arms						$ 10,000		$ 1,500	
Interfaith Hospitality Network - homeless families assistance									$ 5,000
Internet service to low income residents with children		$ 7,425						$ 6,500	
Jefferson Center for Mental Health						$ 16,000			
Krupaick Counseling Services - mental health, referrals for homeless, poverty		$ 33,495							
Larimer Center for Mental Health							$ 38,380		
The Matthews House							$ 27,000		
Meals on Wheels, Boulder	$ 75,000								
Meals on Wheels, East County			$ 2,600	$ 2,000					
Meals on Wheels, Longmont		$ 36,000							
Mental Health Partners	$ 433,654	$ 111,641							
Mental Health Partners - Family Resource Schools	$ 137,681								

	City of Boulder Awards <1>	City of Longmont Awards	City of Lafayette Awards	City of Louisville Awards	City of Superior	City of Arvada	City of Fort Collins	City of Westminster	City of Colorado Springs <2>
Project Self-Sufficiency							$ 22,000		
Rehabilitation and Visiting Nurse Association							$ 33,450		
Rise Program - anti-poverty self-sufficiency		$ 48,970							
Salud Clinic		$ 20,000							
Sister Carmen Community Center			$ 2,200	$ 2,500	$ 3,200				
St Benedict Health/ Healing Ministry			$ 2,200						
STRIDE						$ 5,000			
The Women's Resource Center							$ 34,802		
United Methodist Church - Food Bank				$ 1,000					
VOA - Meals on Wheels						$ 10,000	$ 29,200		
Outreach Services									
Boulder Shelter (Boulder County Cares)	$ 15,000								
Homeless Outreach Providing Encouragement (HOPE), Longmont		$ 10,000							
Homeward Pikes Peak (Homeless Outreach)									$ 11,350
SPAN - outreach counseling & community education	$ 38,070								
SPAN - Violence Prevention Education Program for Children & Youth	$ 8,505								
Day Shelter/Services/Programs									
Bridge House	$ 17,257								
EFAA - Shelter Program (Emergency Shelter & Transitional Housing)	$ 53,750								
OUR Center, Basic Needs		$ 59,932							
Total Basic Needs & Emergency Services Expenditures	**$ 1,292,573**	**$ 379,463**	**$ 9,200**	**$ 14,000**		**$ 89,500**	**$ 304,609**	**$ 46,000**	**$ 166,223**
2012 City Populations<3>	99,177	86,355	24,753	18,646	12,407	106,965	144,329	106,750	417,534
Per Capita Expenditures	$ 13.03	$ 4.39	$ 0.37	$ 0.75	$ -	$ 0.84	$ 2.11	$ 0.43	$ 0.40

<1> City of Boulder funds are allocated through Human Services Fund and other contracts except as noted.

<2> Estimates for Colorado Springs are based on data gathered for 2013 from internet searches. Information available on the city's websites may not reflect all investments.

<3> Source: Census Bureau, American Community Survey, 2008-2012 5-Year Estimates. University population is included for all cities, though university students are seldom users of the type of community services captured in this spreadsheet.

Information is comprehensive for the city of Boulder, but may be incomplete for other cities. Data which was easily discernable from published city budgets was used for the comparison.

Countywide Homeless Housing Investment* in Increasing Shelter, Transitional Housing and Permanent Supportive Housing Supply, 2008-2013

Consortium Funder/ Project	Year	Fund	Amount 2008-2013	Activity	Type of Housing	# of additional beds provided/people sheltered or housed
Boulder County						
Project-Based Vouchers for Aspinwall at Josephine Commons	2013	HUD	$210,000	Homeless/at-risk families in Boulder County self-sufficiency programs.	Permanent Housing	24 units - in development, not yet available
Inn Between Longmont	2013	Boulder County Worthy Cause Funds	$322,000	Renovations and debt reduction on 230 Coffman St., Longmont	Transitional Housing with support services/case management	13 three-bedroom units, 4 two-bedroom units***
EFAA Transitional Housing	2012	Boulder County Worthy Cause Funds	$546,075	Purchase of 14 units located at 1606 Garfield Ave., Louisville	Transitional Housing for families with support services	10 two-bedroom and 4 one-bedroom units (8 units transitioning from market rate as current tenants move)
Veterans Affairs Supportive Housing (VASH)	2012/2013	HUD/Veterans Affairs	$638,400	Housing Choice Vouchers (formerly Section 8) for chronically homeless veterans & families	Permanent Housing	35 households/year
Boulder County Short-Term Housing Program	2012/2013	Temporary Safety Net Funds	$240,000	Short-term housing for homeless families in child protection	Transitional Housing (3 to 12 months)	12 units
Family Unification Program (FUP)	2012/2013	HUD	$1,080,000	Housing Choice Vouchers for homeless youth transitioning out of foster care and homeless families involved in child protection	Permanent Housing for families; Transitional Housing for transitioned age youth (18-month voucher)	50 households/year
Tenant-Based Rental Assistance Program (TBRA)	2012/2013	CO Division of Housing, Dept of Local Affairs	$784,422	Tenant-Based Rental Assistance (TBRA) for families with school-aged children who are homeless/at risk	Transitional Housing (2-year "coupon"/voucher)	approximately 45 households/year
Transitional Housing for SPAN (Safehouse)	2011	Boulder County Worthy Cause Funds	$160,000	For clients of SPAN	Transitional Housing (up to 2 years)	4 units

Boulder Housing Partners	2010	Boulder County Worthy Cause Funds	$832,150	Lee Hill Housing First project for chronically homeless	Permanent Supportive Housing	31 units*** - in development. Not yet available.
Housing Stabilization Program	2008 to 2013	Local funds received from Boulder County 1A initiative	$5,700,000	Funding for households who need help paying their security deposit and rent. Approximately half are homeless and half at risk.	Homelessness Prevention to enable Permanent Housing (primarily security deposits and rental assistance)	Approximately 180 households/year
Total Boulder County			**$10,513,047**			
City of Boulder						
Attention Homes, Emergency Shelter	2013/2011	Affordable Housing Fund	$143,235	Material, labor and soft costs for remodel and expansion of youth shelter at 3080 Broadway	Emergency Shelter	Six beds (capacity increased from 10 to 16 beds)
Boulder Housing Partners, Housing First	2013	Affordable Housing Fund	$1,600,000	New construction @1175 Lee Hill for chronically homeless	Permanent Supportive Housing	31 units*** - in development. Not yet available.
	2011	HOME	$300,000	Pre-development costs for Lee Hill housing first development for chronically homeless		
	2010	HOME	$121,000	Pre-development costs for Lee Hill housing first development for chronically homeless		
Boulder Housing Partners, Tenant-Based Rental Assistance (TBRA)	2008	HOME	$18,000	Housing vouchers for single adults	Permanent Housing	4 people
SPAN	2008/2012	Affordable Housing Fund	$594,911	New construction for victims of domestic violence	Emergency shelter and transitional housing	10 beds (capacity increased from 17 to 27)
Total City of Boulder			**$2,777,146**			
City of Longmont						
Inn Between Longmont	2011-2013	Longmont HOME funds	$513,612	Acquisition and rehab of 230 Coffman	Transitional Housing with support services/case management	13 three-bedroom units, 4 two-bedroom units***
Tenant-Based Rental Assistance Program (TBRA)	2008-2012	Longmont HOME funds	$313,159	Tenant-Based Rental Assistance (TBRA) for families/individuals who are homeless	Transitional Housing (2 year coupon/voucher)	42 households total

Critical Housing Opportunities Program (CHOP)	2010-2013	Longmont General Funds	$279,400	Mix of tenant based rent assistance and place based assistance at Suites and Briarwood	Winter Transitional Housing (6-9 months) for families/individuals who are on street and at-risk	53 households through 2012
Rent Deposit Program	2008-2010	Longmont CDBG funds	$10,370	Rent and/or utility security deposits	Assistance to homeless, working families/individuals who can afford rent, but cannot save for deposits	41 households served in total
Agape Family Services	2010-2013	Longmont General Funds	$56,350	Operating costs for warming center rotating between 3 church facilities	Warming Center providing overnight shelter when weather is inclement	40 beds on any given night
The Suites	2011	Longmont Affordable Housing Fund, CDBG funds	$621,000 (total project cost was $6.5 million)	Acquisition and rehab of former extended stay hotel	Permanent supportive housing	71 units; 13 two bedroom and 58 one bedroom units
Total City of Longmont			**$1,793,891**			

Total Countywide Emergency Shelter Beds Inventory as of 2013	**493**
Total Countywide Transitional Housing Units/Vouchers Inventory as of 2013	**379**
Total Countywide Permanent/Permanent Supportive Housing Units/Vouchers Inventory as of 2013	**415**

* Includes homeless housing (capital & vouchers) investment of Housing Consortium members in Boulder County including Boulder and Longmont.

*** Indicates projects that appear more than once on spreadsheets due to funding from multiple sources.

In 2014, the city of Boulder also invested $1.2M for Bridge House transitional housing for the Ready to Work program (48 beds) and $45K to Emergency Family Assistance Association for four transitional housing units for families on Yarmouth.

This Page Intentionally Left Blank

CITY OF BOULDER
CITY COUNCIL AGENDA

ITEM MEETING DATE:

July 22, 2014

AGENDA TITLE: Consideration of a motion to accept the June 10, 2014 study session Summary on the Overview of the Library and Arts programs and services and the Community Cultural Plan scope.

PRESENTERS
Jane S. Brautigam, City Manager
David Farnan, Library and Arts Director
Jennifer Miles, Deputy Library Director
Antonia Gaona, Access Services Manager
Matt Chasansky, Office of Arts and Culture Manager

EXECUTIVE SUMMARY

This agenda item provides a summary of the June 10, 2014 study session on the Overview of the Library and Arts programs and services and the Community Cultural Plan scope.

The purpose of the study session was to provide City Council a brief overview of the programs and services currently offered by the Library and Arts Department, to review the projects and initiatives currently underway in 2014, and to discuss the scope of the Community Cultural Plan. As part of the Community Cultural Plan discussion, staff requested feedback from council on the following questions:

1. Does council support the Community Cultural Plan guiding principles?
2. Does council support the spectrum of arts disciplines and creative industries represented as focus areas?
3. Does council support a more focused scope for the community outreach and stakeholder engagement, such as focused roundtables, events (inspired by the Civic Area Vision Plan), town halls, and social media as primary mechanisms for engagement?

STAFF RECOMMENDATION

Suggested Motion Language:
Staff recommends council consideration of this summary and action in the form of the following motion:

Motion to accept the June 10, 2014 Study Session summary on an overview of Library and Arts programs and services, and the Community Cultural Plan scope.

NEXT STEPS

Staff will be working with the consultants on the public input and research phase of the project through December 2014. This includes publicity and outreach. The drafting phase will follow, from January to March, followed by review by staff, boards and commissions, and council from April to June 2015. The final Community Cultural Plan is expected to be unveiled in the third quarter of 2015.

June 10, 2014 Study Session Summary on the overview of the Boulder Public Library and Arts programs and services, and the scope of the Community Cultural Plan

PRESENT

City Council: Macon Cowles, Suzanne Jones, George Karakehian, Tim Plass, Andrew Shoemaker, Sam Weaver, Mary Young

Staff members: City Manager Jane S. Brautigam, Library and Arts Director David Farnan, Deputy Library Director Jennifer Miles, Access Services Manager Antonia Gaona, Office of Arts and Culture Manager Matt Chasansky.

Consultants: Jerry Allen and Martin Cohen, the Cultural Planning Group

OVERVIEW OF THE PRESENTATION AND DISCUSSION

City Manager Jane Brautigam opened the meeting and introduced Library and Arts Director David Farnan and the staff. Mr. Farnan began by thanking City Council for the opportunity to share an overview about library and arts programs and services, as well as a discussion with council members to get input on the process to create a Community Cultural Plan

BOULDER PUBLIC LIBRARY PROGRAMS AND SERVICES

Mr. Farnan discussed the many vital roles that Boulder Public Library (BPL) serves in our community: a place to come together, share ideas, learn and grow, find entertainment, and participate in cultural programming and public discourse. Mr. Farnan described BPL's core services as offering a variety of library materials, promoting literacy, bridging the technology gap, offering cultural programming, providing creative initiatives, and preserving our history.

2014 Projects and Initiatives

Main Library renovation project: Mr. Farnan acknowledged the Library Commission's and City Council's support for getting the library renovation project included in the Capital Improvement Bond, and thanked the community for voting for the bond in 2011. Jennifer Miles noted that this year, BPL is reinventing the place to be for everyone. The Capital Improvement Bond funding afforded BPL the opportunity to improve three main focus areas of the Main Library. The new entry sequence of the Main Library will provide a more welcoming entrance with easier navigation, improved browsing, and a connection to the outdoors via lower shelving allowing for better views of the Boulder Creek corridor through the large glass walls. The new children's library will be an exciting, child and family-friendly destination, with a tunnel for a fun and exuberant entrance to the children's library, and the tunnel, being orange, will be visible immediately from the front entrance to the building. A variety of literacy activities that appeal to children of all ages will be in the children's library, including a large storytime area with comfy and creative seating, a discovery zone, computers, and of course, lots of books in lower, child-friendly shelving. The new Teen Space is more than four times larger than the former teen space in the Main Library, and includes a variety of flexible furniture, new audiovisual equipment, and a kitchenette. The Boulder Teen Advisory Board was instrumental in helping design this space for fellow teens, so that it would be multipurpose and flexible, and able to be used in a variety of ways. The new Teen Space has its grand opening June 26. In addition, BPL was able to apply 2013 salary savings to incorporate a number of project alternates, such as the Tech Lab (Makerspace), which was recently named The Foundry. Community input during the renovation design process with the architects generated two more focus areas: patrons expect to be able to use their libraries in different ways, and requested more spaces, that are both comfortable and flexible, in which to gather, meet, and study. Three meeting rooms are being added to the Main Library, for a total of six meeting rooms when the renovation is complete later this year. Meeting rooms will be equipped with new audiovisual equipment and an interactive room reservation system. Another request from the community was to bring back the café on the library bridge. Additional items include new flooring in the Canyon Gallery and north wing, a rooftop chiller to augment the HVAC system to make the building more comfortable during the summer, upgraded and expanded security camera system, replacement of the library's automated materials handling system, and implementation of radio frequency identification (RFID) in all BPL facilities for improved patron service and better security for BPL materials.

NoBo Corner Library opens: Antonia Gaona stated that after many years of requests for library service in north Boulder, BPL was able to open the NoBo Corner Library in late March, and the community has embraced this small library with delight and enthusiasm. Services offered in the 570-square foot space are: materials return and holds pick-up, public access computers and WiFi, and popular materials. The community has responded very positively and has expressed their happiness about the new library in letters to the editor and in social media, as well as verbally to staff. Two storytimes per week will soon be added to NoBo Corner Library, one in English and one in Spanish, and staff will continue evaluating library operations and requests for additional services.

Future plans

Mr. Farnan discussed the Library and Arts Department future plans. In November, a new BPL webpage and a new "discovery layer" (the way that patrons view and explore the library catalog) will be rolled out to provide better access for online customers; the new makerspace, the Foundry, opens in August with wonderful technology equipment thanks to a generous donation from the Boulder Library Foundation; new customer service philosophy being rolled out with the completion of the Main Library renovation; technological infrastructure; engaging our community outside of our four walls; expanding mobile and virtual services; updating the Library Master Plan in 2015-2016; and creation of a Community Cultural Plan, which Matt Chasansky will discuss next. The Library and Arts Department is excited to partner with Parks and Recreation and the Planning Department on activation projects throughout the Civic Area.

Council Discussion:

- Overall, appreciated the great presentation and information provided, and the services offered at BPL. Several services were mentioned specifically, from Hoopla to e-books and technology and equipment improvements.
- Desire expressed for continuing to improve pedestrian access to all libraries.
- Concern voiced about community members not feeling secure and welcomed at Main Library via downtown area, versus the same welcoming, family-friendly feeling at the branches and at NoBo Corner Library. Mr. Farnan responded about the renovation at Main Library providing opportunity to eliminate "dead spaces" within the building, as well as improved lighting and sightlines throughout the facility. He also mentioned that the Library and Arts Department is working with other city departments to activate and clean up the civic area downtown, and that library statistics show that there are a lot of kids and families coming to the Main Library and taking advantage of services.
- Question raised about how much the library does for the arts, and how much should be done out in the community. A request for more information about the use of the library theater and performing space. Mr. Farnan gave some information, said these issues would also be revisited during the Community Cultural Plan process, and that the theater does need some investment.
- E-books were hoped to make materials more available, but the economics are difficult for library budgets. Mr. Farnan gave some detailed information on the costs of e-materials versus traditional books and how the publishing industry is still working this out and libraries are part of that conversation.
- Question about community meeting spaces, size and access, at Main Library and in north Boulder? Ms. Miles answered that there will be six meeting spaces at the end of the renovation, up from three meeting rooms currently. Ms. Gaona stated that staff at NoBo Corner Library are reaching out to community partners in north Boulder for referring members of the public to available meeting spaces.
- How does RFID technology affect staffing? Mr. Farnan answered that RFID and e-commerce will both allow for efficiencies that will free up staff to engage with patrons for more custom and longer interactions to better serve them.
- What is the new "discovery layer"? Mr. Farnan answered that BPL has a massive catalog of materials, and the new and improved discovery layer will make for easier searching for patrons, as well as streamlining access to e-books, and all at a fairly reasonable cost for much improved patron service.
- Appreciation expressed for opening the NoBo Corner Library, and it was noted that

Council member Morzel was a very persistent advocate of library service for north Boulder, and that this library should almost have been named the "Morzel Corner Library" to honor her work over many years in this regard.

OVERVIEW OF COMMUNITY CULTURAL PLAN SCOPE

Mr. Chasansky began by stating that the City of Boulder has begun the process to create a Community Cultural Plan (CCP), and that this plan will guide policies, funding, and program priorities for the next nine years. The Cultural Planning Group (CPG), a firm specializing in cultural strategy and with a unique and innovative approach to community interaction, has been selected as the consultant to assist in the CCP effort. Jerry Allen and Martin Cohen from CPG were in attendance, and introduced themselves and talked about their experience and their vision for Boulder's CCP.

Chasansky then introduced the guiding principles of the Community Cultural Plan: a) establishing a city-wide perspective; b) concentrating on appropriate focus areas; c) supporting other city priorities; d) being open, forthcoming, and collaborative; and e) demonstrating transparency and stewardship. He pointed out that these principles would direct staff and stakeholders on how to conduct the work of the planning process, and would be a main subject for the steering committee as they provide advice on how the process is managed. Also of primary concern are the three objectives of the plan, articulated as questions:

a) What are the priorities of the community?
b) What strategies, programs, and tools will the city provide to support the community in achieving this vision?
c) What are the steps, capacities, and resources required to fully implement those strategies?

An outline of key justifications for conducting the planning process was described by Chasansky. He stated that the plan should include an educational piece to ensure that the public understands the value of the Community Cultural Plan and that they feel motivated to participate.

The time horizon was described. Chasansky talked about how the structure of the plan would align with the objectives, with a nine-year vision plan divided into three-year strategies and one-year work plans. This structure would also serve to help ensure that the momentum for meeting goals in the plan continues through the duration.

Chasansky listed the proposed focus areas for the plan, which can be divided into three broad categories: a) arts disciplines, b) creative industry professions, and c) the roles people play in the previous two categories. By examining the process through these categories, the plan will have a consumable scope and provide manageable results. Those results will be described in the finished plan as programmatic trajectories: a series of directions for the implementation of actual projects after the plan is complete. Chasansky listed a series of possible programmatic trajectories, pointing out that the public input and research phases of the plan will describe the best options for Boulder.

The planning tools for public input and research were described by Chasansky. For public engagement, he proposed: a) fairs or festivals, b) town hall events, c) social media, and d)

focused roundtables. With regard to research, the following main tools were described: a) foundation research, b) comparative benchmarking, c) aspirational benchmarking, and d) economic impact studies. It was mentioned that both the Library Commission and the Arts Commission affirmed these planning tools.

The timeline for this process was described, with special attention to the check-ins scheduled with advisory boards and commissions and City Council. Completion of the plan is expected in the third quarter of 2015.

Chasansky reinforced that the most important component of the plan is community input. He described the groups that would be brought into the conversation, ranging from open public interactions to focused discussions with key individuals at roundtables and on the steering committee. A graphic was presented to represent the cross-section of the community that would be key for interactions on the details of the plan.

Finally, Chasansky presented three questions for council:
a) Does council support the Community Cultural Plan guiding principles?
b) Does council support the spectrum of arts disciplines and creative industries represented as focus areas?
c) Does council support the focused planning tools for public engagement and research?

Council Discussion:

- A discussion ensued about the concept of "what is culture?" and many council members articulated aspects of the Boulder community that they feel are important to consider and include, such as: languages, history, creative industries, music, engineering, digital media, and gardening. What should be included in this planning process, as this plan will lay out how the city will support arts and culture?
- Excitement was expressed about the Community Cultural Plan and support for the concept so far. The Knight Soul of the Community is a great report and appreciation for including that information, as well as a hope that Denver's 20/20 plan be included in research. The experience of the consultants is impressive.
- Comment that Boulder should work with neighboring communities to offer complementary arts programs. Our zoning codes may need to be reviewed to consider whether creativity and the arts are being stifled. Things like chalk art should be easier for neighborhoods and other groups to use for community engagement, but not allowed.
- Civic Area Plan engagement and using contests worked wonderfully. Costs for different kinds of surveys were discussed, as well as alternative ideas for community participation and input from staff and CPG. Important to include the University of Colorado as they represent a large segment of our community. We need to make sure that everyone in the community feels invited to participate and provide input but we do not need to hear from every single person in the community, as that would be financially unfeasible.
- City Manager Jane Brautigam sounded a cautionary note that Boulder not react solely to how much other local communities are spending in this area, as spending reflects priorities, and Boulder probably spends more on human services and open space than

other communities. Additional questions about how much is spent on the arts and culture in Boulder, both by local government, nonprofits, and in the community. Any comparisons need to be “apples to apples.”

This Page Intentionally Left Blank

CITY OF BOULDER
CITY COUNCIL AGENDA ITEM

MEETING DATE: July 22, 2014

AGENDA TITLE: Consideration of a motion to accept the May 27, 2014 study session summary on Envision East Arapahoe.

PRESENTERS: Jane S. Brautigam, City Manager
David Driskell, Executive Director, Community Planning & Sustainability (CP&S)
Susan Richstone, Deputy Director, CP&S
Tracy Winfree, Director of Public Works for Transportation
Lesli Ellis, Comprehensive Planning Manager, CP&S
Kathleen Bracke, GO Boulder Manager, Public Works Transportation
Sam Assefa, Senior Urban Designer
Micki Kaplan, Senior Transportation Planner, Public Works Transportation
Jeff Hirt, Planner II, CP&S
Marcy Cameron, Planner I, Historic Preservation Planner, CP&S

EXECUTIVE SUMMARY:
This agenda item provides a summary of the May 27, 2014, City Council Study Session on the Envision East Arapahoe plan. The main purposes of the study session were to provide an update and get feedback from council on the issues and opportunities, scope of work, engagement strategies, and ideas for developing the project vision.

STAFF RECOMMENDATION:

Suggested Motion Language:
Staff requests council consideration of this summary and action in the form of the following motion:

Motion to accept the summary of the May 27, 2014, City Council Study Session on Envision East Arapahoe (**Attachment A**).

ATTACHMENTS:
A: Summary of the May 27, 2014 Study Session for East Arapahoe
B: Final PowerPoint Slides and handouts from May 27, 2014

City Council Study Session Summary
May 27, 2014
Envision East Arapahoe

City Council Present: George Karakehian (Mayor Pro Tem), Macon Cowles, Suzanne Jones, Lisa Morzel, Tim Plass, Andrew Shoemaker, Sam Weaver, and Mary Young.

Staff Present: Jane Brautigam, City Manager; David Driskell, Executive Director Community Planning & Sustainability (CP&S); Susan Richstone, Deputy Director CP&S; Lesli Ellis, Comprehensive Planning Manager, CP&; Kathleen Bracke, GO Boulder Manager, Public Works Transportation; Marcy Cameron, Historic Preservation Planner, CP&S; Micki Kaplan, Senior Transportation Planner, PW Transportation; Sam Assefa, Senior Urban Designer, CP&S; and Jeff Hirt, Planner II, CP&S.

PURPOSE:
The purpose of the study session was to provide an update on the project as it gets underway and get feedback on the approach, including the proposed scope of work and timeline, the project issues and opportunities, community engagement, and ideas for developing the project vision.

Staff introduced the team and project with PowerPoint slides and handouts and provided a brief overview of the area's agricultural, transportation and industrial history. The team gave an overview of the work to date and anticipated timeline and highlighted transportation and other issues and opportunities. (See **Attachment B**.)

City Council provided the following comments and questions about the issues and approach:

Transportation:
Council asked for clarification on the Regional Transportation District's (RTD's) Northwest Area Mobility Study, which corridors were designated as potential Bus Rapid Transit (BRT) corridors, and whether the corridor is still eligible as BRT even with previous improvements. Also, Colorado Department of Transportation (CDOT) has invested a lot of money along this corridor so it might be challenging to make it become a true boulevard.

Staff stated that the RTD has prioritized SH. 119 and Hwy. 287 for near-term grant applications, and that East Arapahoe Avenue (SH. 7) is also identified as a high priority potential BRT corridor and noted that improvements are incremental; staff is unaware of any improvements that would preclude the route from becoming a BRT corridor. Additionally, there are a wide variety of ways to achieve BRT.

This project provides an opportunity to work with CDOT and the community to develop the corridor and create an area that is mutually beneficial to the city and CDOT. CDOT is an important partner in this project and there are many different types of projects around the state. Best practices should be incorporated into Boulder.

The Vision:
Staff asked City Council to **prioritize** the top three "Draft Vision Elements" as noted in **Attachment B.** Council identified the following priorities for East Arapahoe to become a people-oriented place that is more connected, resilient, and vibrant. It will:

- *allow people to move east and west along a boulevard with multiple transportation options, including excellent transit service and BRT (#4),*
- *connect north and south and easily to downtown and the west side of Boulder and eastern towns (#6),*
- *include and protect existing neighborhoods while offering some new choices in housing (#7),*
- *have nearby high quality amenities and facilities for businesses and neighborhoods such as restaurants and day care (#9),*
- *protect biodiversity along riparian corridors and promote nature-friendly design (#12).*

Some council members stated it was hard to prioritize, as most of the draft elements appropriately describe the vision for the place and they would not omit any. They would add the following elements:

More Emphasis on Waste Reduction: Recycle Row/Western Disposal/6400 Arapahoe should be emphasized more; it is part of the city's vision, and reducing waste and its function should be celebrated more.

Retention of Small Business and Service Industrial: This is an important area to incubate small businesses. The current tired buildings and lack of amenities also make it possible for tenants to locate here. Preserve some of those opportunities for small business and extend the concept of affordability to small businesses as well as housing. The area has a concentration of health and technology start-ups and it is important to preserve that affordability. One council member pointed out Service City (North 28th St.) and agreed that service industries should not be displaced. Lessons from the development of the North Boulder Subcommunity Plan should be applied to this project (i.e. preservation of the industrial zoning district). This project also should lead to more amenities.

Baseline for Tracking Progress: It was also suggested that the draft list of vision ideas be used to establish a baseline and to track progress over time.

Gateway and History: The history presentation highlighted the area's role as Boulder's eastern gateway and that it has historically provided a sense of arrival for the city. There is a richness and finer grain in the past that current projects should strive for. There is a great opportunity now to define East Arapahoe. Valmont Plant is architecturally interesting even while environmental contamination issues may make it undesirable for acquisition; the plant could serve as a museum or symbol for the age of carbon and be an interesting tie to the past.

Boundary of Project:
One council member sought clarification on how the project boundary was determined and stated that it might be a lost opportunity not to engage the neighborhoods to the south; some changes may make the neighborhoods less auto-dependent. Staff replied that previous discussions shaped the boundary. It is deliberately focused along the corridor itself and the properties to the north rather than the single-family neighborhoods to the south. However, the connections across Arapahoe Avenue are particularly important, too.

Additional Feedback on the Project Approach (Goals and Objectives):

- Providing imagery is crucial to help envision opportunities and all the stated objectives.
- The city is engaged in many different projects around the city with common themes (e.g., walkability) and that it's important to keep in mind what's unique about this area. This project should help define the area and what makes it special and unique.
- Will community engagement include design charrettes? Victor Dover's charrettes in 1994 ignited people and allowed the community to engage and be creative. Staff stated that scenario planning is a good way to look at different land use opportunities and engage people at charrettes. There are many good options to explore.
- Will there be an opportunity to consider form-based zoning? Staff responded that there could be and that Victor Dover is anticipated to return in October and will be involved in discussions around scenarios, guidelines, form-based zoning, etc. He may be able to provide input around those aspects of the project. Victor Dover is an excellent communicator and can tell what can and cannot work and has effective hypothetical visualizations.
- How does Sustainable Street and Centers fit in? Staff clarified that the Arapahoe segment of the Phase 1 Sustainable Streets and Centers project completed in fall 2013 has been folded into the Envision East Arapahoe project. *(Note: 30th and Colorado Boulevard analysis and options will occur on a slightly later track but are noted in the project timeline as well.)*

NEXT STEPS
Staff will continue to finalize the Existing Conditions assessment, develop the draft vision, as well as prepare concepts and indicators to measure scenarios for a public workshop on July 21. The team will return to council in fall 2014. The Victor Dover event is tentatively scheduled for October 9, 2014.

This Page Intentionally Left Blank

Envision East Arapahoe

East Arapahoe Area Plan and
Sustainable Streets and Centers

City Council Study Session – May 27, 2014

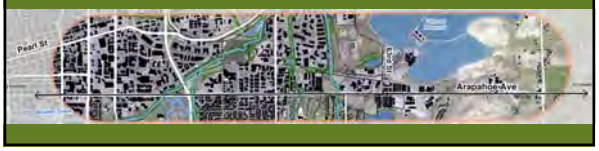

Presentation / Purpose

1. Project Approach
   - Goals and objectives
   - Community engagement
   - Timeline
2. Issues/Opportunities
3. Draft Vision

History: First Regional Road, Farming

Auto Parks

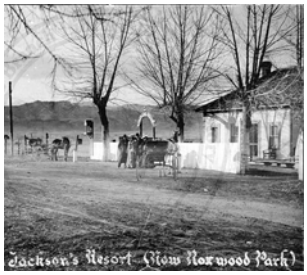

Industry

Envision East Arapahoe

What is the Approach?

Project Overview and Approach

1. Combined East Arapahoe and SS&C (Arapahoe corridor)
2. Focused geography and timeline

Outcome-Oriented

- A **vision** plan ("lite")
- **Data-driven** scenarios and indicators
- **Near-term actions** and projects (e.g., guidelines, pilot projects, TDM and connections)
- Community **engagement** and partnerships

Process Goal/Objectives

- Goal:
  - Community-driven plan
  - Transformative, identifying connections
  - Placemaking plan identifying districts
  - Actionable recommendations
- Objectives (handout)

Focused Process and Schedule

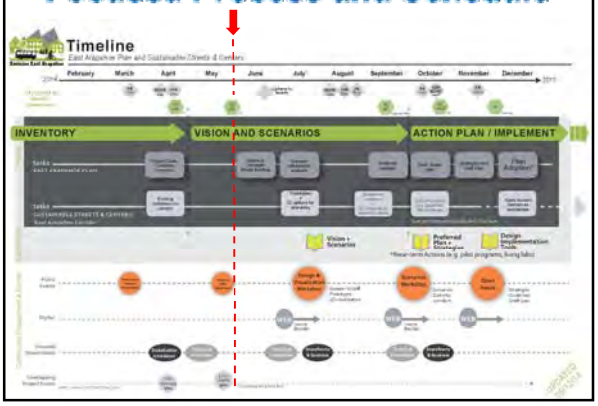

Visual Preferences/Visualization (July)

Scenarios and Indicators (July)

- **Scenarios** – illustrate possible futures
- **Indictors** – help measure outcomes, e.g.:
  1. Redevelopment potential
  2. Carbon emissions
  3. Connections/walkability
  4. Housing mix, ratio
  5. Water and energy use
  6. Access to parks
  7. Return on investment
  8. etc.

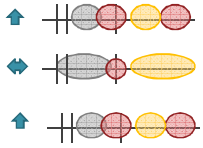

Stakeholder and Community Engagement

- Stakeholder interviews
- Workshops: visualization, scenarios
- Tours and Storefront events
- Online / Inspire Boulder
- Boards and Commissions, Council

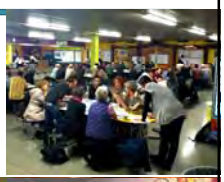

Stakeholder Interviews, so far…

- **Institutions:**
  - Boulder Community Health
  - Naropa East
  - University of Colorado, East
- **Agencies:**
  - CDOT, RTD
  - BHP
  - Boulder County
  - BVSD
- **Industries/Employers:**
  - Western Disposal
  - Ball Aerospace
  - 6400 Arapahoe
  - EVOL
- Property Owners/Other
- Community Cycles

Boards and Commissions Feedback

- General support for plan "lite" and approach
- Be bold about infrastructure
- Placemaking important
- Guidelines for site review
- Neighborhood walkability/connections
- Cultural resources

✓ Planning Board
✓ TAB
✓ BDAB

Envision East Arapahoe

What are the Issues and Opportunities?

Mobility and Connections

Arapahoe Ave. Local and Regional Corridor

- East/west travel for Boulder employees and regional
- BRT/Enhanced transit potential

Lacks Connectivity and has Barriers

- High speed highway, creek, railroad, between neighborhoods and businesses
- Multi-modal system is fragmented, needs work along and across Arapahoe Ave.

RTD's Northwest Area Mobility Study

Potential mobility improvements (e.g., BRT)

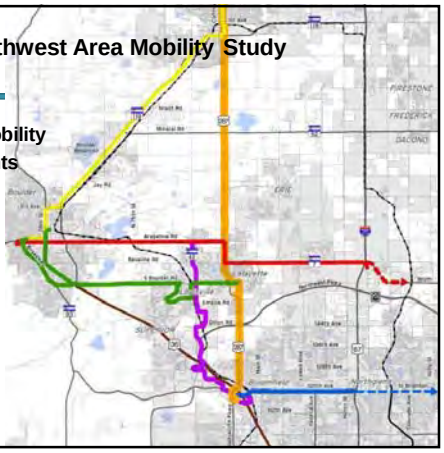

Transportation Opportunities

- BRT
- Mobility hubs
- Multi-modal connections
- Transportation Demand Management

Environmental / Facilities

- Within Boulder and South Boulder Creek floodplains
- Limited facilities and services on north side

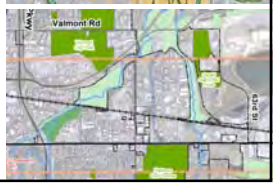

Placemaking

1. Pattern doesn't reflect community goals (BVCP)
2. A major employment center with more growth potential
3. Other institutions planning and expanding

Housing and Amenities

- Select appropriate locations for housing
- Amenities for both residents and workers needed

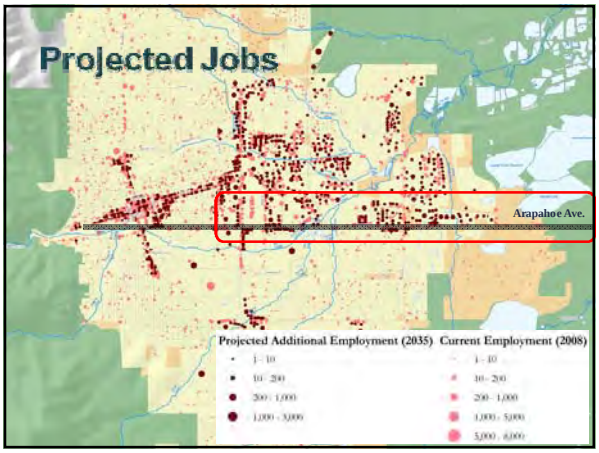

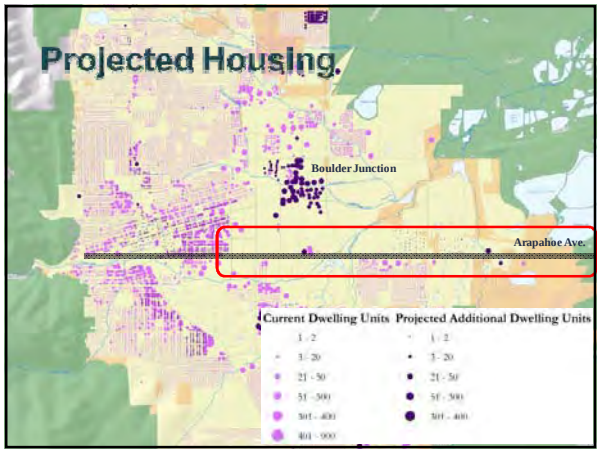

Coordination / Partnership

- CU: Transportation Master Plan, East Campus, North Boulder Creek Master Plan
- Boulder Community Health
- Naropa
- Western/6400 Arapahoe
- Businesses

Envision East Arapahoe

What is our Collective Vision?

Transformation

- How do you envision East Arapahoe?
  - What would make it a great place over time?
  - What type of change?
  - What stays the same?

Site Analysis Diagram

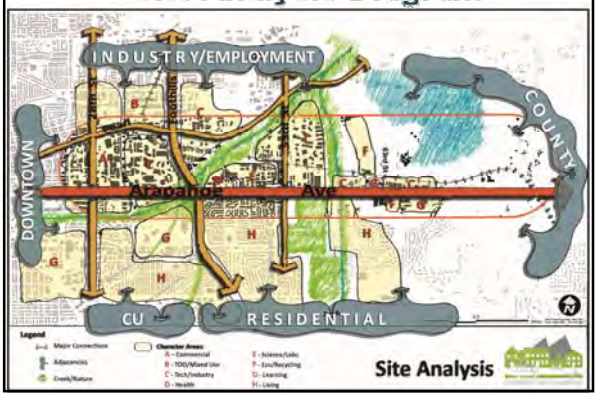

Council Feedback

1. **Draft Vision**
   (See Exhibit 4, page 22)
2. **Project Approach:**
   - proposed goals and objectives?
     (See pages 6-7)
   - issues and opportunities?
     (See pages 10-11 and Exhibit 1, pages 12-16)
   - timeline and engagement process?
     (See pages 7-9)

Next Steps

- June – Update for boards and commissions, technical group
- July 21 (tent.) - Public event(s) and online engagement: Visual preference, indicators, and scenario concepts
- August – Board and Commission discussion
- Sept – City Council, scenarios

Envision East Arapahoe

MAPS

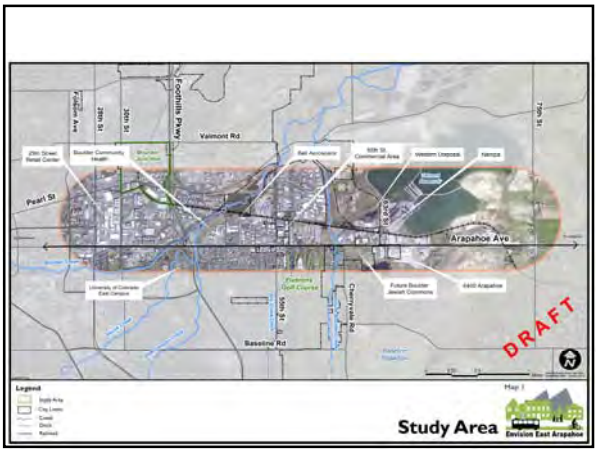

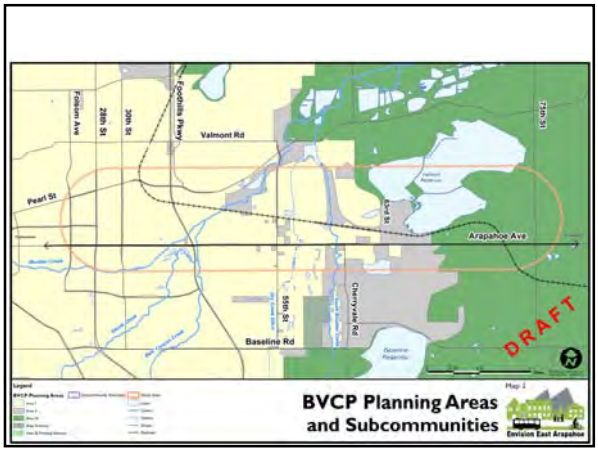

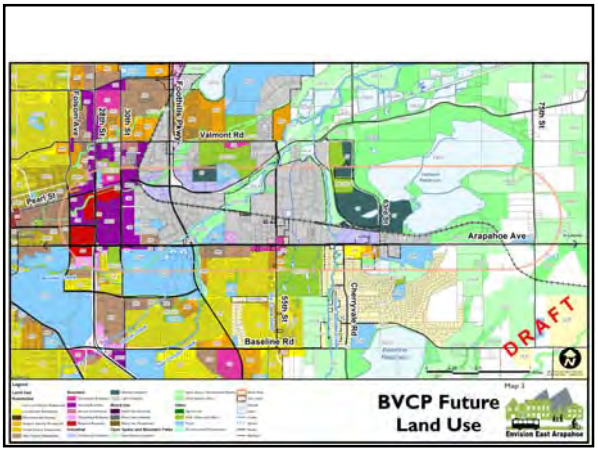

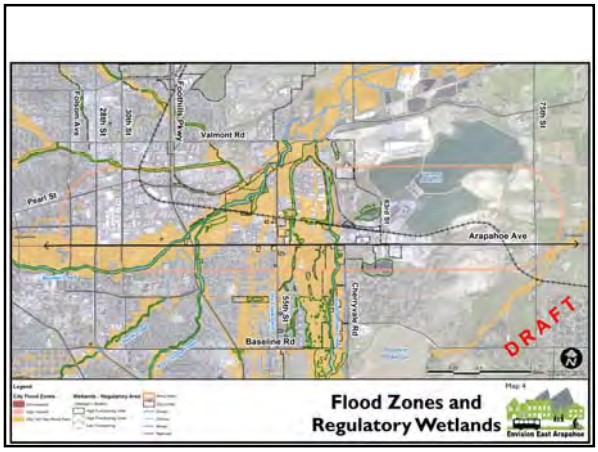

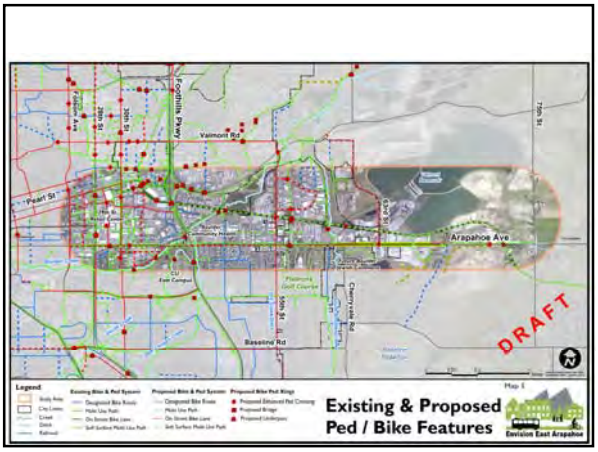

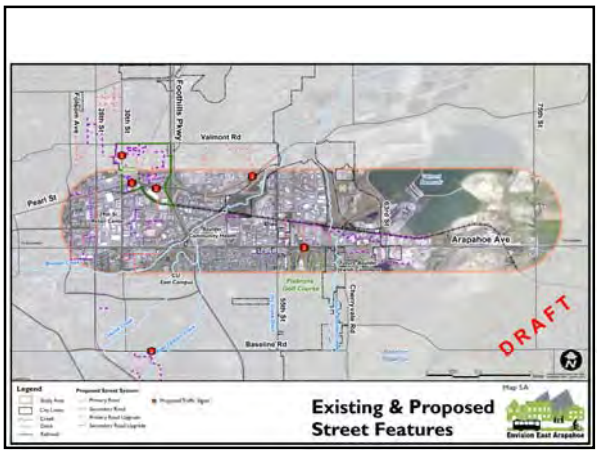
Valmont Rd
Pearl St
Arapahoe Ave
Baseline Rd
Foothills Pkwy
Cherryvale Rd
DRAFT
Existing & Proposed
Street Features

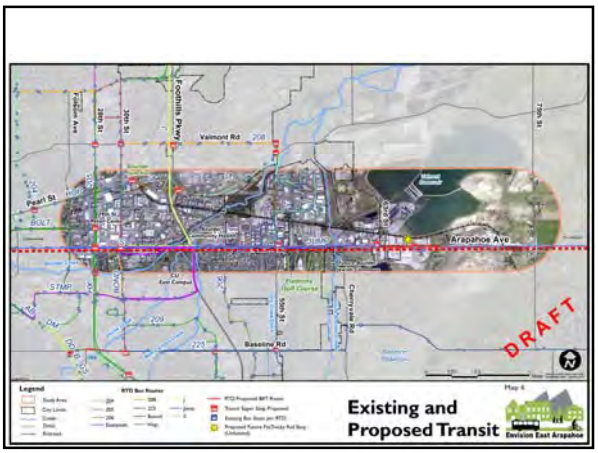
Valmont Rd
Pearl St
Arapahoe Ave
Baseline Rd
Foothills Pkwy
Cherryvale Rd
DRAFT
Existing and
Proposed Transit

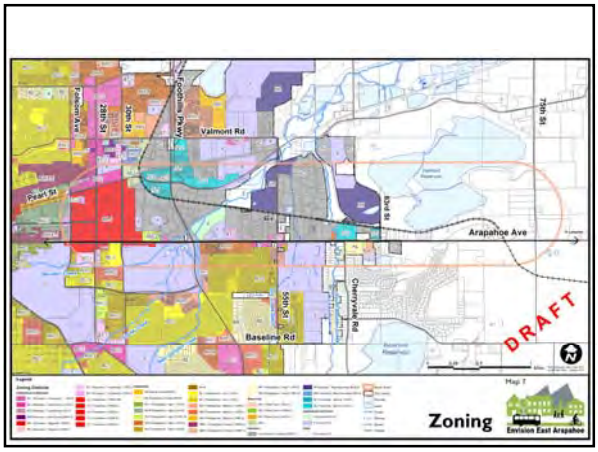
Valmont Rd
Pearl St
Arapahoe Ave
Baseline Rd
Foothills Pkwy
Cherryvale Rd
DRAFT
Zoning

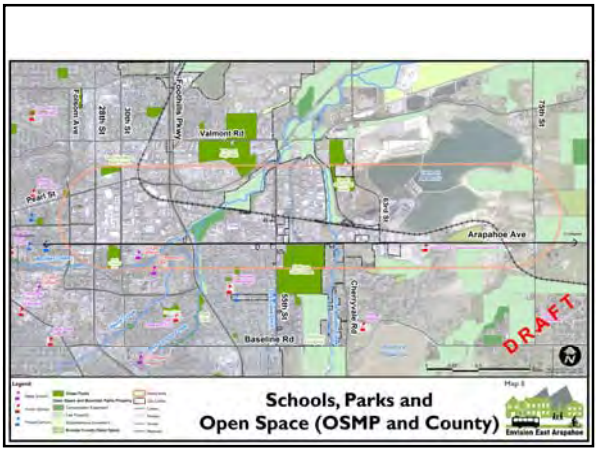
Valmont Rd
Pearl St
Arapahoe Ave
Baseline Rd
Foothills Pkwy
Cherryvale Rd
DRAFT
Schools, Parks and
Open Space (OSMP and County)

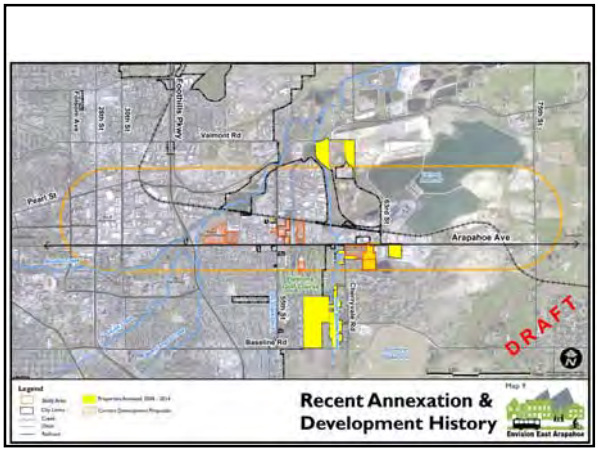
Valmont Rd
Pearl St
Arapahoe Ave
Baseline Rd
Foothills Pkwy
Cherryvale Rd
DRAFT
Recent Annexation &
Development History

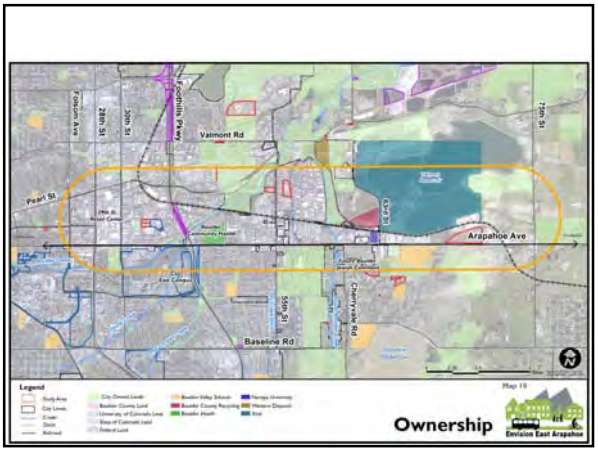
Valmont Rd
Pearl St
Arapahoe Ave
Baseline Rd
Foothills Pkwy
Cherryvale Rd
Ownership

Foothills Pkwy
Valmont Rd
Pearl St
Arapahoe Ave
Baseline Rd
Legend
Study Area
City Limits
Creek
Ditch
Envision East Arapahoe

Envision East Arapahoe

Project Goals and Objectives

draft - 05/27/14

Goals

Develop a **community-driven vision plan** to transform the corridor into a place with more **mixed-use, compact, and walkable districts that are better connected** with west Boulder and the region. Identify specific districts for **placemaking** based on the conditions and data and community engagement. Develop specific, **actionable recommendations,** such as pilot projects to test ideas, follow-up access or infrastructure, TDM and connections, funding and investment strategies, collaboration, districts to be considered for land use/zoning changes, and guidance for specific locations to assist the development and design review process such as guidelines or code changes.

Objectives

1. **Co-Design a Vision:** Invite the community to co-design the vision and to be innovative but also keep the process focused and moving forward.

2. **Partner/Coordinate:** Coordinate with stakeholders including large institutions, other government agencies, businesses, and nonprofits to address current issues and recognize and respond to future plans.

3. **Provide Imagery:** Provide information, stories, and images to create awareness and excitement for what the corridor and places along it could become.

4. **Use Data and Scenarios:** Use scenarios, data, and indicator-based analysis to assist with informed decision making.

5. **Make Engagement Easy:** Engage people in meaningful ways using a mix of tools that make it convenient and easy to participate to capture ideas and create a community-driven plan.

6. **Coordinate with Plans:** Coordinate with other ongoing projects, such as the Comprehensive Housing Strategy, Transportation Master Plan, Northwest Area Mobility Study, Climate Commitment, and Access Management and Parking Strategy. Evaluate options for new housing, innovative transportation, TDM and parking approaches, and to address Boulder's Climate Commitment and other sustainability goals. Improved and integrated land use, transportation/TDM planning. Inform the scope of work for the upcoming BVCP Update.

7. **Work with Leadership:** Work with boards and commissions and City Council for guidance as the plan evolves.

8. **Model Sustainabiilty:** Make the plan an interdepartmental effort and engage staff within the city organization to support integrated planning and continue to model the Sustainability Framework efforts.

9. **Recognize Neighborhoods:** Work with but shield existing neighborhoods south of Arapahoe Avenue.

10. **Test Ideas:** Use the project to test approaches that might be used for the Boulder Valley Comprehensive Plan.

CITY OF BOULDER

Envision East Arapahoe

Draft Vision Elements

draft - 05/27/14

East Arapahoe will be a people-oriented place that is more connected, resilient, and vibrant. It will:

1. reflect its agrarian past and history and existing cultural assets and art
2. support Boulder Brand incubator businesses, investment, ingenuity, and vitality
3. attract people to spend time in vibrant districts (e.g., health, bio, science/creative, learning, recreation, eco/zero-waste)
4. allow people to move east and west along a boulevard with multiple transportation options, including excellent transit service and Bus Rapid Transit (BRT)
5. provide safe and welcoming places for pedestrians and bicycles
6. connect north and south and easily to downtown and the west side of Boulder and eastern towns
7. include and protect existing neighborhoods while offering some new choices in housing
8. have nearby parks, open space, services, within a short walk or ride
9. have nearby high quality amenities and facilities for businesses and neighborhoods, such as restaurants and day care
10. boast safe, accessible, and beautiful public spaces and architecture
11. have reliable utilities and services and promote resource conservation and renewable energy
12. protect biodiversity along riparian corridors and promote nature-friendly design
13. include a number of partners collaboratively working together to achieve the vision
14. use performance metrics to track how the place is improved over time and allow for learning

www.EnvisionEastArapahoe.com

CITY OF BOULDER

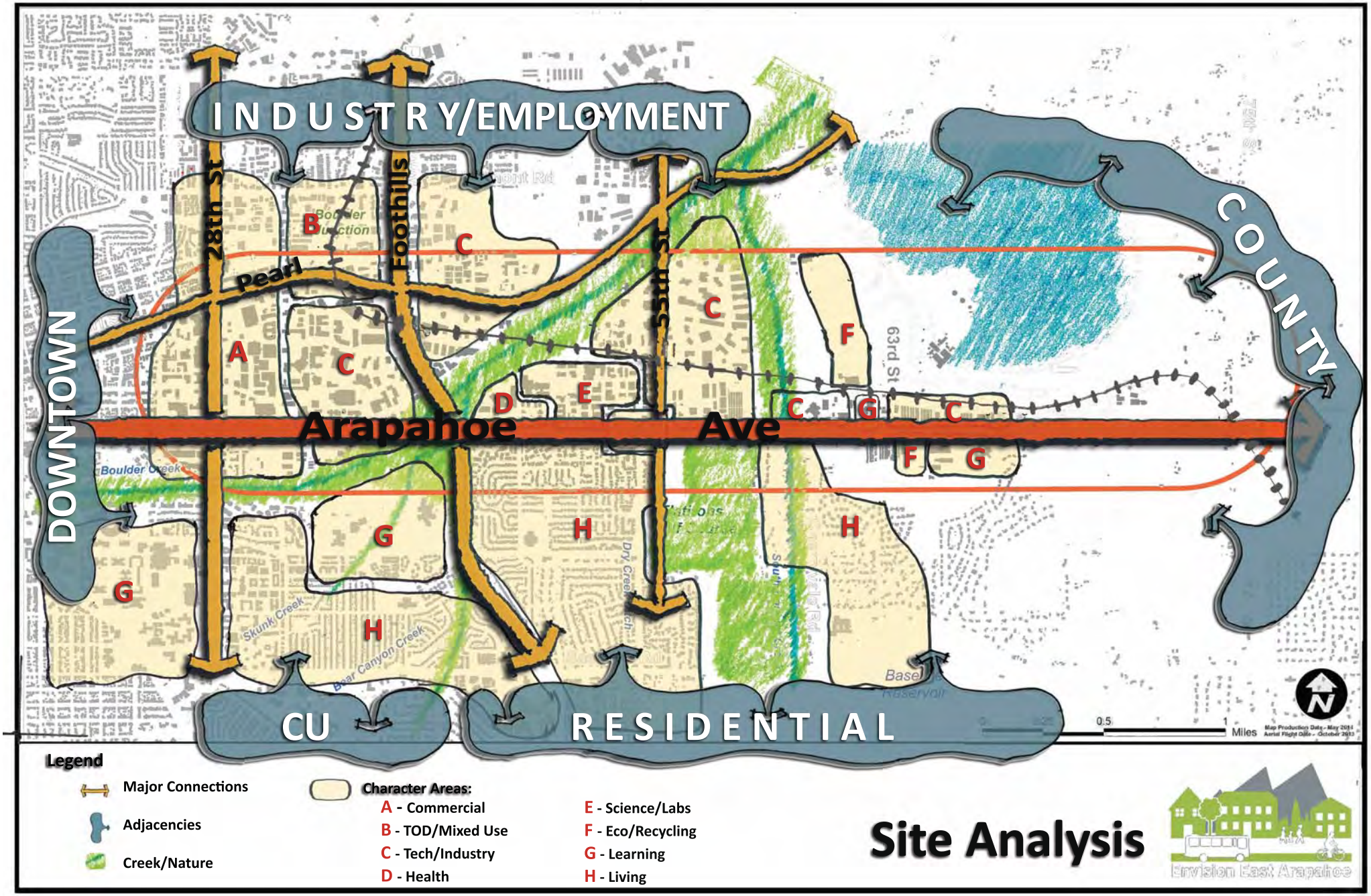
INDUSTRY/EMPLOYMENT
DOWNTOWN
COUNTY
CU
RESIDENTIAL
Arapahoe Ave
Pearl
28th St
Foothills
55th St
63rd St
Boulder Creek
Skunk Creek
Bear Canyon Creek
Dry Creek
Boulder Junction
Base Reservoir
A
B
C
D
E
F
G
H
0.5
1
Miles
Legend
Major Connections
Adjacencies
Creek/Nature
Character Areas:
A - Commercial
B - TOD/Mixed Use
C - Tech/Industry
D - Health
E - Science/Labs
F - Eco/Recycling
G - Learning
H - Living
Site Analysis
Envision East Arapahoe

This Page Intentionally Left Blank

CITY OF BOULDER
CITY COUNCIL AGENDA ITEM

MEETING DATE: July 22, 2014

AGENDA TITLE
Consideration of a motion to authorize the City Manager to accept a U.S. Forest Service Special Use Permit for the Barker Gravity Pipeline

PRESENTER/S
Jane S. Brautigam, City Manager
Tom Carr, City Attorney
Maureen Rait, Executive Director of Public Works
Jeff Arthur, Director of Public Works for Utilities
Joe Taddeucci, Water Resources Manager
Kevin Clark, Utilities Engineering Project Manager

EXECUTIVE SUMMARY
In 2010, the city was granted a conditional license exemption by the Federal Energy Regulatory Commission (FERC) for the Boulder Canyon Hydroelectric Project (BCH). The exemption will automatically go into effect once the city obtains a U.S. Forest Service (USFS) Special Use Permit (SUP) for the Barker Gravity Pipeline to occupy approximately 39 discontinuous acres of national forest land. The exemption will replace the previous project license, and will remove Barker Dam and Reservoir, the Barker Gravity Pipeline, Kossler Reservoir and the Boulder Canyon Penstock from FERC jurisdiction. Under the exemption, only the power plant and adjacent appurtenant facilities will remain under FERC jurisdiction similar to the city's other seven license-exempt hydroelectric facilities.

Since 2010, the USFS and city staffs have negotiated acceptable SUP terms and conditions. The current permit provides adequate and reasonable operational and maintenance provisions, including access and the physical space required to maintain the pipeline on USFS lands. The standard permit language does provide the USFS authority to amend, suspend or revoke the permit for the portion of the pipeline on USFS property (similar to FERC's authority under the license). However, accepting the SUP will reduce

such authority over city water infrastructure as Barker Dam and Reservoir, Kossler Reservoir, over half of the Barker Gravity Pipeline and the Boulder Canyon Hydro Penstock will no longer be under any federal agency jurisdiction once the exemption goes into effect (see Attachment A).

Without the SUP, the city is at risk of losing its permanent exemption from licensing and having to initiate a long and costly licensing process (and periodic relicensing), the outcome of which would be unknown. Therefore, staff recommends the acceptance of the current SUP by the Aug. 31, 2014 deadline so that the exemption can take effect. Once in effect, the licensing exemption is perpetual and will not be subject to future FERC renewals.

STAFF RECOMMENDATION

Suggested Motion Language:
Staff requests council consideration of this matter and action in the form of the following motion:

Motion to authorize the City Manager to accept the proposed U.S. Forest Service Special Use Permit for the Barker Gravity Pipeline.

COMMUNITY SUSTAINABILITY ASSESSMENTS AND IMPACTS

- Economic – An adequate, reliable water supply is essential to maintaining a diverse and sustainable local economy. The Barker Gravity Pipeline transports 30-40 percent of the city's municipal water supply on an annual basis and is a critical component of the city's water supply system.

- Environmental – Impacts from pipeline maintenance activities include temporary construction disturbance that is restored at the end of each maintenance project. The Barker Gravity Pipeline transports water for hydroelectric power generation at the Boulder Canyon power plant. In 2013, BCH generated for six months and produced about 12 million kilowatt hours of clean, renewable electricity.

- Social - The entire community expects and benefits from a reliable municipal water supply. In order to continue to meet established water supply reliability criteria, maintenance of critical infrastructure is required. The proposed SUP will allow the city to continue to maintain the Barker Gravity Pipeline.

OTHER IMPACTS

- Fiscal – The SUP will require an annual payment to the USFS of approximately $4,500 (subject to annual adjustment). This payment is based on standard fees and is in line with other city payments to the USFS for similar facilities and would be paid from the normal Utilities Division operating budget. Pipeline maintenance projects are included in the annual capital improvements program budget.

- Staff time – Operation and maintenance of the Barker Gravity Pipeline is part of the normal Water Resources work plan.

PUBLIC FEEDBACK

The FERC license exemption process included numerous opportunities for public involvement. FERC uses a three stage consultation process implemented over several years where public comments may be submitted at any time. The city held a public meeting at the beginning of the process to receive public, as well as federal and state agency comments concerning the exemption. In addition, at three points in the process, the city formally requested comments in writing from all project stakeholders. Public comments from the FERC process did not indicate objection to the exemption.

BACKGROUND

BCH has operated since 1939 under a FERC license issued to Public Service Company of Colorado (PSCo) and transferred to the city upon BCH purchase in 2001. City Utilities infrastructure covered under the license includes: Barker Dam and Reservoir; Kossler Reservoir; the Barker Gravity Pipeline; the BCH Penstock and the BCH hydro plant.

In March 2009, the city filed an application for an exemption from licensing for BCH. FERC accepted surrender of the existing license and granted a conduit exemption for the project on Nov. 5, 2010. The exemption will replace the previous project license, and will remove Barker Dam and Reservoir, the Barker Gravity Pipeline, Kossler Reservoir and the Boulder Canyon Penstock from FERC jurisdiction. Approximately 5 of the 11.7 miles of the Barker Gravity Pipeline resides on national forest. FERC stipulated that the exemption would not become effective until the city obtains a USFS SUP to ensure continuous authorization for city occupancy of federal land without trespass.

On Aug. 27, 2010, the USFS sent a proposed SUP to the city for its review and acceptance. The city could not accept the initial SUP due to problems with language concerning liability, as well as restrictions in pipeline corridor width and access that would have prevented the city from performing needed maintenance on the pipeline. Since that time, city and USFS staff has been working together towards mutually agreeable SUP terms and conditions.

Progress on the permit has been impacted by a number of external factors, including natural disasters (forest fires and floods). As such, the city has requested and received (with USFS support) two extensions of the deadline for providing the SUP. Both city and USFS staff has prioritized meeting the current Aug. 31, 2014 deadline. FERC staff has recently indicated that another extension is unlikely if the August deadline is not met.

ANALYSIS

Since 2010, city and USFS staff has worked cooperatively on the permit and associated plans to develop satisfactory conditions related to liability, construction and maintenance activities and corridor width. The current permit, which will have a 30-year term, recognizes a 60-foot pipeline corridor and use of motorized vehicles/heavy equipment for

repair/maintenance of the pipeline and contains acceptable liability provisions. Staff believes these conditions will allow for adequate and reasonable pipeline maintenance.

The standard permit language does provide the USFS authority to amend, suspend or revoke the permit for the portion of the pipeline on USFS property (similar to FERC's authority under the license). However, accepting the SUP will actually reduce such authority over city water infrastructure as Barker Dam and Reservoir, Kossler Reservoir, over half of the Barker Gravity Pipeline and the Boulder Canyon Hydro Penstock will no longer be under any federal agency jurisdiction once the exemption goes into effect (see Attachment A).

City Council has alternatives with regard to the Barker Gravity Pipeline SUP. These include:

1. Authorize the City Manager to execute the current SUP and provide it to FERC by the August 31, 2014 deadline; or
2. Refuse the SUP and begin a new FERC licensing process.

Option 1 will allow the city to continue to operate and maintain the Barker Gravity Pipeline to ensure that the city can use its water supplies as needed to reliably meet municipal water needs. This option will also allow the current FERC license to be surrendered, the FERC exemption from licensing to take effect in perpetuity and removal of most BCH facilities from federal jurisdiction. Option 1 provides the city the most future assurance and control over these critical water supply facilities.

Option 2 is not preferred because it would immediately require a new licensing effort to allow FERC to retain jurisdiction over the Barker Gravity Line on federal lands. Relicensing is time consuming (two to three years at a minimum), could cost $500,000 to $2 million and would result in all BCH facilities remaining under FERC jurisdiction. The addition of new, less favorable terms and conditions to the license would also be possible, and remaining under a license would involve a periodic relicensing process.

Staff believes the known benefits of exemption from FERC licensing for BCH strongly outweigh any potential future uncertainties of accepting the USFS SUP. Therefore, staff recommends Option 1 for City Council to authorize the City Manager to execute the current SUP and provide it to FERC by the August 31, 2014 deadline.

ATTACHMENTS

A. BCH Map
B. Order Granting Surrender of License and Issuance of a Conduit Exemption from Licensing for P-1005
C. July 2014 Special Use Permit Documentation

Boulder Canyon Hydroelectric Project

Features under Federal Jurisdiction with a FERC License:
- Barker Dam & Reservoir (FERC)
- Barker Gravity Pipeline (FERC)
- Kossler Reservoir (FERC)
- Boulder Canyon Hydroelectric Penstock (FERC)
- Boulder Canyon Hydroelectric Plant (FERC)

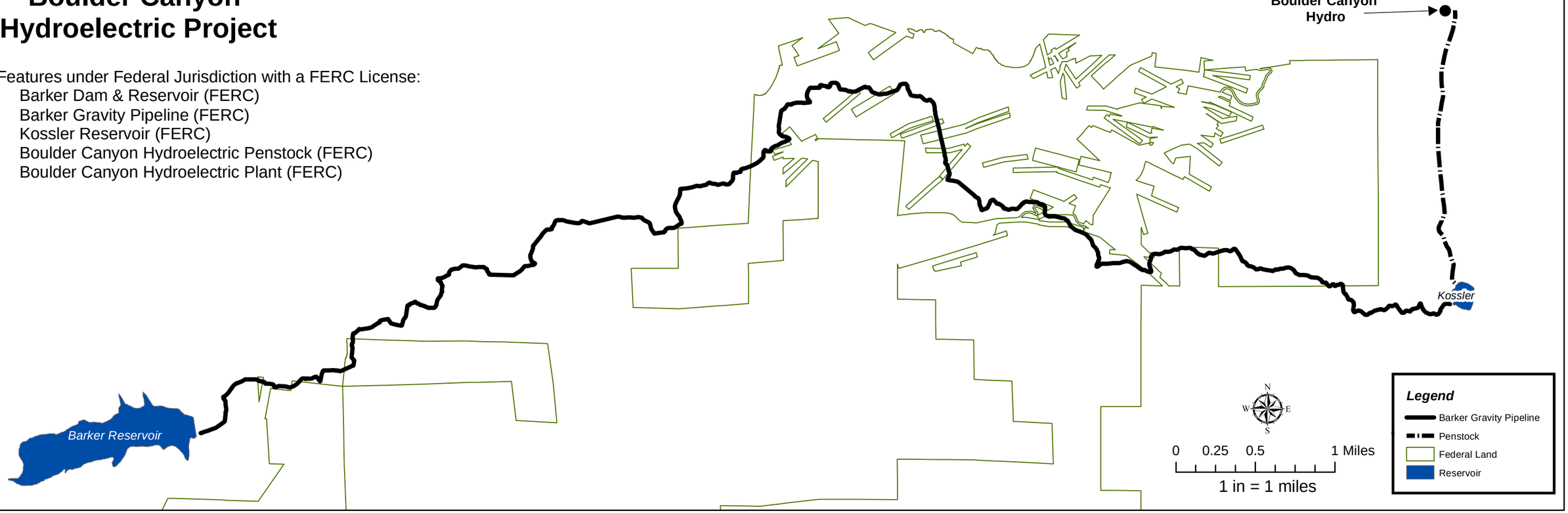

Boulder Canyon Hydroelectric Project

Features under Federal Jurisdiction with a FERC License Exemption:
- Portions of Barker Gravity Pipeline (USFS)
- Boulder Canyon Hydroelectric Plant (FERC)

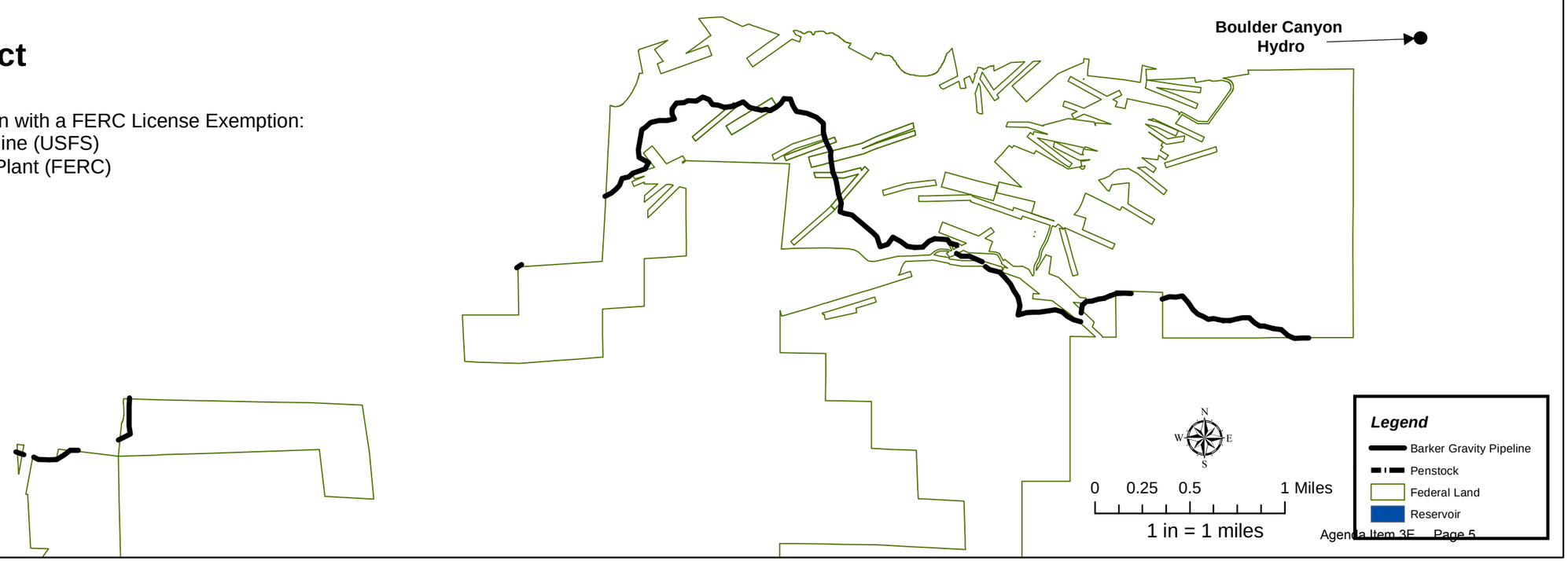

133 FERC ¶ 62,125
UNITED STATES OF AMERICA
FEDERAL ENERGY REGULATORY COMMISSION

City of Boulder, Colorado Project No. 1005-011

ORDER GRANTING EXEMPTION FROM LICENSING (CONDUIT) AND ACCEPTING SURRENDER OF LICENSE

(Issued November 05, 2010)

1. On March 10, 2009, and as supplemented July 7, 13, and 24, 2009, the City of Boulder, Colorado (City), filed an application to exempt its currently licensed Boulder Canyon Hydroelectric Project from the licensing requirements of Part I of the Federal Power Act (FPA)[1] and to surrender its license for the project.

2. The small conduit hydropower project would be located on the City's municipal water supply system located in Boulder County, Colorado. The City owns all the land and structures necessary to develop and operate the exempted project.[2] The project would not occupy any federal lands. As discussed below, I am granting a conduit exemption for this project and accepting surrender of the license, subject to certain terms and conditions.

---

[1] Under Part I of the FPA, the Commission issues licenses to non-federal entities authorizing the construction, operation, and maintenance of water power projects on navigable waters of the United States, on federal lands, and on streams subject to Congress' jurisdiction. 16 U.S.C. §§ 792-823 (2006). Pursuant to section 30 of the FPA, 16 U.S.C. § 823 (2006), the Commission is authorized to exempt from the licensing requirements of Part I of the FPA any facility, with an installed capacity of 40 megawatts or less for a municipal water supply project (not including a dam or other impoundment), that is constructed, operated, or maintained for the generation of electric power and is located on non-federal lands and uses for generation only the hydroelectric potential of a manmade conduit, which is operated for the distribution of water for agricultural, municipal, or industrial consumption (and not primarily for the generation of electricity).

[2] The application contains documentation that the City has the necessary property rights to develop and operate the project.

Background

3. The Boulder Canyon Hydroelectric Project was first licensed in 1939,[3] and relicensed in 1981, with an expiration date of August 31, 2009.[4]

4. Rather than seek to relicense the project, on August 30, 2004, the City filed a timely notice of intent (NOI) to file an application for a conduit exemption. The deadline for filing a new license or exemption application for the project was August 31, 2007, because an applicant who indicates in an NOI that it will file a new license or exemption must file its new application at least 24 months before its existing license expires.[5] The City did not file an application for a new license or exemption by this deadline; therefore, on September 13, 2007, the Commission issued a notice soliciting license applications for the Boulder Canyon Project from potential applicants other than the City.[6] In response, on September 14, 2007, the City filed a second NOI to file a conduit exemption for the Boulder Canyon Project and also requested that the Commission waive section 16.25 of the Commission's regulations to allow the City to file an application less than 24 months prior to expiration of its current license. On September 19, 2007, Commission staff granted the City's request and accepted the City's NOI to file an application for exemption within 18 months of the date of the waiver request (by March 16, 2009). No other entities filed an NOI to file a development application for this site.

5. On March 10, 2009, the City filed an application for a conduit exemption and for surrender of its project license.

---

[3] Federal Power Commission Twentieth Annual Report at 122 (1940). Since the project occupied lands within the Roosevelt National Forest, it was required to be licensed pursuant to section 23(b) of the FPA. *See* 16 U.S.C. § 817(b)(1) (2006).

[4] *Public Service Company of Colorado*, 15 FERC ¶ 62,115 (1981). In 2000, the Commission authorized the Public Service Company of Colorado to transfer the license to the City. *Public Service Company of Colorado; City of Boulder, Colorado*, 93 FERC ¶ 62,046 (2000). On August 31, 2009, the license for the project expired. Since then, the project has been operating on an annual license. *See* 16 U.S.C. § 808(a)(1) (2006).

[5] 18 C.F.R. § 16.25(a) (2010).

[6] If an existing licensee, who indicates in an NOI that it will file a new license or an exemption, does not file its new application at least 24 months before its existing license expires, the Commission will issue a notice soliciting applications for the project from potential applicants other than the existing licensee. 18 C.F.R. § 16.25(a) (2010).

6. The Boulder Canyon Project as licensed includes the 200-acre Barker Reservoir, which has a gross storage capacity of 11,687 acre-feet and is impounded by Barker Dam; the 175-foot-high, 720-foot-long Barker Dam, which has a 127-foot-long spillway with a crest elevation of 8181.5 feet mean sea level (msl); an outlet gate control structure that leads from the spillway to a 5-foot-wide, 225-foot-long concrete tunnel that conveys water to a valve house and then to a 36-inch-diameter, 11.7-mile-long, concrete Barker gravity pipeline. Water from the pipeline empties into the project's 12.25-acre Kossler Reservoir, a reregulating reservoir with a gross storage capacity of 165 acre-feet at maximum pool elevation (7717.6 feet msl). The Kossler Reservoir is formed by three earth embankment structures: (1) the 18-foot-high, 450-foot-long Southwest Dam; (2) the 20-foot-high, 180-foot-long Northeast Dam; and (3) the 5-foot-high, 420-foot-long West Dam. From the Kossler Reservoir, water enters a concrete outlet structure, including trash screens and a gate, which connects to a 9,340-foot-long steel penstock, and enters the powerhouse, containing two 10-MW generators.[7] The water is discharged into Boulder Creek, where it is later withdrawn for water treatment, irrigation, and municipal storage. The project's Barker gravity pipeline occupies approximately 36 acres of federal land within the Roosevelt National Forest.

7. The City proposes to surrender the following licensed project features: (1) the Barker Reservoir; (2) the Barker Dam; (3) the outlet structure; (4) the concrete tunnel; (5) the valve house; (6) the concrete Barker gravity pipeline; (7) the Kossler Reservoir, including the Southwest Dam, the Northeast Dam, and the West Dam; (8) the concrete outlet structure, including the trash screens and a gate; and (9) the steel penstock.

8. The exempted project would consist of the existing powerhouse containing one generating unit having an installed capacity of 10 MW and appurtenant facilities. The City estimates that the project would have an average annual generation of 11.6 megawatt-hours that would be sold to a local utility. The City states that the surrender of its project license and issuance of a conduit exemption would not result in any change to the operation of its municipal water supply system.

9. On October 9, 2009, public notice of the application was issued, establishing December 8, 2009, as the deadline for filing comments and motions to intervene. No motions to intervene were filed. On December 2, 2009, the U.S. Department of the Interior stated that it had no comments on the proposed project. On December 3, 2009, the U.S. Forest Service, Rocky Mountain Region (Forest Service) filed comments on the proposed project, and on March 19, 2010, the City filed a response. These comments are discussed below.

---

[7] In late 2000, the windings on one generator ceased operating. Since this time, the project has only been operating one of the 10-MW generators.

10. An Environmental Assessment (EA) was prepared by Commission staff and is being issued concurrently with this order. The EA contains background information, analysis of impacts, and support for related exemption articles. I conclude that based on the record of the proceeding, including the EA, granting surrender of the license and issuing the exemption for the Boulder Canyon Hydroelectric Project would not constitute a major federal action significantly affecting the quality of the human environment.

11. I have fully considered the record of this proceeding in determining whether, and under what conditions, to accept the surrender of the license and issue this conduit exemption.

Section 30(c) Conditions

12. Section 30(c) of the FPA[8] requires the Commission to include in its conduit exemptions such terms and conditions as may be prescribed by federal and state fish and wildlife agencies to prevent loss of, or damage to, fish and wildlife resources and to otherwise carry out the purposes of the Fish and Wildlife Coordination Act.[9] Standard Article 2 of this exemption requires compliance with the terms and conditions prepared by federal or state fish and wildlife agencies to protect fish and wildlife resources. No federal or state fish and wildlife agency submitted terms and conditions for this exemption.

Threatened and Endangered Species

13. Section 7(a)(2) of the Endangered Species Act of 1973 (ESA)[10] requires federal agencies to ensure that their actions are not likely to jeopardize the continued existence of endangered or threatened species or result in the destruction or adverse modification of the critical habitat of such species.

14. On October 29, 2009, Commission staff sent a letter to the U.S. Fish and Wildlife Service (FWS) seeking concurrence with staff's determination that surrendering the license and issuing a conduit exemption would not be likely to adversely affect the Preble's meadow jumping mouse (*Zapus hudsonius preblei*), whooping crane (*Grus Americana*), interior least tern (*Sterna antillarum athalassos*), piping plover (*Charadrius melodus*), or pallid sturgeon (*Scaphirhynchus albus*). By letter filed December 10, 2009,

---

[8] 16 U.S.C. § 823a(c) (2006).

[9] 16 U.S.C. §§ 661-667e (2006).

[10] 16 U.S.C. § 1536(a) (2006).

the FWS concurred that the proposed action is not likely to adversely affect the above-listed species. Therefore, no further consultation under section 7 of the ESA is required.

National Historic Preservation Act

15. Under section 106 of the National Historic Preservation Act (NHPA)[11] and its implementing regulations,[12] federal agencies must take into account the effect of the proposed undertaking on properties listed or eligible for listing in the National Register of Historic Places (defined as historic properties) and afford the Advisory Council on Historic Preservation (Advisory Council) a reasonable opportunity to comment on such undertakings. This generally requires the Commission to consult with the State Historic Preservation Officer (SHPO) to determine whether and how a proposed action may affect historic properties, and to seek ways to avoid or minimize any adverse effects.

16. The Boulder Canyon Hydroelectric Project, completed in 1910, has been determined by the Colorado SHPO to be eligible for inclusion in the National Register. The EA finds that accepting the surrender of the license would have an adverse effect on the identified historic resources because the Barker Reservoir, the Barker Dam, the Barker gravity pipeline, the Kossler Reservoir (including the Southwest Dam, the Northeast Dam, and the West Dam), and the steel penstock leading to the powerhouse will no longer be under the federal protection afforded by the license. The EA notes that a memorandum of agreement (MOA) with the SHPO would adequately mitigate any adverse effects that would occur due to surrender of the license.

17. The Commission executed an MOA with the Colorado SHPO on May 10, 2010, and invited the Advisory Council to concur with the stipulations of the MOA. On March 23, 2010, the Advisory Council stated that its participation was not necessary. The MOA requires that, as mitigation for removing the historic project features from federal jurisdiction, the City update its Archeological Inventory Form for approval by the SHPO before the conduit exemption takes effect. The MOA also sets forth measures to be carried out regarding the documentation of historic structures, resolving disputes, and amending or terminating the agreement, and demonstrates that the Commission has satisfied its responsibilities under section 106 of the NHPA.

18. Subsequent to the MOA's execution, the City completed the mitigation measures stipulated in the MOA. On August 10, 2010, the Colorado SHPO approved the City's implementation of the mitigation measures and determined that the City had satisfied the requirements of the MOA.

---

[11] 16 U.S.C. § 470 (2006) *et seq*.

[12] 36 C.F.R. Part 800 (2010).

Special Use Permit

19. A portion of the licensed Boulder Canyon Hydroelectric Project's Barker gravity pipeline is located on national forest system lands within the Roosevelt National Forest, and the license authorizes the pipeline's use and occupation of these federal lands.[13] Once the surrender of the license takes effect, the Commission will no longer have jurisdiction to regulate the gravity pipeline. Under the conduit exemption, the Commission would have jurisdiction only over the powerhouse and appurtenant facilities. To ensure that there is continuous federal authority over the gravity pipeline and no trespass by the City, the City must obtain a special use permit from the Forest Service for the use of federal lands before surrender becomes effective.

20. The City applied for a special use permit for use of the Barker gravity pipeline on federal land in October 2008. On August 27, 2010, the Forest Service sent a special use permit to the City for its review and acceptance. In a letter filed September 2, 2010, the Forest Service stated that the City made modifications to the permit, which will need to be reviewed and approved by the Forest Service. At this time, the special use permit has not been issued. The Forest Service requests that the Commission defer the surrender of the project license and issuance of the conduit exemption until the Forest Service issues a special use permit to the City.[14]

21. This order accepts the surrender of the license, effective on the issuance of a special use permit from the Forest Service.[15] Ordering Paragraph (F) requires the City to obtain a special use permit from the Forest Service within 90 days of the issuance date of this order. Until the City obtains the special use permit, neither the license surrender nor the conduit exemption issuance will take effect and, the project will continue under the annual license.

---

[13] The project's Barker gravity pipeline occupies approximately 36 acres of federal land.

[14] *See* Forest Service's letters filed December 3, 2009, September 1, 2010, and September 2, 2010.

[15] *See Pacific Gas and Electric Company*, 85 FERC ¶ 61,411, at 62,559 (1998) (order amending 14 licensed projects to exclude transmission lines from the project boundaries, effective on the licensee's receipt of the all necessary permits from the U.S. Forest Service and/or the U.S. Bureau of Reclamation).

Administrative Conditions

A. Annual Charges

22. The Commission collects annual charges from exemptees for the administration of its hydropower program. In accordance with the Commission's regulations, for a municipality exemptee, the annual charge will begin accruing the date the exemption takes effect.[16] Article 7 provides for the collection of funds for the administration of the Commission's hydropower program.

B. Exhibit F and G Drawings

23. Although the Exhibit F drawings filed on March 10, 2009, comply with 18 C.F.R § 4.39, the drawings fail to meet the requirements of section 4.41(g) of the Commission's regulations, which require the applicant to specify the principal project features of the exemption. The Exhibit F drawings represent the project powerhouse as currently licensed and must be revised to show the exempted facilities. In particular, the Exhibit F drawings filed on March 10, 2009, must denote which generator will be used for the project and which generator is out-of-service and thus not authorized.

24. The Exhibit G drawing filed on March 10, 2009, does not conform to the Commission's regulations at 18 C.F.R. § 4.39. To ensure that the drawing is read correctly, the Commission requires the title, numerical and graphical scale, and other pertinent information concerning the map to be enclosed in a box in the lower right hand corner of each sheet.[17]

25. Ordering Paragraph (E) requires the exemptee to file revised Exhibit F and G drawings for Commission approval.

C. Operation and Maintenance

26. Ensuring that the exempted project is fit for use is an important public interest function of the Commission. Article 8 states that if the exemptee causes or allows essential project property to be removed or destroyed or to become unfit for use, without adequate replacement, the Commission will deem it the intent of the exemptee to surrender the exemption.

---

[16] 18 C.F.R. § 11.1(d)(6) (2010).

[17] 18 C.F.R. § 4.39(a) (2010).

D. Exemptee Liability

27. Section 10(c) of the FPA provides that licensees, and not the United States, are liable for "damages occasioned to the property of others by the construction, maintenance, or operation of the project works … ."[18] To clarify that exemptees would be similarly liable, Article 9 states that the exemptee is liable for damages to the property of others.

E. Property Rights

28. Pursuant to 18 C.F.R. § 4.31(c)(2)(ii), an applicant for exemption is required to demonstrate that, at the time it files its exemption application, it has sufficient rights to any non-federal land and facilities required for the construction and operation of the project. However, because an exemption is issued in perpetuity, Article 10 states that the Commission will revoke the exemption, if the exemptee fails to maintain sufficient rights to comply with the terms and conditions of the exemption.

The Director orders:

(A) The surrender of the license for the Boulder Canyon Project No. 1005 is accepted, effective upon the United States Forest Service issuing a special use permit to the City of Boulder, Colorado, for the use and occupancy of its lands.

(B) The Boulder Canyon Project No. 1005 is exempted from the licensing requirements of Part I of the Federal Power Act, subject to the completion of the requirements of Ordering Paragraph (A) and the articles specified below.

(C) The exempted project consists of:

(1) All lands, to the extent of the exemptee's interests in those lands, enclosed by the project boundary shown by Exhibit G-1 filed on March 10, 2009.

(2) The following project works: an existing powerhouse containing one generating unit having an installed capacity of 10 megawatts and appurtenant facilities. These project works are more specifically shown and described by those portions of Exhibit A, F, and G below:

Exhibit A: Exhibit A, pages A-7 through A-12 filed on March 10, 2009.

Exhibit F: The following Exhibit F drawings filed on March 10, 2009.

---

[18] 16 U.S.C. § 803(c) (2006).

Exhibit No.	FERC Drawing No.	Drawing Title
F-1	P-1005-1	Plan View 1
F-2	P-1005-2	Elevation View
F-3	P-1005-3	Plan and Section A-A View
F-4	P-1005-4	Plan View 2

Exhibit G: The following Exhibit G drawings filed on March 10, 2009.

Exhibit No.	FERC Drawing No.	Drawing Title
G-1	P-1005-5	Location Map

(3) All of the structures, fixtures, equipment, or facilities used to operate or maintain the project, or other rights that are necessary or appropriate in the operation or maintenance of the project.

(D) The Exhibit A described above is approved and made part of the exemption. The Exhibit F drawings filed on March 10, 2009, and the Exhibit G drawing filed on March 10, 2009, are not approved.

(E) Within 45 days of the effective date of this exemption, the exemptee shall file for Commission approval, revised Exhibits F-1 through F-5 drawings and a revised Exhibit G-1 drawing that comply with the Commission's regulations at 18 C.F.R. §§ 4.39 and 4.41(h) (2010).

(F) Within 90 days of the issuance date of this order, the exemptee shall obtain and file a copy of the U.S. Forest Service's special use permit with the Commission.

(G) This exemption is also subject to the articles set forth in Form E-1 entitled "Standard Terms and Conditions of Exemption from Licensing" (attached), and the following additional articles:

Article 7. *Administrative Annual Charges*. The exemptee shall pay the United States annual charges, starting the date the exemption takes effect, as determined in accordance with the provisions of the Commission's regulations in effect from time to time, for the purpose of reimbursing the United States for the cost of administration of the Commission's hydropower program. The authorized installed capacity for that purpose is 10,000 kilowatts.

Article 8. *Operation and Maintenance*. The Commission will deem it the intent of the exemptee to surrender this exemption if essential project property is removed or destroyed or becomes unfit for use, without adequate replacement; or if the project is abandoned or good faith project operation or maintenance is discontinued; or if the exemptee refuses or neglects to comply with the terms of the exemption and the lawful orders of the Commission.

Article 9. *Liability*. The exemptee shall be liable for all damages occasioned to the property of others by the construction, operation, or maintenance of the project works or works appurtenant or accessory thereto, constructed under this exemption and in no event shall the United States be liable therefore.

Article 10. *Property Rights*. The Commission reserves the right to require the exemptee to gain additional property rights, if such rights become necessary to develop, operate, or maintain the project or to achieve compliance with the terms and conditions of the exemption. The Commission will revoke the exemption if, at any time, the exemptee does not hold sufficient property rights in the land or project works necessary to develop, maintain, and operate the project.

(H) This order is issued under authority delegated to the Director and constitutes final agency action. Any party may file a request for rehearing of this order within 30 days from the date of its issuance, as provided in section 313(a) of the FPA, 16 U.S.C. § 825 (2006), and section 385.713 of the Commission's regulations, 18 C.F.R. § 385.713 (2010). The filing of a request for rehearing does not operate as a stay of the effective date of this exemption or any of its requirements.

William Y. Guey-Lee
Chief, Engineering and Jurisdiction Branch
Division of Hydropower Administration
and Compliance

E-1 Form

Standard Terms and Conditions of Exemption from Licensing
18 C.F.R. § 4.94 (2010)

Any exemption granted under § 4.93 of the Commission's regulations, 18 C.F.R. § 4.93 (2010), for a small conduit hydroelectric facility is subject to the following standard terms and conditions:

Article 1. The Commission reserves the right to conduct investigations under sections 4(g), 306, 307, and 311 of the Federal Power Act with respect to any acts, complaints, facts, conditions, practices, or other matters related to the construction, operation, or maintenance of the exempt facility. If any term or condition of the exemption is violated, the Commission may revoke the exemption, issue a suitable order under section 4(g) of the Federal Power Act, or take appropriate action for enforcement, forfeiture, or penalties under Part III of the Federal Power Act.

Article 2. The construction, operation, and maintenance of the exempt project must comply with any terms and conditions that the United States Fish and Wildlife Service and any state fish and wildlife agencies have determined are appropriate to prevent loss of, or damage to, fish and wildlife resources or otherwise to carry out the purposes of the Fish and Wildlife Coordination Act, as specified in Exhibit E of the application for exemption from licensing or in the comments submitted in response to the notice of the exemption application.

Article 3. The Commission may revoke this exemption if actual construction of any proposed generating facilities has not begun within two years or has not been completed within four years from the effective date of this exemption. If an exemption is revoked under this article, the Commission will not accept from the prior exemption holder a subsequent application for exemption from licensing or a notice of exemption from licensing for the same project within two years of the revocation.

Article 4. In order to best develop, conserve, and utilize in the public interest the water resources of the region, the Commission may require that the exempt facilities be modified in structure or operation or may revoke this exemption.

Article 5. The Commission may revoke this exemption if, in the application process, material discrepancies, inaccuracies or falsehoods were made by or on behalf of the applicant.

Article 6. Before transferring any property interests in the exempt project, the exemption holder must inform the transferee of the terms and conditions of the exemption. Within 30 days of transferring the property interests, the exemption holder must inform the Commission of the identity and address of the transferee.

ENVIRONMENTAL ASSESSMENT

APPLICATION FOR SURRENDER OF LICENSE AND
SMALL CONDUIT HYDROELECTRIC EXEMPTION

BOULDER CANYON HYDROELECTRIC PROJECT
COLORADO
FERC PROJECT NO. 1005-011

September 2010

Federal Energy Regulatory Commission
Office of Energy Projects
Division of Hydropower Administration and Compliance
888 First Street, NE.
Washington, D.C. 20426

ENVIRONMENTAL ASSESSMENT

Federal Energy Regulatory Commission
Office of Energy Projects
Division of Hydropower Administration and Compliance
Washington, D.C.

Boulder Canyon Hydroelectric Project
FERC Project No. 1005-011

1.0 INTRODUCTION

1.1 Application

Application Type:	Application for Surrender of License and Small Conduit Exemption
Date filed:	March 10, 2009
Applicant:	City of Boulder, Colorado
Project Location:	Middle Boulder Creek, Boulder County, Colorado
Project Capacity:	10 megawatts (MW)
Federal Lands:	36.64 acres

1.2 Purpose of Action

On April 28, 1981, the Commission issued a license for the Boulder Canyon Hydroelectric Project, located on Middle Boulder Creek in Boulder County, Colorado, and on lands partially within the Roosevelt National Forest. The issued project works consist of: (1) a 175-foot-high and 720-foot-long concrete dam (Barker Dam) with a crest elevation of 8181.5 feet msl); (2) a reservoir (Barker Reservoir) having a surface area of 200 acres; (3) a 225-foot-long tunnel connecting to an 11.7-mile-long pipeline (Barker Gravity Line); (4) a forebay (Kossler Reservoir) formed by three embankment dams; (5) a steel penstock; and (6) a powerhouse. The project is operated for peaking power.

On March 10, 2009, the City of Boulder, Colorado (City) filed an application with the Commission seeking to exempt its currently licensed Boulder Canyon Hydroelectric Project from the licensing requirements of Part I of the Federal Power Act (FPA) and to surrender certain licensed project facilities. The current project license expired on August 31, 2009, at which time the City was issued an annual license to operate the project under terms and conditions of the previous license until a new license is issued, or until the project is otherwise disposed.[19]

---

[19] The Commission issued a Notice of Authorization for Continued Project (continued)

The license was transferred to the City in 2001.[20] At that time, the City's primary purpose for the project's facilities focused on the City's municipal water supply system rather than hydroelectric generation. The City states that the project's primary purpose has not changed and, as a result, the City believes that a small conduit exemption best reflects the principal water-supply use of the project's facilities while preserving the limited power production potential that exists at the project.

The exempted project would consist of the existing powerhouse containing one generating unit having an installed capacity of 10 MW and appurtenant facilities. The City estimates that the project would have an average annual generation of 11.6 megawatt-hours that would be sold to a local utility.

Commission staff has conducted an environmental review of the proposal to determine whether and under what conditions the City's application should be approved. This environmental assessment (EA) addresses all relevant issues raised in this proceeding and will be used in the Commission's decision on the City's application.

1.3 Statutory and Regulatory Requirements

1.3.1 Endangered Species Act

Section 7 of the Endangered Species Act (ESA) requires federal agencies to ensure that their actions are not likely to jeopardize the continued existence of endangered or threatened species or result in the destruction or adverse modification of the critical habitat of such species.

On October 29, 2009, Commission staff sent a letter to the U.S. Fish and Wildlife Service (FWS) seeking concurrence with staff's determination that surrendering the license and issuing a conduit exemption would not likely adversely affect the Preble's meadow jumping mouse (*Zapus hudsonius preblei*), whooping crane (*Grus Americana*), interior least tern (*Sterna antillarum athalassos*), piping plover (*Charadrius melodus*), or pallid sturgeon (*Scaphirhynchus albus*). By letter filed December 3, 2009, the FWS concurred that the proposed action is not likely to adversely affect the above-listed species.

1.3.2 National Historic Preservation Act

Operation on September 2, 2009.

[20] *See* 93 FERC ¶ 62,046 (2000).

Section 106 of the National Historic Preservation Act (NHPA) requires federal agencies to take into account the effect of the proposed undertaking on any district, site, building, structure, or object that is included in or eligible for inclusion in the National Register of Historic Places (National Register). Federal agencies must afford the Advisory Council on Historic Preservation, established under Title II of NHPA, a reasonable opportunity to comment on such undertakings.

By letter dated January 15, 2010, Commission staff requested concurrence from the State Historic Preservation Officer (SHPO) of the Colorado Historical Society Office of Archaeology & Historic Preservation with its determination that surrender of the license and issuance of a conduit exemption would have an adverse effect to the Boulder Canyon Hydroelectric Project, which is a historic property, but despite this finding mitigation is not necessary. On February 3, 2010, the SHPO filed a letter stating that it did not agree and that a Memorandum of Agreement (MOA) is necessary to mitigate the adverse effect. By letter dated March 3, 2010, Commission staff invited the Advisory Council (Advisory Council) on Historic Preservation to participate in the consultation process, and by letter filed March 23, 2010, the Advisory Council stated that its participation is not needed. An MOA between the Commission and SHPO, with the City as a concurring party, was executed on May 20, 2010. The MOA sets forth measures to be carried out regarding the treatment of historic structures, resolving disputes, and amending or terminating the agreement, and demonstrates that the Commission has satisfied its responsibilities under section 106 of the NHPA.

1.4 Public Review and Comment

On October 9, 2009, Commission staff issued a Notice of Application Accepted for Filing; Soliciting Comments, Protests, and Motions to Intervene; Ready for Environmental Analysis; and Soliciting Recommendations, and Terms and Conditions. The notice set December 9, 2009, as the deadline for filing comments.

On December 2, 2009, the U.S. Department of the Interior stated that it has no comments on the application.

On December 3, 2009, the U.S. Forest Service (Forest Service) filed a letter in response to the public notice. The Forest Service states that in 2008, the City applied for authorization to operate and maintain the project pipeline on Forest Service land, but a special use permit has not yet been issued. The Forest Service states that, although it does not object to the conversion of the license to a conduit exemption, it requests that the Commission defer acting on the conversion application until the Forest Service issues a special use permit to the City. The Forest Service's request is discussed in section 3.2.3 (Recreation and Land Use) below.

2.0 PROPOSED ACTION AND ALTERNATIVES

2.1 Proposed Action

The City proposes to surrender its license for the Boulder Canyon Hydroelectric Project and seeks approval for a conduit exemption. Specifically, the City proposes a change in project boundaries to remove most of the project facilities from the Commission's jurisdiction, including the project's dam, reservoir, gravity pipeline, forebay, and steel penstock. The proposed project boundary for the conduit exemption would include the existing powerhouse and appurtenant facilities. There would be no immediate physical changes to existing project facilities, and no new facilities are proposed. Operation of the City's municipal water supply system and operation of the hydroelectric facilities would otherwise continue without change.

2.2 Action Alternative

No action alternatives have been identified for consideration.

2.3 No-Action Alternative

Under this alternative, the project license would not be surrendered and a conduit exemption would not be issued, the project would be subject to an annual license and all applicable license requirements, until a new license is issued or the project is otherwise disposed. The project boundary would stay the same, the project facilities would remain within the project boundary and under Commission jurisdiction.

3.0 ENVIRONMENTAL ANALYSIS

Unless otherwise noted, the information in the following Affected Environment sections is derived from the Environmental Report (Exhibit E) of the City's application. Because the proposed action does not include any changes to project operations or ground disturbance, there would be no effects to geology and soils, fisheries and aquatic resources, terrestrial resources, aesthetics, or socioeconomics. Thus, those resource areas are excluded from the analysis below. However, it should be noted that because the proposed action would remove the project's dam, reservoir, gravity pipeline, forebay, and steel penstock from the Commission's jurisdiction, any future environmental effects resulting from the operation and maintenance of these facilities would be outside the Commission's regular oversight authority and responsibility.

3.1 General Setting

The project is located on Middle Boulder Creek, west of the city of Boulder, Colorado, in the easternmost range of the Rocky Mountains known as the Front Range.

From the Barker Dam, Middle Boulder Creek flows eastward until it joins North Boulder Creek, at which point it becomes known as Boulder Creek. The entire Boulder Creek watershed has a drainage area of about 439 square miles. Significant tributaries to Boulder Creek include North, Middle, and South Boulder Creeks, Four Mile Creek, Bear Creek, Dry Creek, Rock Creek, and Coal Creek. Boulder Creek receives flow contributions from various sources, including the Boulder Canyon Hydro Plant, the Boulder Creek Supply Canal, Baseline Reservoir, Valmont Reservoir, Panama Reservoir, several municipal wastewater treatment plants, irrigation return flows, and storm water runoff. Besides residential development near the Barker Reservoir, near the town of Nederland, the project area is sparsely developed. The uplands along Boulder Creek consist of ponderosa pine woodlands and lower mountain coniferous forests, deep canyons, intermittent aspen forests, and mixed grasslands.

3.2 Proposed Action

3.2.1 Water Resources

Water Quantity

Affected Environment

Flows in the Middle Boulder Creek and Boulder Creek watersheds are determined primarily through water rights in Colorado. The City currently owns much of the water rights in the Middle Boulder Creek watershed, but much of the water originating from the basin above Barker Reservoir must be passed to satisfy more senior water rights on main Boulder Creek and the South Platte River.

Under the previous ownership of the project's facilities by Public Service Company of Colorado, annual stream flow in Middle Boulder Creek below Barker Dam averaged only about 44 percent of the annual inflow to Barker Reservoir. Thus, the stream flow was lowest from mid-September through April, when the flow below Barker Dam was usually zero. Following the City's purchase of the project in 2001, it established voluntary minimum flows in Middle Boulder Creek below Barker Dam to avoid these periods of dry stream conditions. The City, at present, voluntarily releases water from Barker Reservoir to Middle Boulder Creek to maintain a minimum flow of 3 cubic feet per second (cfs) in the winter season and 4 cfs in the summer season. The City states that it plans to continue these releases except during drought or other emergency conditions.

On March 9, 2009, a meeting took place between Colorado Water Conservation Board (CWCB) and the City to discuss if there is a need to protect minimum instream flow releases from Barker Dam against any future diversions (as the water flows through Middle Boulder Creek to the reach of Boulder Creek that is protected under instream

flow rights by CWCB). At the meeting, it was concluded that it is highly unlikely that any new diversions will occur from Middle Boulder Creek. However, the City agreed to support a new instream flow appropriation by the CWCB if it desires to file for a new junior water right in 2011 to protect against any future diversions from Middle Boulder Creek.

Environmental Effects

Water rights will continue to dictate the flows in Middle Boulder Creek and Boulder Creek, as has been the case, even after removal of Commission jurisdiction for these water resources. The quantity of flow in the river, or its consumptive uses, is determined by state water right precedent. Because the proposed action does not include any changes to project operations, lands, or facilities, Commission staff finds that surrendering the license and issuing a conduit exemption would result in no effect to water quantity or the water flows at the project site.

Water Quality

Affected Environment

Currently, local, state, and federal entities monitor water quality in the Middle Boulder Creek Watershed to identify the condition of streams and reservoirs in support of designated uses, such as drinking water supply, maintaining aquatic life, and recreation. Also, the City routinely monitors, and the Colorado Water Quality Control Division evaluates, water quality in Middle Boulder Creek, Barker Reservoir, and Kossler Reservoir to ensure the waters support designated uses and to track potential sources of pollution or identify treatment needs. The City performs monthly monitoring at several locations along the Boulder Creek watershed using water quality indicators, such as temperature, dissolved oxygen, turbidity, suspended and dissolved solids, nutrients, metals, algae, and chlorophyll.

Environmental Effects

If the proposed action is approved, it would remove all municipal water resources currently in the project boundary from Commission jurisdiction. However, it would still be the responsibility of the City to meet certain federal, state, and local standards, such as the Clean Water Act or any municipal ordinances. Also, other regulatory entities would ensure the project meets water quality requirements and standards in the future. Because other entities would still ensure water quality standards are being met and because the proposed action does not include any changes to project operations, lands, or facilities, Commission staff finds that surrendering the license and issuing a conduit exemption would result in no effect to water quality in the current project area.

3.2.2 Rare, Threatened, and Endangered Species

Affected Environment

Preble's meadow jumping mouse (Preble's) is listed as threatened under the ESA. Preble's is typically found in low undergrowth consisting of grasses and forbs, open wet meadows, and riparian corridors near forests, or where tall shrubs and low trees provide adequate cover. Along Colorado's Front Range, Preble's is found below 7,800 feet in elevation, generally in lowlands with medium to high moisture along permanent or intermittent streams and irrigation canals. The Boulder Creek corridor in the project vicinity has marginally suitable habitat for Preble's, but no trapping surveys have been conducted along Boulder Creek within five miles of the project area.

In a 1994 biological opinion (BO) developed by the FWS for multiple water projects throughout Colorado (including the Boulder Canyon Hydroelectric Project) that have special use permits from the Forest Service, the FWS found that these projects caused deterioration of habitat for several endangered species (whooping crane, interior least tern, piping plover, and pallid sturgeon) on the Platte River in Nebraska. The BO included a reasonable and prudent alternative (RPA) that has been implemented by the City.

Potential habitat may exist within the project vicinity for several species of special concern, according to the Colorado Division of Wildlife (Colorado DOW) (i.e., northern leopard frog, American peregrine falcon, Townsend's big-eared bat, and common garter snake), and species considered rare or imperiled by the Colorado Natural Heritage Program (i.e., Moss' elfin butterfly and two-spotted skipper). Although potential habitat for some of the above species may occur in the project area, Commission staff has not identified any species' surveys that confirm the presence of these species in the project area.

Environmental Effects

By letter dated October 29, 2009, Commission staff sent a letter to the FWS seeking concurrence with its determination that because the proposed action does not include any changes to project operations, lands, or facilities, surrendering the license and issuing a conduit exemption would not likely adversely affect the Preble's meadow jumping mouse, whooping crane, interior least tern, piping plover, or pallid sturgeon. By letter dated December 3, 2009, the FWS concurs that the proposed action is not likely to adversely affect the above-listed species. The FWS also states that continued implementation of the RPA is under the jurisdiction of the FWS and the Forest Service, and would not be affected by Commission action on the application.

Any future effects to the federally listed species mentioned above that may occur around the project's dam, reservoir, forebay, and steel penstock would be outside of the Commission's jurisdiction, if the proposed action is approved. Any future actions involving the facilities that would be removed from Commission jurisdiction, that may affect federally listed species in the future, would still be protected under section 10 of the ESA.

Although no species surveys exist for state-listed species at the project, the potential exists for some state-listed species to occur in the project area. However, because the proposed action does not include any changes to project operations, lands, or facilities, Commission staff finds that surrendering the license and issuing a conduit exemption would not likely adversely affect any state-listed species. In an email sent to the City filed September 25, 2009, the Colorado DOW states that it does not object to the City's application.

3.2.3 Recreation and Land Use

Affected Environment

The existing project offers only limited recreational opportunities. Fishing is the primary recreational activity at Barker Reservoir and along Middle Boulder Creek; rainbow trout and brook trout are present in the creek and the reservoir is stocked by the Colorado DOW. The licensee is responsible for providing and maintaining several recreational facilities along the shoreline of Barker Reservoir, including picnic areas, parking areas, toilets, trash receptacles, and reservoir access for fishing. The area around Middle Boulder Creek is also used by sightseers, hikers, picnickers, and campers, but the picnicking and camping facilities are not the responsibility of the City. No recreation facilities are provided at the Kossler Reservoir due to limited land suitable for recreation, reservoir size, and fluctuation of water levels.

Boating is not allowed on Barker Reservoir for a combination of safety-related reasons: (1) the fluctuating nature of the reservoir; (2) the steep gradient of the reservoir shoreline; and (3) the notoriously high wind potential (FERC 1981). Public interest in non-motorized boating on Barker Reservoir has been a longstanding issue in the vicinity of the reservoir.[21]

[21] Pursuant to Commission regulations, the City held a joint meeting with interested agencies and members of the public on December 17, 2007. Prior to this meeting, several individuals expressed support for allowing boating on Barker Reservoir.

Most of the lands occupied by the project are owned by the City. The Barker Gravity Line occupies 36.49 acres of the Roosevelt National Forest administered through the Forest Service. The City applied for a special use permit for this pipeline with the Boulder Ranger District of the Roosevelt National Forest in October, 2008. On August 27, 2010, the Forest Service sent a special use permit to the City for its review and acceptance. In a letter filed September 2, 2010, the Forest Service stated that the City made modifications to the permit, which will need to be reviewed and approved by the Forest Service. At this time, the special use permit has not yet been issued. The Forest Service requests that the Commission defer the surrender of the project license and issuance of the conduit exemption until the Forest Service issues a special use permit to the City.

Environmental Effects

Although no physical changes to any project lands, facilities, or operations would occur, approval of the license surrender and issuance of a conduit exemption would change the project boundary and remove Commission jurisdiction over recreation at the project, thus eliminating the its authority to ensure the optimal development of the project's recreational resources. Regarding public interest in boating on Barker Reservoir, losing federal jurisdiction would not likely affect boating opportunities because the Commission concluded in the original project license that boating should not be allowed on the reservoir. Further, recreation on the reservoir is subject to the Boulder Municipal Code. Regarding other recreational activities (i.e. fishing, picnicking, etc.), no related effects would be likely because the City proposes to continue current management practices into the future. However, the Commission would no longer have the authority to require the City to maintain recreational facilities on Barker Reservoir upon the surrender of the license.

Because the City must obtain a special use permit from the Forest Service to use its lands, the Forest Service has requested the Commission defer the surrender of the license and issuance of the conduit exemption until Forest Service has issued the permit. Because the City is not proposing any changes to project facilities, and the project would operate as it does currently, Commission staff does not expect any changes to land use in the future. However, to help ensure that the Forest Service would continue to have authority over the City's occupancy and use of its lands, Commission staff recommends that if the proposed license surrender and issuance of the conduit exemption are approved, the City should be required to obtain the special use permit within 90 days of the issuance date of the order granting surrender.

3.2.4 Cultural Resources

Affected Environment

The Boulder Canyon Hydroelectric Project, completed in 1910, has been determined by the SHPO to be eligible for inclusion in the National Register. In addition to its historic importance as a hydroelectric facility, the project is also important for its role in the development of the City's water supply system. Extensive historic documentation of the project exists, including photographic archives at the Denver and Boulder Public Libraries, and drawings and technical information obtained by the City when it purchased the project. According to a cultural resources inventory completed in 2001, no other sites listed on the National Register are located within the project boundary and none are known to be affected by the project.

Environmental Effects

29. Approving the surrender of the project license and issuance of the conduit exemption would remove some components of this historic property (i.e., the dam, reservoir, gravity pipeline, forebay, and steel penstock) from protection currently afforded under the license. Consequently, Commission staff has determined that approving the surrender of the license would result in adverse effects to this historic property. No mitigation measures are proposed by the City. By letter dated January 15, 2010, Commission staff requested that the SHPO concur with its determination that approving the surrender of the license would be an adverse effect to the project; however, Commission staff found that no mitigation is necessary. On February 3, 2010, the SHPO disagreed and found that an MOA is necessary to mitigate the adverse effect. By letter dated March 3, 2010, Commission staff invited the Advisory Council (Advisory Council) on Historic Preservation to participate in the consultation process, and by letter dated March 23, 2010, the Advisory Council states that its participation is not needed. An MOA between the Commission and SHPO, with the City as a concurring party, was executed on May 20, 2010. The MOA requires the City to update the project's site form (Form 1403 – Architectural Inventory Form) as mitigation for removing certain components of the project from protection currently afforded under the license. Commission staff finds that an updated site form would adequately mitigate any adverse effects that would occur due to the proposed action. Subsequent to the MOA's execution, the City completed the mitigation measures stipulated in the MOA. On August 10, 2010, the SHPO approved the City's mitigation measures and determined that the City satisfied the requirements of the MOA.

3.3 No-Action Alternative

Under the no-action alternative, the project would continue to operate as it has in the past and be subject to the applicable license requirements under its annual license. The project boundary would not change and Commission jurisdiction over project lands, facilities, and operations would not end.

4.0 CONCLUSION AND RECOMMENDATIONS

Based on the information and analyses contained in this EA, Commission staff finds that approval of the proposed action, with the following recommended measure, would not constitute a major federal action significantly affecting the quality of the human environment. To help ensure that the Forest Service would continue to have authority over the City's occupancy and use of its lands, Commission staff recommends that if the proposed license surrender is approved, the City should be required to obtain a special use permit within 90 days of the issuance date of the order granting surrender.

5.0 REFERENCES

Federal Energy Regulatory Commission (FERC). 1981. Order Issuing New License for the Boulder Canyon Hydroelectric Project, FERC No. 1005, Colorado. April 28, 1981.

6.0 LIST OF PREPARERS

Federal Energy Regulatory Commission

Mark Carter, Environmental Biologist
Alisha Chugh, Environmental Protection Specialist

This Page Intentionally Left Blank

Authorization ID: BOU344
Contact ID: BOULDER PUBLIC WORKS
Expiration Date: 12/31/2044
Use Code: 914

FS-2700-4 (10/09)
OMB No. 0596-0082

U.S. DEPARTMENT OF AGRICULTURE
FOREST SERVICE

SPECIAL USE PERMIT

Authority: FEDERAL LAND POLICY AND MGMT ACT, AS AMENDED October 21, 1976

BOULDER, CITY OF, PO BOX 791, PUBLIC WORKS/ADMINISTRATION, BOULDER, CO 80306 (hereinafter "the holder") is authorized to use or occupy National Forest System lands in the Arapaho-Roosevelt National Forest or unit of the National Forest System, subject to the terms and conditions of this special use permit (the permit).

This permit covers 38.7 acres of pipeline and 5.6 acres of pipeline access route or 5.3 miles of pipeline and 3.1 miles of pipeline access routes in the Secs. 6, 7, 8, 9, T. 1 S., R. 71 W., Secs. 1, 2, 9, 17, T. 1 S., R. 72 W., 6TH PRINCIPAL MERIDIAN , ("the permit area"), as shown on the map attached as Appendix A. This permit issued for the purpose of:

operation and maintenance of a 36 inch water transmission pipeline
Pipeline right of way is 60 feet
Pipeline access routes are 15 feet wide

TERMS AND CONDITIONS

I. GENERAL TERMS

A. AUTHORITY. This permit is issued pursuant to FEDERAL LAND POLICY AND MGMT ACT, AS AMENDED October 21, 1976 and 36 CFR Part 251, Subpart B, as amended, and is subject to their provisions.

B. AUTHORIZED OFFICER. The authorized officer is the Forest or Grassland Supervisor or a subordinate officer with delegated authority.

C. TERM. This permit shall expire at midnight on 12/31/2044, years or months from the date of issuance.

D. RENEWAL. This permit is not renewable. Prior to expiration of this permit, the holder may apply for a new permit that would renew the use and occupancy authorized by this permit. Applications for a new permit must be submitted at least 6 months prior to expiration of this permit. Renewal of the use and occupancy authorized by this permit shall be at the sole discretion of the authorized officer. At a minimum, before renewing the use and occupancy authorized by this permit, the authorized officer shall require that (1) the use and occupancy to be authorized by the new permit is consistent with the standards and guidelines in the applicable land management plan; (2) the type of use and occupancy to be authorized by the new permit is the same as the type of use and occupancy authorized by this permit; and (3) the holder is in compliance with all the terms of this permit. The authorized officer may prescribe new terms and conditions when a new permit is issued.

E. AMENDMENT. This permit may be amended in whole or in part by the Forest Service when, at the discretion of the authorized officer, such action is deemed necessary or desirable to incorporate new terms that may be required by law, regulation, directive, the applicable forest land and resource management plan, or projects and activities implementing a land management plan pursuant to 36 CFR Part 215.

F. COMPLIANCE WITH LAWS, REGULATIONS, AND OTHER LEGAL REQUIREMENTS. In exercising the rights and privileges granted by this permit, the holder shall comply with all present and future federal laws and regulations and all present and future state, county, and municipal laws, regulations, and other legal requirements that apply to the permit area, to the extent they do not conflict with federal law, regulation, or policy. The Forest Service assumes no responsibility for enforcing laws, regulations, and other legal requirements that fall under the jurisdiction of other governmental entities.

G. NON-EXCLUSIVE USE. The use or occupancy authorized by this permit is not exclusive. The Forest Service reserves the right of access to the permit area, including a continuing right of physical entry to the permit area for inspection, monitoring, or any other purpose consistent with any right or obligation of the United States under any law or regulation. The Forest Service reserves the right to allow others to use the permit area in any way that is not inconsistent with the holder's rights and privileges under this permit, after consultation with all parties involved. Except for any restrictions that the holder and the authorized officer agree are necessary to protect the installation and operation of authorized temporary

improvements, the lands and waters covered by this permit shall remain open to the public for all lawful purposes.

H. ASSIGNABILITY. This permit is not assignable or transferable.

I. TRANSFER OF TITLE TO THE IMPROVEMENTS.

1. Notification of Transfer. The holder shall notify the authorized officer when a transfer of title to all or part of the authorized improvements is contemplated.

2. Transfer of Title. Any transfer of title to the improvements covered by this permit shall result in termination of the permit. The party who acquires title to the improvements must submit an application for a permit. The Forest Service is not obligated to issue a new permit to the party who acquires title to the improvements. The authorized officer shall determine that the applicant meets requirements under applicable federal regulations.

II. IMPROVEMENTS

A. LIMITATIONS ON USE. Nothing in this permit gives or implies permission to build or maintain any structure or facility or to conduct any activity, unless specifically authorized by this permit. Any use not specifically authorized by this permit must be proposed in accordance with 36 CFR 251.54. Approval of such a proposal through issuance of a new permit or permit amendment is at the sole discretion of the authorized officer.

B. PLANS. All plans for development, layout, construction, reconstruction, or alteration of improvements in the permit area, as well as revisions to those plans must be prepared by a professional engineer, architect, landscape architect, or other qualified professional based on federal employment standards acceptable to the authorized officer. These plans and plan revisions must have written approval from the authorized officer before they are implemented. The authorized officer may require the holder to furnish as-built plans, maps, or surveys upon completion of the work.

B. CONSTRUCTION. Any construction authorized by this permit shall commence by N/A and shall be completed by N/A.

III. OPERATIONS.

A. PERIOD OF USE. Use or occupancy of the permit area shall be exercised at least days each year.

B. CONDITION OF OPERATIONS. The holder shall maintain the authorized improvements and permit area to standards of repair, orderliness, neatness, sanitation, and safety acceptable to the authorized officer and consistent with other provisions of this permit. Standards are subject to periodic change by the authorized officer when deemed necessary to meet statutory, regulatory, or policy requirements or to protect national forest resources. The holder shall comply with inspection requirements deemed appropriate by the authorized officer.

C. OPERATING PLAN. The holder shall prepare and annually revise by an operating plan. The operating plan shall be prepared in consultation with the authorized officer or the authorized officer's designated representative and shall cover all operations authorized by this permit. The operating plan shall outline steps the holder will take to protect public health and safety and the environment and shall include sufficient detail and standards to enable the Forest Service to monitor the holder's operations for compliance with the terms and conditions of this permit. The operating plan shall be submitted by the holder and approved by the authorized officer or the authorized officer's designated representative prior to commencement of operations and shall be attached to this permit as Appendix B. The authorized officer may require an annual meeting with the holder to discuss the terms and conditions of the permit or operating plan, annual use reports, or other concerns either party may have.

D. **INSPECTION BY THE FOREST SERVICE**. The Forest Service shall monitor the holder's operations and reserves the right to inspect the permit area and transmission facilities at any time for compliance with the terms of this permit. The holder's obligations under this permit are not contingent upon any duty of the Forest Service to inspect the permit area or transmission facilities. A failure by the Forest Service or other governmental officials to inspect is not a justification for noncompliance with any of the terms and conditions of this permit.

IV. RIGHTS AND LIABILITIES

A. LEGAL EFFECT OF THE PERMIT. This permit, which is revocable and terminable, is not a contract or a lease, but rather a federal license. The benefits and requirements conferred by this authorization are reviewable solely under the procedures set forth in 36 CFR Part 251, Subpart C, and 5 U.S.C. 704. This permit does not constitute a contract for

purposes of the Contract Disputes Act, 41 U.S.C. 601. The permit is not real property, does not convey any interest in real property, and may not be used as collateral for a loan.

B. VALID OUTSTANDING RIGHTS. This permit is subject to all valid outstanding rights. Valid outstanding rights include those derived under mining and mineral leasing laws of the United States. The United States is not liable to the holder for the exercise of any such right.

C. ABSENCE OF THIRD-PARTY BENEFICIARY RIGHTS. The parties to this permit do not intend to confer any rights on any third party as a beneficiary under this permit.

D. SERVICES NOT PROVIDED. This permit does not provide for the furnishing of road or trail maintenance, water, fire protection, search and rescue, or any other such service by a government agency, utility, association, or individual.

E. RISK OF LOSS. The holder assumes all risk of loss associated with use or occupancy of the permit area, including but not limited to theft, vandalism, fire and any fire-fighting activities (including prescribed burns), avalanches, rising waters, winds, falling limbs or trees, and other forces of nature. If authorized temporary improvements in the permit area are destroyed or substantially damaged, the authorized officer shall conduct an analysis to determine whether the improvements can be safely occupied in the future and whether rebuilding should be allowed. If rebuilding is not allowed, the permit shall terminate.

F. DAMAGE TO UNITED STATES PROPERTY. The holder has an affirmative duty to protect from damage the land, property, and other interests of the United States. Damage includes but is not limited to fire suppression costs, damage to government-owned improvements covered by this permit, and all costs and damages associated with or resulting from the release or threatened release of a hazardous material occurring during or as a result of activities of the holder or the holder's heirs, assigns, agents, employees, contractors, or lessees on, or related to, the lands, property, and other interests covered by this permit. For purposes of clause IV.F and section V, "hazardous material" shall mean (a) any hazardous substance under section 101(14) of the Comprehensive Environmental Response, Compensation, and Liability Act (CERCLA), 42 U.S.C. § 9601(14); (b) any pollutant or contaminant under section 101(33) of CERCLA, 42 U.S.C. § 9601(33); (c) any petroleum product or its derivative, including fuel oil, and waste oils; and (d) any hazardous substance, extremely hazardous substance, toxic substance, hazardous waste, ignitable, reactive or corrosive materials, pollutant, contaminant, element, compound, mixture, solution or substance that may pose a present or potential hazard to human health or the environment under any applicable environmental laws.

1. The holder shall avoid damaging or contaminating the environment, including but not limited to the soil, vegetation (such as trees, shrubs, and grass), surface water, and groundwater, during the holder's use or occupancy of the permit area. If the environment or any government property covered by this permit becomes damaged during the holder's use or occupancy of the permit area, the holder shall immediately repair the damage or replace the damaged items to the satisfaction of the authorized officer and at no expense to the United States.

2. The holder shall be liable for all injury, loss, or damage, including fire suppression, prevention and control of the spread of invasive species, or other costs in connection with rehabilitation or restoration of natural resources associated with the use or occupancy authorized by this permit. Compensation shall include but not be limited to the value of resources damaged or destroyed, the costs of restoration, cleanup, or other mitigation, fire suppression or other types of abatement costs, and all administrative, legal (including attorney's fees), and other costs. Such costs may be deducted from a performance bond required under clause IV.I.

3. The holder shall be liable for damage caused by use of the holder or the holder's heirs, assigns, agents, employees, contractors, or lessees to all roads and trails of the United States to the same extent as provided under clause IV.F.1, except that liability shall not include reasonable and ordinary wear and tear

G. HEALTH, SAFETY, AND ENVIRONMENTAL PROTECTION. The holder shall promptly abate as completely as possible and in compliance with all applicable laws and regulations any activity or condition arising out of or relating to the authorized use or occupancy that causes or threatens to cause a hazard to public health or the safety of the holder's employees or agents or harm to the environment (including areas of vegetation or timber, fish or other wildlife populations, their habitats, or any other natural resources). The holder shall prevent impacts to the environment and cultural resources by implementing actions identified in the operating plan to prevent establishment and spread of invasive species. The holder shall immediately notify the authorized officer of all serious accidents that occur in connection with such activities. The responsibility to protect the health and safety of all persons affected by the use or occupancy authorized by this permit is solely that of the holder. The Forest Service has no duty under the terms of this permit to inspect the permit area or operations and activities of the holder for hazardous conditions or compliance with health and safety standards.

H. Subject only to the limits on the Lessee's liability under Title 24, Article 10, of the Colorado Governmental Immunity Act (CGIA), Colorado Revised Statutes (C.R.S.) §§ 24-10-101 through 24-10-119 (as amended), the holder shall indemnify, defend, and hold harmless the United States for any costs, damages, claims, liabilities, and judgments arising from past, present, and future acts or omissions of the holder in connection with the use and occupancy authorized by this permit. This indemnification and hold harmless provision includes but is not limited to acts and omissions of the holder or the holder's heirs, assigns, agents, employees, contractors, or lessees in connection with the use and occupancy authorized by this permit which result in (1) violations of any laws and regulations which are now or which may in the future become applicable, and including but not limited to those environmental laws listed in clause IV.F of this permit; (2) judgments, claims, demands, penalties, or fees assessed against the United States; (3) costs, expenses, and damages incurred by the United States; or (4) the release or threatened release of any solid waste, hazardous waste, hazardous substance, pollutant, contaminant, oil in any form, or petroleum product into the environment. This clause shall survive termination or revocation of this permit, regardless of cause.

I. Subject only to the limits on the holder's liability under Title 24, Article 10, of the CGIA, C.R.S. §§ 24-10-101 through 24-10-119 (as amended), the holder shall indemnify the United States for any damages arising out of the holder's use and occupancy authorized by this permit. The holder shall be liable for all injury, loss, or damage, including fire suppression, or other costs associated with rehabilitation or restoration of natural resources, associated with the holder's use and/or occupancy. Compensation shall include but is not limited to the value of resources damaged or destroyed, the costs of restoration, cleanup, or other mitigation, fire suppression or other types of abatement costs, and all administrative, legal (including attorney's fees), and other associated costs.

J. Clauses IV.H and IV.I shall not be interpreted to limit any of the holder's liability for, or prevent the United States from taking any action to address, injury, loss, damages, or costs associated with environmental contamination, injury to natural resources, or other cause of action that arises under other law, including the Resource Conservation and Recovery Act, as amended, 42 U.S.C. 6901 et seq., the Comprehensive Environmental Response, Compensation, and Liability Act, as amended, 42 U.S.C. 9601 et seq., and the Clean Water Act, as amended, 33 U.S.C. 1251 et seq., in connection with the holder's use and occupancy of Federal lands, or to diminish any independent obligation of the permittee to indemnify the United States with respect to the same.

K. The authorized officer has determined through a risk assessment that the potential liability of the United States for property damage and personal injury or death arising from the holder's use and occupancy authorized by this permit is $350,000 or less for an injury to one person in a single occurrence (per incident) or $990,000 or less for an injury to two or more persons in a single occurrence (in the aggregate). Pursuant to the CGIA, the holder shall provide self-insurance covering claims for personal injury or death up to $350,000 for an injury to one person in a single occurrence (per incident) or $990,000 for an injury to two or more persons in a single occurrence (in the aggregate) . The self-insurance documentation shall name the United States as a certificate holder. The coverage under the holder's self-insurance shall extend to property damage and personal injury or death arising from the holder's activities under the permit, including use and occupancy of National Forest System lands and the construction, maintenance, and operation of the structures, facilities, or equipment authorized by the permit.

1. If there is a conflict between this permit the certificate of insurance provided by the City of Boulder Risk Management ("the certificate"), and/or the City of Boulder Risk Management's insurance policy manuals ("insurance policy manuals"), the order of precedence among those documents shall be (1) this permit; (2) the certificate; and (3) the insurance policy manuals.

2. If a claim is submitted to the United States for property damage and personal injury or death arising from the holder's use or occupancy authorized by this permit, the Forest Service shall tender the defense of the claim to the respective representatives of the self-insurance. The holder understands that tort claims against the United States are governed by the Federal Tort Claims Act, which may result in the administrative denial of a claim. The holder further understands that in litigation the United States is represented by the United States Department of Justice (USDOJ) and agrees that representatives of the self-insurance will coordinate the defense with USDOJ, if a claim is litigated.

L. BONDING. The authorized officer may require the holder to furnish a surety bond or other security for any of the obligations imposed by the terms and conditions of this permit or any applicable law, regulation, or order.

V. RESOURCE PROTECTION

A. COMPLIANCE WITH ENVIRONMENTAL LAWS. The holder shall in connection with the use or occupancy authorized by this permit comply with all applicable federal, state, and local environmental laws and regulations, including but not limited to those established pursuant to the Resource Conservation and Recovery Act, as amended, 42 U.S.C. 6901 et seq., the Federal Water Pollution Control Act, as amended, 33 U.S.C. 1251 et seq., the Oil Pollution Act, as amended, 33 U.S.C. 2701 et seq., the Clean Air Act, as amended, 42 U.S.C. 7401 et seq., CERCLA, as amended, 42 U.S.C. 9601 et seq., the Toxic Substances Control Act, as amended, 15 U.S.C. 2601 et seq., the Federal Insecticide, Fungicide, and Rodenticide Act, as amended, 7 U.S.C. 136 et seq., and the Safe Drinking Water Act, as amended, 42 U.S.C. 300f et seq.

B. VANDALISM. The holder shall take reasonable measures to prevent and discourage vandalism and disorderly conduct and when necessary shall contact the appropriate law enforcement officer.

C. PESTICIDE USE. Pesticides may not be used outside of buildings to control undesirable woody and herbaceous vegetation (including aquatic plants), insects, rodents, fish, and other pests and weeds without prior written approval from the authorized officer. A request for approval of planned uses of pesticides shall be submitted annually by the holder on the due date established by the authorized officer. The report shall cover a 12-month period of planned use beginning 3 months after the reporting date. Information essential for review shall be provided in the form specified. Exceptions to this schedule may be allowed, subject to emergency request and approval, only when unexpected outbreaks of pests or weeds require control measures that were not anticipated at the time an annual report was submitted. Only those materials registered by the U.S. Environmental Protection Agency for the specific purpose planned shall be considered for use on National Forest System lands. Label instructions and all applicable laws and regulations shall be strictly followed in the application of pesticides and disposal of excess materials and containers.

D. ARCHAEOLOGICAL-PALEONTOLOGICAL DISCOVERIES. The holder shall immediately notify the authorized officer of all antiquities or other objects of historic or scientific interest, including but not limited to historic or prehistoric ruins, fossils, or artifacts discovered in connection with the use and occupancy authorized by this permit. The holder shall leave these discoveries intact and in place until directed otherwise by the authorized officer. Protective and mitigative measures specified by the authorized officer shall be the responsibility of the holder.

E. NATIVE AMERICAN GRAVES PROTECTION AND REPATRIATION. In accordance with 25 U.S.C. 3002(d) and 43 CFR 10.4, if the holder inadvertently discovers human remains, funerary objects, sacred objects, or objects of cultural patrimony on National Forest System lands, the holder shall immediately cease work in the area of the discovery and shall make a reasonable effort to protect and secure the items. The holder shall immediately notify the authorized officer by telephone of the discovery and shall follow up with written confirmation of the discovery. The activity that resulted in the inadvertent discovery may not resume until 30 days after the authorized officer certifies receipt of the written confirmation, if resumption of the activity is otherwise lawful, or at any time if a binding written agreement has been executed between the Forest Service and the affiliated Indian tribes that adopts a recovery plan for the human remains and objects.

F. PROTECTION OF HABITAT OF THREATENED, ENDANGERED, AND SENSITIVE SPECIES. The location of sites within the permit area needing special measures for protection of plants or animals listed as threatened or endangered under the Endangered Species Act (ESA) of 1973, 16 U.S.C. 1531 et seq., as amended, or identified as sensitive or otherwise requiring special protection by the Regional Forester under Forest Service Manual (FSM) 2670, pursuant to consultation conducted under section 7 of the ESA, may be shown on the ground or on a separate map. The map shall be attached to this permit as an appendix. The holder shall take any protective and mitigative measures specified by the authorized officer. If protective and mitigative measures prove inadequate, if other sites within the permit area containing threatened, endangered, or sensitive species or species otherwise requiring special protection are discovered, or if new species are listed as threatened or endangered under the ESA or identified as sensitive or otherwise requiring special protection by the Regional Forester under the FSM, the authorized officer may specify additional protective and mitigative measures. Discovery of these sites by the holder or the Forest Service shall be promptly reported to the other party.

G. CONSENT TO STORE HAZARDOUS MATERIALS. The holder shall not store any hazardous materials at the site without prior written approval from the authorized officer. This approval shall not be unreasonably withheld. If the authorized officer provides approval, this permit shall include, or in the case of approval provided after this permit is issued, shall be amended to include specific terms addressing the storage of hazardous materials, including the specific type of materials to be stored, the volume, the type of storage, and a spill plan. Such terms shall be proposed by the holder and are subject to approval by the authorized officer.

H. CLEANUP AND REMEDIATION

1. The holder shall immediately notify all appropriate response authorities, including the National Response Center and the authorized officer or the authorized officer's designated representative, of any oil discharge or of the release of a

hazardous material in the permit area in an amount greater than or equal to its reportable quantity, in accordance with 33 CFR Part 153, Subpart B, and 40 CFR Part 302. For the purposes of this requirement, "oil" is as defined by section 311(a)(1) of the Clean Water Act, 33 U.S.C. 1321(a)(1). The holder shall immediately notify the authorized officer or the authorized officer's designated representative of any release or threatened release of any hazardous material in or near the permit area which may be harmful to public health or welfare or which may adversely affect natural resources on federal lands.

2. Except with respect to any federally permitted release as that term is defined under Section 101(10) of CERCLA, 42 U.S.C. 9601(10), the holder shall clean up or otherwise remediate any release, threat of release, or discharge of hazardous materials that occurs either in the permit area or in connection with the holder's activities in the permit area, regardless of whether those activities are authorized under this permit. The holder shall perform cleanup or remediation immediately upon discovery of the release, threat of release, or discharge of hazardous materials. The holder shall perform the cleanup or remediation to the satisfaction of the authorized officer and at no expense to the United States. Upon revocation or termination of this permit, the holder shall deliver the site to the Forest Service free and clear of contamination.

I. CERTIFICATION UPON REVOCATION OR TERMINATION. If the holder uses or stores hazardous materials at the site, upon revocation or termination of this permit the holder shall provide the Forest Service with a report certified by a professional or professionals acceptable to the Forest Service that the permit area is uncontaminated by the presence of hazardous materials and that there has not been a release or discharge of hazardous materials upon the permit area, into surface water at or near the permit area, or into groundwater below the permit area during the term of the permit. This certification requirement may be waived by the authorized officer when the Forest Service determines that the risks posed by the hazardous material are minimal. If a release or discharge has occurred, the professional or professionals shall document and certify that the release or discharge has been fully remediated and that the permit area is in compliance with all federal, state, and local laws and regulations.

VI. LAND USE FEE AND ACCOUNTING ISSUES

A. LAND USE FEES. The holder shall pay an initial annual land use fee of $4,497.74 for the period from January 1, 2014 to December 31, 2014 , and thereafter on January 1, shall pay an annual land use fee of $4,497.74. The annual land use fee shall be adjusted annually using the applicable indexing factor.

B. MODIFICATION OF THE LAND USE FEE. The land use fee may be revised whenever necessary to reflect the market value of the authorized use or occupancy or when the fee system used to calculate the land use fee is modified or replaced.

C. FEE PAYMENT ISSUES.

1. Crediting of Payments. Payments shall be credited on the date received by the deposit facility, except that if a payment is received on a non-workday, the payment shall not be credited until the next workday.

2. Disputed Fees. Fees are due and payable by the due date. Disputed fees must be paid in full. Adjustments will be made if dictated by an administrative appeal decision, a court decision, or settlement terms.

3. Late Payments

(a) Interest. Pursuant to 31 U.S.C. 3717 et seq., interest shall be charged on any fee amount not paid within 30 days from the date it became due. The rate of interest assessed shall be the higher of the Prompt Payment Act rate or the rate of the current value of funds to the Treasury (i.e., the Treasury tax and loan account rate), as prescribed and published annually or quarterly by the Secretary of the Treasury in the Federal Register and the Treasury Fiscal Requirements Manual Bulletins. Interest on the principal shall accrue from the date the fee amount is due.

(b) Administrative Costs. If the account becomes delinquent, administrative costs to cover processing and handling the delinquency shall be assessed.

(c) Penalties. A penalty of 6% per annum shall be assessed on the total amount that is more than 90 days delinquent and shall accrue from the same date on which interest charges begin to accrue.

(d) Termination for Nonpayment. This permit shall terminate without the necessity of prior notice and opportunity to comply when any permit fee payment is 90 calendar days from the due date in arrears. The holder shall remain responsible for the delinquent fees.

4. Administrative Offset and Credit Reporting. Delinquent fees and other charges associated with the permit shall be subject to all rights and remedies afforded the United States pursuant to 31 U.S.C. 3711 et seq. and common law. Delinquencies are subject to any or all of the following:

(a) Administrative offset of payments due the holder from the Forest Service.

(b) If in excess of 60 days, referral to the Department of the Treasury for appropriate collection action as provided by 31 U.S.C. 3711(g)(1).

(c) Offset by the Secretary of the Treasury of any amount due the holder, as provided by 31 U.S.C. 3720 et seq.

(d) Disclosure to consumer or commercial credit reporting agencies.

VII. REVOCATION, SUSPENSION, AND TERMINATION

A. REVOCATION AND SUSPENSION. The authorized officer may revoke or suspend this permit in whole or in part:

1. For noncompliance with federal, state, or local law.

2. For noncompliance with the terms of this permit.

3. For abandonment or other failure of the holder to exercise the privileges granted.

4. With the consent of the holder.

5. For specific and compelling reasons in the public interest.

Prior to revocation or suspension, other than immediate suspension under clause VI.B, the authorized officer shall give the holder written notice of the grounds for revocation or suspension. In the case of revocation or suspension based on clause VII.A.1, 2, or 3, the authorized officer shall give the holder a reasonable time, typically not to exceed 90 days, to cure any noncompliance.

B. IMMEDIATE SUSPENSION. The authorized officer may immediately suspend this permit in whole or in part when necessary to protect public health or safety or the environment. The suspension decision shall be in writing. The holder may request an on-site review with the authorized officer's supervisor of the adverse conditions prompting the suspension. The authorized officer's supervisor shall grant this request within 48 hours. Following the on-site review, the authorized officer's supervisor shall promptly affirm, modify, or cancel the suspension.

C. APPEALS AND REMEDIES. Written decisions by the authorized officer relating to administration of this permit are subject to administrative appeal pursuant to 36 CFR Part 251, Subpart C, as amended. Revocation or suspension of this permit shall not give rise to any claim for damages by the holder against the Forest Service.

D. TERMINATION. This permit shall terminate when by its terms a fixed or agreed upon condition, event, or time occurs without any action by the authorized officer. Examples include but are not limited to expiration of the permit by its terms on a specified date and termination upon change of control of the business entity. Termination of this permit shall not require notice, a decision document, or any environmental analysis or other documentation. Termination of this permit is not subject to administrative appeal and shall not give rise to any claim for damages by the holder against the Forest Service.

E. RIGHTS AND RESPONSIBILITIES UPON REVOCATION OR TERMINATION WITHOUT RENEWAL. Upon revocation or termination of this permit without renewal of the authorized use, the holder shall remove all structures and improvements, except those owned by the United States, within a reasonable period prescribed by the authorized officer and shall restore the site to the satisfaction of the authorized officer. If the holder fails to remove all structures and improvements within the prescribed period, they shall become the property of the United States and may be sold, destroyed, or otherwise disposed of without any liability to the United States. However, the holder shall remain liable for all costs associated with their removal, including costs of sale and impoundment, cleanup, and restoration of the site.

VIII. MISCELLANEOUS PROVISIONS

A. MEMBERS OF CONGRESS. No member of or delegate to Congress or resident commissioner shall benefit from this

permit either directly or indirectly, except to the extent the authorized use provides a general benefit to a corporation.

B. CURRENT ADDRESSES. The holder and the Forest Service shall keep each other informed of current mailing addresses, including those necessary for billing and payment of land use fees.

C. SUPERSEDED PERMIT. This permit supersedes a special use permit issued to Public Service Company of Colorado, designated as BOU41111-16, dated August 14, 1980.

D. SUPERIOR CLAUSES. If there is a conflict between any of the preceding printed clauses and any of the following clauses, the preceding printed clauses shall control.

E. DAMAGE TO UNITED STATES PROPERTY. The holder/lessee has an affirmative duty to protect from damage the land, property, and other interests of the United States. Damage includes but is not limited to fire suppression costs, and all costs and damages associated with or resulting from the release or threatened release of a hazardous material occurring during or as a result of activities of the holder/lessee or the holder ′s/lessee ′s heirs, assigns, agents, employees, contractors, or lessees on, or related to, the lands, property, and other interests covered by this permit/lease. For purposes of clauses IV.G and section V, "hazardous material" shall mean (a) any hazardous substance under section 101(14) of the Comprehensive Environmental Response, Compensation, and Liability Act (CERCLA), 42 U.S.C. § 9601(14); (b) any pollutant or contaminant under section 101(33) of CERCLA, 42 U.S.C. § 9601(33); (c) any petroleum product or its derivative, including fuel oil, and waste oils; and (d) any hazardous substance, extremely hazardous substance, toxic substance, hazardous waste, ignitable, reactive or corrosive materials, pollutant, contaminant, element, compound, mixture, solution or substance that may pose a present or potential hazard to human health or the environment under any applicable environmental laws.

1. The holder/lessee shall avoid damaging or contaminating the environment, including but not limited to the soil, vegetation (such as trees, shrubs, and grass), surface water, and groundwater, during the holder ′s/lessee ′s use and occupancy of the permit/lease area. If the environment or any government property covered by this permit/lease becomes damaged during the holder ′s/lessee ′s use and occupancy of the permit/lease area, the holder/lessee shall immediately repair the damage or replace the damaged items to the satisfaction of the authorized officer and at no expense to the United States.

2. Subject only to the limits on the holder ′s/lessee ′s liability under the State Tort Claims Act, the holder/lessee shall be liable for all injury, loss, or damage, including fire suppression or other costs associated with rehabilitation or restoration of natural resources, associated with the holder's use and occupancy of the permit/lease area. Compensation shall include but is not limited to the value of resources damaged or destroyed, the costs of restoration, cleanup, or other mitigation, fire suppression or other types of abatement costs, and all associated administrative, legal (including attorney's fees), and other costs. Such costs may be deducted from a performance bond required under clause IV.L.

3. The holder/lessee shall be liable for damage caused by use of the holder/lessee or the holder ′s/lessee ′s heirs, assigns, agents, employees, contractors, or lessees to all roads and trails of the United States that are open to public use to the same extent as provided under clause IV.G.1, except that liability shall not include reasonable and ordinary wear and tear.

F. WATER FACILITIES AND WATER RIGHTS. This permit does not confer any water rights on the holder. Any necessary water rights must be acquired by the holder in accordance with State law. Any expenses for acquiring water rights shall be the responsibility of the holder. The United States reserves the right to place any conditions on installation, operation, maintenance, and removal of facilities to pump, divert, store, or convey water on National Forest System lands covered by this permit that are necessary to protect public property, public safety, and natural resources on National Forest System lands in compliance with applicable law. The holder waives any claims against the United States for compensation in connection with imposition of any conditions on installation, operation, maintenance, and removal of water facilities under this permit.

G. Signs (X29). Signs or advertising devices erected on National Forest System lands shall have prior approval by the Forest Service as to location, design, size, color, and message. Erected signs shall be maintained or renewed as necessary to neat and presentable standards, as determined by the Forest Service.

H. Improvement Relocation (X33). This authorization is granted with the express understanding that should future location of United States Government-owned improvements or road rights-of-way require the relocation of the holder's improvements, such relocation will be done by, and at the expense of, the holder within a reasonable time as specified by the authorized officer.

This permit is accepted subject to the conditions set out above.

CITY OF BOULDER

_____
City Manager

ATTEST:

_____
City Clerk

APPROVED AS TO FORM:

_____
City Attorney's Office

U. S. DEPARTMENT OF AGRICULTURE
Forest Service

By: _____
(Authorized Officer Signature)

Ron Archuleta, Acting Forest Supervisor
(Name and Title)

Date: _____

According to the Paperwork Reduction Act of 1995, an agency may not conduct or sponsor, and a person is not required to respond, to a collection of information unless it displays a valid OMB control number. The valid OMB control number for this information collection is 0596-0082. The time required to complete this information collection is estimated to average 1 hour per response, including the time for reviewing instructions, searching existing data sources, gathering and maintaining the data needed, and completing and reviewing the collection of information.

The U.S. Department of Agriculture (USDA) prohibits discrimination in all its programs and activities on the basis of race, color, national origin, age, disability, and, where applicable, sex, marital status, familial status, parental status, religion, sexual orientation, genetic information, political beliefs, reprisal, or because all or part of an individual's income is derived from any public assistance. (Not all prohibited bases apply to all programs.) Persons with disabilities who require alternative means for communication of program information (Braille, large print, audiotape, etc.) should contact USDA's TARGET Center at 202-720-2600 (voice and TDD).

To file a complaint of discrimination, write USDA, Director, Office of Civil Rights, 1400 Independence Avenue, SW, Washington, DC 20250-9410 or call toll free (866) 632-9992 (voice). TDD users can contact USDA through local relay or the Federal relay at (800) 877-8339 (TDD) or (866) 377-8642 (relay voice). USDA is an equal opportunity provider and employer.

The Privacy Act of 1974 (5 U.S.C. 552a) and the Freedom of Information Act (5 U.S.C. 552) govern the confidentiality to be provided for information received by the Forest Service.

This Page Intentionally Left Blank

Barker Gravity Pipeline

City of Boulder Raw Water Transmission Pipeline
Located in Boulder County Colorado
Entire pipeline located within T1S R72W and T1S R71W

Barker Gravity Pipeline
Access routes
Sheet Index
US Government Land

The information displayed on this map has been compiled from the most accurate source data available to the City of Boulder. However, this map is for reference purposes only and should not be construed as a legal document or survey instrument.

June 2014

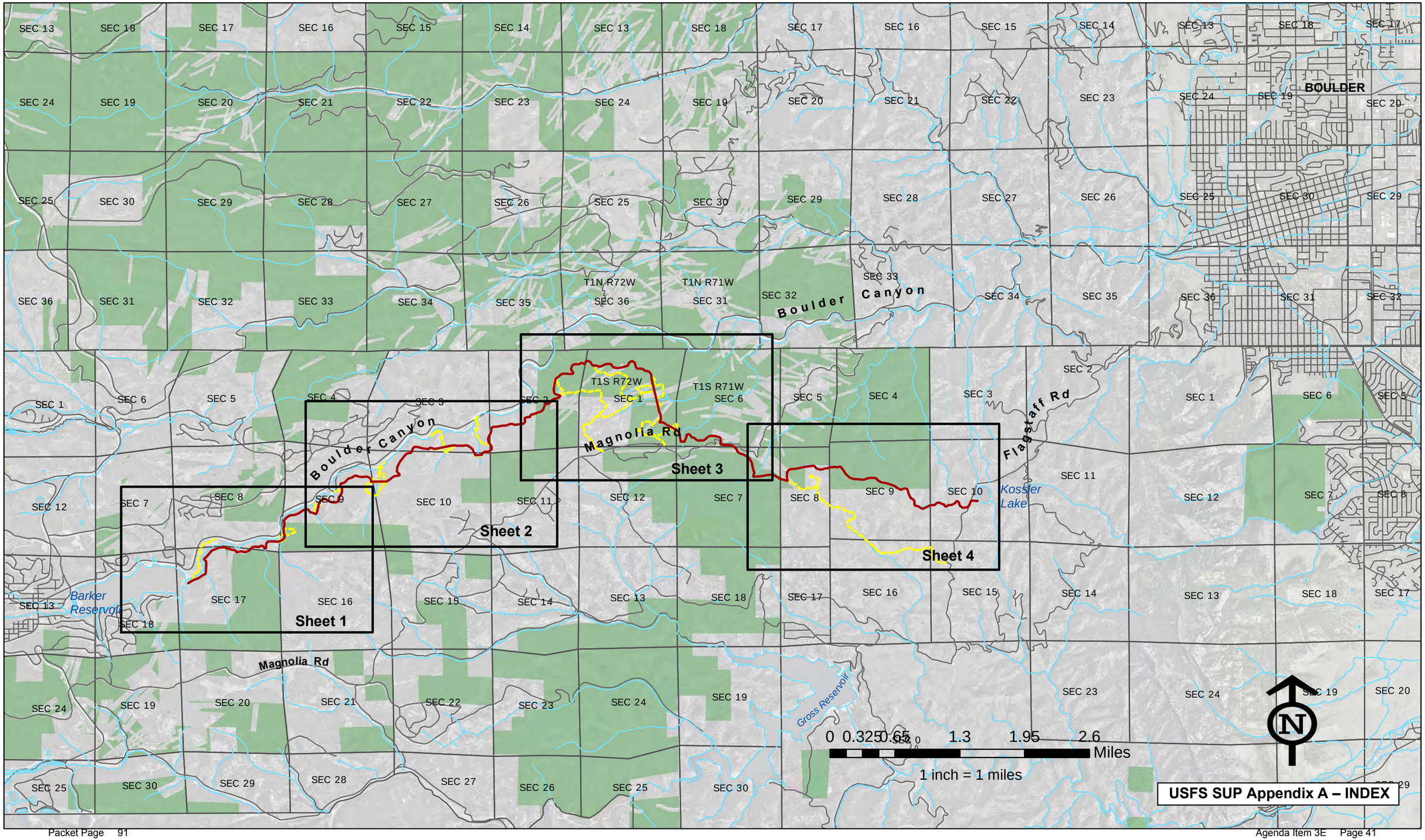

Barker Gravity Pipeline

City of Boulder Raw Water Transmission Pipeline
Located in Boulder County Colorado

- Manhole
- Siphon
- Tunnel
- Barker Gravity Pipeline
- Access Route - Vehicle
- Access Route - ATV/foot trail
- Ownership Parcel
- U S Government Land

The information displayed on this map has been compiled from the most accurate source data available to the City of Boulder. However, this map is for reference purposes only and should not be construed as a legal document or survey instrument.

June 2014

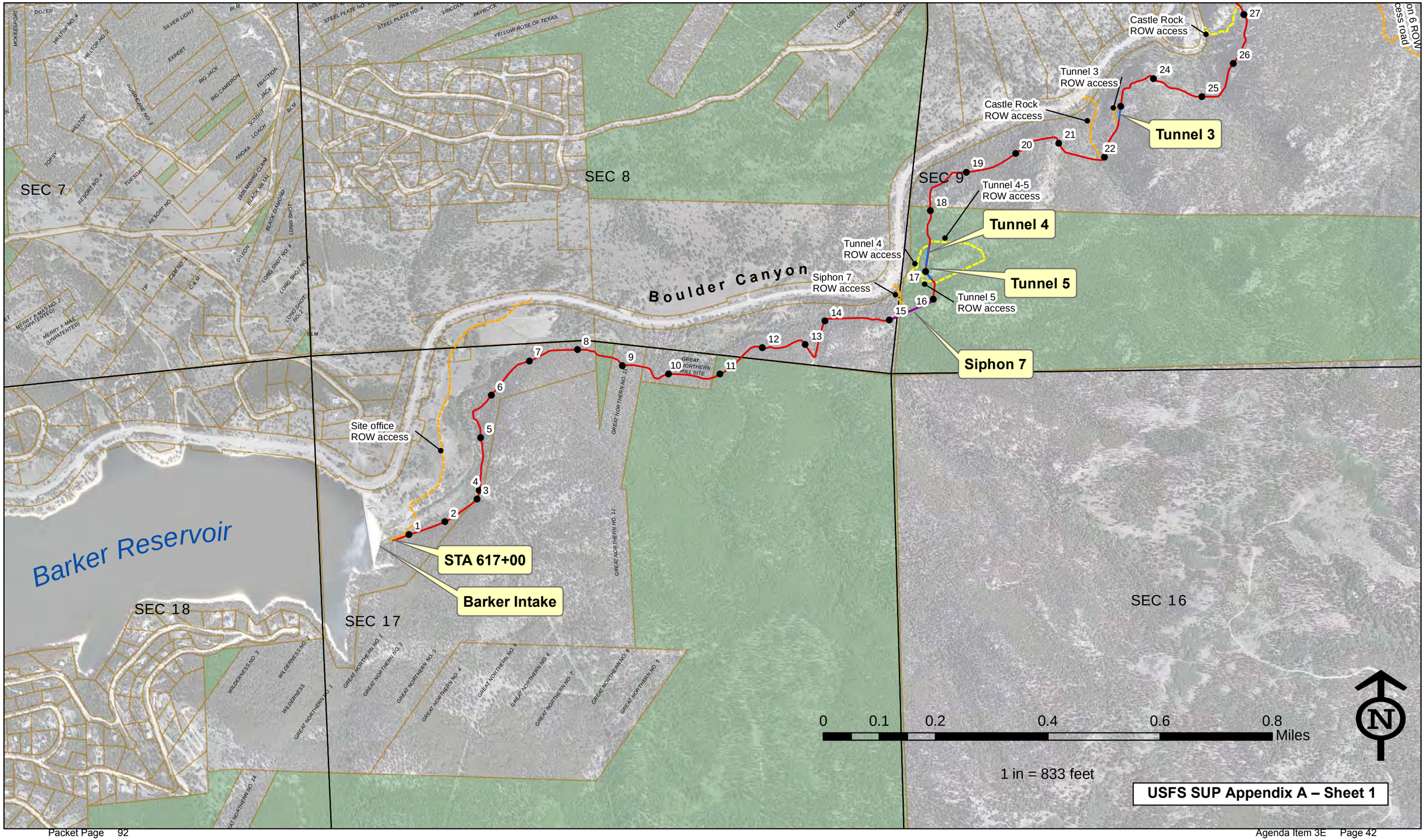

Barker Gravity Pipeline

City of Boulder Raw Water Transmission Pipeline
Located in Boulder County Colorado

- Manhole
- Siphon
- Tunnel
- Barker Gravity Pipeline
- Access Route - Vehicle
- Access Route - ATV/foot trail
- Ownership Parcel
- U S Government Land

The information displayed on this map has been compiled from the most accurate source data available to the City of Boulder. However, this map is for reference purposes only and should not be construed as a legal document or survey instrument.

June 2014

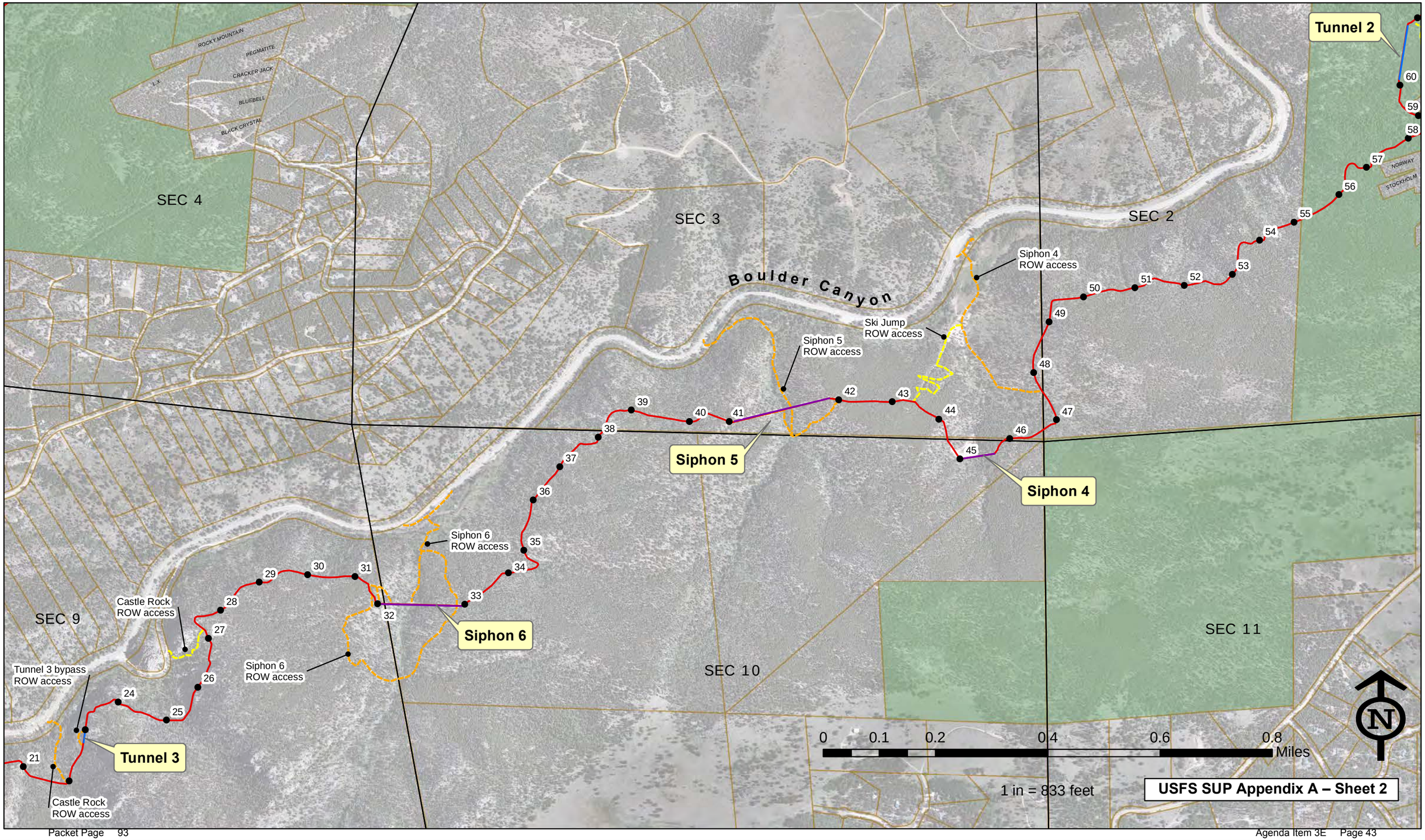

Barker Gravity Pipeline

City of Boulder Raw Water Transmission Pipeline
Located in Boulder County Colorado

- Manhole
- Siphon
- Tunnel
- Barker Gravity Pipeline
- Access Route - Vehicle
- Access Route - ATV/foot trail
- Ownership Parcel
- U S Government Land

The information displayed on this map has been compiled from the most accurate source data available to the City of Boulder. However, this map is for reference purposes only and should not be construed as a legal document or survey instrument.

June 2014

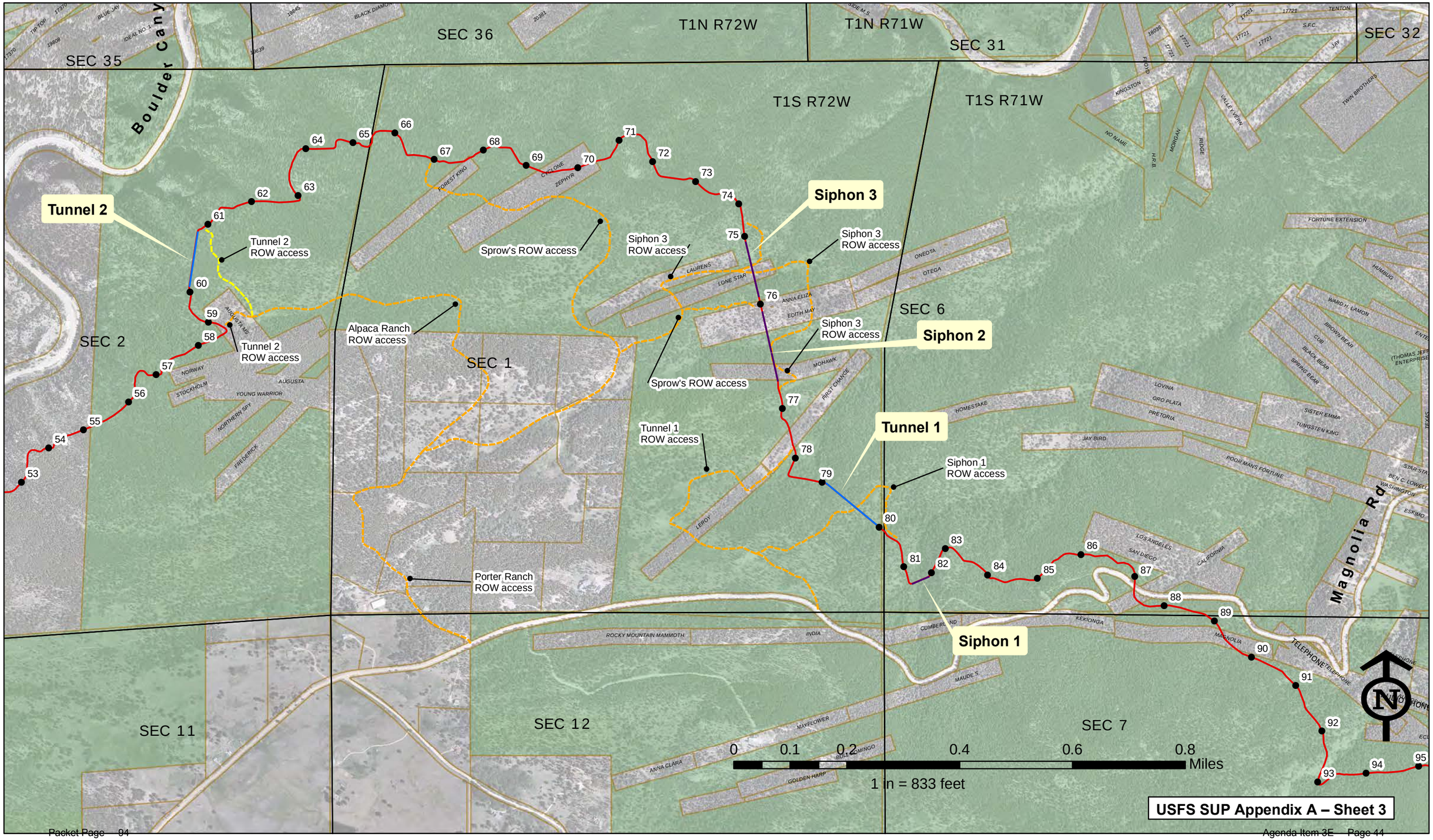

Barker Gravity Pipeline

City of Boulder Raw Water Transmission Pipeline
Located in Boulder County Colorado

- Manhole
- BCH Penstock
- Barker Gravity Pipeline
- Siphon
- Tunnel
- Access Route - Vehicle
- Access Route - ATV/foot trail
- Ownership Parcel
- U S Government Land

The information displayed on this map has been compiled from the most accurate source data available to the City of Boulder. However, this map is for reference purposes only and should not be construed as a legal document or survey instrument.

June 2014

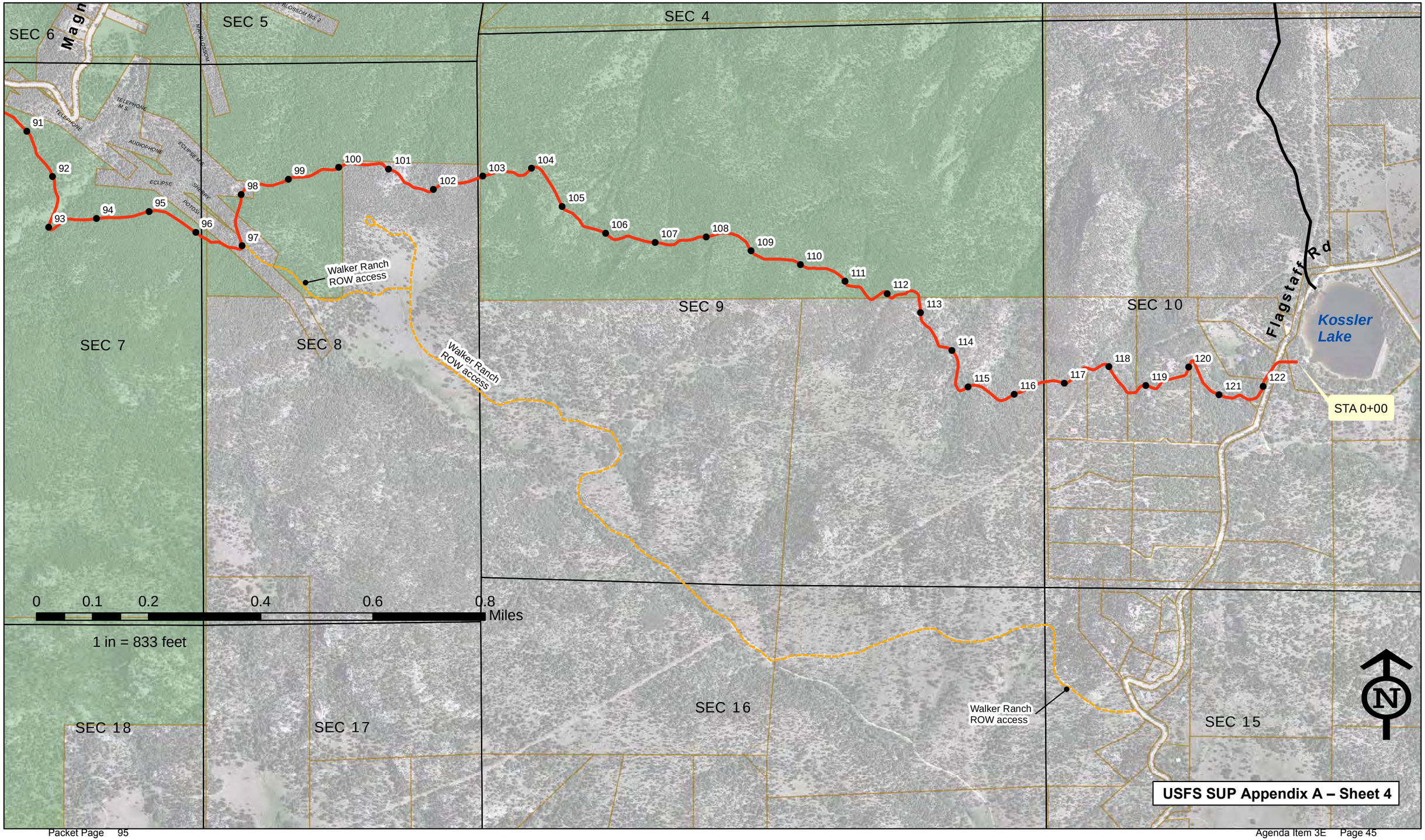

BARKER GRAVITY PIPELINE
OPERATING PLAN
July 2014

A. INTRODUCTION

The Barker Gravity Pipeline is a critical component of the city's water supply system that normally transports 30 to 35 percent of the city's annual water needs. At times the Barker system can supply 100 percent of the city's water supply, and there is no alternative means to transport this water to the Betasso Water Treatment Plant.

Portions of the Barker Gravity Pipeline occupy National Forest system land administered by the U.S. Forest Service Boulder Ranger District (USFS). The Barker Gravity Pipeline, as a component of the Boulder Canyon Hydroelectric Project, has been licensed by the Federal Energy Regulatory Commission (FERC) since the 1930s. In 2010, FERC approved surrender of the project license and approval of a conduit exemption from licensing for the project. With these changes, FERC will no longer have jurisdiction over certain project facilities, including the Barker Gravity Pipeline, and so the city has sought a separate USFS authorization for the pipeline to occupy federal land.

In recognition of the differing purposes of each agency, city and USFS staff have cooperated in the development of this operations plan to help efficiently achieve the combined goals for management of the facility.

B. BACKGROUND

The Barker Gravity Pipeline is a 36-inch diameter pipeline that transports raw water for delivery to the City of Boulder (city) Betasso Water Treatment Plant from Barker Meadow Reservoir near Nederland. A secondary purpose of the pipeline is to transport water to the Boulder Canyon Hydroelectric Plant for power generation prior to discharge into Middle Boulder Creek.

The gravity pipeline is 11.7 miles long and drops 300 feet in elevation as it runs from Barker Reservoir on Middle Boulder Creek to Kossler Reservoir. The pipeline alignment crosses very mountainous, remote, and adverse topography. Seven inverted siphons cross ravines that range from 65 to 200 feet deep. The pipeline corridor crosses land with a variety of ownerships, including the City of Boulder, Boulder County, USFS, and numerous private owners. The majority of the land crossed by the pipeline is owned by Boulder County.

The pipeline was constructed in 1909-1910 and much of the existing pipe dates to the original construction. The pipe is predominantly precast, reinforced concrete segments that vary in length from 2 feet up to 6 feet. The lower portions of the deepest inverted siphons are constructed of riveted steel pipe.

The pipeline runs at a relatively flat grade along a steep mountainside except where it traverses

deep drainages. It is installed in fill on steep slopes in many locations and sometimes is supported by constructed benches and retaining walls. The pipeline follows many of the curves along the mountainside through use of small deflections at many of the joints on the two foot long pipe segments. Some of the pipeline has a one foot deep earth cover, but much of the pipeline is still vulnerable to cracking from rockfall.

The pipeline has a rated capacity of 50 cubic feet per second (cfs) or 32 million gallons per day (mgd). The flow in the pipeline is driven by gravity. The flow regime varies from open channel to pressurized flow of up to 86 pounds per square inch (psi) with changes in the pipeline profile. Flow into the pipeline is controlled at a weir in the outlet structure at Barker Reservoir. The pipeline outlet at Kossler Reservoir is uncontrolled. The outlet is configured to prevent submergence except under extreme flood conditions.

Since it purchased the Boulder Canyon Hydroelectric Project in 2001, the city has concentrated its repair efforts on the most seriously deteriorated or damaged portions of the Barker Gravity Pipeline. The city prioritizes maintenance needs on an annual basis depending on extent of damage and available funding (see Attachment A, Barker Gravity Line Year 2013/2014 Plan for Maintenance), and repairs are usually made in late fall/early winter when reduced municipal water demand allows the pipeline to be taken out of service for repair. The city's overall goals for pipeline maintenance are to reduce system losses due to leakage and to maintain and improve reliability.

C. RESOURCE MANAGEMENT CONSIDERATIONS

The Barker Gravity Pipeline is located in a high alpine environment that might be easily damaged without careful consideration given to protection of the neighboring resources. Therefore, all monitoring and maintenance activity should be conducted in a manner that minimizes impacts to the surrounding environment to the extent practicable. Access to the pipeline corridor should be made only along the existing access roads and paths. Use of machinery should be limited to the smallest or least damaging equipment available that can accomplish the work. Use of a helicopter should be considered to bring in materials to pipeline segments in the most difficult terrain. Work should be scheduled to minimize effects to vegetation and wildlife. Any disruption to vegetation should be remediated following completion of work as soon as weather and conditions allow.

Specific guidelines for identified issues of concern are:

> Soils – The city should avoid soil disturbing activities during rainy periods or snowmelt except for emergency repairs.
>
> Invasive Weeds – Weed management should be an important component of any of the city's activities near the Barker Gravity Pipeline. On city-owned lands, Boulder County lands, and private land, the weed management plan that has been developed for the Caribou

Ranch area (Attachment B), including any updates that are developed, can serve as an appropriate guide. In April 2003, the USFS approved the Decision Notice and Finding of No Significant Impact for Noxious Weed Management on the Arapaho and Roosevelt National Forest and Pawnee National Grassland, including the revised Noxious Weed Management Plan and communication plan. The management options outlined in the April 2003 decision (Attachment C) should be followed for activities on National Forest lands.

Public Access – It is desired to limit public access along the pipeline corridor. The city will be responsible for monitoring the pipeline corridor for unauthorized use, and shall promptly report unauthorized use to the Boulder County Sheriff or to the USFS Boulder Ranger District, as appropriate. Installation of locks on any gates to be installed to limit public access to the pipeline corridor will be coordinated with USFS, Boulder County and private landowners as needed.

Maintenance of Pipeline Access Routes – Existing access roads are shown on the drawings contained in Attachment D to this plan. Access to the pipeline should be limited to existing access routes to the greatest extent possible. Access roads shall be maintained to prevent unnecessary erosion and resource damage. Blading or extensive maintenance of any routes located on National Forest lands should not occur without prior USFS approval.

Drain Valves – If operation of the drain valves on the pipeline causes erosion on National Forest lands, the city shall immediately report such damage to the Boulder Ranger District to allow the USFS to determine any necessary actions to remediate the erosion and to prevent future damage.

Fire Suppression – The city shall be responsible for costs incurred on NFS land as a result of fire suppression and fire rehabilitation in accordance with the special use authorization terms.

C. INSPECTIONS AND SCHEDULES

The following is intended to be a framework for inspections for the pipeline. Inspections of the pipeline and corridor may be conducted more frequently if needed.

Annual Inspections:

- The surface of the corridor will be inspected at least once a year to determine if there is any visible evidence of problems at the ground surface (e.g., leaks, erosion, landslides, unauthorized tampering with above-ground features, unauthorized access along the corridor). The pipeline easement will be accessed on foot, horseback, or with all-terrain-vehicles where the topography will allow ATV access without damaging vegetation or with a truck where the easement can be accessed using an existing access road. Access roads on NFS lands will need to be authorized.

- The Barker Gravity Pipeline inlet structure will be inspected and tested to assure proper performance.

Inspections Conducted at One- to Two-Year Intervals

- All drain valves will be exercised at one- to two-year intervals. Complete draining of the pipeline will not be necessary during the exercising, and the valves will merely be opened to confirm that it is operating properly. It is estimated that no more than 500 gallons of water will be released during these exercises. Drain valves will be accessed on foot, horseback, or with all-terrain-vehicles where the topography will allow ATV access without damaging vegetation or with a truck where vaults can be accessed using the existing historic access roads shown in Appendix E.

Internal Pipe Inspections

- At intervals set at the city's discretion, but not greater than every ten years, an internal inspection of the pipeline will be conducted. Each internal inspection will require that the pipeline be completely drained of water. The majority of water will be drained at Kossler Reservoir. However, some amount of water will remain in the pipeline between the natural topographic isolation points and this water will be drained through the intermediate drain valves along the pipeline. Once the pipe has been drained, the inspection will be either a visual inspection conducted by personnel in the pipe, a remote inspection conducted by closed circuit television camera, or a combination of the two methods. Manhole covers will need to be exposed to conduct this inspection, and ATV access to the manholes will be needed.

Changes to the Proposed Inspection Schedule

The proposed inspection schedule outlined above is based on general pipeline inspection practices and is subject to change if any of a variety of problem indicators is noticed at any time during the life of the project. Such indicators include, but are not limited to pipeline leaks, sloughing pipeline benches, water hammer incidents, broken valves, pipeline ruptures and/or catastrophic failure.

Table 1: Scheduled Inspection Summary

Type of Inspection	Frequency	Access
Annual	At least annually	Foot/horseback/ATV/truck
Drain valve exercise	1-2 year intervals	Foot/horseback/ATV/truck

Internal inspection	Not more than10 year intervals	Foot/horseback/ATV/truck

D. PIPELINE CORRIDOR AND ACCESS ROADS

The city owns a portion of the land beneath the Barker Gravity Pipeline. In addition, the city holds a deeded easement that allows any access necessary to maintain the pipeline across Boulder County lands located east of Barker Reservoir (deed from Platt Rogers, et al., dated June 14, 1908, recorded in Book 331, pages 446 and 447 of the Boulder County Clerk records). The pipeline right-of-way was first designated across federal lands as depicted on the map of the Denver-Eureka Power Company filed in the United States Land Office on June 30, 1903, and approved by the Department of Interior on February 25, 1904 (Attachment D). The FERC license exhibits (included as part of Attachment D) which originated from as-built pipeline and right-of-way drawings prepared by Public Service Company of Colorado in 1929, show a 60 foot wide pipeline right-of-way across federal lands. Some additional deeded easements for the pipeline corridor across private land exist, but use of other areas of the pipeline corridor and access are based on prescriptive easements.

Permanent access routes are shown in Attachment E. Access along the pipeline corridor will be needed from time to time for workers on foot, on horseback, all-terrain vehicle, pick-up truck, heavy equipment or helicopter depending on the nature of needed inspections or repairs and the degree of emergency represented by the situation. In all cases, the city will minimize environmental damage in accessing the pipeline while safely and effectively accomplishing the actions needed to ensure safe and reliable functioning of the Barker Gravity Pipeline. The city anticipates that all needed access, with the exception of heavy equipment that may be needed to repair major damage or failure, will be accomplished with little environmental disturbance.

The city will provide maintenance along access roads leading to the pipeline corridor only to the extent needed to keep the roads in a primitive state but useable for operation and maintenance of the pipeline and pipeline corridor. Examples of the type of maintenance that may be required include reconstruction of water-bars and other erosion control features, but only to the extent that degradation to such features are caused by city activities or as necessary for pipeline operation and maintenance. The city will not be required to maintain features of access roads necessary for or damaged by Boulder County or USFS activities, public use or road design.

It is unlikely that the city will clear the pipeline corridor of trees on a regular basis. However, an approximately 12- to 16-foot treeless corridor along the pipeline will be needed from time to time for scheduled and emergency repairs. The city may remove trees on an as-needed basis from this corridor to ensure access to the pipeline without conducting any tree replanting. If trees are removed from USFS lands, the city will obtain any needed authorization and make payment for removed timber in accordance with USFS standard procedures.

The city will inspect the existing barriers barring access to the pipeline corridor each year or as reports of unauthorized motorized vehicle use of the corridor are received. If significant

unauthorized vehicle use is occurring on Boulder County or National Forest lands within the corridor, the city shall promptly notify the USFS and/or Boulder County, as appropriate, to allow a determination of any additional measures that are needed to further limit unauthorized vehicle use. The city shall address all impacts to the corridor that are due to city use.

E. MAINTENANCE, REPAIRS AND RECONSTRUCTION

All pipeline and easement maintenance, repair and reconstruction strategies shall be developed on a site specific basis in accordance with current best engineering practices under the supervision of a licensed professional engineer. Current best engineering practices may or may not include original construction materials and methods. Additional considerations to be evaluated when planning maintenance, repair and reconstruction efforts shall include but are not limited to minimization of environmental effects, cost, and effect on overall, long term system reliability.

1. Maintenance and Repairs

Anticipated types of scheduled maintenance are as follows:

Table 2 – Maintenance Summary

Type of Maintenance or Repair	Frequency	Access	Anticipated Easement Disturbance	USFS Notification
Replacement of markers, vent risers and other minor appurtenances	Unknown-	ATV with trailer or pickup truck where access road allows	None for markers, vault exposure for vent repair	None
Valve repair	10-20 years	See above	Exposure of vault	None unless ground disturbance will occur
Pipe patching and retaining wall repair	5-10 years	Pickup truck or ATV	Minor temporary corridor disturbance, exposure of vaults	None
Replacement of damaged pipe sections	10-30 years	Pickup trucks, heavy equipment, helicopter	Corridor disturbance, exposure of air valve vaults and pipe at intervals along the pipeline	Yes – 90 day notification when on National Forest land
Slip lining	Possible in 10-20 years, then every 20-40	Pick-up trucks, heavy equipment,	Corridor disturbance, exposure of pipe and appurtenances at intervals along the pipeline.	Yes – 90 day notification when

Type of Maintenance or Repair	Frequency	Access	Anticipated Easement Disturbance	USFS Notification
	years	helicopter		National Forest land
Emergency repairs	Unknown	Variety of equipment depending on nature of problem	Corridor disturbance, exposure of pipeline or associated facilities	Yes – when National Forest land as soon as practicable

The city will prepare a Reclamation Plan prior to any scheduled maintenance that will result in significant corridor disturbance. Environmental damage resulting from scheduled maintenance will be repaired in a manner consistent with the plan.

If any of the individual actions or combination of actions noted in Table 2 has a cumulative annual disturbance of over 1000 lineal feet within the 60-foot-wide pipeline corridor across National Forest land, then the procedures identified below for major repairs and reconstruction will apply.

2. Major Repairs and Reconstruction

The city shall submit to the USFS drawings and specifications for future construction, reconstruction and repair of improvements on the easement area, as well as revisions of such drawings and specifications. A licensed engineer must prepare such drawings and specifications. Such drawings and specifications must be approved in writing by the USFS or a designated representative before the commencement of any work, which approval shall not be unreasonably withheld, except in the case of emergency repairs as described below. The city may be required to furnish as-built plans, maps, surveys, construction and restoration performance guarantees, or other similar information.

Review of plans by the USFS shall be completed within 90 working days of receipt from the city, and approval shall not be unreasonably refused. Under emergency repair situations, there may be exceptions to this process, but proper notification by the city to Forest Service and the intent of the coordination and cooperation of this paragraph apply.

It is important that city submittals contain sufficient information for the USFS to complete the review within the required timeframe. The submittal will be provided by the city to the USFS at an initial project management meeting for purposes of facilitating interaction and communication. The USFS will conduct an initial review of the city's submittal and advise the city within 15 days of any additional information that the USFS reasonably requires to complete its review within the required 90-day period. The city will provide any readily-available information meeting the USFS request within 10 days from receipt of the USFS request.

Information that requires extensive data compilation or generation of new data will be provided by the city to the USFS as soon as possible, but no more than 30 days from receipt of the USFS request, or the city will provide an explanation of why it is not possible to provide the information.

3. Alarm Response

Kossler Reservoir and the Barker Gravity Line are equipped with electronic instrumentation that is tied into the System Control and Data Acquisition system (SCADA) at Betasso Water Treatment Plant. This instrumentation is set to provide an alarm to alert city staff if conditions indicate that the Barker Gravity Pipeline might have ruptured.

Should an alarm occur that indicates the Barker Gravity may have a rupture, city personnel will then respond according to the City of Boulder Response Procedures for Raw Water Supply and Hydroelectric Alarms. Water Resources personnel will be notified of the alarm by the Treatment Operator. Water Resources personnel will first ensure that it is not a false alarm by evaluating immediately available information (cameras, instruments, etc.). If the alarm is confirmed, Water Resources staff will close the Farmers Gate at Barker Reservoir to stop inflow into the pipeline and will then inspect the pipeline corridor to ascertain any problems. Any problems that are noted on National Forest land or that may affect National Forest land will be reported to the USFS.
.

4. Emergency Repairs

If an emergency condition occurs that presents an immediate threat to property or persons, the city will proceed with emergency repairs immediately. If the repairs are major in nature or result in environmental damage to National Forest land, the city shall notify the USFS, as applicable, as soon as practicable and furnish plans, maps, surveys, or other similar information, upon completion of the emergency repairs. Following completion of emergency repairs, any areas disturbed as a result of pipeline malfunction, access and/or repair will be restored to an acceptable condition.

The city considers Barker Gravity Pipeline repairs to be emergencies whenever the pipeline condition represents an immediate threat to property or public safety and whenever loss of water delivery through the pipeline will result in water shortages within the municipal service area. Pipe ruptures, valve damage, evidence of significant lining damage, significant leakage and water hammer incidents are among the situations that would necessitate emergency repairs.

F. COMMUNICATIONS PROTOCOL

The city and the USFS will each designate an operating representative authorized to act on its behalf with respect to day to day matters arising under the operating plan. The operating

representatives will work together to interpret the operating plan, implement the terms of the operating plan and special use permit and resolve any differences that may arise in the course of business. Acceptance of such interpretations and implementation details will be documented from each operating representative prior to implementation of any change. Notice for pipeline maintenance activities shall be as described under the Section E titled Maintenance, Repairs and Reconstruction herein.

The initial operating representatives for each party are described and listed below. Each entity will promptly notify the other of any change in operating representative/contact person. The city's Water Resources Manager will have the primary responsibility for operation, maintenance and monitoring of the Barker Gravity Pipeline:

Joe Taddeucci, P.E.
City of Boulder
Dept. of Public Works, Utilities Div.
P.O. Box 791
Boulder, CO. 80306-0791
(303) 441-3266
taddeuccij@ci.boulder.co.us

The USFS contact for issues relating to the Barker Gravity Pipeline corridor is:

Mike Johnson
USFS Boulder Ranger District
2140 Yarmouth
Boulder, Colorado 80301
303-541-2534
mjohnson10@fs.fed.us

The general public can report any problems with the Barker Gravity Pipeline to Betasso Water Treatment Plant (303-441-3245) or by calling 911 in an emergency.

G. PLAN REVISIONS AND UPDATES

This plan will remain in effect, after approval by both parties, for a period of five years from the latest date below or until a new plan is approved. Subsequent plans will then be completed by the city at five year intervals and provided to the USFS for its review and concurrence. Revisions may be made at any point that the parties agree such action is warranted. A site visit by the parties to the agreement will be conducted before each 5-year revision of the plan to review how the plan is working and to discuss any needed revisions.

_____ _____
Forest Supervisor Date

_____ _____
City of Boulder Date

ATTACHMENTS:
A. Barker Gravity Line Year 2014/2015 Plan for Maintenance
B. Caribou Ranch Management Plan
C. ARP Noxious Weeds Management Plan
D. Historical Pipeline Right of Way Drawings
E. Pipeline Corridor Access

This Page Intentionally Left Blank

CITY
OF
BOULDER

Utilities Division
P.O. Box 791
1739 Broadway
Boulder CO 80306-0791
303-441-3266

MEMORANDUM

From: Kevin Clark, Source Water Engineering Project Manager
To: Mike Johnson, United States Forest Service
Date: July 3, 2014
Re: Barker Gravity Line Year 2014 / 2015 Plan for Maintenance

The following is a list of necessary maintenance projects on portions of Barker Gravity Line that are partially on or require access across U.S. Forest Service property presently scheduled by the city in 2014 and 2015. This work is a continuation of the ongoing annual maintenance work that the city has undertaken for purposes of stabilizing and repairing the one hundred year old pipeline each year since the city's purchase of the pipeline in 2001. Work has been prioritized based on the degree of concern regarding the condition of a particular section of the pipeline. Work activity schedules or locations may change due to ongoing infrastructure inspections, required emergency repair events, and or budget constraints. City staff will coordinate any updates to the work activity plan with the USFS team as soon as possible, as any required plan modifications arise. The City intends to notify the USFS with these two year look ahead work activity schedules every year. The city also intends to update the 10- Year Plan every 5 years in order to facilitate long range planning with the USFS team.

2014 Construction Season (Typically October to January for Pipe Shutdown):

Siphon No. 2 and Siphon No. 3 Manway Upgrades

Description

Siphons 2 and 3 are constructed of steel pipe with a small access point at the bottom of each siphon to allow for actuation of the siphon drain (i.e. buried valve with a stem extension). The manways at the bottom of the siphons will be upgraded to a larger size to allow access for maintenance and a clean out point for large material via an inspection flanged outlet. To install the larger, 8-foot diameter manways, approximately 12 feet of earth will be excavated around the pipe. Excavated material will be stockpiled at the bottom of the siphon, contained with a silt fence or other appropriate containment structure, and be was reused during backfill or re-graded into the existing slopes. The Siphon No. 2 Manway has previously been upgraded in 2012 with the Siphon No. 3 Manway upgrade remaining as well as final restoration of the disturbance areas in both locations. This work was not completed in 2013 and has been rescheduled for 2014. In addition Siphon No. 2 has recently developed a small leak and this will be repaired before final restoration efforts.

Access to Siphons 2 and 3 is from the access route off Magnolia Road through Porter Ranch subdivision **(refer to Barker Pipeline Maintenance Plan - Sheet 3)**. Equipment anticipated for

this project includes ATV's, 4x4 trucks, a tracked excavator, rubber tired loader, material transport trailers and a rubber tracked Challenger for deliveries in confined areas.

Siphon No. 3 – Staged Material for Manway Upgrade

Siphon No. 2 – Manway Upgrade Construction

Also on the prioritized repair list in 2014 is the leakage repairs to the most deteriorated locations in Siphon No. 1, Tunnel No. 1 and the adjacent pipeline segments. It is envisioned at this point in the pipeline rehabilitation work plan to only patch the most severe leakage areas and joints by using high strength water resistant cement grout. In the future, Siphon No. 1 will most likely require full rehabilitation / replacement along with a new manway, manway vault and outlet drain assembly due to ongoing performance issues with the original pipe (i.e. circa 1905) and drain outlet pipe system.

Siphon No. 1 and ROW

Tunnel No. 1 Upstream Adit

Access will be via the Siphon No. 1 and Tunnel No. 1 construction access roads on USFS and private land which branches off Magnolia Road (refer to Barker Gravity Pipeline Maintenance Plan – Sheet 3). These access roads were used previously for the pipeline inspections and the annual Barker Gravity Pipeline ROW maintenance activities.

2015 Construction Season (Typically October to January for Pipe Shutdown):

Activities that are presently scheduled for 2015 which affect segments of the pipeline and access on USFS land include:

- Siphon No. 7 – Manway installation and leakage repairs
- Tunnel 4 and Tunnel 5 – Leak repair and pipeline refurbishment/replacement
- Pipeline rehabilitation/replacement "test section" within pipeline alignment from Barker Dam to Siphon No.7.

As a result of the planned 2015 activities; USFS lands will be affected at Siphon No. 7 and at Tunnel No. 4 /5 for construction access along the paths and roads as well as construction disturbance at the sections to be repaired (refer to Barker Gravity Pipeline Maintenance Plan – Sheet 1). City staff will provide more detail to USFS staff when work activities and schedules are confirmed well in advance of construction.

Siphon 7 Inspection Preparation

Tunnel No. 5 Downstream Adit

Tunnel No. 4 Upstream Adit

This Page Intentionally Left Blank

CARIBOU RANCH OPEN SPACE

MANAGEMENT PLAN

Boulder County Parks and Open Space Department

Approved by the Board of County Commissioners

October 15, 2002

TABLE OF CONTENTS

Page

LIST OF FIGURES iii

EXECUTIVE SUMMARY iv

SUMMARY OF RESOURCE EVALUATION 1

1.0 INTRODUCTION 1
1.1 General Description of Property 1
1.2 Physical Characteristics and Landscape Setting 1

2.0 VEGETATION RESOURCES 4
2.1 General Description 4
2.2 Significant Resources 5

3.0 WILDLIFE RESOURCES 7
3.1 General Description 7
3.2 Significant Resources 8

4.0 CULTURAL RESOURCES 14
4.1 General Description 14
4.2 Significant Resources 17

5.0 WATERSHED RESOURCES 18
5.1 General Description 18

MANAGEMENT PLAN 20

6.0 MANAGEMENT DIRECTION 20
6.1 Boulder County Comprehensive Plan 20
6.2 Terms of the Acquisition 24
6.3 Caribou Ranch Open Space Vision Statement 26
6.4 Caribou Ranch Open Space Management Goals and Objectives 26

7.0 VEGETATION RESOURCE MANAGEMENT 28
7.1 Protecting Significant Resources 28
7.2 Forest Management 29
7.3 Grassland Management 31
7.4 Weed Management 32

8.0 WILDLIFE RESOURCE MANAGEMENT 32
8.1 Protecting Significant Resources 33

9.0 CULTURAL RESOURCE MANAGEMENT 34

9.1 Protecting Significant Resources 35

10.0 VISITOR SERVICES 36
10.1 Management Areas 38
10.2 Recreation Facilities 41
10.3 Interpretation 44
10.4 Fencing 44
10.5 General Regulations 45
10.6 Parks and Open Space Department 45
10.7 Patrol 46
10.8 Emergency Services 47
10.9 Volunteer Opportunities 47

11.0 RESOURCE MONITORING 48

APPENDIX 1: CARIBOU RANCH OPEN SPACE MANAGEMENT TEAM 51

APPENDIX 2: CONSULTANTS AND ADVISORS 52

LIST OF FIGURES

Page

Figure 1 Location 2

Figure 2 Significant Plant Communities 6

Figure 3 Elk Concentration Areas and Movement Corridors 9

Figure 4 Special Avian Habitat 12

Figure 5 Early Land Patents 16

Figure 6 Management Areas 39

Figure 7 Trailhead and Trail Plan 42

EXECUTIVE SUMMARY

Caribou Ranch Open Space is 2,180 acres of land located 1.5 miles north of the Town of Nederland. The protection of this property provides for the conservation of significant wildlife habitat, plant communities, historical resources, watershed values, and scenic quality. Caribou Ranch Open Space is a montane parkland, a node of exceptional biodiversity and one of only a handful of these sites in western Boulder County that retains most of its ecological functions. The area can also provide outdoor recreational opportunities primarily through hiking, horseback riding, cross-country skiing, snowshoeing, fishing, wildlife viewing, and environmental education. Finding a balance between resource protection, land management, and human enjoyment of the property will be the key to the well being of the area.

The management plan presents the general direction for managing the property. Through goals, objectives, management tasks, and maps, the broad picture is presented. Not all the finer details have been worked out; more in-depth studies on such things as forest management prescriptions, restoration and interpretation of historical sites and buildings, trailhead location, and some trail alignments are needed. The management plan is dynamic and flexible, and can change as our knowledge of the property increases or as management situations change.

One the highlights of the experience for the visiting public will be viewing the historic sites found on the property from the mining and homesteading eras. The Switzerland Trail Railroad, Blue Bird Mine Complex, DeLonde Homestead, and the town site of Batesville will be managed to allow for public visitation. The Switzerland Trail Railroad will be the heart of the trail system, taking visitors to the historical sites.

Opportunities to view wildflowers, and wildlife and their telltale signs will also enrich the public's experience. Abundant bird life, butterflies, mammal tracks, and bugling elk may all be encountered. The fall elk rut that occurs on the property will be an interpretive opportunity.

We also have a goal of finding an appropriate trail alignment that provides a connection to trail opportunities north of Caribou Ranch Open Space. Planning and coordination with adjacent property owners is needed.

Protecting significant natural and cultural resources will occur through several management activities. Two conservation areas, which will be closed to the public, are designated. They act to protect important wildlife, plant and cultural resources, provide effective habitat for human sensitive species, and protect watershed quality by minimizing human contact with surface waters. There will be a spring closure (April 1 – June 30) of the property to minimize impacts to calving elk. Domestic dogs will not be permitted on the property to further protect wildlife and watershed values. As agreed to in the purchase agreement for the property, mountain biking will not be allowed.

The management plan also provides objectives and tasks for many other resource issues. Key locations in the forest will be managed to protect forest health and reduce wildfire hazard. Wildfires will be aggressively fought, and post-fire reclamation will be conducted to minimize impacts to surface waters. Noxious weeds will be controlled. The riparian area in DeLonde Meadow will be enhanced, while its hay meadows will continue to be cut, as they have been for over 100 years. The occurrences and populations of bats, birds, amphibians, and some mammals will be monitored.

SUMMARY OF RESOURCE EVALUATION

(For a more detailed assessment of the resources, including references and scientific names, see: "Draft Caribou Ranch Resource Evaluation" May 2002, Boulder County Parks and Open Space)

1.0 INTRODUCTION

Caribou Ranch has a long history of being a special place in western Boulder County. Its geographic setting has made it a high quality node of biodiversity. The great variety of vegetation types – from montane woodland to subalpine forest, from dry meadow to beaver pond wetland – provide habitat for a significantly large number of species. Native people of the Front Range seasonally resided on the property and found abundant game, water and plant resources, as well as sites that had spiritual meaning. Early homesteaders and ranchers were drawn to the presence of timber, water and grass. Miners found silver and gold, and developed mills for processing. Railroad moguls found a path to link Boulder with the mining districts of the county. The movie industry found the right scenery to shoot a movie set in the "old west" with the making of the 1966 version of "stagecoach." Rock and roll stars of the 1970s found a place that provided solitude and inspired creativity. All this, and much more, is a part of this rich location.

We wish to thank Jim Guercio and family for taking the land saving actions, which protect Caribou Ranch Open Space for the enjoyment of current and future citizens of the county. We thank the citizens of Boulder County and the City of Boulder for providing the financial means to protect this property. We also wish to thank Great Outdoors Colorado for providing a grant that helped fund the Resource Evaluation.

1.1 General Description of the Property

Caribou Ranch Open Space is located in western Boulder County, Colorado, 1 mile north of the Town of Nederland, 4 miles south of the Town of Ward and 13 miles west of the City of Boulder (Figure 1). Additionally, the property is 1.5 miles west of the Peak-to-Peak Scenic Byway, primarily south of the Rainbow Lakes Road (County Road 116), north of Sherwood Gulch Road (County Road 126) and 1 mile east of the old Caribou Townsite and Caribou Park.

The property was acquired from James Guercio beginning in December of 1996 and completed through a second and revised acquisition in April of 2001. The lands acquired outright for open space purposes total 2180 acres. An additional 1489 acres are protected through a conservation easement and are owned by Mr. Guercio. Also acquired were water rights and all minerals owned by Mr. Gurecio under the open space.

At the time the County was negotiating for the land, the City of Boulder Utilities Department had been negotiating with Mr. Guercio for an easement where the Silver Lake Pipeline crosses the property and to further protect the City's watershed. Cooperative negotiations between the three parties resulted in the outright purchase of 2180 acres by the City of Boulder at a price of $4,000 per acre. The County has options to buy out the fee interest (excluding the pipeline right-of-way) from the City through the year 2006.

1.2 Physical Characteristics and Landscape Setting

The property lies within the montane and subalpine lifezones of the east flank of the Front Range of the Southern Rocky Mountains. Elevation ranges from approximately 8,310',

Figure 1 - Location

where DeLonde and North Boulder creeks leave the property, to 10,130' at the southwest corner.

Changes in elevation have been influenced by the rise of the Rocky Mountains, glaciers and streams. The property is most level on its east and southeast side, an area that abuts land that was the terminus to Pleistocene glaciers. At this point, the glaciers created a flat and broad park. The majority of this park is retained by Mr. Guercio as the Caribou Ranch Homestead. Grade gradually increases moving east to west. The increase is first gradual being influenced by glacial till. The southern part of the western portion of the property then sees a dramatic increase in elevation as granite is encountered. This area is heavily influenced by stream cutting action from DeLonde Creek. The landscape is very linear and V-shaped. The western part of the northern portion of the property encounters less severe grade increases, though still a general increase, as the parent material is glacial in origin. Here the landscape is influenced by North Boulder Creek: the landscape changes pattern as the stream curves through the glacial till and the topography is mixed with flat areas and steep grades. Some of the flat areas are where glacial kettle ponds are found. Mixed within are other features including flat areas of deposited sediment, such as where DeLonde Creek exits its steep valley.

Soils in the area are heavily influenced by geology and slope. On metamorphic and igneous rocks, soils are comprised of weathered residuum and are either stony or rubbly. Soils on glacial material are comprised of glacial till and are bouldery. Floodplain deposits are comprised of alluvium or glacial till. Soils are better developed on flat or slightly sloped surfaces such as floodplains and plateaus. Soils influence vegetation: areas with fine-grained soils, such as alluvium, favor grasslands and wetlands, while coarser soils favor forests.

The surface and subsurface waters of the property are within the Boulder Creek Basin. North Boulder Creek, a tributary of Boulder Creek, flows through Caribou Ranch Open Space; in terms of flow it is the most significant conveyor of surface water on the property. The creek originates approximately 5 miles west along the Continental Divide in the City of Boulder's Silver Lake Watershed. Several tributaries of North Boulder Creek flow through the property: Caribou Creek, DeLonde Creek and Little Como Creek. Almost the entire drainage basin of DeLonde Creek is contained in the open space.

The City of Boulder's Silver Lake Watershed is located northwest of Caribou Ranch Open Space. The watershed provides approximately 40% of the City of Boulder's annual municipal water supply and up to 90% of the City's winter water supply. Water is conveyed from the watershed via the Silver Lake Pipeline at a diversion structure located on North Boulder Creek approximately 1/3 mile north of Caribou Ranch Open Space. The pipeline then crosses Caribou Ranch Open Space and Caribou Ranch Homestead and terminates at Lakewood Reservoir, where the water is then transported via the Lakewood Pipeline to the Betasso Treatment Plant.

As with many locations in Boulder County the property is surrounded by a mosaic of public and private ownerships and a mixture of land uses including national forests, natural plant communities and wildlife habitat, ranching and grazing, rural residences, mining, recreation, watershed, and scientific research. Private land ownership predominates to the east and south. Roosevelt National Forest and City of Boulder Silver Lake Watershed are the dominant ownerships to the north and west. There is a greater amount of existing residential development and the potential for additional development to the east and south.

There are several ways to view the locational and landscape context of Caribou Ranch Open Space. First, the property lies within the upper portion of the montane lifezone and lower limits of the subalpine lifezone, broad landscape bands influenced by elevation and climate that

tend to run north and south. A unifying feature is the presence of North Boulder Creek, which flows west to east cutting across the lifezones; many of the major historic and current movements and flows followed this path, including water, glaciers, moraines, wildlife, and ancient peoples. The property is part of a montane parkland, one of only three in Boulder County that retains most of its original ecological character: these are broad, flat montane valleys containing major creeks whose alluvial soils favor grasslands and wetlands and whose glacial till (they were all terminal sites for Pleistocene glaciers) contains sizeable aquifers. Finally, the pattern of human influence follows a gradient that runs from southeast to northwest: the greatest degree of human presence in found in the Town of Nederland while the degree of human influence lessens moving northwest into the Indian Peaks Wilderness and the Silver Lake Watershed.

2.0 VEGETATION RESOURCES

2.1 General Description

The pattern of vegetation found on the property is influenced by elevation, slope, aspect, disturbance history, and soil type. The property is dominated by coniferous forest, particularly lodgepole pine. Ponderosa pine and ponderosa pine-Douglas-fir forests are present at lower elevations and drier sites, while Engelmann spruce-subalpine fir forests are present at more mesic sites at higher elevations and along riparian areas. Found in the alluvial floodplains along DeLonde and Como creeks are meadows, wetlands and riparian communities. DeLonde Creek contains two active beaver colonies whose dams, ponds and raised water table have resulted in the development of a willow carr. Located on steep south and southeast aspects are mixed-conifer woodlands dominated by ponderosa pine and Douglas-fir, mixed with sagebrush shrublands. Also present are small, scattered patches of aspen, several areas dominated by limber pine, and three kettle pond wetlands.

Processes of disturbance, particularly fire, have influenced the vegetation. Historic fire regimes varied with elevation, with the higher subalpine forests probably burning every 200+ years, while lower elevation montane forests and woodlands have a mean fire-return interval of 150 years. The non-Native American settlement period (1859 – 1910) saw an increase in fire in Boulder County; during this time much of Caribou Ranch Open Space burned from more human-caused fires and much of the current forest originates from that era. The montane woodlands and forests on the property saw major fires in 1654, 1706, and 1859. The ponderosa pine woodlands on Caribou Ranch Open space have been present in a rather stable form for several centuries: the oldest living tree was over 425 years old, and many other trees were over 200 years old. Hence, fires were generally not frequent disturbances in the area. The three widespread fire dates recorded at Caribou Ranch occurred during years when fire was recorded at many sites in the Front Range. Regional burning during these years emphasizes out the role of climate as a forcing of large-scale forest disturbances in this area, rather than the buildup of fuels. It is likely that fire behavior in the subalpine forests surrounding the more open woodlands was severe and resulted in extensive stand opening during these fire years, but that surface fires burned in the more open ponderosa pine communities. Future extensive fires in the Front Range forests will be driven primarily by regional climate variability.

Non-native plants are present on the property. The primary noxious weeds are ox-eye daisy, musk thistle, Canada thistle, yellow toadflax and mullein. Significant portions of the

meadow communities are dominated by timothy, Kentucky blue-grass, smooth brome, and orchard-grass, all of which were introduced in the early to mid 20th century as pasture grasses for cattle and horses.

2.2 Significant Resources

The quality and rarity of plants and plant communities were assessed against information from the Colorado Natural Heritage Program (CNHP) and the Boulder County Parks and Open Space Department's Environmental Resources Element of the Boulder County Comprehensive Plan. Key factors included CNHP ranking as well as status and distribution of the plant community in Boulder County.

One rare plant was located on the property. A population of wood lily was found. It is considered a rare plant in the state. This striking and brightly colored lily is found in riparian areas, wet meadows, and moist forests in Colorado. Because it is appealing to collectors and the quality of its associated riparian habitat continues to be threatened, it remains a plant species of special concern.

One plant community of significance was located on the property (Figure 2):

> Geyer willow-mountain willow/Canadian reedgrass Montane Willow Carr: This is a globally rare plant community located along DeLonde Creek. It is a deciduous shrubland that occurs in stands interspersed with wet meadows, open stream channels, and beaver ponds. The willow canopy is nearly a homogeneous mix of the two willow species. An active colony of beaver is present and is important to maintaining the plant community. The site is considered in only fair condition because of the heavy presence of hay grasses in all but the wettest parts of the willow carr, and an upstream water diversion to the adjacent meadow.

Several other sites warrant special attention as they contain elements of local interest, or elements of state interest but are of small size and/or fair to poor quality (Figure 2). These are:

> Kettle Ponds: Three small ponds are present in the northwest part of the property. It is probable that they are kettle ponds formed by glacial activity. They support typical montane wetland and mesic species such as beaked sedge, aquatic sedge and Canadian reedgrass. They are considered of local interest, as kettle ponds are not common on the Colorado Front Range.
>
> Wetland and Riparian Complex: This narrow drainage supports numerous small wetland and riparian plant communities. Common species include beaked sedge, aquatic sedge, Canadian reedgrass, and thin-leafed alder. Some small areas have floating mats of wetland vegetation. As the stream gradient decreases, subalpine fir and Engelmann spruce occur along the stream with abundant mesic forbs.
>
> Parry Oat-grass Meadow: Small patches of Parry oat-grass are found in this area. Parry oat-grass is of concern because its coverage has been greatly reduced due to land use practices of the late 19th and 20th centuries. Much of the vegetation of this area is currently comprised of nonnative grasses and portions are irrigated. This site may have

Figure 2 – Significant Plant Communities

historically been dominated by Parry oat-grass or a mix of mountain muhly and Parry oat-grass.

Big Sagebrush Shrubland: Big sagebrush shrublands, while dominant on Colorado=s western slope, are uncommon in Boulder county. It occurs at several locations on the property, these generally being southeast facing slopes. This location is considered the best of the sites.

Old-Growth Woodlands and Forests: These sites contain qualities of old-growth forests, including large-diameter trees, snags and deadfall. The largest and oldest trees are ponderosa pine and Douglas-fir. The oldest living tree found was over 425 years old, while others were over 200 years old. The stand canopies are open enough to allow for fires to run through the stands on the ground, hence many standing trees have had considerable longevity.

Ponderosa pine/Mountain Muhly Montane Forest: This slope contains small patches of this Colorado rare plant community. There is also some big sagebrush on the steep east facing slopes.

Ponderosa pine/Elk sedge Montane Woodland: This site is a complex mosaic of plant communities. Small patches of ponderosa pine/elk sedge montane forest, a Colorado rare plant community, are present. Small patches of big sagebrush are also found.

3.0 WILDLIFE RESOURCES

3.1 General Description

Caribou Ranch Open Space is part of a montane parkland, exceptionally rich sites for wildlife. The mixture of wetlands, meadows, streams, forests and woodlands provides good habitat diversity.

Approximately 50 species of mammal could call Caribou Ranch home. This represents about 50% of all mammal species found in the county. The most common mammal is probably the deer mouse, though it is seldom seen. Other common ground dwelling rodents include several chipmunk species (least and Uinta) and golden-mantled ground squirrel. Chickarees (sometimes called pine squirrels) are the most common squirrels. Nuttall=s cottontails and snowshoe hares are common. Mountain lion, black bear, bobcat, coyote, red fox and short-tailed weasel are regularly seen. The most common ungulates are elk and mule deer. A moose has been observed in recent years.

Eighty-eight potential breeding bird species were seen on the property. This is considered high species richness for a parcel this size in Colorado and represents 75% of the breeding species found in western Boulder County. The avian community is dominated by neo-tropical migrants that are insectivores or omnivores, feed in the foliage of trees or shrubs, gather their food by gleaning or foraging, and nest in a tree. Some of the more common species are generalists that can utilize the resources of several habitats. These species include broad-tailed hummingbird, dark-eyed junco, and American robin. Common forest dwellers include pine

siskin, yellow-rumped warbler, mountain chickadee, ruby-crowned kinglet, Steller=s jay, hermit thrush, and red crossbill. Species specific to aspen forests include warbling vireo, tree swallow, and red-naped sapsucker. The most common shrubland bird is green-tailed towhee. Riparian areas have a unique avian community dominated by neo-tropical migrants which include dusky flycatcher, Swainson=s thrush, yellow warbler, MacGillivray=s warbler, Wilson=s warbler, fox sparrow, song sparrow, and Lincoln=s sparrow. Bodies of water and beaver ponds are habitat for mallard, green-wing teal, and ring-necked duck. The most common grassland bird is vesper sparrow. Montane willow carrs and mixed-conifer woodlands proved to be the richest habitats for breeding birds. Meadow/forest edge and ponderosa pine forests have slightly lower richness and abundance values, while lodgepole pine, spruce-fir, and mixed conifer forests are lowest.

Other forms of animals are present. Striped chorus frogs and western terrestrial garter snakes were found on the property, and five other amphibians and reptiles are potentially found on the property. Rainbow and brook trout dominate the waters of North Boulder and Caribou Creeks. Invertebrates comprise the vast majority of animal species on Caribou Ranch Open Space, including all insects, butterflies, moths, mollusks, and crayfish.

Changes in animal communities since non-Native American settlement in Boulder County are many. Lost from the landscape on and around Caribou Ranch are bighorn sheep, gray wolf, grizzly bear, and river otter. Wolverine and lynx have not been confirmed in the county for a long time. Avian populations have seen community shifts toward those species that can take advantage of greater human influence. Mid-sized mammals such as the introduced house cat, domestic dog and fox squirrel, and some native animals such as raccoon, are increasing in number.

3.2 Significant Resources

Several significant wildlife resources warrant special attention. The significant resource areas are based both on specific sites important to individual species as well as high quality habitat types. Additionally, areas with a low level of human presence need recognition for their ability to provide effective habitat for large mammals such as elk and black bear, as well as nesting raptors. Following are descriptions of significant wildlife resource areas.

Mammals of Special Interest: Rocky Mountain Elk

Caribou Ranch is a high-intensity use area for elk (Meaney and Beane 1999). The herd of about 175 animals uses the ranch as transitional range in spring and fall (Figure 3). They generally arrive in April, coming from lower elevation winter range located east of the Peak-to-Peak Highway. They graze extensively in the meadows, riparian areas, and montane woodlands and shrublands found on the valley floor and open south-facing hillsides of the property. They will use denser forests for hiding and thermal cover. Females will then calve on-site and remain until some time in June or early July. In summer, the elk move to the high country to the north and west of the ranch, generally following the North Boulder Creek drainage. The majority of the herd is resident on the City of Boulder Watershed during the warm months, as well as in the Indian Peaks Wilderness west of Caribou Ranch. Some elk have been observed on the ranch throughout the summer. In fall the animals descend to the ranch, seemingly *en masse*, and likely stay as long as weather and snow permit. The herd conducts the rut on the ranch. With normal winter weather, the herd will cross the Peak-to-Peak Highway in late November or December, as

Figure 3 – Elk Concentration Areas and Movement Corridors

they descend to lower elevation. During mild winters, elk may remain on the ranch. Their winter range is dispersed over a broad area defined by Pennsylvania Gulch to the north, Sugarloaf and Comforter mountains to the east, and Ridge Road to the south. In April, the herd returns to Caribou Ranch.

Calving is an important biological function for elk. It is suspected that the majority of the cows in the herd calve on Caribou Ranch. The calving season along the Front Range of Colorado extends from late May until late June. Recent on-site observations revealed that calving areas are widely dispersed over the entire ranch and up into the City of Boulder Watershed.

The fall rut is also a significant biological time for elk. Large concentrations of elk gather on Caribou Ranch in the fall. Bulls at this time of year assemble harems of cows that remain on the property throughout most of the rut.

Caribou Ranch has functioned as a refuge for elk. Because of this, two management situations arise. First, it is probable that once opened to the public there will be a higher human presence on the property. While elk can be adaptable animals, they can also be wary of humans. Behavior is often shaped by several factors including whether or not they are hunted on portions of their range. This herd is hunted with the location depending on the timing of each season in relation to snow depth. Illegal hunting also occurs. Observations suggest that these elk are wary of people walking through a natural landscape; they will expend energy fleeing from people hiking. Consideration needs to be taken to minimize interaction, particularly during significant biological times such as calving and rutting.

Additionally, there has been a tendency for elk to utilize the property as a refuge during hunting season, possibly minimizing one form of population control. There is information that the herd has been increasing in size, but it is not evident that the herd size is exceeding the carrying capacity of the property. Monitoring of both herd population and impacts to vegetation are recommended. Active herd population management may be necessary if significant resource damage occurs.

Mammals of Special Interest: Townsend’s Big-eared Bat

A Townsend=s big-eared bat occurrence was documented at the Blue Bird Mine. Townsend=s big-eared bats are of statewide concern and are considered rare and imperiled by the Colorado Natural Heritage Program. They were previously considered candidates for federal listing. Statewide, they are considered imperiled throughout their range and found locally in restricted range. They are cave dwelling bats and are very sensitive to disturbance. Human disturbance, even unintentional, will force bats to leave caves or mines where such disturbance occurs. Access should be restricted into caves and mines where they roost. The bats will often range long distances to utilize forage and water sources.

Avian Habitat of Special Interest: Mixed-Conifer Woodlands

Mixed-conifer woodlands are rich avian habitats and have a high abundance of breeding birds. Additionally, four species of special interest are present: olive-sided flycatcher, pygmy nuthatch, MacGillivray=s warbler and western tanager. There are a number of species found primarily in this habitat on the property, including olive-sided flycatcher, western-wood pewee, mountain Blue Bird, Virginia=s warbler and western tanager.

Mixed-conifer woodlands occupy steep, south to southeast facing aspects on the property (Figure 4). Ponderosa pine and Douglas-fir are the dominant tree types. These sites have an open canopy, mixed with grasslands and stands of shrubs. Large-diameter trees, snags, and deadfall (over 20" diameter at breast height) are present, further increasing the structural diversity. Small patches of aspen are present in these sunny, open exposures. The open structure is favorable to understory shrubs, including big sagebrush, Rocky Mountain maple, and chokecherry. Small patches of denser mixed-conifer forest are present, particularly in ravines with east to northeast aspects.

The overall high structural diversity results in a habitat rich for breeding birds. The open canopy allows for the presence of aerial salliers, such as olive-sided flycatcher and western wood-pewee. Large-diameter trees result in the presence of many cavity-nesters and late-successional specialists, including pygmy nuthatch and northern saw-whet owl. Patches of understory shrubs create nesting sites for dusky flycatcher and MacGillivray=s warbler.

Mixed-conifer woodlands should be retained on the property. Structurally, the most important features appear to be an open canopy along with large-diameter trees, snags, and deadfall. These features should be retained.

Avian Habitat of Special Interest: Montane Willow Carrs

Along DeLonde Creek is found a montane willow carr. They are rich avian habitats and have a high abundance of breeding birds. Their density of breeding birds is considered the highest of any habitat in Boulder County. Additionally, four species of special interest are present: ring-necked duck, veery, MacGillivrays warbler, and fox sparrow. This habitat has the highest number of breeding species (21) which are restricted in breeding to a few types of habitat on the property, including mallard, green-winged teal, ring-necked duck, sora, killdeer, spotted sandpiper, belted kingfisher, northern rough-winged swallow, American dipper, veery, Swainson=s thrush, yellow warbler, Wilson=s warbler, fox sparrow, song sparrow, black-headed grosbeak, and red-winged blackbird.

Montane willow carrs are found where creeks flow through broad, flat floodplains. These sites are the most likely locations for long-term beaver habitation. Beavers dam the creek and raise the water table allowing for wetland vegetation to expand in coverage. The vegetation is dominated by tall, deciduous shrubs interspersed with wet meadows, open stream channels, and beaver ponds. Beaver activity is important in maintaining this plant community. The DeLonde willow carr is located along DeLonde Creek (Figure 4). Here, there is an active beaver colony.

The mixture of tall shrubs, wet meadows, stream channels, and beaver ponds provide good habitat diversity. Avian use is dominated by neo-tropical migrants, especially several types of warbler and sparrow, as well as dusky flycatcher, veery, Swainson=s thrush, and black-headed grosbeak, who nest and feed in the shrubs or on the ground below. The beaver ponds and adjacent patches of sedge-reedgrass meadows provide nesting habitat for waterfowl and sora. Swallows, who generally nest in adjacent forests, find rich food caches in the insects that breed on the ponds. Dippers and kingfishers nest in the streambank.

The importance of montane willow carrs make them significant habitat worthy of protection and special management. Retaining an adequate flow of water and an active colony of beaver are significant to these sites. Grazing and haying practices need careful management in order to minimize impacts to the vegetative structure and hydric soils. Expansion of the DeLonde willow carr may be possible and should be considered.

Figure 4 – Special Avian Habitats

DeLonde Willow Carr is the 5th largest montane willow carr in Boulder County, being fifteen acres in size. Its size and vegetative structural diversity, due to the presence of an active beaver colony, make it a designated Critical Wildlife Habitat in the Boulder County Comprehensive Plan.

Nearly 20% of montane and subalpine willow carrs in Boulder County have been lost to adverse land use practices, including conversion to pasture, filling for parking lots, roads and homes, peat mining, and inundation by reservoirs.

Avian Habitat of Special Interest: Important Habitat for Northern Goshawk

Northern goshawks are listed as a sensitive species by the Forest Service, watchlisted by the Colorado Natural Heritage Program, and considered restricted breeders by the Boulder County Nature Association. They were under consideration for Federal listing through the Endangered Species Act several years ago, but the available data were not conclusive enough to warrant such designation.

One goshawk nest was found on National Forest land within ¼ mile of the property in 1999, and reaffirmed in field work in 2000. Field work during 2002 did not find goshawks, but found nesting Cooper's hawks within 200 yards of where the goshawks had nested. The nest is within 100 yards of the Switzerland Trail Railroad grade. This site will be monitored in future years.

Northern goshawks have also been regularly observed in DeLonde Gulch. These observations include a post-fledging family group during the time period when they should be within the post-fledging family area (PFA). The post-fledging family area, which surrounds the nest area, is generally 400 acres in size. It is an area of concentrated use by the goshawk family where young are taught to hunt. The nest site and the PFA are used from March through the end of September. During this time there should be minimal human presence around the nest and within the PFA. A 2 mile buffer around the nest is generally recommended. A nest has not been located for these goshawks. But their regular presence in DeLonde Gulch provides the high probability of a nest in or near the gulch, and the area should be viewed as important habitat (Figure 4).

Fish of Special Interest: Greenback Cutthroat Trout

The greenback cutthroat trout was one of four native trout present in Colorado when European settlers arrived, and the only trout species present on Caribou Ranch. While over-harvest and habitat destruction took their toll on the greenback, the introduction of non-native trout species, such as rainbow, brook and brown, perhaps dealt the biggest blow. Greenbacks were thought to be extinct until two small populations were discovered; one of these was in Como Creek. Since then, there has been an active effort to recover greenbacks into locations where they historically thrived. Both the U.S. Fish and Wildlife Service and the Colorado Division of Wildlife list them as a threatened species. They were upgraded from endangered to threatened in 1978, and may soon reach a non-threatened status.

The Colorado Division of Wildlife introduced a population of Greenbacks into DeLonde Creek in the fall of 2001. This is viewed as an experimental population. It is not known if there is an effective block to the small numbers of brook trout found below the beaver ponds. Additionally, low winter water flows may present problems.

Habitat of Special Interest: Maintaining Effective Habitat

The potential use of Caribou Ranch Open Space for public access and recreation will generally present a level of human presence that is higher than recent historic use (past 30 years). It is difficult to predict how each animal and herd will react to recreational use. However, there are studies indicating some of the same wildlife species found on Caribou Ranch may avoid or underutilize areas near trails, roads, and/or human settlement. Recent studies assessing the impacts of non-motorized trail use upon wildlife have documented types of displacement, lower nesting success of avian habitat specialists, and greater rates of predation upon open-cup nesting birds. Trails appear to be another factor in the trend throughout much of Boulder County of increasing habitat generalists and decreasing habitat specialists.

The need for sizeable blocks of land with little human presence (sometimes referred to as "effective habitat") is becoming more important. As stated in the publication *Planning Trails with Wildlife in Mind*, "When possible, leave untouched large, undisturbed areas of wildlife habitat. They are an important – and rapidly vanishing – resource."

In the recently completed Forest Plan and Draft Environmental Impact Statement for the Arapaho and Roosevelt National Forests, the amount of habitat effectiveness was evaluated. The assessment estimated effective habitat based on distances from travelways (moderate to high use trails and roads). Their method of estimation is based on known disturbance distances for large mammals. For the montane lifezone in western Boulder County, effective habitat remains for only 47% of the public and private lands.

4.0 CULTURAL RESOURCES

4.1 General Description

This area has been utilized for thousands of years, although the prehistoric period is currently not as evident on the land as historic times. Prehistoric habitation and use of northeastern Colorado covers approximately 12,000 years, from the late Pleistocene epoch through historic contact. Evidence of occupations is nearly continuous throughout this 12,000-year span. The Paleo-Indian Stage (12,000 – 7,500 years before present) is characterized by a nomadic lifestyle and a hunting and gathering economy based upon the exploitation of large game animals that are mostly now extinct. The Archaic Stage (7,500 – 2,000 years before present) was characterized by a continental warming trend, an increased dependence on smaller mammals and wild plants, and the increased use of foothills and montane environments. The Ceramic State (2,000 – 400 years before present) is characterized by the introduction of ceramic technology, the replacement of the spear with the bow, and the advent of horticulture, though evidence of plant domestication in northeastern Colorado is scant. The Protohistoric/Contact Stage (400 – 150 years before present) was the beginning of direct and frequent contacts between Native Americans and people of European descent, and is characterized by accelerated mobility and conflict that followed the acquisition of horses and firearms.

How Caribou Ranch Open Space fit into the use pattern of prehistoric people is not clear. But the richness in game and plants seen today was no doubt even greater then. The presence of water, grasslands and forests provided a great abundance and diversity of resources. As

speculated by Dr. Ruben Mendoza and Dr. Charles Cambridge, who conducted a cultural resource inventory on the property:

> A In the early times, as Indian people journeyed by foot, the tribal culture becomes more concerned with obtaining resources for survival from the immediate area. As the natural richness of the area increases then tribal people would tend to remain in an area al long as possible. During this time, the totality of what we view as cultural institutions are stabilized in the Caribou area. Importantly, the tribal religion becomes tied to the land and the surrounding physical realities. Certain rock outcroppings are used for religious purposes of greeting the morning sun. Natural springs take on religious meanings since water comes from the earth. And, the riches of natural herbs of the area, enhances the religious healers in their quest to maintain the health of their people. These are the people that occupied the Caribou for the longest amount of time and without further research, these will be the people who will be the least understood."

Accelerated permanent settlement of Boulder County by non-Native Americans began in 1859 with the discovery of gold. The first major mining activity in the vicinity of Caribou Ranch occurred with the discovery of silver at Caribou located 1 mile west.

The open meadows and waterways of the park along North Boulder Creek (now Caribou Ranch) attracted homesteaders. Many French and Irish settled the area, including Joseph and Magloire DeLande, Thomas Langlais, Antonine Bosineau, Edward Barrigau, Autour Busemanx, and Andrew and Henry Como (Figure 5). The DeLandes are especially notable; DeLonde Creek is named after them, and "The Frenchman=s Ranch@ was historically a common locational indicator. Como Creek is named after the Como family, who homesteaded the northeast part of Caribou Ranch Homestead.

Mining and milling also occurred on the property. The Blue Bird Mine was established in 1871. The Sanata La Saria Mining Company of Colorado, A. L. Parsons, President, and D. Mortimore, Secretary developed it. It was primarily a silver mine. By 1881, a mill was developed at Blue Bird. Additionally, the North Boulder Mill was built in 1875 at ABatesville.@ The mill was built on the north bank of North Boulder Creek by L.M. Bates, with Martin A. Smith acquiring the mill lands at the same time.

The Denver, Boulder & Western Railroad Company built a narrow-gage railroad that served the Blue Bird Mine. It was better known as the "Switzerland Trail" railroad, and ran between 1904 and 1918. The railroad had significant financial problems, as the amounts of ore shipped from western Boulder County mines did not live up to hopes, and the tourist trade was too brisk to offset the costs of maintaining a mountain railroad through snowy winters. After a 1918 flood destroyed much of the trestlework, the railroad was closed and salvaged, and the right-of-way reverted to former owners of the land.

As early as 1906 the western lands of the North Boulder Creek Park, including the modern ranch complex site, were owned and occupied by Hector Urquhart. Under Urquhart the Como Ditches, dating from 1866 to 1875, were officially surveyed. Urquhart had a house and two outbuildings on the northeast side of Como Creek near the site of the modern ranch complex on Caribou Ranch Homestead (on lands retained by Jim Guercio).

In 1915 Thomas F. Tucker owned portions of the property. The Tucker Ranch formed the base from which arose the modern Caribou Ranch. The name ACaribou,@ as all uses of the word ACaribou@ in the region, comes from the naming of the Caribou Mine after the Cariboo (sic)

Figure 5 – Early Land Patents

Range of British Columbia. In Tucker=s time the ranch was named the Boulder County Ranch. The ranch was also known both as the Tucker Ranch and the Bar Rump Ranch, apparently Tucker=s brand. References to past tract owners were also associated with area properties; e.g., AFrenchman=s Ranch@ for the DeLonde place.

In 1936, Lynn W. Van Vleet purchased the Tucker Ranch, starting the ALazy VV@ Ranch, a.k.a. AVan Vleet Arabian Horse Ranch.@ Van Vleet=s income derived from ownership of the successful Trinidad Bean & Elevator Co. Van Vleet expanded the ranch through purchase of property from J. C. Clark and from the Vanadium Corporation, the successor of Primos Mining.

With Forest Service rangeland, the Van Vleet Ranch covered 13,000 acres. The ranch was focused around its Arabian horse stock, but also ranged 200 to 500 cattle. The Lazy VV employed about 30 people. The historic ranch complex served to support these people and the Arabian breeding operations. On Sundays during the summer, there was an Arabian horse show on the property that was open to the public. The Van Vleet Arabian Horse Ranch is featured in two films: Warner Brother=s AArabians of the Rockies@ (1946), and 20th Century Fox=s ASons of Courage@ (1947).

From the mid-1950s through 1970 Caribou Ranch went through several different owners. Several had plans for development. One corporation, which bought the property for $1 million in 1962, planned an 18-hole golf course, a ski area, and an Olympic swimming pool. Others planned resorts and condominium development.

James Guercio purchased the 2,600-acre property in 1971 from Kin-Ark Oil Co. of Tulsa and Transamerica Development Co. of Los Angeles. With Guercio the ranch again became known as Caribou Ranch. Guercio, a music producer, converted the barn into a recording studio, attracting many popular musicians of the day to the ranch.

> AA who=s-who of rock music=s elite passed through the gates of Caribou Ranch. In the free-spending mid->70s, before the recording industry faced the economic crunch, the rage among top stars was to hole up at Adestination studios@ in appealing locations. So such well-moneyed folks as Chicago, Rod Sterart, Waylon Jennings, Billy Joel, Carole King, Supertramp, War, Frank Zappa, Yes and Stephen Stills packed up their bags and headed for Caribou, the legendary recording complex five minutes outside of Nederland. The first record made there was Joe Walsh=s ARocky Mountain Way.@ Elton John recorded several classic albums, including the gratefully titled ACaribou.@ While in the area for the 1984 AVictory@ tour, Michael Jackson spent a few days hiding at Caribou, working on songs in the studio and horseback riding (the staff reported that he got along exceptionally well with the animals). Caribou finally shut down after a March 1985 fire destroyed the control room and caused about $3 million worth of damage.@ (Denver Post 1999)

4.2 Significant Resources

The property is rich in cultural resources. The majority of these is of an historic nature and associated with early settlement, ranching, mining, and transportation. Besides the major sites described below, there were 137 isolated finds on the property which included: 30

prehistoric stone tools and fire pits or lithic scatter; 40 historical fire pits and trash debris; 35 fences, farming and ranch activities; 14 historical construction and lumber activities; 13 mines, mining test pits and mining activities; and 5 stone markers. Following are descriptions of some of the more significant historic cultural resources.

The Denver, Boulder & Western Railroad (AThe Switzerland Trail@): The railroad grade is listed on the National Register of Historic Places as a Historic District. It serviced the Blue Bird Mine and associated mills, and was constructed in 1904. Additional sites were located during this survey that are contributing elements.

Blue Bird Mine Complex: This is a multi-component site that was a small company community that centered around the silver mine shafts. It consists of a bunkhouse, remains of a log building, a newer stone building, chicken coops, smoke house, the foundation of a mill, mine shafts, tracks for ore carts, and features related to The Switzerland Trail Railroad. The site appears eligible for National Register designation.

Batesville and North Boulder Mill: This is a multi-component site that includes prehistoric as well as historic significance. The historic component is Batesville, the site of the North Boulder Mill and its support community that operated primarily in the 1870s.

DeLonde Homestead: This site consists of the modified homestead that reflects several periods in the ranches development, crib-logged barn, foundations of former structures, and a variety of other contributing features. The Como Ditch #5 may also contribute. This site appears eligible for National Register designation.

Silver Lake Pipeline: The original pipeline, constructed in 1919, was an 18" clay tile conduit extending from Lakewood Reservoir westward across Caribou Ranch toward the City=s Watershed. This pipeline was replaced around 1947 with used 18" steel piping. In 1998, another pipeline replacement occurred.

Como Ditches #1, #2, #3, & #4: Como Ditches #1 and #2 were built in 1866. Como Ditch #3 was built in 1870, while Como Ditch #4 was built in 1875. In 1906 the combined ditches irrigated 448 acres of the Urquhart Ranch.

5.0 WATERSHED RESOURCES

5.1 General Description

The surface waters of Caribou Ranch Open Space are within the Boulder Creek Basin. North Boulder Creek, a tributary of Boulder Creek, flows through the property. In terms of flow it is the most significant conveyor of water on the property. The creek originates approximately 5 miles west along the Continental Divide in the City of Boulder’s Silver Lake Watershed. The watershed is approximately 12 square miles in area.

Several tributaries of North Boulder Creek flow through the property. Caribou Creek’s

waters originate on the flanks of Caribou and Bald mountains and flow through Caribou Park. Caribou Creek flows through the open space for approximately ½ mile before its confluence with North Boulder Creek. DeLonde Creek's waters originate on the east side of a ridge that separates Caribou Park from the open space property. DeLonde Creek runs due east for 2 ½ miles through the property and flows into North Boulder Creek just east of the open space boundary. Almost the entire drainage of DeLonde Creek is contained in the open space. A small drainage, locally called Little Como Creek, originates in a series of seeps and wetlands in the north central part of the property, and flows east into Como Creek. The entire drainage basin of North Boulder Creek west of Lakewood Reservoir, including DeLonde, Caribou and Como creeks, covers an area of 31 square miles.

The City of Boulder's Silver Lake Watershed is located northwest of Caribou Ranch Open Space. The Silver Lake Watershed provides approximately 40% of the City of Boulder's annual municipal water supply and up to 90% of the City's winter water supply. Most of this water flows through the Silver Lake Pipeline, which runs through Caribou Ranch Open Space. The pipeline is 27 inches in diameter and can carry 20 million gallons of water per day, which equates to 30 cubic feet per second (cfs). The City has retained ownership of the land traversed by the pipeline for 60' on either side of its centerline.

The City also has direct flow water rights allowing diversions from North Boulder Creek after the water runs over or through Caribou Ranch Open Space. Hence, water that flows off of the property into North Boulder, Caribou and DeLonde creeks can become part of the City of Boulder's drinking water. Direct flows from North Boulder Creek into Lakewood Reservoir vary in quantity depending on the hydrology of the year and the pattern of water rights called. Direct flow can occur throughout the year. Generally, from late September through early March the City can be diverting between 2 and 7 cfs, while in April and May this can increase to 30 cfs.

A reason for the City's involvement in the purchase and protection of the property is to help protect the quality of waters at their source to the greatest extent possible. Examples of threats can include erosion and sedimentation, human and animal waste, human and animal contact, mine tailing runoff, leaking septic systems, leaking underground storage tanks, or storm drainage. By helping to acquire this property and minimize development, several of the potential pollutants have been eliminated or greatly reduced. For those contaminants that can come from potential uses of the property, including erosion and sedimentation, human and animal waste, and human and animal contact, pollutants from these sources can add microbiological pathogens (bacteria, viruses, protozoans, and parasitic worms), total and dissolved suspended solids, and nutrients to the water supply and can cause a variety of health risks if not removed from the water before drinking. By reducing or preventing these contaminants from entering the water supply in the first place, treatment processes have a better chance of being effective and producing higher quality drinking water.

Pathogens are organisms that cause disease in other organisms. Bacteria, such as *E. coli*, are present in all surface waters because they can originate from fecal material of virtually any vertebrate. Bacteria can generally be treated with chlorine, but can interfere with the use of water for recreation. Viruses and protozoans are more problematic for treatment. They can originate from humans of from other vertebrates. It has been shown that they can pass through conventional treatment processes. *Giardia* and *Cryptosporidium* are the most widely recognized protozoans. It has been shown that many surface waters in the United States contain measurable amounts of these organisms, and outbreaks in the human population are well known. The two countermeasures include special treatment practices designed specifically to remove these

organisms, and protection of source water from contamination.

CARIBOU RANCH OPEN SPACE MANAGEMENT PLAN

This section of the plan describes the goals, policies, objectives, and activities that will be used to manage Caribou Ranch Open Space. The level of detail varies: the intent is to provide a broad overview of how the property will be managed. Finer details will evolve with further planning for some aspects of property management.

6.0 MANAGEMENT DIRECTION

6.1 Boulder County Comprehensive Plan

The *Boulder County Comprehensive Plan* provides direction for a comprehensive land management ethic. Through goals, policies, and mapped information, the plan gives guidance for future land use. The goals of particular relevance to Caribou Ranch Open Space deal with Environmental Management (goals that start with the letter B), Open Space (C), and Cultural Resources (K). They are:

B.1 Unique or distinctive natural features and systems and cultural features and sites should be conserved and preserved in recognition of the irreplaceable character of such resources and their importance to the quality of life in Boulder County. Other resources should be managed in a manner which is consistent with sound conservation practices, while enhancing compatibility between natural and man-made characteristics.

B.2 Air, water and noise pollution: inappropriate development in natural hazard areas; and overall environmental degradation should be reduced as much as possible or eliminated in order to prevent potential harm to life, health and property.

B.3 Critical wildlife habitats should be conserved and preserved in order to avoid the depletion of wildlife and to perpetuate and encourage a diversity of species in the County.

B.4 Significant natural communities (including significant riparian communities) and rare plant sites should be conserved and preserved to retain living examples of natural ecosystems, furnish a baseline of ecological processes and function, and enhance and maintain the biodiversity of the region.

B.5 Wetlands, which are important to maintaining the overall balance of ecological systems, should be conserved.

B.8 Environmental Conservation Areas (ECAs) should be conserved and preserved in order to perpetuate those species, biological communities, and ecological processes that function over large geographic areas and require a high degree of naturalness.

B.9 Riparian ecosystems, which are important plant communities, wildlife habitat and movement corridors, shall be protected.

C.1 Provision should be made for open space to meet human needs throughout the County in order to protect and enhance the quality of life and enjoyment of the environment.

C.3 Open space shall be used as a means of preserving the rural character of the unincorporated county and as a means of protecting from development those areas which have significant environmental, scenic or cultural value.

K.1 Every effort shall be made to identify and protect prehistoric and historic sites which meet national, state, or local criteria for historic designation from destruction or harmful alteration.

Open Space, within the context of the *Boulder County Comprehensive Plan*, is defined as:

> "Those lands referred to in the *Boulder County Comprehensive Plan*, as being intentionally left free from future development, and in which it has been determined that it is, or may in the future be, within the public interest to acquire an interest in order to assure their protection."

Passive Recreation, referred to in the Open Space Element policies, is defined as:

> "Outdoor activities that create opportunities for independence, closeness to nature, and a high degree of interaction with the natural environment and which require no organization, rules of play, facilities, or the installation of equipment, other than those which may be necessary to protect the natural environment."

In addition to being acquired Open Space, Caribou Ranch Open Space is influenced by several other Comprehensive Plan designations: the property is within the Indian Peaks Environmental Conservation Area; DeLonde Willow Carr is a Significant Wetland and Critical Wildlife Habitat; and North Boulder Creek is considered of Archaeological Significance and thought to be a travel route. The policies of most relevance to Caribou Ranch Open Space are from the plan elements of Open Space, Environmental Resources, and Cultural Resources.

Relevant Open Space policies are:

<u>Resource Management</u>

OS 2.01 The county shall identify and work to assure the preservation of Environmental Conservation Areas, critical wildlife habitats and corridors, Natural Areas, Natural Landmarks, significant areas identified in the Boulder Valley Natural Ecosystems Map, historic and archaeological sites, and significant agricultural land.

OS 2.02 Significant natural communities, rare plant sites, wetlands, and other important stands of vegetation, such as willow carrs, should be conserved and preserved.

OS 2.03 The county shall provide management plans and the means for the implementation of said plans for all open space areas that have been acquired by or dedicated to the county.

OS 2.03.01 The foremost management objectives of individual open space lands shall follow directly from the purposes for which the land was acquired.

OS 2.03.02 Management of county open space lands shall consider the regional context of ecosystems and adjacent land uses.

OS 2.03.03 Management of individual open space lands, including those under agricultural leases, shall follow good stewardship practices and other techniques that protect and preserve natural and cultural resources.

OS 2.04 The county, through its Parks and Open Space Department, shall provide appropriate educational services for the public which increase public awareness of the county's irreplaceable and renewable resources and the management techniques appropriate for their protection, preservation, and conservation.

OS 2.04.01 The Parks and Open Space Department shall cooperate with schools and non-profit organizations in the county to provide environmental education activities which increase awareness, understanding, appreciation, and support for stewardship of the natural and cultural resources on open space.

OS 2.04.02 The Parks and Open Space Department shall seek to meet the needs of diverse populations in the county by providing information and programming to accommodate special groups such as disabled persons, young people, senior citizens, and Spanish-speaking citizens.

OS 2.04.03 The Parks and Open Space Department shall develop and disseminate information through publications, exhibits, and other media on the uniqueness, importance, and appropriate stewardship and management of open space areas in the county.

OS 2.04.04 The Parks and Open Space Department shall utilize trained volunteers, cooperating groups, and private individuals to assist in the delivery of environmental education and interpretive services.

OS 2.05 The county, through its Weed Management Program, shall discourage the introduction of exotic or undesirable plants and shall work to eradicate existing infestations through the use of Integrated Weed Management throughout the county on private and public lands.

<u>Scenic Area and Open Corridor Protection</u>

OS 3.04 Areas that are considered as valuable scenic vistas and Natural Landmarks shall be preserved as much as possible in their natural state.

Recreational Use

OS 4.02 Except as the county may establish a regional park, such as the Boulder County Fairgrounds, or others similar facilities, the county will provide only a minimum level of maintenance or development on park land (consistent with policy OS 2.03).

OS 4.03 Recreational use of county open space land may be permitted where such use is consistent with the management plan for the property and does not adversely impact natural and cultural resources or other management objectives of the property.

- OS 4.03.01 Recreational use shall be passive, including but not limited to hiking, photography or nature studies, and, if specifically designated, bicycling, horseback riding, or fishing. Only limited development and maintenance of facilities will be provided.
- OS 4.03.02 Accessibility for special populations such as disabled persons, young people, senior citizens, and Spanish-speaking people shall be addressed on a system-wide basis.

OS 4.04 Requests for special uses or events on county open space shall be evaluated for their impacts to natural and cultural resources as well as other management objectives and maintenance considerations.

Trails

OS 6.01 Trails and trailheads shall be planned, designed, and constructed to avoid or minimize the degradation of natural and cultural resources, especially riparian areas and associated wildlife habitats.

OS 6.02 Adverse effects on private lands shall be minimized insofar as possible by trail and trailhead placement, posting of rules and signs against trespassing, installation of containing fences where critical, and any other appropriate measures.

OS 6.04 Trails shall provide for pedestrian, equestrian, bicycle, and/or other non-motorized uses, where each is warranted. Incompatible uses shall be appropriately separated.

OS 6.08 Trails constructed by the county Parks and Open Space Department shall be soft-surface except where necessary to prevent erosion and/or other resource damage.

Public Decision Making

OS 8.03 In developing management plans for open space areas, Parks and Open Space staff shall solicit public participation of interested individuals, community organizations, adjacent landowners and the parks and Open Space Advisory Committee, including public comment, and recommended for adoption after public hearing by the Board of County Commissioners.

OS 8.04 Significant changes to overall management direction or techniques shall

be presented to the Parks and Open Space Advisory Committee and/or the Board of County Commissioners, with opportunity for public comment before a decision is made.

Relevant Environmental Resource policies are:

ER 2.07 The County shall identify and work to assure the preservation of critical wildlife habitats, natural areas, historic and archaeological sites and significant agricultural land.

ER 4.09 The County will work towards protecting critical elk range and migration routes through reducing development potential and by working with landowners and management agencies to minimize human disturbance and provide seasonal habitat needs.

ER 6.01 The County will work with appropriate management agencies and property owners to protect or restore riparian areas.

ER 6.02 The County shall work toward minimizing human impacts to riparian ecosystems from development, roads and trails.

ER 6.03 The County will work with appropriate entities to ensure suitable minimum and maximum stream flows that maintain channel morphology, support hydrologically connected wetlands and perpetuate species, both plant and animal, dependent on riparian ecosystems.

ER 6.05 Management of riparian areas shall encourage use or mimicry of natural processes, maintenance or reintroduction of native species, restoration of degraded plant communities, elimination of undesirable exotic species, minimizing human impacts, and development of long-term ecological monitoring programs.

Relevant Cultural Resource policies are:

K1.02 Significant archaeological and historic sites and structures acquired by the County both in unincorporated and incorporated areas, shall be documented, protected, preserved, and where appropriate restored.

- K1.02.1 After acquisition, an inventory of cultural resources on the property shall be undertaken and the historic significance of 000each resource shall be determined.
- K1.02.2 Resources that meet the criteria for local landmark, or State or National Register status should be nominated for such status by the County.

6.2 Terms of the Acquisition

The primary purposes for acquiring Caribou Ranch Open Space were protection of the significant environmental and cultural resources. Appropriate public use was also a consideration. Public use is contemplated in the purchase agreement and was discussed at the acquisition public hearings.

Significant management considerations of the purchase agreements include:

- $ Public Use: Permitted uses of the open space are public trails perpetually limited to hiking, cross country skiing, snowshoeing, horseback riding and other pedestrian and equestrian activities. Trailhead parking cannot be located within 2 mile of the City of Boulder Watershed entrance road along Rainbow Lakes Road (CR 116). Mr. Guercio retains the right to name the public trails. Camping and campfires are prohibited.
- $ Roads: Vehicular access is limited to that necessary for City of Boulder activities associated with the Silver Lake Pipeline, open space management (including irrigation ditch operation and maintenance, field inventories and scientific study) and ranching. The County is prohibited from paving any of the existing roads or constructing new roads.
- $ Water: The water rights acquired consist of Como Ditch No.5; Caribou Springs No. 9 and 10; Caribou Ponds No. 4 and 6; and Natural Ponds No. 1, 2, and 5. In general, the water should first be applied to the open space for agricultural and environmental enhancement, and other related management purposes as determined by the County. Any excess water shall be abandoned to the stream and the City of Boulder may purchase and use it for its purposes. A priority use for the excess water is in-stream flow. Trail use (including equestrian use), vegetative management (including use of fire and herbicides) and agricultural management (including grazing) should not degrade the watershed nor water quality.
- $ Agricultural Use: The Guercios, so long as any of them owns the Caribou Ranch homestead, may lease back the property and water rights for agricultural purposes for up to 20 years (December 1996 to December 2016).
- $ Existing Buildings: County has the right to repair and reconstruct any existing structures and buildings for the purposes of use as caretaker, scientific research, and historic or administrative facilities. If the County chooses not to use the DeLonde Ranch House, Mr. Guercio can lease it.
- $ Additional Guercio Rights: The present and future owners and residents of the remaining Caribou Ranch property have direct access to the public trails by means of a private trail(s).
- $ Other Management Considerations: The County shall manage each parcel purchased from Mr. Guercio. The County will also manage that portion of the City of Boulder Watershed located south of the Rainbow Lakes Road (CR 116). The County is prohibited from building any structures or allowing any development, except that associated with trails and trailheads. The County shall not remove, destroy or cut any tree or plant, use any biocide or change the natural environment or habitat except as required for weed control, fire suppression or management, and trail development or maintenance. There is no dumping or storage of trash or chemicals; no changing of topography except for trail construction. The County shall not allow any fire to be set or any hunting or trapping or poisoning of wildlife without the written consent of the City of Boulder. The County agrees to make reasonable effort to suppress any wildfire that may occur.

6.3 Caribou Ranch Open Space Vision Statement

A vision statement captures the Afeel@ of the open space or what the open space would look like if the management plan were fully implemented.

> "Caribou Ranch Open Space will be a predominantly natural landscape consisting of a mosaic of forest types punctuated by streams, wetlands, riparian areas, shrublands, and meadows; inhabited by plant and animal species that are characteristic of the northern Front Range; functioning as a high-quality watershed; retaining elements of its cultural history; and with trails where citizens can hike, ride horses, cross-country ski or snowshoe in order to enjoy and learn about the natural and cultural resources."

6.4 Caribou Ranch Open Space Management Goals and Objectives

Goals are broad, general statements describing what the property should be in the future. They are more specific than a vision statement. Objectives are even more specific than goals. They are generally measurable, achievable, and relevant. Following are the goals and objectives of the Caribou Ranch Open Space Management Plan.

Goal 1: Permanently Protect the Land and Water

Objectives:

- $ Complete the land protection process for Caribou Ranch Open Space.
- $ Adopt and implement the Caribou Ranch Open Space Management Plan.
- $ Provide land management staffing needs of Nederland area open space properties, including Caribou Ranch Open Space.
- $ Work cooperatively with surrounding property owners to protect the natural and cultural resources of the property and its environs.
- $ Monitor the well being of the natural and cultural resources, as well as the visitor experience, and amend the plan when appropriate.

Goal 2: Maintain the Structure and Function of the Diverse Ecosystems, and the Watershed Functions of the Property.

Objectives:

- $ Maintain a mosaic of existing native plant communities.
- $ Maintain viable populations of existing native vertebrate and invertebrate populations.
- $ Restore and reintroduce appropriate native plant and animal species.
- $ Eradicate, suppress or contain, as appropriate, undesirable plant and animal species.

$ Minimize the chance for human and domestic animal degradation of surface waters.

Goal 3: Preserve the Cultural, Historical and Archaeological Integrity of the Area.

Objectives:

$ Determine the cultural and historical sites most appropriate for public visitation and develop strategies for preservation of these sites.
$ Identify areas of the property that will be off limits to visitors to protect significant archaeological, historic, and cultural features from vandalism.
$ Determine the proper level of preservation, research and inventory for each cultural site.

Goal 4: Provide Opportunities for Passive Outdoor Recreation for the Public.

Objectives:

$ Develop access to the property that minimizes impacts to surrounding property owners, and provides information, parking and rest rooms for the visiting public.
$ Develop trails that provide access to places appropriate for public use, and direct people away from sensitive resources.
$ Develop a trail that highlights the rich cultural history, wildlife, and scenery of the property, is 4-5 miles in length, and geared towards family enjoyment.
$ Develop a trail that provides a connection to trails to the north of Caribou Ranch Open Space.
$ Where feasible, provide opportunities for seniors and handicapped citizens.

Goal 5: Provide Opportunities for Cultural and Environmental Interpretation for the Public.

Objectives:

$ Highlight the cultural history of the Switzerland Trail Railroad, Blue Bird Mine Complex, Batesville, and DeLonde Homestead by managing these sites for some level of public visitation.
$ Provide kiosks, brochures, and interpretive signs for self-interpretation of significant features.
$ Offer guided field trips to interpret significant features for visitors.

Implementing the goals and objectives are more fully described in the following sections on Vegetation Resource Management, Wildlife Resource Management, Cultural Resource Management, and Visitor Service Management.

7.0 VEGETATION RESOURCE MANAGEMENT

The *Boulder County Comprehensive Plan* Goals and Policies emphasize:

- The conservation, preservation, and protection of significant plant communities, wetlands, riparian areas, rare plant sites, and other stands of important vegetation, such as willow carrs and old-growth forests;
- The management of riparian areas using or mimicking natural processes, ensuring suitable minimum and maximum stream flows, maintaining or reintroducing native species, eliminating undesirable exotic plants, and minimizing human impacts;
- Discouraging the introduction of exotic or undesirable plants and work to eradicate existing infestations.

The Caribou Ranch Open Space Management Objectives further emphasize:

- Maintaining a mosaic of existing native plant communities;
- Restoring and reintroducing appropriate native plant species;
- Eradicating, suppressing or containing, as appropriate, undesirable plant species.

7.1 Protecting Significant Resources

Several significant plant communities and one rare plant site were identified through field inventories (Figure 2). The most significant plant community is the DeLonde Willow Carr. Other sites of importance are the kettle ponds, wetland and riparian complex, big sagebrush shrubland, old-growth woodlands and forests, and ponderosa pine/elk sedge montane woodland.

Management for most of these sites will follow normal management practices for forests, grasslands, and weeds, which are further described in the following sections. Additionally, the following practices should be followed in managing significant vegetation resources:

- Activities in or near significant resources should only be carried out with knowledge of the most current information and best management practices, and need to be performed in a manner that protects the resource.
- Where possible, avoid fragmentation of significant sites by roads and trails.
- Increase public awareness of the benefits of protecting areas determined to be significant to natural diversity. Increasing the public's knowledge of the remaining significant areas will build support for the initiatives necessary to protect them. Such activities could be done through interpretive signs, direct public involvement in management, information pamphlets, and public service announcements.

It is probable that DeLonde Willow Carr was larger in size during pre-settlement times. It was
typical for early homesteaders to reduce the size of wetlands by removing beaver in order to expand pastures and hay meadows. Almost 20% of all montane and subalpine willow carrs in Boulder County have been changed to other land uses. Willow carrs are significant plant

communities as well as important wildlife habitat.

Management activities to enhance DeLonde Willow Carr are:

- DeLonde Willow Carr will be expanded in size to its west. Initial steps toward restoration will be to eliminate some of the haying that occurs nearest the riparian corridor; this will allow woody vegetation to expand. Further restoration efforts will be based on additional studies of hydrology, the response of vegetation to the elimination of haying, and the response of animals (particularly beaver) to the new vegetation. The feasibility of relocating the current road to DeLonde Homestead, which crosses DeLonde Creek between the willow carr and the restoration area, will be investigated.

7.2 Forest Management

Forests are the predominant type of vegetation on Caribou Ranch Open Space. Lodgepole pine forests are most common, along with mixed conifer forests and woodlands, Engelmann spruce-subalpine fir forests, and ponderosa pine forests and woodlands. Aspen dominates several small patches and is also found mixed with other coniferous forest types.

It is probable that a majority of the forest on Caribou Ranch Open Space was cut or burned during the settlement era of the 1850s through 1910. Much of the forest we see today originated during that time period. Early photographs reveal that aspen covered more of the property in the post-fire forest of the first half of the 20th century. Ponderosa pine and mixed-conifer woodlands found on south and southeast facing aspects were open enough to survive the fires; today these sites contain many of the oldest trees on the property. Fire history studies reveal a mean-return fire interval on the order of 150 years or greater. The regional climate appears to be the most important factor in the large-scale forest fires that influence this area rather than the buildup of fuels.

Today's forests are within the historical range of variability. It is probable that at some point in the future there will likely be a major fire, probably occurring when there has been a regional drought, which will start a successional process. Eventually, aspen forests will again dominate much of the property for 50 or more years until overtaken by conifers. Trying to manage large portions of the forest to preclude wildfire has significant ecological costs for those species, both plant and animal, which favor a closed canopy forest. Thinning lodgepole pine and spruce-fir forests tends to simplify the forest structure and removes important ecological components.

Closed canopy is the successional forest stage that much of the property has coevolved to be in for most of the time. A fire, an ecological pulse that creates a mosaic of burned and unburned patches, then breaks this stage. Aspen and lodgepole will then regenerate in the burned patches, which are also full of snags that benefit a host of animals. The landscape contains other patches that are less prone to stand replacing fires, including mixed-conifer woodlands, meadows, wetlands, and riparian areas.

The forest management to occur on the property will focus on particular sites with an aim toward protection of structures, both on and near the property, key cultural and ecological features, and watershed values.

Management activities for the forests are:

- <u>Protection of Cultural Resources</u>: Forest stands around the Blue Bird Mine Complex and

DeLonde Homestead should be kept open through thinning.

- Maintaining Forest Health: This task has several components. Insects and disease, which are natural elements of our forest, will be managed on a case-by-case basis. The montane forest in the southeast portion of the property should be managed to retain a healthy forest. This area currently contains small meadows of native grasses, which could be expanded through forest thinning. This will also provide a fuel break between open space and adjacent land located to the south and east. More detailed stand prescriptions will be developed for this area.
- Protection of Key Ecological Features: The mixed-conifer woodland of DeLonde Gulch is a significant wildlife habitat and plant community. Occasional ground fire through this ecosystem has helped maintain the openness of the site. Currently, the site is not in need of any management. Stand density should be periodically monitored. In the future, in the absence of natural fire, possible thinning and/or prescribed fire may be considered.
- Protection of Watershed Values: While we do not wish to actively manage large portions of the property, consideration will be given to exploring the creation of some fuel breaks in the northern part of the property. These may utilize existing features such as Rainbow Lakes Road and Silver Lake Pipeline, or try and tie together existing woodlands and aspen forests, which already act as natural fuel breaks. The potential for a fuel break in this vicinity needs additional study, as well as coordination with the City of Boulder Watershed and the U.S. Forest Service.
- Stopping Wildfires and Performing Reclamation: The mode of operation is to aggressively control all wildfires and extinguish them at the earliest time possible. Additionally, post-fire reclamation will aggressively work to control erosion and sedimentation in order to minimize the impacts to surface water. The County will coordinate with the City of Boulder Watershed, as well as the U.S. Forest Service and the Nederland Fire Protection District, to work towards a well-planned strategy for wildfire fighting and post-fire reclamation.

The primary tools for active forest and woodland management include thinning, pruning, and prescribed burns. Following are descriptions of these tools:

- Thinning and Pruning of Forests and Woodlands: This management tool is utilized in order to decrease stand density. It allows fire to be a more effective and less dangerous agent by reducing tree density, maintaining less hazardous fuel types, and eliminating ladder fuels. Thinning generally focuses on removing understory trees, as well as many seedlings and saplings.
- Use of Prescribed Burns: Prescribed burns are appropriate in those ecosystems where ground fires helped retain an open canopy. They help reduce fuel loads that may help reduce the risk or severity of wildland fire. Areas to be burned may receive an initial thinning and pruning of trees in order to allow the fire to be more effective.

  Prescribed burns are carefully planned. Boulder County Parks and Open Space will coordinate with local fire districts, the County Sheriff's Office, and other appropriate land management agencies and fire districts. Carefully developed burn plans are written for each prescribed fire. The burn plan provides for a window of opportunity during which predetermined environmental conditions must exist in order for the burn to be conducted.

During this window, officials test conditions such as wind direction, temperature, and moisture to determine if conditions are appropriate for the burn. A prescribed burn will not be conducted unless conditions are appropriate for a safe and effective burn. The monitoring of plant communities before and after each burn is important in order to measure the effects of each fire and provide data to better plan future events.

7.3 Grassland Management

Grassland plant communities are found at several sites on the property and are significant components in woodlands and in some stands of aspen. DeLonde Meadow is the largest grassland and is dominated by introduced pasture grasses. Small meadows of native grasses are found interspersed with stands of ponderosa pine in the southeast corner of the property. Native grasses form significant understories in the woodlands of DeLonde Creek.

DeLonde Meadow encompasses approximately 40 acres, of which about 30 acres are grassland. Since settlement the property, it has been used for haying, livestock grazing, and probably some crop production. Much of the meadow is irrigated from Como Ditch #5, whose point of diversion is from DeLonde Creek just west of the meadow. Probable changes to plant communities resulting from human activities in the meadow include a decrease in native riparian shrublands and grasslands, a decrease in native upland grasslands, and an increase in introduced pasture grasses, particularly smooth brome, timothy, orchard-grass and Kentucky blue-grass.

Recently, the primary use of DeLonde Meadow has been haying. Irrigation is still conducted. The property is inadequately fenced for well-controlled livestock grazing. The site has historically been used as a stock driveway to move livestock to the U.S. Forest Service grazing allotment (Caribou Allotment) to the west of Caribou Ranch Open Space. As part of the purchase contract with Jim Guercio, the Guercios lease back the property and water rights for agricultural purposes (grazing and ranching) until December 2016.

Consideration was given to trying to convert DeLonde Meadow back to native grasses. It was felt that conversion would probably only be achieved with considerable time and cost. The introduced pasture grasses have functional values as forage and soil binders. They are also part of the cultural fabric of the DeLonde Homestead, particularly as hay meadows.

Management activities for DeLonde Meadow are:

- Irrigation and Haying: Continue irrigation and fall haying in portions of the meadow previously hayed, less areas where the DeLonde Willow Carr will be expanded (see Section 7.1 – Protection of Significant Resources).
- Livestock Grazing: Use DeLonde Meadow and DeLonde Creek as a stock driveway for the purpose of moving cattle from Caribou Ranch to Caribou Allotment. Animal numbers, grazing periods, and the degree of utilization of forage through DeLonde Meadow will be controlled. During up and down movements, the time spent in DeLonde Meadow will generally be restricted to short time intervals (1 day), however, this may vary depending on objectives. Cattle will need to be herded during the move, as fencing is impractical. Other livestock grazing (other than incidental to moving cattle to and from Caribou Allotment) is to be planned and controlled grazing where objectives are achieved by using temporary fencing or full-time herding.

Other grasslands on the property will be managed only if part of a prescribed fire in

conjunction with forest management (see Section 7.2 – Forest Management), or for weed management (see Section 7.4 – Weed Management).

7.4 Weed Management

The movement of people and livestock west brought noxious weeds into Boulder County. Sometimes the transplanting was with purpose; often it was inadvertent as the seed was mixed with luggage or livestock. There is an historical account of ox-eye daisy first coming to Boulder County at Caribou Ranch in the early 1900s. A traveler from Chicago arrived at the Blue Bird Station of the Switzerland Trail railroad with ox-eye daisy seeds in his coat pocket. Ox-eye daisy is now considered a noxious weed and is prevalent at several sites on Caribou Ranch Open Space.

Other noxious weeds present on the property include musk thistle, Canada thistle and yellow toadflax. Mullein is present in disturbed sites. Cheat-grass, which can cause early fire danger because the plant matures and cures earlier than most native grasses, is present in meadows and woodlands.

Boulder County utilizes an integrated pest management approach to weed management that includes manual removal, prescribed fire, mechanical, biological, and herbicidal methods. Weed control activities were initiated on Caribou Ranch Open Space in 2001. Manual and herbicidal control were initiated against ox-eye daisy and musk thistle. Weed control efforts will continue as needed. Emphasis will be placed on controlling ox-eye daisy, musk thistle, Canada thistle, and yellow toadflax.

Herbicides are used only under strict guidelines. Those herbicides that are persistent in soil and move easily in water are used as spot applications away from sensitive vegetation and streams. Herbicides with low toxicity, low movement in water, and active on few plant families can have a wider application. In the mountains of Boulder County, herbicides can only be used on County Open Space properties that are open to the public if the Board of County Commissioners grants permission.

8.0 WILDLIFE RESOURCE MANAGEMENT

The *Boulder County Comprehensive Plan* Goals and Policies emphasize:

- Preserving and minimizing impacts to critical wildlife habitat, wetland, and riparian areas;
- Protecting critical elk range and migration routes by minimizing human disturbance and providing seasonal habitat needs;
- The conservation and preservation of Environmental Conservation Areas (Caribou Ranch Open Space is within the Indian Peaks ECA) in order to perpetuate species, communities and processes that function over large geographic areas and require a high degree of naturalness.

The Caribou Ranch Open Space Management Objectives further emphasize:

- Maintaining viable animal populations;

- Restoring or reintroducing native animals;
- Eradicating, suppressing or containing, as appropriate, undesirable animals;
- Directing people away from sensitive areas.

8.1 Protecting Significant Resources

Caribou Ranch Open Space is part of a montane parkland. This site is an important node of biodiversity and one of only three remaining intact montane parklands in western Boulder County. The overall diversity and density of species is significantly high in comparison to the surrounding land.

Several significant wildlife resources on Caribou Ranch Open Space were identified through field inventories (Figures 3 and 4). DeLonde Willow Carr and several Mixed-Conifer Woodlands are significant habitat as indicated by high breeding bird diversity and density. Townsend's Big-eared Bats are known to utilize mine adits on the property. Northern goshawks are known to utilize two areas on or near the property for post-fledging family activities. Due to the lack of fish in DeLonde Creek, an opportunity may exist to successfully introduce native greenback cutthroat trout.

A herd of approximately 175 elk uses the property, primarily as transitional range in spring and fall. Calving and rutting activities occur on the ranch. While the main herd moves to higher elevation during the summer, individuals are present throughout the season. Elk may also be present during mild winters. Caribou Ranch Open Space has functioned as a refuge for elk. Because of this, two management situations arise. First, it is probable that once opened to the public there will be a higher human presence on the property. While elk can be adaptable animals, they can also be wary of humans. Behavior is often shaped by several factors including whether or not they are hunted on portions of their range. This herd is hunted with the location depending on the timing of each season in relation to snow depth. Illegal hunting also occurs. Observations suggest that these elk are wary of people walking through a natural landscape; they will expend energy fleeing from people hiking. Studies have shown that elk are vulnerable to human disturbance during the calving season. How much they will habituate to people on the property is an unknown. Consideration needs to be taken to minimize interaction, particularly during significant biological times such as calving and rutting. Secondly, there has been a tendency for elk to utilize the property as a refuge during hunting season, possibly minimizing one form of population control. There is information that the herd has been increasing in size, and there is some evidence of elk impacts on aspen. Monitoring of both herd population and impacts to vegetation are recommended. Active herd population management may be necessary if significant resource damage occurs.

The use of Caribou Ranch Open Space for public access and recreation will generally present a level of human presence that is higher than recent historic use. How different animals react to recreationists is a complex issue, but many studies have shown adverse effects from nonconsuptive outdoor recreation, including nonmotorized trail use, due to displacement, lower nesting success, and greater predation. In this respect, trails are an extension of the overall impacts occurring in Boulder County due to development and an increased human presence on the landscape. There is a general community shift in animals and plants from those less tolerant of people to those more tolerant. The need for sizeable blocks of land with little human presence ("effective habitat") is becoming more important.

Wildlife management activities on Caribou Ranch Open Space are:

- Implement a spring closure (April 1 – June 30) of the property for protection of elk calving.
- Implement a year round wildlife closure in the DeLonde Gulch Conservation Area (see Figure 6 in Section 10.1 – Management Areas) to protect: effective habitat for a wide variety of resident and migratory species; a northern goshawk post-fledging family area; an elk fall concentration area, portion of a spring concentration area and movement corridors; the habitat values of the largest mixed-conifer woodland on the property.
- Implement a closure in the DeLonde Willow Carr Conservation Area (see Figure 6 in Section 10.1 – Management Areas) to protect: effective habitat for a wide variety of resident and migratory species; a portion of an elk spring concentration area; and the habitat values of DeLonde Willow Carr, the 5th largest montane willow carr in Boulder County.
- Other temporary trail closures may be implemented in the fall (September 1 – November 15) in order to protect fall elk rutting from human interference.
- Because of the exceptional wildlife values of the property and the almost year round presence of elk, domestic dogs should be prohibited from the property.
- Mine openings and adits should be enclosed in such a way that allows bats to enter and exit, and prohibits people from entering.
- The DeLonde Willow Carr Critical Wildlife Habitat should be expanded (see section 7.1 – Protection of Significant Vegetation Resources – for more information).
- Trail locations should minimize habitat fragmentation, should be directed away from critical resources, and visitor policies should encourage the public to stay on trails so their activities and movements on the property are predictable to wildlife.
- Control of elk populations, through hunting or other forms of population control, should be retained as a management option if elk numbers approach carrying capacity, or for management of disease.

9.0 CULTURAL RESOURCE MANAGEMENT

The *Boulder County Comprehensive Plan* Goals and Policies emphasize:

- The conservation and preservation of unique or distinct cultural features and sites.
- The identification and protection of prehistoric and historic sites which meet national, state or local criteria for historic designation from destruction or harmful alteration.
- The County should nominate resources found on open space that meet the criteria for local landmark, or State or National register status.

The Caribou Ranch Management Objectives further emphasize:

- Determine the cultural and historical sites most appropriate for public visitation and develop strategies for preservation of these sites.
- Identify areas of the property that will be off limits to visitors to protect significant archaeological, historic, and cultural features from vandalism.
- Determine the proper level of preservation, research, and inventory for each cultural site.

9.1 Protecting Significant Resources

The property is rich in cultural resources. The majority of these that are most visible on the property is of an historic nature and associated with early settlement, ranching, mining, and transportation. The Denver, Boulder & Western Railroad ("The Switzerland Trail") runs through the property and is listed on the National Register of Historic Places. The Blue Bird Mine Complex is a multi-component site with a small company community associated with mining and the railroad. Batesville was the site of North Boulder Mill. The DeLonde Homestead reflects several periods of ranch development. Besides these sites, there were 137 isolated finds on the property that were both prehistoric and historic in nature.

A number of prehistoric sites and isolated finds were documented on the property. Native American use should be an interpretive theme. However, due to the sensitivity of these archaeological resources, specific sites will not be used for interpretation and visitor use will be directed away from them. Parks and Open Space regulations prohibit the removal of any artifacts by visitors. All visitors should respect the sensitivity of these sites.

Several of the significant historic cultural resources lend themselves to preservation, interpretation and visitor enjoyment. These will be a major part of the experience of visiting Caribou Ranch Open Space. There is, of course, a risk to allowing public access to historic structures. Vandalism could occur. Having only foot and horse access of around 2 miles to the sites lessens the risk, but does not get rid of it. But we think that it is worth taking that risk so the citizens of Boulder County can fully appreciate this property.

While surface archaeological surveys have been conducted, there is still much research to be done. Some structural stabilization and weatherproofing has been undertaken. Historical structural assessments are planned. More detailed planning will be done in order to determine how and what to preserve, rehabilitate, research, inventory, let decay, and interpret.

Cultural resource management activities on Caribou Ranch Open Space are:

- The Switzerland Trail, Blue Bird Mine Complex, DeLonde Homestead, and Batesville will be managed for public visitation (see section 10.0 – Visitor Services).
- The Switzerland Trail Railroad is listed as a National Historic District. It will be interpreted, along with related features such as the townsite of Anson, the stop at Blue Bird, and the trestles at Blue Bird and the North Boulder Creek crossing.
- The Blue Bird Mine Historic District should receive Local Landmark status. The bunkhouse and stone building will be top priorities for preservation, and possible rehabilitation. Most other features will be preserved. Mine openings and adits will be secured from public entry for safety.
- Batesville primarily consists of the foundation of the North Boulder Mill. This site will be preserved and interpreted.
- The DeLonde Homestead should receive Local Landmark status. The house and barn will be preserved, and possibly rehabilitated. The house, barn, hay meadows, irrigation ditch, and other related features will be interpreted.
- Historic debris and dumb sites will be protected.
- Utilize fencing, demarcated walkways, and interpretive signage to help control public use.
- Implement a year round closure in the DeLonde Willow Carr Conservation Area (see Figure 6 in Section 10.1 – Management Areas) due to the sensitive archaeological

resources.

10.0 VISITOR SERVICES

The Boulder County Comprehensive Plan Goals and Policies emphasize:

- That provision should be made for open space to meet human needs throughout the County in order to protect and enhance the quality of life and enjoyment of the environment.
- The foremost management objectives of individual open space lands shall follow directly from the purposes for which the land was acquired.
- Recreational use of open space is permitted where such use does not adversely impact natural and cultural resources; use is limited to passive recreation and only limited development and maintenance of facilities will be provided.
- Trails and trailheads are planned, designed, and constructed to avoid or minimize degradation of natural and cultural resources, and adverse impacts on private lands should be minimized.
- Accessibility for special populations is addressed on a system-wide basis.
- The County, through the Parks and Open Space Department, shall provide appropriate educational services for the public to increase public awareness of significant resources and appropriate land management. There should be: cooperation with schools and non-profit organizations; accommodation of the needs of diverse populations where feasible; dissemination of information through publications, exhibits, and other media; and the utilization of trained volunteers, cooperating groups, and private individuals to assist in the delivery of environmental and interpretive services.

Passive Recreation is defined as:

> "Outdoor activities that create opportunities for independence, closeness to nature, and a high degree of interaction with the natural environment and which require no organization, rules of play, facilities, or the installation of equipment, other than those which may be necessary to protect the natural environment."

The Open Space Tax Resolution (Resolution No. 93-174) approved by the voters of Boulder County, and whose funds were used to acquire Caribou Ranch Open Space, provides further direction regarding appropriate recreational use of the property. The resolution cites six functions that open space may serve, including urban shaping buffers, preservation of critical natural and historic resources, trail linkages and public access, areas of environmental preservation, conservation of natural resources, and:

> "preservation of land for outdoor recreation areas limited to passive recreational use, including but not limited to hiking, photography or nature studies, and, if specifically designated, bicycling, horseback riding, or fishing."

The Caribou Ranch Management Objectives further emphasize:

- Adopt and implement the Caribou Ranch Open Space Management Plan.
- Provide land management staffing needs of Nederland area open space properties, including Caribou Ranch Open space.
- Work cooperatively with surrounding property owners to protect the natural and cultural resources of the property and its environs.
- Minimize the chance for human and domestic animal degradation of surface waters.
- Develop access to the property that minimizes impacts to surrounding property owners, and provides information, parking and rest rooms for the visiting public.
- Develop trails that provide access to places appropriate for public use, and direct people away from sensitive resources.
- Develop a trail that highlights the rich cultural history, wildlife, and scenery of the property, is 4-5 miles in length, and geared towards family enjoyment.
- Develop a trail that provides a connection to trails to the north of Caribou Ranch Open Space.
- Where feasible, provide opportunities for seniors and handicapped citizens.
- Highlight the cultural history of the Switzerland Trail Railroad, Blue Bird Mine Complex, Batesville, and DeLonde Homestead by managing these sites for some level of public visitation.
- Provide kiosks, brochures, and interpretive signs for self-interpretation of significant features.
- Offer guided field trips to interpret significant features for visitors.

Caribou Ranch Open Space possesses the size, terrain, scenery, views and resources which can make it a place that people will enjoy visiting. The primary activities on the property will include hiking, horseback riding, cross-country skiing and snowshoeing when appropriate, and learning about the many cultural and environmental resources on the property. Opportunities may also exist for citizens with special needs. As agreed to at the time of purchase, mountain biking will not be permitted on the property.

Any use of the property must be compatible with the protection of the resources. Some direct and indirect impacts from recreation include displacement of wildlife, spread of exotic plants, spread of water-borne disease, soil compaction, erosion and the loss of vegetation, and vandalism. Every effort needs to be made to lessen human impact on the resources, direct visitors to less sensitive areas, and to design for human use that minimizes resource damage. But in all likelihood, there will be some level of impact.

What should not be forgotten, while looking at balancing resource protection with public use, were the potential impacts from the development that was precluded by purchase of the property as open space. Approximately 62 homes could have been built on this acreage; potentially more if the land had been annexed to a municipality. The impacts to wildlife, plant, and water resources would have been greater from the development. Studies in Boulder County reveal significant avian and mammalian community changes where residential development exists or is nearby; generalists increase and specialists decrease to a degree much greater than impacts documented so far from nonmotorized trail use. Bears and lions that hang around homes eventually are removed. Elk probably would have still used the property, but it is likely that calving would have occurred someplace else. The level of exotic plant introduction and stream sedimentation is potentially greater in residential developments with their homes, roads and driveways.

The following sections more fully describe how visitor use will be managed on the property.

10.1 Management Areas

We have identified Management Areas, which describe the land use emphasis, to balance resource protection with visitor use. Significant factors influencing the management areas are:

- Caribou Ranch Open Space is part of a montane parkland, a node of exceptional biodiversity.
- Elk use of the property is nearly year round, with high and sensitive use periods during spring (calving) and fall (rutting).
- There is a need to retain one or more large blocks of land within the property with high effective habitat.
- There is a need to minimize human and domestic animal contact with surface waters to help retain high quality watershed values.
- There are unique and exceptional historical resources on the property.
- There is a desire from the public to enjoy the special resources of the property and to have a route through the property connecting with trails to the north.

There are several special management actions that will apply to the entire property. We believe these are necessary for proper resource protection. These are:

- There will be a spring closure of the property (April 1 – June 30). The primary reason is for elk calving. This is probably the most critical time for elk, and calving occurs throughout the property. Many other animal species will benefit from this closure.
- Domestic dogs will not be allowed on the property. We believe the wildlife resources are truly special in this montane parkland. This land has greater wildlife value than the surrounding landscape to the north, west, and south. While we are proposing a spring closure to protect elk, they are also present in good number in the fall and can be present at all other times. This action will also help protect water quality, as domestic dogs can be carriers of water-borne disease.
- As a condition of the purchase agreement, mountain bikes will not be allowed on the property.

Management Areas distinguish between areas more suitable for resource protection and areas more suitable for visitor use. Proposed Management Areas for Caribou Ranch Open Space (Figure 6) include a Cultural Heritage Area, a Trail Alignment Study Area, and two Conservation Areas. Following are descriptions of the Management Areas.

Cultural Heritage Area: This area will be the primary focus of the visitor experience and will receive the highest use on the property. Within this area are the Blue Bird Mine Complex, DeLonde Homestead, and a portion of the Switzerland Trail Railroad grade. Considerable work will be needed to preserve and protect these historic sites (see section 9.0 – Cultural Resource Management).

The entrance and parking area will be off of County Road 126 (Sherwood Gulch Road) or off

Figure 6 – Management Areas

of County Road 109J (a spur road off of CR 126) (see section 10.2 – Recreation Facilities and Figure 7). Additional study is required for locating the parking area and entrance. From here, a trail will connect to the Switzerland Trail Railroad grade, and will proceed to the Blue Bird Mine Complex. The distance from the Trailhead Study Area to the Blue Bird Mine Complex ranges in distance from 1.5 to 2.5 miles (depending on the location of the trailhead). Off of the Switzerland Trail will be a loop trail connecting to the DeLonde Homestead. The depicted location on Figure 7 for the loop trail is conceptual and the final alignment could be in a different location. The loop trail will be approximately 1 mile in length. Hiking, horseback riding, cross-country skiing and snowshoeing are the allowed modes of travel. As a matter of the purchase agreement, there will also be a spur trail connecting to the loop from the Caribou Ranch Homestead to provide access for its residents into the public trail system.

Fishing will be permitted in the segment of North Boulder Creek within this management area. Additional study and coordination with the Colorado Division of Wildlife is needed to determine appropriate fisheries management and regulations.

Management activities for this area include:

- Preserve and protect the cultural resources in order to allow public visitation.
- Offer one guided special access field trip to the Blue Bird Mine Complex annually for seniors and handicapped citizens.
- Develop a cultural history program focused on the Blue Bird Mine Complex.
- Develop a natural resource program and guided walks that are focused on the fall elk rut.
- Design and produce interpretive materials for the Switzerland Trail Railroad, Blue Bird Mine Complex, and DeLonde Homestead.
- Investigate the feasibility of relocating the current road to DeLonde Homestead, which would benefit the DeLonde Creek riparian corridor. This will influence the location of the loop trail.

Trail Alignment Study Area: This area will be for more rugged trail travel in a natural environment. Our goal is to find a suitable trail alignment that provides a connection to the north, to USFS lands and the Sourdough Trail. The Switzerland Trail may be a possibility, as is an alternative alignment that would more closely follow Rainbow Lakes Road. Additional study, and coordination with the Forest Service, is needed in order to find a suitable trail alignment. The Boulder District of the Roosevelt National Forest is conducting a planning process for managing recreational use in the area north of Caribou Ranch Open Space. The Forest Service anticipates completing their planning process during the winter of 2002-2003. The Forest Service has concerns regarding trail alignments in this area (impacts to greenback cutthroat trout, raptor nests, and habitat fragmentation). It is not clear if they will recommend a trail in this area. If not, we will consider a route to Rainbow Lakes Road to facilitate a portion of the northern connection. The Trail Alignment Study, when complete, will be brought to the Parks and Open Space Advisory Committee and the Board of County Commissioners for review.

The trail alignment must take into account, and try to minimize impacts on, the significant resources found in the study area, including wetlands, Little Como Creek and its watershed, kettle ponds, elk spring and fall concentration areas and movement corridors, mixed conifer woodlands, raptor nests, and archaeological sites.

This area will also contain a short spur trail to the old town site of Batesville, where the foundation of the North Boulder Mill is still present. The historic site will be preserved and made

suitable for public visitation. Interpretive materials will be designed and produced for the site.

Conservation Areas: Conservation Areas are large blocks of land, which due to their size can protect several smaller significant resources, such as a wetland or an old-growth forest, as well as help meet the needs of animals needing a large, secluded and unfragmented place. Their large size means they can help provide watershed protection. Significant archaeological resources may also be present. Recreational use should be directed away from these areas and they should be considered for permanent closure.

> DeLonde Gulch Conservation Area: This is the largest of the conservation areas and encompasses much of the western half of the property. Significant vegetation resources include: Ponderosa Pine/Elk Sedge Woodland (a Colorado rare plant community), Big Sagebrush Shrubland (uncommon in Boulder County), and Old-Growth Forest (trees as old as 425 years of age). Significant wildlife resources include: Elk Spring and Fall Concentration Areas and Movement Corridor, Mixed-Conifer Woodlands (exceptional breeding bird diversity and density; four avian species of special interest: olive-sided flycatcher, pygmy nuthatch, MacGillivray's warbler, and western tanager), Northern Goshawk Post-Fledging Family Area, and habitat for two additional avian species of special interest: three-toed woodpecker and golden-crowned kinglet. The area also provides exceptional effective habitat for not only elk, but other animals as well. Black bears are regularly seen in this area. Pine marten inhabit the area and are active year round. The area is potential habitat for lynx, providing food (snowshoe hare) and effective habitat (solitude). The area contributes to a high quality watershed: it contains all of the upper portion of DeLonde Creek and its watershed, a significant portion of North Boulder Creek, and the lower portion of Caribou Creek.
>
> DeLonde Willow Carr Conservation Area: DeLonde Willow Carr is a Geyer Willow-Mountain Willow/Canadian Reedgrass Montane Willow Carr, which is a globally rare plant community. It is a deciduous shrubland that occurs in stands interspersed with wet meadows, open stream channels, and beaver ponds. From a wildlife perspective, willow carrs provide rich avian habitat and have the highest breeding bird density of any habitat in Boulder County. DeLonde Willow Carr is the 5th largest montane willow carr in Boulder County. Four avian species of special interest are present at DeLonde: ring-necked duck, veery, MacGillivray's warbler, and fox sparrow. Willow carrs also have exceptional density of small mammals and insects. Willow carr wetlands provide important watershed functions of flood control and water filtering. The conservation area also contains significant sensitive archaeological resources, which is the primary reason why a year round closure is recommended for this area.

10.2 Recreation Facilities

A number of facilities will need development in order to facilitate visitor use of Caribou Ranch Open Space. The primary facilities will be a parking/trailhead area and trails. The general locations for these are depicted on Figure 7.

Access: Access to Caribou Ranch Open Space will be by way of County Road 126 (Sherwood

Figure 7 – Trailhead and Trail Plan

Gulch Road), which heads west from the Peak-to-Peak Highway approximately one mile north of the Town of Nederland, and could also utilize County Road 109J (a spur road off of CR 126). CR 126 is a dirt road, which after .5 miles has some steep and winding sections. It is probable that some improvements to the road will be necessary. The only other possible access location is off of the Rainbow Lakes Road. This road has some of the same problems as CR 126 (dirt, winding, some steep sections), and it would be twice as long (two miles vs. one). Access from CR 126 takes the visitor into one of the most scenic parts of the property, DeLonde Meadow, and is the best way to access the cultural resources that will be a highlight of the visiting public's experience. And, the largest local population center, Nederland, is located to the southeast. Vehicular parking for access off of the Rainbow Lakes Road (County Road 116) will not be permitted, and the current "no parking" rule in effect for this road as it goes through Caribou Ranch Open Space will continue.

Trailhead: Trailheads are important open space facilities because they are the point at which the visitor receives information about what can be seen, as well as the rules and regulations. The trailhead for Caribou Ranch Open Space will be located off of either CR 126 or CR 109J. This is being called a Trailhead Study Area on Figure 7. We wish to conduct a more detailed site analysis and look at such factors as: ecological and cultural resource impacts, road safety, impacts on nearby private property, management and site constraints, and visitor experience. Additionally, a shared trailhead at Mud Lake for all or part of the facilities for Caribou Ranch Open Space is also a consideration. The Trailhead Study, when complete, will be brought to the Parks and Open Space Advisory Committee and the Board of County Commissioners for review. Trailhead facilities will likely include: parking for 25 vehicles (expandable to 50 vehicles) along with several horse trailers; information kiosk; and restrooms. The trailhead area may also contain picnic facilities. The parking lot and restroom will provide handicapped access to portions of the facilities.

Trails: The trail system will consist of two sections. The first is located in the Cultural Heritage Area (see section 10.1 – Management Areas and Figure 6). It will begin at the trailhead, where a trail (shown as a conceptual alignment on Figure 7) will connect to the Switzerland Trail Railroad grade. The Switzerland Trail Railroad grade will take visitors back to the Blue Bird Mine Complex. The distance from the Trailhead Study Area to the Blue Bird Mine Complex ranges in distance from 1.5 to 2.5 miles, depending on the location of the trailhead. Off of the Switzerland Trail will be a loop trail connecting to the DeLonde Homestead. The depicted location in Figure 7 for the loop trail is conceptual and the final alignment could be in a different location. The loop trail will be approximately 1 mile in length. Hiking, horseback riding, cross-country skiing and snowshoeing are the allowed modes of travel. As a matter of the purchase agreement, there will also be a spur connecting to the loop from the Caribou Ranch Homestead to provide access for its residents into the public trail system.

The second portion of trail will be within the Trail Alignment Study Area. This area will be for more rugged trail travel in a natural environment. Additional study is needed of this area in order to locate the trail alignment. Additional consultation is needed with the Forest Service, as well. Our goal is to locate a trail connection to the north. Off of the northern connection will be a short spur trail to the old town site of Batesville.

10.3 Interpretation

Caribou Ranch Open Space provides many interpretive opportunities, which will greatly enhance the public's experience. Interpretation is also an important tool for helping the public to understand management activities. Elements of both cultural and natural history are present on the property.

Interpretive management activities will be:

- Design and publish a general brochure for the property.
- Develop programs, literature and signage to interpret the cultural and natural resources of the property. General themes should include:
    - Ecology of Montane and Subalpine Lifezones
    - Geology
    - Mining and Milling (Blue Bird and Batesville)
    - Mountain Settlements Associated with Mining and Milling (Blue Bird and Batesville)
    - Homesteading and Ranching (DeLonde Homestead)
    - Switzerland Trail Railroad
    - Native Americans
    - Fauna
    - Flora
    - DeLonde Riparian Restoration
- Utilize volunteer naturalists and park hosts to assist in interpretation of cultural and natural resources.
- Develop a cultural history program focused on the Blue Bird Mine Complex.
- Develop a natural history program focused on the fall elk rut.
- Offer one guided special access field trip to the Blue Bird Mine Complex for seniors and handicapped citizens.

Interpretive sites will include those described under Cultural Resource Management (section 9.0).

10.4 Fencing

Fencing is a management tool that can help delineate boundaries, focus access onto open space land from public trailheads, reduce casual access points from private land, control trespass on private land, and control grazing animals. Fencing may also have adverse impacts on animal movement. Currently, there is little functional fencing around Caribou Ranch Open Space. What functional fencing exists is primarily on the east side of the property near the boundary with Caribou Ranch Homestead.

Priority locations for fencing include:

- Along County Road 126 (Sherwood Gulch Road).
- Along the east property line with Caribou Ranch Homestead: this should be a joint venture with Jim Guercio.
- Along portions of the Rainbow Lakes Road and Forest Road 505.

10.5 General Regulations

The following regulations, which apply to all County Open Space, will be applicable to Caribou Ranch Open Space:

- Properties that are open for public use are open from sunrise to sunset. Overnight camping is prohibited.
- Collecting, removing, destroying, or defacing any natural or manmade objects within parks and open space is not permitted.
- Discharging or carrying firearms, crossbows, fireworks, or projectile weapons of any kind is not permitted (except law enforcement officials and as allowed by the Board of County Commissioners to carry out a wildlife management program).
- Ground fires are not permitted. Fires may only be built in established grills and fireplaces in picnic areas. Fires may be prohibited entirely by order of the Board of County Commissioners, the Boulder County Sheriff, or the Director of Parks and Open space by posting of special notices or notification through the press.
- Feeding, disturbing, trapping, hunting, or killing wildlife is not permitted (except as allowed by the Board of County Commissioners to carry out a wildlife management program).
- Motorized vehicles are not permitted (County, emergency, and agricultural lessees on official business are excepted; exceptions may also be granted to persons with disabilities, by written permission from the Parks and Open Space Department, for the use of single-rider, motorized vehicles adapted for recreational use by people with disabilities).
- It is unlawful to place rock bolts, install gates, establish or construct trails or other facility for public or private use without the written permission from the Parks and Open Space Department.
- The Parks and Open Space Department may temporarily close areas to public use for repairs or due to wildlife, vegetation, and/or public safety concerns. It shall be unlawful for the public to enter such areas.
- It is unlawful to consume, possess, or serve alcoholic beverages, as defined by state statute.
- Activities that unduly interfere with the health, safety, and welfare of the users or the neighbors in the area, or that create a nuisance or hazard to the use and safety or persons using or neighboring such areas are prohibited. Disorderly conduct (including amplified sound) shall be prohibited.

10.6 Parks and Open Space Department

Boulder County=s Parks and Open Space program was initiated in the mid-1960s by citizens interested in preserving land from rapid development. The Parks and Open Space Department was formally created in 1975. That year, the county made its first major open space acquisition by acquiring Ernie Betasso=s 773 acre ranch, six miles west of Boulder. Today, the open space program oversees over 65,000 acres of land and 85 miles of trail. Open space is used to: shape and buffer urban areas; preserve critical ecosystems, cultural resources and scenic

vistas; provide access to lakes, streams, and other public lands; conserve forests, agricultural land, and water resources, and protect areas of environmental concern.

Surveys of the users of County Open Space during 2000 provide a picture of whom, how, and how many of us use these properties. In the year 2000, it is estimated that, at a minimum, just over 1 million people used County Open Space. Some of the most popular properties included Bald Mountain, Betasso Preserve, Walker Ranch, Fairgrounds Lake, Hall Ranch, Heil Valley Ranch, Walden Ponds, Lagerman Reservoir, Legion Park, Pella Crossing, Rabbit Mountain and Rock Creek Farm.

The main activities conducted on all open space lands were hiking (40%), mountain biking (21%), picnicking (18%), viewing wildlife (15%), fishing (10%), relax/do nothing (8%), and horseback riding (2%). On some properties such as Betasso Preserve, Hall Ranch, and Walker Ranch, mountain biking comprises about 50% of all use. Horseback riding is most popular at Hall Ranch (7% of all use) and Rabbit Mountain (4% of all use). Most hikers (71%) like to go a distance of between 1-5 miles; mountain bikers (85%) favor distances over 5 miles, as do all equestrians; anglers (67%) favor a distance of a mile or less. Additionally, 81% of open space users claim to stay on designated trails; those who wander off generally go less than 2 mile. Finally, 23% of open space users have lived in the county less than 1 year; 19% have resided 1-4 years; 25 % have resided 5-10 years; and 33 % have resided in the county for more than 10 years.

The field staff of Boulder County Parks and Open Space conducts and/or coordinates construction, maintenance, patrol, and resource management activities on open space lands. Currently, this staff is comprised of approximately 80 full-time and over 45 seasonal employees. The field staff is split into the following divisions:

Resource Management: Conduct resource inventories (wildlife, plants, forests, cultural) and resource management projects; provide patrol and law enforcement; plan interpretive facilities and programs; coordinate volunteer activities.

Operations: Maintain facilities, buildings, roads, and fencing; mow where necessary; conduct trash collection; construct and maintain trails; construct trailhead facilities, picnic areas, group shelters, interpretive facilities and aids; produce and repair signs.

Agricultural Resources: Manage agricultural and grazing leases, and activities.

Weed District: Plan and conduct weed management activities.

10.7 Patrol

Several staff activities will provide patrol of the property. Primary law enforcement responsibilities will be provided by commissioned Sheriff=s Deputies assigned full-time to patrol open space properties. Open Space Rangers have a limited commission to enforce parks and open space regulations only. They also help educate the public about rules and regulations, land management issues, and current resource management projects.

Field Interpreters will also patrol the property to interact with park visitors, interpreting natural and cultural resources, discussing land management issues, explaining current resource management projects, and explaining rules and regulations. While not having law enforcement

responsibilities, Field Interpreters provide a presence and can call in enforcement personnel, if needed.

Property Managers live on Hall Ranch and Heil Valley Ranch open space properties. They provide a wide range of services, including general maintenance, and provide a continual presence on the property. A Property Manager position will be established on or near Caribou Ranch Open Space to provide coverage of the property.

10.8 Emergency Services

Emergency response is provided by a host of agencies, organizations, and fire protection districts. These activities are initially coordinated through a call to the Boulder County Sheriff=s Dispatch Division. From here, depending on the nature of the emergency, appropriate response agencies are called.

Fire protection districts generally provide initial response and coordination for fighting fires. For Caribou Ranch Open Space, this is the Nederland Fire Protection District. This is supplemented with help from Boulder County Sheriff=s Emergency Team, Boulder County Wildland Firefighters, Boulder County Fire Management Team, Colorado State Forest Service, and possibly Federal crews and other fire fighting crews that may have been brought into the area during fire seasons. The mode of operation is to aggressively control all fires and extinguish them at the earliest time possible.

10.9 Volunteer Opportunities

For interested citizens and organizations, many volunteer opportunities exist through Boulder County Parks and Open Space to help maintain the land and provide services to visitors. Most of these programs are organized through the Boulder County Parks and Open Space Interpretive Services, unless otherwise noted. Volunteer opportunities include:

Adopt a Park/Trail: This program gives families, schools, community groups, and businesses an opportunity to be part of the County=s park maintenance system. Generally, there is an adopted site, such as a body of water or trail. Work can include trash pick-up, trail construction/maintenance, weed control, wildlife habitat enhancement, and other park improvements. Parks and Open Space staff provides training.

Park Hosts: Park Hosts work at specific open space properties orienting visitors to the recreational opportunities, resources, and places to enjoy. Park rules may also be discussed with visitors. Parks and Open Space staff provides training.

Volunteer Naturalists: Volunteer Naturalists are trained to provide environmental education programs to the public, school groups, and organizations. Each year one class of 20-25 people, chosen from applicants, completes the training program.

Cultural History Volunteers: Cultural History Volunteers conduct research on the history of open space properties, lead interpretive programs, and are involved with living history special events.

Volunteer Work Projects: Volunteer work projects allow individuals to participate in a variety of activities helping the department undertake and complete resource and interpretive projects. Projects have included waterfowl census, raptor monitoring, trail building maintenance, plant restoration, forest stand improvement, interpretive writing, wildlife projects, bat monitoring, and fire management. Recruitment for volunteers for these projects is advertised through a Parks and Open Space quarterly listing (Wildwork) and coordinated by a lead staff person for the project.

Adopt a Weed-Patch: This program allows groups and individuals the chance to help the county control noxious weeds by hand pulling and cutting. To volunteer, contact the Boulder County Weed District.

The Boulder County Youth Corps is an opportunity for younger people to get involved in community activities, some of which will be conducted on open space. Youths from the ages of 14-17 can apply. The program is designed to provide youths lifetime skills by involvement in specific programs. The Administrative Services Division of Boulder County coordinates the program.

11.0 RESOURCE MONITORING

The Caribou Ranch Open Space Management Objectives emphasize:

- Monitor the well being of the natural and cultural resources, as well as the visitor experience, and amend the plan when appropriate.

Resource monitoring is done to determine if management objectives are being achieved. Monitoring provides a feedback mechanism for decision-making that keeps the plan dynamic and responsive. Monitoring provides information on what changes are occurring on the property. Some resources may be adversely affected resulting in a change in management. Other resources may improve as a result of management activities.

The monitoring of specific resources is performed on a periodic basis. Some inventories are ongoing and occur through routine staff activities. Others are scheduled annually (raptor nest monitoring), or every 5 years (detailed weed mapping). Still other monitoring projects are triggered by particular events, such as the vegetative monitoring needed before and after a controlled burn. Every 5 years, a major evaluation of management direction will be undertaken.

Following are the monitoring activities to be undertaken on this property.

- Vegetation Resources Monitoring
  - Monitor changes in the structure and composition of the vegetation by shooting photo points every 3 years, conducting quantitative transects every 5 years, and analyzing aerial photographs every 10 years. Analyze the information to assist in planning of vegetation treatments, including forest health activities, grazing, and restoration projects, as well as assessing wildlife habitat.
  - Update weed mapping every 5 years. Use the information to plan priorities for weed management.

- Monitor riparian restoration along DeLonde Creek every 3 years. The information will be used to evaluate and plan restoration activities.
- Monitor for forest insects and disease annually and plan appropriate forest health projects.
- Routinely monitor grazing and range resources, whenever grazing is occurring, to insure that objectives are achieved and adverse impacts are minimal.

- Wildlife Resource Monitoring
  - Monitor the population of the elk herd. Coordinate with the Colorado Division of Wildlife on herd population estimates. Conduct vegetation browse plots every 3-5 years to look for resource damage. The information will be used to decide, in coordination with the Colorado Division of wildlife, if additional population control measures are needed.
  - Monitor northern goshawk and other raptor nest sites annually. Use the information to evaluate achievement of wildlife management objectives.
  - Conduct a regular sampling and monitoring program of fish in North Boulder Creek and DeLonde Creek, in cooperation with Colorado Division of Wildlife. The program should be conducted every 3-5 years. The information will be used to evaluate achievement of wildlife management objectives, and influence fishing regulations on North Boulder Creek.
  - Regularly monitor the water quality in ponds and streams to determine effects on aquatic wildlife. As part of this program, search for amphibians, particularly boreal toads, during appropriate times. Information will be used to evaluate achievement of wildlife management objectives.
  - Monitor the populations of breeding birds by conducting surveys every 3-5 years. Information will be used to evaluate whether wildlife management objectives are being achieved.
  - Monitor the populations of bats, with special emphasis on Townsend's Big-eared bat, every 3-5 years. Information will be used to evaluate whether wildlife management objectives are being achieved.
  - Continue monitoring the presence and distribution of mid-sized predators with scent-stations at least every 3 years. Information will be used to evaluate whether wildlife management objectives are being achieved.

- Cultural Resource Monitoring
  - Routinely monitor the cultural resources open to public visitation through regular department activities, including patrol. Appropriate action will be taken to correct problems in a timely manner.
  - Monitor other cultural resources annually. Appropriate action will be taken to correct problems in a timely manner.

- Visitor Services Monitoring
  - Routinely monitor trails, fencing, buildings, and recreational facilities to identify safety hazards and maintenance needs, and correct them in a timely manner.

- Monitor the property for development of undesignated trails, trailhead capacity, roadside parking, and vandalism. Appropriate action will be taken to correct problems in a timely and responsible manner.
- Monitor water quality, in coordination with the City of Boulder Water Quality Division, to identify impacts from use of the property. The information will be used to evaluate whether watershed objectives are being achieved.
- Monitor for erosion and sedimentation problems where trails cross streams, and along North Boulder Creek within the Cultural Heritage Area annually. Appropriate action will be taken to correct problem areas.
- Collect visitor data consistent with current methods, including vehicle counters, spot studies, and staff observations. Use the information to help update the management direction for the property.
- Monitor who is using the property and how the property is used, as well as the experience of the public, through questionnaires every 5 years. Use the information to help update the management direction for the property.

APPENDIX 1
CARIBOU RANCH OPEN SPACE MANAGEMENT TEAM

Dave Hallock, Resource Planner and Project Manager
Ron Stewart, Director, Parks and Open Space Department
Therese Glowacki, Resource Management Manager
Dan Wolford, Park Operations Manager
Brent Wheeler, Park Operations Manager
Rich Koopmann, Resource Planning Manager
Tina Nielsen, Open Space Assistant
Claire DeLeo, Plant Ecologist
Randy Coombs, Forestry
Rob Alexander, Agricultural Resource Specialist
Cindy Owsley, Weed Coordinator
Mark Brennan, Wildlife Specialist
Dave Hoerath, Wildlife Specialist
Pascale Fried, Interpretive Specialist Supervisor
Megan Davis, Field Interpretation
Lynette Anderson, Parks Interpreter
Cole Early, Cultural History Interpreter
Larry Colbenson, Natural History Specialist
Libby Henits, Law Enforcement
Chris White, Law Enforcement
Jeff Hiebert, Law Enforcement
Jim Creek, Sheriff's Department
Bob Buxton, Maintenance Supervisor
Don Burd, Cultural Resource Maintenance
Barry Shook, Trails Supervisor
Al Hardy, Trails Supervisor
Brian Hannegan, Landscape Architect
Matt Phillips, Landscape Architect
Kevin Lyles, Landscape Architect
Jeff Moline, GIS Mapping
Brad Seaman, GIS Mapping
Janet Bellis, Web Site Management

APPENDIX 2
CONSULTANTS AND ADVISORS

Phyllis M. Pineda, Colorado Natural Heritage Program (Rare Plants, Plant Communities and Animals)
Stephan M. Kettler, Colorado Natural Heritage Program (Rare Plants, Plants Communities and Animals)
Michael B. Wunder, Colorado Natural Heritage Program (Rare Plants, Plant Communities and Animals)
Douglas J. Stevenson, Colorado State Forest Service (Forestry)
Peter M. Brown, Rocky Mountain Tree-Ring Research, Inc. (Fire History)
Alan T. Carpenter, Land Stewardship Consulting (Conservation Planning)
Carron A. Meaney (Mammals)
Ron Beane, Da Ti Mbi Enrivonmental, (Mammals)
Randy VanBuren, Colorado Division of Wildlife (Fisheries, Amphibians)
Janet George, Colorado Division of Wildlife (Biology)
Dr. Ruben Mendoza, Medicine Bow Consultants (Cultural Resources)
Dr. Charles Cambridge, Medicine Bow Consultants (Cultural Resources)
Carol Ellinghouse, Water Resources Coordinator, City of Boulder Utilities Division (Water Resources)
Amy Struthers, Water Quality Supervisor, City of Boulder Utilities Division (Water Resources)
Becky Parmenter, Boulder District, USFS (Biology)
Bev Baker, Boulder District, USFS (Biology)
John Oppenlander, Boulder District, USFS (Recreation)
Martha Moran, Boulder District, USFS (Recreation)

Authorization ID: BOU344
Contact ID: BOULDER PUBLIC WORKS
Expiration Date: 12/31/2044
Use Code: 914

FS-2700-4 (10/09)
OMB No. 0596-0082

U.S. DEPARTMENT OF AGRICULTURE
FOREST SERVICE

SPECIAL USE PERMIT

Authority: FEDERAL LAND POLICY AND MGMT ACT, AS AMENDED October 21, 1976

BOULDER, CITY OF, PO BOX 791, PUBLIC WORKS/ADMINISTRATION, BOULDER, CO 80306 (hereinafter "the holder") is authorized to use or occupy National Forest System lands in the Arapaho-Roosevelt National Forest or unit of the National Forest System, subject to the terms and conditions of this special use permit (the permit).

This permit covers 38.7 acres of pipeline and 5.6 acres of pipeline access route or 5.3 miles of pipeline and 3.1 miles of pipeline access routes in the Secs. 6, 7, 8, 9, T. 1 S., R. 71 W., Secs. 1, 2, 9, 17, T. 1 S., R. 72 W., 6TH PRINCIPAL MERIDIAN , ("the permit area"), as shown on the map attached as Appendix A. This permit issued for the purpose of:

operation and maintenance of a 36 inch water transmission pipeline
Pipeline right of way is 60 feet
Pipeline access routes are 15 feet wide

TERMS AND CONDITIONS

I. GENERAL TERMS

A. AUTHORITY. This permit is issued pursuant to FEDERAL LAND POLICY AND MGMT ACT, AS AMENDED October 21, 1976 and 36 CFR Part 251, Subpart B, as amended, and is subject to their provisions.

B. AUTHORIZED OFFICER. The authorized officer is the Forest or Grassland Supervisor or a subordinate officer with delegated authority.

C. TERM. This permit shall expire at midnight on 12/31/2044, years or months from the date of issuance.

D. RENEWAL. This permit is not renewable. Prior to expiration of this permit, the holder may apply for a new permit that would renew the use and occupancy authorized by this permit. Applications for a new permit must be submitted at least 6 months prior to expiration of this permit. Renewal of the use and occupancy authorized by this permit shall be at the sole discretion of the authorized officer. At a minimum, before renewing the use and occupancy authorized by this permit, the authorized officer shall require that (1) the use and occupancy to be authorized by the new permit is consistent with the standards and guidelines in the applicable land management plan; (2) the type of use and occupancy to be authorized by the new permit is the same as the type of use and occupancy authorized by this permit; and (3) the holder is in compliance with all the terms of this permit. The authorized officer may prescribe new terms and conditions when a new permit is issued.

E. AMENDMENT. This permit may be amended in whole or in part by the Forest Service when, at the discretion of the authorized officer, such action is deemed necessary or desirable to incorporate new terms that may be required by law, regulation, directive, the applicable forest land and resource management plan, or projects and activities implementing a land management plan pursuant to 36 CFR Part 215.

F. COMPLIANCE WITH LAWS, REGULATIONS, AND OTHER LEGAL REQUIREMENTS. In exercising the rights and privileges granted by this permit, the holder shall comply with all present and future federal laws and regulations and all present and future state, county, and municipal laws, regulations, and other legal requirements that apply to the permit area, to the extent they do not conflict with federal law, regulation, or policy. The Forest Service assumes no responsibility for enforcing laws, regulations, and other legal requirements that fall under the jurisdiction of other governmental entities.

G. NON-EXCLUSIVE USE. The use or occupancy authorized by this permit is not exclusive. The Forest Service reserves the right of access to the permit area, including a continuing right of physical entry to the permit area for inspection, monitoring, or any other purpose consistent with any right or obligation of the United States under any law or regulation. The Forest Service reserves the right to allow others to use the permit area in any way that is not inconsistent with the holder's rights and privileges under this permit, after consultation with all parties involved. Except for any restrictions that the holder and the authorized officer agree are necessary to protect the installation and operation of authorized temporary

improvements, the lands and waters covered by this permit shall remain open to the public for all lawful purposes.

H. ASSIGNABILITY. This permit is not assignable or transferable.

I. TRANSFER OF TITLE TO THE IMPROVEMENTS.

1. Notification of Transfer. The holder shall notify the authorized officer when a transfer of title to all or part of the authorized improvements is contemplated.

2. Transfer of Title. Any transfer of title to the improvements covered by this permit shall result in termination of the permit. The party who acquires title to the improvements must submit an application for a permit. The Forest Service is not obligated to issue a new permit to the party who acquires title to the improvements. The authorized officer shall determine that the applicant meets requirements under applicable federal regulations.

II. IMPROVEMENTS

A. LIMITATIONS ON USE. Nothing in this permit gives or implies permission to build or maintain any structure or facility or to conduct any activity, unless specifically authorized by this permit. Any use not specifically authorized by this permit must be proposed in accordance with 36 CFR 251.54. Approval of such a proposal through issuance of a new permit or permit amendment is at the sole discretion of the authorized officer.

B. PLANS. All plans for development, layout, construction, reconstruction, or alteration of improvements in the permit area, as well as revisions to those plans must be prepared by a professional engineer, architect, landscape architect, or other qualified professional based on federal employment standards acceptable to the authorized officer. These plans and plan revisions must have written approval from the authorized officer before they are implemented. The authorized officer may require the holder to furnish as-built plans, maps, or surveys upon completion of the work.

B. CONSTRUCTION. Any construction authorized by this permit shall commence by N/A and shall be completed by N/A.

III. OPERATIONS.

A. PERIOD OF USE. Use or occupancy of the permit area shall be exercised at least days each year.

B. CONDITION OF OPERATIONS. The holder shall maintain the authorized improvements and permit area to standards of repair, orderliness, neatness, sanitation, and safety acceptable to the authorized officer and consistent with other provisions of this permit. Standards are subject to periodic change by the authorized officer when deemed necessary to meet statutory, regulatory, or policy requirements or to protect national forest resources. The holder shall comply with inspection requirements deemed appropriate by the authorized officer.

C. OPERATING PLAN. The holder shall prepare and annually revise by an operating plan. The operating plan shall be prepared in consultation with the authorized officer or the authorized officer's designated representative and shall cover all operations authorized by this permit. The operating plan shall outline steps the holder will take to protect public health and safety and the environment and shall include sufficient detail and standards to enable the Forest Service to monitor the holder's operations for compliance with the terms and conditions of this permit. The operating plan shall be submitted by the holder and approved by the authorized officer or the authorized officer's designated representative prior to commencement of operations and shall be attached to this permit as an appendix. The authorized officer may require an annual meeting with the holder to discuss the terms and conditions of the permit or operating plan, annual use reports, or other concerns either party may have.

D. **INSPECTION BY THE FOREST SERVICE**. The Forest Service shall monitor the holder's operations and reserves the right to inspect the permit area and transmission facilities at any time for compliance with the terms of this permit. The holder's obligations under this permit are not contingent upon any duty of the Forest Service to inspect the permit area or transmission facilities. A failure by the Forest Service or other governmental officials to inspect is not a justification for noncompliance with any of the terms and conditions of this permit.

IV. RIGHTS AND LIABILITIES

A. LEGAL EFFECT OF THE PERMIT. This permit, which is revocable and terminable, is not a contract or a lease, but rather a federal license. The benefits and requirements conferred by this authorization are reviewable solely under the procedures set forth in 36 CFR Part 251, Subpart C, and 5 U.S.C. 704. This permit does not constitute a contract for

purposes of the Contract Disputes Act, 41 U.S.C. 601. The permit is not real property, does not convey any interest in real property, and may not be used as collateral for a loan.

B. VALID OUTSTANDING RIGHTS. This permit is subject to all valid outstanding rights. Valid outstanding rights include those derived under mining and mineral leasing laws of the United States. The United States is not liable to the holder for the exercise of any such right.

C. ABSENCE OF THIRD-PARTY BENEFICIARY RIGHTS. The parties to this permit do not intend to confer any rights on any third party as a beneficiary under this permit.

D. SERVICES NOT PROVIDED. This permit does not provide for the furnishing of road or trail maintenance, water, fire protection, search and rescue, or any other such service by a government agency, utility, association, or individual.

E. RISK OF LOSS. The holder assumes all risk of loss associated with use or occupancy of the permit area, including but not limited to theft, vandalism, fire and any fire-fighting activities (including prescribed burns), avalanches, rising waters, winds, falling limbs or trees, and other forces of nature. If authorized temporary improvements in the permit area are destroyed or substantially damaged, the authorized officer shall conduct an analysis to determine whether the improvements can be safely occupied in the future and whether rebuilding should be allowed. If rebuilding is not allowed, the permit shall terminate.

F. DAMAGE TO UNITED STATES PROPERTY. The holder has an affirmative duty to protect from damage the land, property, and other interests of the United States. Damage includes but is not limited to fire suppression costs, damage to government-owned improvements covered by this permit, and all costs and damages associated with or resulting from the release or threatened release of a hazardous material occurring during or as a result of activities of the holder or the holder's heirs, assigns, agents, employees, contractors, or lessees on, or related to, the lands, property, and other interests covered by this permit. For purposes of clause IV.F and section V, "hazardous material" shall mean (a) any hazardous substance under section 101(14) of the Comprehensive Environmental Response, Compensation, and Liability Act (CERCLA), 42 U.S.C. § 9601(14); (b) any pollutant or contaminant under section 101(33) of CERCLA, 42 U.S.C. § 9601(33); (c) any petroleum product or its derivative, including fuel oil, and waste oils; and (d) any hazardous substance, extremely hazardous substance, toxic substance, hazardous waste, ignitable, reactive or corrosive materials, pollutant, contaminant, element, compound, mixture, solution or substance that may pose a present or potential hazard to human health or the environment under any applicable environmental laws.

1. The holder shall avoid damaging or contaminating the environment, including but not limited to the soil, vegetation (such as trees, shrubs, and grass), surface water, and groundwater, during the holder's use or occupancy of the permit area. If the environment or any government property covered by this permit becomes damaged during the holder's use or occupancy of the permit area, the holder shall immediately repair the damage or replace the damaged items to the satisfaction of the authorized officer and at no expense to the United States.

2. The holder shall be liable for all injury, loss, or damage, including fire suppression, prevention and control of the spread of invasive species, or other costs in connection with rehabilitation or restoration of natural resources associated with the use or occupancy authorized by this permit. Compensation shall include but not be limited to the value of resources damaged or destroyed, the costs of restoration, cleanup, or other mitigation, fire suppression or other types of abatement costs, and all administrative, legal (including attorney's fees), and other costs. Such costs may be deducted from a performance bond required under clause IV.I.

3. The holder shall be liable for damage caused by use of the holder or the holder's heirs, assigns, agents, employees, contractors, or lessees to all roads and trails of the United States to the same extent as provided under clause IV.F.1, except that liability shall not include reasonable and ordinary wear and tear

G. HEALTH, SAFETY, AND ENVIRONMENTAL PROTECTION. The holder shall promptly abate as completely as possible and in compliance with all applicable laws and regulations any activity or condition arising out of or relating to the authorized use or occupancy that causes or threatens to cause a hazard to public health or the safety of the holder's employees or agents or harm to the environment (including areas of vegetation or timber, fish or other wildlife populations, their habitats, or any other natural resources). The holder shall prevent impacts to the environment and cultural resources by implementing actions identified in the operating plan to prevent establishment and spread of invasive species. The holder shall immediately notify the authorized officer of all serious accidents that occur in connection with such activities. The responsibility to protect the health and safety of all persons affected by the use or occupancy authorized by this permit is solely that of the holder. The Forest Service has no duty under the terms of this permit to inspect the permit area or operations and activities of the holder for hazardous conditions or compliance with health and safety standards.

H. Subject only to the limits on the Lessee's liability under Title 24, Article 10, of the Colorado Governmental Immunity Act (CGIA), Colorado Revised Statutes (C.R.S.) §§ 24-10-101 through 24-10-119 (as amended), the holder shall indemnify, defend, and hold harmless the United States for any costs, damages, claims, liabilities, and judgments arising from past, present, and future acts or omissions of the holder in connection with the use and occupancy authorized by this permit. This indemnification and hold harmless provision includes but is not limited to acts and omissions of the holder or the holder's heirs, assigns, agents, employees, contractors, or lessees in connection with the use and occupancy authorized by this permit which result in (1) violations of any laws and regulations which are now or which may in the future become applicable, and including but not limited to those environmental laws listed in clause IV.F of this permit; (2) judgments, claims, demands, penalties, or fees assessed against the United States; (3) costs, expenses, and damages incurred by the United States; or (4) the release or threatened release of any solid waste, hazardous waste, hazardous substance, pollutant, contaminant, oil in any form, or petroleum product into the environment. This clause shall survive termination or revocation of this permit, regardless of cause.

I. Subject only to the limits on the holder's liability under Title 24, Article 10, of the CGIA, C.R.S. §§ 24-10-101 through 24-10-119 (as amended), the holder shall indemnify the United States for any damages arising out of the holder's use and occupancy authorized by this permit. The holder shall be liable for all injury, loss, or damage, including fire suppression, or other costs associated with rehabilitation or restoration of natural resources, associated with the holder's use and/or occupancy. Compensation shall include but is not limited to the value of resources damaged or destroyed, the costs of restoration, cleanup, or other mitigation, fire suppression or other types of abatement costs, and all administrative, legal (including attorney's fees), and other associated costs.

J. Clauses IV.H and IV.I shall not be interpreted to limit any of the holder's liability for, or prevent the United States from taking any action to address, injury, loss, damages, or costs associated with environmental contamination, injury to natural resources, or other cause of action that arises under other law, including the Resource Conservation and Recovery Act, as amended, 42 U.S.C. 6901 et seq., the Comprehensive Environmental Response, Compensation, and Liability Act, as amended, 42 U.S.C. 9601 et seq., and the Clean Water Act, as amended, 33 U.S.C. 1251 et seq., in connection with the holder's use and occupancy of Federal lands, or to diminish any independent obligation of the permittee to indemnify the United States with respect to the same.

K. The authorized officer has determined through a risk assessment that the potential liability of the United States for property damage and personal injury or death arising from the holder's use and occupancy authorized by this permit is $350,000 or less for an injury to one person in a single occurrence (per incident) or $990,000 or less for an injury to two or more persons in a single occurrence (in the aggregate). Pursuant to the CGIA, the holder shall provide self-insurance covering claims for personal injury or death up to $350,000 for an injury to one person in a single occurrence (per incident) or $990,000 for an injury to two or more persons in a single occurrence (in the aggregate) . The self-insurance documentation shall name the United States as a certificate holder. The coverage under the holder's self-insurance shall extend to property damage and personal injury or death arising from the holder's activities under the permit, including use and occupancy of National Forest System lands and the construction, maintenance, and operation of the structures, facilities, or equipment authorized by the permit.

1. If there is a conflict between this permit the certificate of insurance provided by the City of Boulder Risk Management ("the certificate"), and/or the City of Boulder Risk Management's insurance policy manuals ("insurance policy manuals"), the order of precedence among those documents shall be (1) this permit; (2) the certificate; and (3) the insurance policy manuals.

2. If a claim is submitted to the United States for property damage and personal injury or death arising from the holder's use or occupancy authorized by this permit, the Forest Service shall tender the defense of the claim to the respective representatives of the self-insurance. The holder understands that tort claims against the United States are governed by the Federal Tort Claims Act, which may result in the administrative denial of a claim. The holder further understands that in litigation the United States is represented by the United States Department of Justice (USDOJ) and agrees that representatives of the self-insurance will coordinate the defense with USDOJ, if a claim is litigated.

L. BONDING. The authorized officer may require the holder to furnish a surety bond or other security for any of the obligations imposed by the terms and conditions of this permit or any applicable law, regulation, or order.

V. RESOURCE PROTECTION

A. COMPLIANCE WITH ENVIRONMENTAL LAWS. The holder shall in connection with the use or occupancy authorized by this permit comply with all applicable federal, state, and local environmental laws and regulations, including but not limited to those established pursuant to the Resource Conservation and Recovery Act, as amended, 42 U.S.C. 6901 et seq., the Federal Water Pollution Control Act, as amended, 33 U.S.C. 1251 et seq., the Oil Pollution Act, as amended, 33 U.S.C. 2701 et seq., the Clean Air Act, as amended, 42 U.S.C. 7401 et seq., CERCLA, as amended, 42 U.S.C. 9601 et seq., the Toxic Substances Control Act, as amended, 15 U.S.C. 2601 et seq., the Federal Insecticide, Fungicide, and Rodenticide Act, as amended, 7 U.S.C. 136 et seq., and the Safe Drinking Water Act, as amended, 42 U.S.C. 300f et seq.

B. VANDALISM. The holder shall take reasonable measures to prevent and discourage vandalism and disorderly conduct and when necessary shall contact the appropriate law enforcement officer.

C. PESTICIDE USE. Pesticides may not be used outside of buildings to control undesirable woody and herbaceous vegetation (including aquatic plants), insects, rodents, fish, and other pests and weeds without prior written approval from the authorized officer. A request for approval of planned uses of pesticides shall be submitted annually by the holder on the due date established by the authorized officer. The report shall cover a 12-month period of planned use beginning 3 months after the reporting date. Information essential for review shall be provided in the form specified. Exceptions to this schedule may be allowed, subject to emergency request and approval, only when unexpected outbreaks of pests or weeds require control measures that were not anticipated at the time an annual report was submitted. Only those materials registered by the U.S. Environmental Protection Agency for the specific purpose planned shall be considered for use on National Forest System lands. Label instructions and all applicable laws and regulations shall be strictly followed in the application of pesticides and disposal of excess materials and containers.

D. ARCHAEOLOGICAL-PALEONTOLOGICAL DISCOVERIES. The holder shall immediately notify the authorized officer of all antiquities or other objects of historic or scientific interest, including but not limited to historic or prehistoric ruins, fossils, or artifacts discovered in connection with the use and occupancy authorized by this permit. The holder shall leave these discoveries intact and in place until directed otherwise by the authorized officer. Protective and mitigative measures specified by the authorized officer shall be the responsibility of the holder.

E. NATIVE AMERICAN GRAVES PROTECTION AND REPATRIATION. In accordance with 25 U.S.C. 3002(d) and 43 CFR 10.4, if the holder inadvertently discovers human remains, funerary objects, sacred objects, or objects of cultural patrimony on National Forest System lands, the holder shall immediately cease work in the area of the discovery and shall make a reasonable effort to protect and secure the items. The holder shall immediately notify the authorized officer by telephone of the discovery and shall follow up with written confirmation of the discovery. The activity that resulted in the inadvertent discovery may not resume until 30 days after the authorized officer certifies receipt of the written confirmation, if resumption of the activity is otherwise lawful, or at any time if a binding written agreement has been executed between the Forest Service and the affiliated Indian tribes that adopts a recovery plan for the human remains and objects.

F. PROTECTION OF HABITAT OF THREATENED, ENDANGERED, AND SENSITIVE SPECIES. The location of sites within the permit area needing special measures for protection of plants or animals listed as threatened or endangered under the Endangered Species Act (ESA) of 1973, 16 U.S.C. 1531 et seq., as amended, or identified as sensitive or otherwise requiring special protection by the Regional Forester under Forest Service Manual (FSM) 2670, pursuant to consultation conducted under section 7 of the ESA, may be shown on the ground or on a separate map. The map shall be attached to this permit as an appendix. The holder shall take any protective and mitigative measures specified by the authorized officer. If protective and mitigative measures prove inadequate, if other sites within the permit area containing threatened, endangered, or sensitive species or species otherwise requiring special protection are discovered, or if new species are listed as threatened or endangered under the ESA or identified as sensitive or otherwise requiring special protection by the Regional Forester under the FSM, the authorized officer may specify additional protective and mitigative measures. Discovery of these sites by the holder or the Forest Service shall be promptly reported to the other party.

G. CONSENT TO STORE HAZARDOUS MATERIALS. The holder shall not store any hazardous materials at the site without prior written approval from the authorized officer. This approval shall not be unreasonably withheld. If the authorized officer provides approval, this permit shall include, or in the case of approval provided after this permit is issued, shall be amended to include specific terms addressing the storage of hazardous materials, including the specific type of materials to be stored, the volume, the type of storage, and a spill plan. Such terms shall be proposed by the holder and are subject to approval by the authorized officer.

H. CLEANUP AND REMEDIATION

1. The holder shall immediately notify all appropriate response authorities, including the National Response Center and the authorized officer or the authorized officer's designated representative, of any oil discharge or of the release of a

hazardous material in the permit area in an amount greater than or equal to its reportable quantity, in accordance with 33 CFR Part 153, Subpart B, and 40 CFR Part 302. For the purposes of this requirement, "oil" is as defined by section 311(a)(1) of the Clean Water Act, 33 U.S.C. 1321(a)(1). The holder shall immediately notify the authorized officer or the authorized officer's designated representative of any release or threatened release of any hazardous material in or near the permit area which may be harmful to public health or welfare or which may adversely affect natural resources on federal lands.

2. Except with respect to any federally permitted release as that term is defined under Section 101(10) of CERCLA, 42 U.S.C. 9601(10), the holder shall clean up or otherwise remediate any release, threat of release, or discharge of hazardous materials that occurs either in the permit area or in connection with the holder's activities in the permit area, regardless of whether those activities are authorized under this permit. The holder shall perform cleanup or remediation immediately upon discovery of the release, threat of release, or discharge of hazardous materials. The holder shall perform the cleanup or remediation to the satisfaction of the authorized officer and at no expense to the United States. Upon revocation or termination of this permit, the holder shall deliver the site to the Forest Service free and clear of contamination.

I. CERTIFICATION UPON REVOCATION OR TERMINATION. If the holder uses or stores hazardous materials at the site, upon revocation or termination of this permit the holder shall provide the Forest Service with a report certified by a professional or professionals acceptable to the Forest Service that the permit area is uncontaminated by the presence of hazardous materials and that there has not been a release or discharge of hazardous materials upon the permit area, into surface water at or near the permit area, or into groundwater below the permit area during the term of the permit. This certification requirement may be waived by the authorized officer when the Forest Service determines that the risks posed by the hazardous material are minimal. If a release or discharge has occurred, the professional or professionals shall document and certify that the release or discharge has been fully remediated and that the permit area is in compliance with all federal, state, and local laws and regulations.

VI. LAND USE FEE AND ACCOUNTING ISSUES

A. LAND USE FEES. The holder shall pay an initial annual land use fee of $4,497.74 for the period from January 1, 2014 to December 31, 2014 , and thereafter on January 1, shall pay an annual land use fee of $4,497.74. The annual land use fee shall be adjusted annually using the applicable indexing factor.

B. MODIFICATION OF THE LAND USE FEE. The land use fee may be revised whenever necessary to reflect the market value of the authorized use or occupancy or when the fee system used to calculate the land use fee is modified or replaced.

C. FEE PAYMENT ISSUES.

1. Crediting of Payments. Payments shall be credited on the date received by the deposit facility, except that if a payment is received on a non-workday, the payment shall not be credited until the next workday.

2. Disputed Fees. Fees are due and payable by the due date. Disputed fees must be paid in full. Adjustments will be made if dictated by an administrative appeal decision, a court decision, or settlement terms.

3. Late Payments

(a) Interest. Pursuant to 31 U.S.C. 3717 et seq., interest shall be charged on any fee amount not paid within 30 days from the date it became due. The rate of interest assessed shall be the higher of the Prompt Payment Act rate or the rate of the current value of funds to the Treasury (i.e., the Treasury tax and loan account rate), as prescribed and published annually or quarterly by the Secretary of the Treasury in the Federal Register and the Treasury Fiscal Requirements Manual Bulletins. Interest on the principal shall accrue from the date the fee amount is due.

(b) Administrative Costs. If the account becomes delinquent, administrative costs to cover processing and handling the delinquency shall be assessed.

(c) Penalties. A penalty of 6% per annum shall be assessed on the total amount that is more than 90 days delinquent and shall accrue from the same date on which interest charges begin to accrue.

(d) Termination for Nonpayment. This permit shall terminate without the necessity of prior notice and opportunity to comply when any permit fee payment is 90 calendar days from the due date in arrears. The holder shall remain responsible for the delinquent fees.

4. Administrative Offset and Credit Reporting. Delinquent fees and other charges associated with the permit shall be subject to all rights and remedies afforded the United States pursuant to 31 U.S.C. 3711 et seq. and common law. Delinquencies are subject to any or all of the following:

(a) Administrative offset of payments due the holder from the Forest Service.

(b) If in excess of 60 days, referral to the Department of the Treasury for appropriate collection action as provided by 31 U.S.C. 3711(g)(1).

(c) Offset by the Secretary of the Treasury of any amount due the holder, as provided by 31 U.S.C. 3720 et seq.

(d) Disclosure to consumer or commercial credit reporting agencies.

VII. REVOCATION, SUSPENSION, AND TERMINATION

A. REVOCATION AND SUSPENSION. The authorized officer may revoke or suspend this permit in whole or in part:

1. For noncompliance with federal, state, or local law.

2. For noncompliance with the terms of this permit.

3. For abandonment or other failure of the holder to exercise the privileges granted.

4. With the consent of the holder.

5. For specific and compelling reasons in the public interest.

Prior to revocation or suspension, other than immediate suspension under clause VI.B, the authorized officer shall give the holder written notice of the grounds for revocation or suspension. In the case of revocation or suspension based on clause VII.A.1, 2, or 3, the authorized officer shall give the holder a reasonable time, typically not to exceed 90 days, to cure any noncompliance.

B. IMMEDIATE SUSPENSION. The authorized officer may immediately suspend this permit in whole or in part when necessary to protect public health or safety or the environment. The suspension decision shall be in writing. The holder may request an on-site review with the authorized officer's supervisor of the adverse conditions prompting the suspension. The authorized officer's supervisor shall grant this request within 48 hours. Following the on-site review, the authorized officer's supervisor shall promptly affirm, modify, or cancel the suspension.

C. APPEALS AND REMEDIES. Written decisions by the authorized officer relating to administration of this permit are subject to administrative appeal pursuant to 36 CFR Part 251, Subpart C, as amended. Revocation or suspension of this permit shall not give rise to any claim for damages by the holder against the Forest Service.

D. TERMINATION. This permit shall terminate when by its terms a fixed or agreed upon condition, event, or time occurs without any action by the authorized officer. Examples include but are not limited to expiration of the permit by its terms on a specified date and termination upon change of control of the business entity. Termination of this permit shall not require notice, a decision document, or any environmental analysis or other documentation. Termination of this permit is not subject to administrative appeal and shall not give rise to any claim for damages by the holder against the Forest Service.

E. RIGHTS AND RESPONSIBILITIES UPON REVOCATION OR TERMINATION WITHOUT RENEWAL. Upon revocation or termination of this permit without renewal of the authorized use, the holder shall remove all structures and improvements, except those owned by the United States, within a reasonable period prescribed by the authorized officer and shall restore the site to the satisfaction of the authorized officer. If the holder fails to remove all structures and improvements within the prescribed period, they shall become the property of the United States and may be sold, destroyed, or otherwise disposed of without any liability to the United States. However, the holder shall remain liable for all costs associated with their removal, including costs of sale and impoundment, cleanup, and restoration of the site.

VIII. MISCELLANEOUS PROVISIONS

A. MEMBERS OF CONGRESS. No member of or delegate to Congress or resident commissioner shall benefit from this

permit either directly or indirectly, except to the extent the authorized use provides a general benefit to a corporation.

B. CURRENT ADDRESSES. The holder and the Forest Service shall keep each other informed of current mailing addresses, including those necessary for billing and payment of land use fees.

C. SUPERSEDED PERMIT. This permit supersedes a special use permit issued to Public Service Company of Colorado, designated as BOU41111-16, dated August 14, 1980.

D. SUPERIOR CLAUSES. If there is a conflict between any of the preceding printed clauses and any of the following clauses, the preceding printed clauses shall control.

E. DAMAGE TO UNITED STATES PROPERTY. The holder/lessee has an affirmative duty to protect from damage the land, property, and other interests of the United States. Damage includes but is not limited to fire suppression costs, and all costs and damages associated with or resulting from the release or threatened release of a hazardous material occurring during or as a result of activities of the holder/lessee or the holder ′s/lessee ′s heirs, assigns, agents, employees, contractors, or lessees on, or related to, the lands, property, and other interests covered by this permit/lease. For purposes of clauses IV.G and section V, "hazardous material" shall mean (a) any hazardous substance under section 101(14) of the Comprehensive Environmental Response, Compensation, and Liability Act (CERCLA), 42 U.S.C. § 9601(14); (b) any pollutant or contaminant under section 101(33) of CERCLA, 42 U.S.C. § 9601(33); (c) any petroleum product or its derivative, including fuel oil, and waste oils; and (d) any hazardous substance, extremely hazardous substance, toxic substance, hazardous waste, ignitable, reactive or corrosive materials, pollutant, contaminant, element, compound, mixture, solution or substance that may pose a present or potential hazard to human health or the environment under any applicable environmental laws.

1. The holder/lessee shall avoid damaging or contaminating the environment, including but not limited to the soil, vegetation (such as trees, shrubs, and grass), surface water, and groundwater, during the holder ′s/lessee ′s use and occupancy of the permit/lease area. If the environment or any government property covered by this permit/lease becomes damaged during the holder ′s/lessee ′s use and occupancy of the permit/lease area, the holder/lessee shall immediately repair the damage or replace the damaged items to the satisfaction of the authorized officer and at no expense to the United States.

2. Subject only to the limits on the holder ′s/lessee ′s liability under the State Tort Claims Act, the holder/lessee shall be liable for all injury, loss, or damage, including fire suppression or other costs associated with rehabilitation or restoration of natural resources, associated with the holder's use and occupancy of the permit/lease area. Compensation shall include but is not limited to the value of resources damaged or destroyed, the costs of restoration, cleanup, or other mitigation, fire suppression or other types of abatement costs, and all associated administrative, legal (including attorney's fees), and other costs. Such costs may be deducted from a performance bond required under clause IV.L.

3. The holder/lessee shall be liable for damage caused by use of the holder/lessee or the holder ′s/lessee ′s heirs, assigns, agents, employees, contractors, or lessees to all roads and trails of the United States that are open to public use to the same extent as provided under clause IV.G.1, except that liability shall not include reasonable and ordinary wear and tear.

F. WATER FACILITIES AND WATER RIGHTS. This permit does not confer any water rights on the holder. Any necessary water rights must be acquired by the holder in accordance with State law. Any expenses for acquiring water rights shall be the responsibility of the holder. The United States reserves the right to place any conditions on installation, operation, maintenance, and removal of facilities to pump, divert, store, or convey water on National Forest System lands covered by this permit that are necessary to protect public property, public safety, and natural resources on National Forest System lands in compliance with applicable law. The holder waives any claims against the United States for compensation in connection with imposition of any conditions on installation, operation, maintenance, and removal of water facilities under this permit.

G. Signs (X29). Signs or advertising devices erected on National Forest System lands shall have prior approval by the Forest Service as to location, design, size, color, and message. Erected signs shall be maintained or renewed as necessary to neat and presentable standards, as determined by the Forest Service.

H. Improvement Relocation (X33). This authorization is granted with the express understanding that should future location of United States Government-owned improvements or road rights-of-way require the relocation of the holder's improvements, such relocation will be done by, and at the expense of, the holder within a reasonable time as specified by the authorized officer.

This permit is accepted subject to the conditions set out above.

CITY OF BOULDER

_____
City Manager

ATTEST:

_____
City Clerk

APPROVED AS TO FORM:

_____
City Attorney's Office

U. S. DEPARTMENT OF AGRICULTURE
Forest Service

By: _____
(Authorized Officer Signature)

Ron Archuleta, Acting Forest Supervisor
(Name and Title)

Date: _____

According to the Paperwork Reduction Act of 1995, an agency may not conduct or sponsor, and a person is not required to respond, to a collection of information unless it displays a valid OMB control number. The valid OMB control number for this information collection is 0596-0082. The time required to complete this information collection is estimated to average 1 hour per response, including the time for reviewing instructions, searching existing data sources, gathering and maintaining the data needed, and completing and reviewing the collection of information.

The U.S. Department of Agriculture (USDA) prohibits discrimination in all its programs and activities on the basis of race, color, national origin, age, disability, and, where applicable, sex, marital status, familial status, parental status, religion, sexual orientation, genetic information, political beliefs, reprisal, or because all or part of an individual's income is derived from any public assistance. (Not all prohibited bases apply to all programs.) Persons with disabilities who require alternative means for communication of program information (Braille, large print, audiotape, etc.) should contact USDA's TARGET Center at 202-720-2600 (voice and TDD).

To file a complaint of discrimination, write USDA, Director, Office of Civil Rights, 1400 Independence Avenue, SW, Washington, DC 20250-9410 or call toll free (866) 632-9992 (voice). TDD users can contact USDA through local relay or the Federal relay at (800) 877-8339 (TDD) or (866) 377-8642 (relay voice). USDA is an equal opportunity provider and employer.

The Privacy Act of 1974 (5 U.S.C. 552a) and the Freedom of Information Act (5 U.S.C. 552) govern the confidentiality to be provided for information received by the Forest Service.

ARAPAHO AND ROOSEVELT NATIONAL FORESTS AND PAWNEE NATIONAL GRASSLAND NOXIOUS WEED MANAGEMENT PLAN

April, 2003

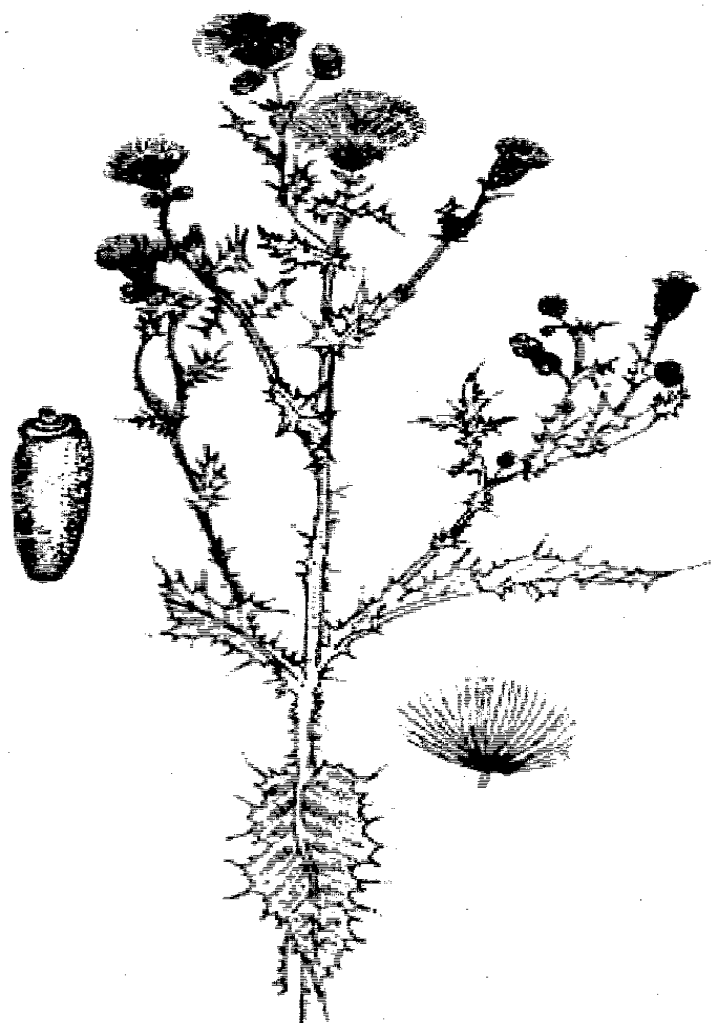

CHAPTER 1 3
GOALS AND OBJECTIVES 3
I. GOALS 3
II. OBJECTIVES 3
CHAPTER 2 5
INTEGRATED WEED MANAGEMENT PROCESS 5
I. AWARENESS 5
II. PREVENTION 6
III. INVENTORY 8
IV. TREATMENT 8
A. Treatment Methods 9
B. Treatment Strategies 12
V. MONITORING 16
VI. REPORTING 18
VII. COORDINATION 19
CHAPTER 3 20
Checklist for Annual Review of Noxious Weed Treatment Projects 21
CHAPTER 4 22
PRIORITY SPECIES DESCRIPTIONS, PREFERRED TREATMENTS 22
CHAPTER 5 35
PROCEDURES FOR MIXING, LOADING, AND DISPOSAL OF CHEMICALS 35
CHAPTER 6 37
SPILL PLAN 37
CHAPTER 7 41
PUBLIC NOTIFICATION AND COMMUNICATION 41
I. INTRODUCTION 41
II. GOALS 41
III. ACTION PLAN 42
CHAPTER 8 44
LITERATURE CITED 44

CHAPTER 1

GOALS AND OBJECTIVES

The Arapaho and Roosevelt National Forests and Pawnee National Grassland Noxious Weed Management Plan (Noxious Weed Management Plan) will be implemented as feasible within annual budget and workforce constraints. This plan tiers to the Land and Resource Management Plan for the Arapaho and Roosevelt National Forests and Pawnee National Grassland (Forest Plan). This Noxious Weed Management Plan implements the Arapaho and Roosevelt National Forest and Pawnee National Grassland Noxious Weed Decision Notice and facilitates achievement of Goal 128 and adherence to Standards 129, 130, and 131, and Guideline 132 in the Forest Plan, which provide guidance for noxious weed management on the Forests and Grassland.

I. GOALS

The overall goals of this noxious weed management plan are:

A. To prevent the occurrence and spread of potential new invaders and new infestations and the spread of established infestations.

B. To implement an Integrated Weed Management (IWM) process for planning, inventory, treatment, monitoring, and reporting of noxious weeds so that new invaders and infestations are controlled (seed production is prevented) , reduced, and eradicated, and established infestations are managed under an appropriate IWM strategy.

C. To raise internal Forest Service (FS) and public awareness about the threat of noxious weeds.

D. To provide for full public involvement in the process.

II. OBJECTIVES

A. Conduct a programmatic standardized inventory of noxious weed infestations. Ensure that this inventory is complete and includes site, weed, and ecological relationship data leading to sound IWM decision-making. Update the inventory as needed with new inventory and monitoring data. All data will be recorded in a Geographical Information System (GIS) database. The data will be used in developing prevention and treatment strategies for all resource activities.

B. Expansion of noxious weeds is a dynamic process. Existing infestations of weeds can continue to spread and new infestations can become established. Implement a timely, adaptive, and integrated approach to reduce the spread of noxious weeds.

C. Develop and implement a noxious weed education and awareness program for the Arapaho and Roosevelt National Forests and Pawnee National Grasslands (Forests and Grassland).

D. Develop prevention strategies and measures for use in all projects that could cause spread of noxious weeds. Include education and awareness.

E. Treat areas of new and established infestations, using a combination of methods. Acres treated will be based on ecosystem needs, Forest Plan goals, and information from new inventories, new infestations, and cooperative projects with landowners, the State of Colorado, counties, and cities.

F. Manage noxious weeds to detect invaders and apply an early treatment strategy to control seed production. Apply prevention, correction, maintenance, or non-treatment strategies as appropriate to properly manage established infestations.

G. Cooperate and share data with city, county, state, and other federal agencies and local communities to ensure early detection of potential invaders, to prevent spread of potential invaders, and to cooperate in treatment of established infestations that cross jurisdictional boundaries.

H. Ensure continued full public involvement with the noxious weed program through cooperation and continued notification of noxious weed treatments.

I. Implement monitoring, evaluation, and reporting programs to track prevention and treatment activities and to determine the effectiveness of such practices.

CHAPTER 2

INTEGRATED WEED MANAGEMENT PROCESS

Direction for weed management is found in Forest Service Manual (FSM) 2080; Stemming the Invasive Tide: Forest Service Strategy for Noxious and Nonnative Invasive Plant Management" (USDA Forest Service, 1998); Federal Noxious Weed Act of 1974; Executive Order 13112; and the National Invasive Species Management Plan (National Invasive Species Council ,2001). The IWM process outlined in this plan is consistent with all of these strategies. This IWM process is the guidance for implementation of Noxious Weed Management on the Forests and Grassland.

Invader sites and new infestations of priority species will be inventoried and brought under early treatment strategies, including containment (prevention of off site movement), control and eradication, as rapidly as possible. Seasonal monitoring and annual evaluation will be initiated. Established infestations will be inventoried and managed under correction, maintenance, and non-treatment strategies as outlined under Section IV below, based on objectives, priorities, and funding.

I. AWARENESS

Awareness is key to preventing the introduction and spread of noxious weeds, by informing FS employees, permittees, contractors, partners, and the public of the potential impacts and threat of noxious weeds. The following practices will be implemented to increase awareness:

A. Develop a Forests and Grassland training program to assist project level personnel in weed identification and in implementation of this plan. Emphasize noxious weed identification training for employees involved in ground-disturbing projects.

B. Provide information to grazing permittees regarding noxious weed identification, methods of spread, and prevention measures.

C. For other permittees, for example outfitter-guides, discuss the noxious weed problem with permittees and their employees. Provide information such as weed postcards to increase their awareness and cooperation and allow them to inform their clients.

D. For recreational and other livestock use not required to be under a permit, ensure that FS employees are informed about FS certified weed-free forage regulations so they may inform users and enforce the regulations as appropriate.

E. For recreational and other forests and grassland users, develop an informational package to:

1.Explain the noxious weed prevention program,

2. Provide information on the use of certified weed-free and pelletized feeds, certified weed-free forage regulations and

3. Inform and involve the public in the detection and treatment of noxious weeds.

F. Include noxious weed information in visitor information displays, Internet home pages, and visitor maps as opportunities arise.

G. As funding and staffing are available, participate in community awareness activities such as Weed Awareness Week, Celebrating Wildflower Week, and regional and local events that provide opportunities to increase public awareness about noxious weeds.

II. PREVENTION

A. Utilize the USDA, Forest Service Guide to Noxious Weed Prevention Practices to reduce the risk of noxious weed spread.

B. In addition to the guidance in Section II A:

1. Project Planning

The following prevention strategies and measures will be incorporated into project planning documents, including NEPA documentation, and into site plans, contracts, and permits, as appropriate:

a. Stand examinations, botanical inventories, range analyses, and other resource inventories as appropriate will include a process for inventorying noxious weed occurrence by stand, species, size of infestation, and location as a minimum. Noxious weed inventory protocol, including a list of weed species to be inventoried, is currently being developed for stand exams for Region 2, and will be incorporated into stand exams and other resource inventories.
b. Using the Noxious Weed Risk Assessment form from Appendix B of the Rangeland Analysis and Management Training Guide (USDA Forest Service, 1996), risk should be evaluated during initial or periodic project planning and coordinated with the District noxious weed coordinator. Where monitoring is needed, it should be planned to continue for at least five years on a scheduled basis.

2. Revegetation Policy for the Forests And Grassland

Utilize the Arapaho and Roosevelt National Forests and Pawnee National Grassland Revegetation policy (USDA Forest Service, 2001) for all projects involving revegetation.

3. Certified Weed-Free Hay and Straw Requirement

Rocky Mountain Region Order No. 02-97-01 requires hay, straw, mulch, or forage on National Forest and Grassland system land within Colorado to be certified noxious weed free. Implement it in the following and other applicable situations:

a. Insure that any hay, straw, or mulch used for mulching, erosion control, rehabilitation, or other uses, by Forest Service personnel, permittees, or contractors, complies with Order No. 02-97-01. Where applicable, include the Order as a contract or permit requirement.

b. Include Order No. 02-97-01 as a permit requirement for recreational livestock use authorized under permit, such as outfitter-guides.

c. Include Order No. 02-97-01 as a permit requirement for livestock grazing permits.

4. In Allotment Management Plans and Annual Operating Instructions

a. Consider the potential for introduction of noxious weed seeds through animal transport. Where livestock are entering Forests and Grassland allotment from a known noxious weed infested area, consider requiring the permittee, at his or her expense, to feed the animals weed free hay or other weed free forage or feeds for 1 to 3 days prior to permitting ingress onto the general area of the allotment. The feeding area will, if at all possible, be on non-National Forest or Grassland System lands. If this is not practical, confine the animals in as small a pasture as feasible for the 1 to 3 day period. This pasture will then require annual monitoring for the occurrence of noxious weeds and management as appropriate.

b. To the extent possible, provide for the use of livestock as a tool in preventing palatable noxious weeds from setting seed, and/or aiding in removal or as part of a comprehensive strategy.

c. Provide a map showing noxious weed infestations on each allotment. To the extent possible, after seed ripe stage, have livestock avoid sites where seeds are likely to be transported by the livestock (i.e., either through ingestion and excretion or through attachment to the animal and then dropping off).

d. Cooperate, as appropriate, with permittees in treatment of noxious weeds on non-federal lands to prevent transport of seeds, etc. onto National Forest or Grassland System lands.

5. Gas, and Oil Operating Plans

Review gas and oil Operating Plans to ensure that proper actions are taken to prevent the establishment of new infestations or the spread of existing ones.

Ensure that disturbed sites are rehabilitated and revegetated as soon after disturbance as possible. Consider the use of annual cover crops where an area will be left in a disturbed condition for a period of time prior to being re-worked.

6. Coordination with adjacent landowners

Coordinate with adjacent landowners to ensure that animals or equipment moving from the adjacent lands onto the Forests or Grassland are either moving from weed free areas or are treated or quarantined as appropriate. Encourage coordinated policies between adjacent lands.

III. INVENTORY

A. The Forest Noxious Weed Management team will initiate a process to conduct surveys for noxious weeds. The process will include high priority surveys for invaders and unrecorded infestations of priority species on all road corridors, major spur roads, and all high use or disturbed areas such as campgrounds, trailheads, and quarry pits.

All noxious weed survey data will be mapped on 1:24,000 scale USGS maps in a format compatible with GIS. Information will be mapped in a code format using the alpha-numeric codes from the Natural Resource Conservation Service's PLANTS database. Consistent with FSM 2080 direction, inventory procedures will conform to provisions of “Inventory and Monitoring Protocols for Rangeland Management” (NRIS / Terra database requirements). Data will be recorded on appropriate forms to achieve this direction. Inventory personnel will be instructed on appropriate immediate treatments to implement for invaders and new infestations encountered during inventory.

Noxious weed inventory data will be kept and maintained in the appropriate databases (eg. NRIS /Terra).

B. Each project leader conducting any form of resource inventory should coordinate with the District Weed Coordinator to determine if the inventory procedures should provide for identifying noxious weed presence by species, location, size, and person to contact. Information collected will be provided to the District Noxious Weed Coordinator as soon as possible. The District Coordinator will provide the information to the Forest Noxious Weed Management Team. The team will prioritize the site for noxious weed inventory and possible control.

C. Forms and maps documenting noxious weed infestation sites will be on file at the Ranger District offices. Copies will be provided to the appropriate database steward.

IV. TREATMENT

Expansion of noxious weeds is a dynamic process. Existing infestations of weeds can continue to spread and new infestations can become established. Reducing the spread

of noxious weeds requires a timely, adaptive, and integrated approach. Due to the dynamics of noxious weeds, treatment areas and approaches vary from year to year. To ensure that these variations are consistent with the purpose of this project an interdisciplinary team (IDT) will review planned treatments annually. The purpose of this review will be to ensure that treatments meet the purpose of this project, the Forest Plan, as well as laws and regulations. This process will (1) consider individual noxious weed populations and their effects on resources and economics, (2) review treatment methods for efficacy in controlling specific noxious weed populations, (3) review potential effects to the environment associated with specific treatment plans to ensure consistency with the EA, and (4) review potential effects on human health and welfare associated with treatment plans. For example, the IDT will review that any chemicals used in treatments are the most effective for the intended purpose and that they are listed and analyzed in a USDA Risk Assessment. To aid in the annual review, a checklist of items to consider during the annual review in provided in Chapter 3 of the Noxious Weed Management Plan. If this review determines that a treatment or effect is outside the scope of this plan, then appropriate National Environmental Policy Act (NEPA) analysis and documentation will be necessary.

Prior to any treatment in habitats where proposed, endangered, threatened, or sensitive (PETS) plant species are likely to occur, surveys must be conducted at the time when the PETS plants are reliably identifiable (see species descriptions in BA/BE for phenology), to determine presence or absence of these species in the project area. Assure all weed inventory and treatment crews are able to identify all PETS plant species known or suspected to occur within the project area.

As a part of all noxious weed control projects, assess re-vegetation needs, including monitoring. Re-vegetate sites if necessary, following the Arapaho and Roosevelt National Forests and Pawnee National Grassland Re-vegetation Policy. Re-establish vegetation on all bare ground sites resulting from noxious weed treatment to minimize opportunity for noxious weed invasion and establishment. If seeding is utilized, seed all bare sites as soon as possible and at a time of year when it is likely to be successful, unless ongoing disturbance at the site will prevent noxious plant establishment.

If any proposed, endangered, or threatened plant or animal species are identified during project surveys, limit control options to those, which will not adversely affect those species.

When implementing control techniques, avoid damage to non-target species to the extent practicable while achieving adequate control of target species.

A. Treatment Methods

Manual or mechanical

Manual techniques involve the use of tools such as shovels, axes, rakes, grubbing hoes, and hand clippers to expose, cut, and remove flowers, fruits, stems, leaves, and/or roots from target plants. Hand grubbing (uprooting individual plants by

hand) is another technique used where soil disturbance must be held to a minimum. Manual treatments can be far more species-selective and can be used in sensitive habitats where herbicides would not be appropriate or in areas not accessible to ground vehicles.

Mowing to cut herbaceous vegetation above the ground surface is the primary mechanical technique used under this method. Tillage for noxious weed control generally involves plowing, sweeping, or disking of a site to kill and incorporate existing vegetation in preparation of a seedbed. Plowing (moldboard or chisel) turns the soil and vegetation over, thus exposing roots, killing the vegetation, and incorporating the above ground biomass into the top layer of the soil profile. Disking (tandem or one-way) further pulverizes the soil in preparation for seeding. Sweeping (with or without rod-weeders) cuts roots at a certain depth without turning the soil over. This nonselective technique will be used when complete plant removal or thinning is desired in conjunction with a seeding operation. Sweeping has the advantage of leaving considerable mulch at or near the soil surface, which encourages the growth of newly planted seeds. The best mechanical method for treating noxious weeds will depend on (1) characteristics of the noxious weed species present -- for example, density, stem size, and sprouting ability; (2) need for seedbed preparation and re-vegetation; (3) topography and terrain; (4) soil characteristics -- for example, type, depth, amount and size of rocks, erosiveness, and susceptibility to compaction; and (5) climatic conditions

Conduct a pre-treatment cultural resource survey on all sites identified for ground disturbing treatments (e.g. grubbing, digging, tillage, or grazing).

Avoid tillage in occupied prairie dog colonies. This mitigation and associated analysis should be reconsidered if noxious weeds become a threat to prairie dog colonies.

Do not use mechanical treatments (mowing, disking, plowing, sweeping) in Preble's meadow jumping mouse habitat.

Do not use tillage as a treatment method in alpine habitats.

Biological treatments

Biological noxious weed control programs employ living organisms to selectively suppress noxious weed populations. Primary techniques include controlled foraging by herbivorous animals (e.g. sheep or goats) and introduction of host-specific pathogens or insects.

Grazing can aid in control of noxious weeds through removal of herbaceous vegetation. Also by timing grazing to correspond to the peak palatability of a noxious weed species, or peak vulnerability of a species, effects on surrounding vegetation can be minimized. In addition, depending on the species and the site conditions, grazing can be used to remove decadent above-ground biomass and noxious weed litter. This can temporarily decrease soil surface moisture and open

the canopy which may be favorable for native species competition and regeneration.

Insects, pathogens, or a combination of the two may be released in an area infested by noxious weeds to selectively feed on or infect target plants. Introduced insects and or pathogens can weaken the target species directly by attacking vital plant parts (e.g. roots, seeds, and leaves) or indirectly by creating an environment that reduces the species' competitive advantage. The insects to be introduced must be approved and recommended for use by the USDA Animal and Plant Health Inspection Service and must be (1) highly damaging to the target species; (2) highly specific to the target species, (3) able to survive in the target species' habitat, (4) free of natural parasites, and (5) susceptible to no parasites existing in the target species' habitat. Insects and pathogens imported from the native lands of noxious weeds species, and tested and approved for use in the United States, may be released in appropriate areas.

Biological agents should not be used for target species that are in the same genus as sensitive species. If the target species is in the same family, evaluate the specificity of the agent with regard to morphology, physiology or other factors.

Any proposed inoculation of noxious weeds with larval stage insects will require additional analysis.

Herbicide treatments

Chemical treatment methods employ herbicides to control noxious weeds. All applications of herbicides will adhere to **required and recommended** restrictions on herbicide labels. A communication plan will be implemented to provide for notification of treatment activities.

Herbicides will be applied from ground vehicles (e.g. trucks, ATVs, and tractors), backpack equipment, and livestock pack equipment. Target species will be spot treated where this method is practical and effective. Ground vehicles, backpack applicators, and horse-pack applicators will be equipped with hand-held spraying equipment (e.g. wands and spray guns) for spot treatment. Additional items in backpack and horse-pack equipment may include drip and wick applicators, whirling disk applicators. Dry formulations may be applied with mechanical broadcast equipment, or by hand. Truck mounted boom sprayers or broadcast spreaders will be used only where target vegetation is dense enough and infestation size large enough (usually > 1 acre) to warrant such methods.

Herbicides utilized in this management plan include those registered by the EPA for forestry, right-or-way and rangeland uses. Specific chemicals will be selected for each treatment area based on efficacy of control for the target species, relative risks to non-target species (plant and animal), and human safety. Any chemical used for treatment under the proposed action will be covered in the Risk Assessment for Herbicide Use in Forest Service Regions 1,2,3,4 and 10 and on Bonneville Power Administration Sites, September 1992, USDA, Forest Service

(FS 1992 Risk Assessment) or other more current USDA risk assessments as they become available.

Herbicide use within Preble's meadow jumping mouse habitat will follow the conditions for herbicide use in the Amended Special Regulations for the Preble's Meadow Jumping Mouse (Federal Register, Vol. 67, No. 190, October 1, 2002)

In the event of a herbicide spill, follow the emergency spill plan outlined in the Spill Plan, Chapter Six. Insure that all workers, including contractors, have the appropriate knowledge and equipment to carry out the plan, and have a copy of the spill plan in transport vehicles.

B. Treatment Strategies

There are four treatment strategies to choose from: *Early Treatment, Correction, Maintenance, and No Treatment.*

1. *Early Treatment Strategy*

The Early Treatment strategy applies to invaders and new or small infestations of priority species. This strategy normally would not apply to large established infestations. Biological control in most cases will not be part of an early treatment strategy because it is usually not an effective treatment for small infestations.

a. Invaders and New Infestations

For the purposes of this plan "Invaders" are defined as weed species which may not be present or are not yet widespread or causing great economic impact, and which should be contained and eradicated before they proliferate and significantly impact economic and environmental values.

The Forests and Grassland Forest Plan gives high priority to the treatment of invaders. Where such species are found, action takes place before resource damage occurs and large correction measures are needed. <u>The action threshold is low (one plant), to minimize cost and negative long-term impacts.</u>

The Forests and Grassland invaders list below corresponds to Colorado Noxious Weed List "C" with locally important species, all included on the overall State Noxious Weed list, added (indicated by "*"):

<u>INVADER'S LIST</u>

1. Absinth wormwood *(Artemisia absinthium)*
2. African rue (*Peganum harmala*)
3. Bouncingbet (*Saponaria officinalis*)
4. * Bull thistle *(Cirsium vulgare)*
5. Camelthorn (*Alhagi pseudalhagi*)

6. * Chicory *(Cichorium intybus)*
7. Coast tarweed (*Madia sativa*)
8. Common crupina *(Crupina vulgaris)*
9. * Common St. Johnswort (*Hypericum perforatum*)
10. Common teasel (*Dipsacus fullonum*)
11. Cypress spurge (*Euphorbia cyparissias*)
12. * Dame's Rocket (*Hesperis matronalis*)
13. Dyer's woad (*Isatis tinctoria*)
14. Eurasian watermilfoil *(Myriophyllum spicatum)*
15. * Flixweed, pinnate tansymustard (*Descurainia sophia*)
16. Giant salvinia *(Aalvinia molesta)*
17. * Hoary cress, whitetop (*Cardaria draba*)
18. * Houndstongue (*Cynoglossum officinale*)
19. Hydrilla *(Hydrilla hydrilla)*
20. Meadow knapweed *(Centaurea pratensis)*
21. Mediterranean sage *(Salvia aethiopis)*
22. Medusahead rye *(Taeniatherum caput-medusae)*
23. Moth mullein *(Verbascum blattaria)*
24. Myrtle spurge (*Euphorbia myrsinites*)
25. Orange hawkweed *(Hieracium aurantiacum)*
26. * Perennial pepperweed *(Lepidium latifolium)*
27. Rush skeletonweed (*Chondrilla juncea*)
28. * Saltcedar, tamarisk (*Tamarix parviflora, T. ramosissima*)
29. * Scentless chamomile (*Anthemis arvensis*)
30. * Scotch thistle *(Onopordum acanthium and O. tauricum)*
31. Sericea lespedeza *(Lespedeza cuneata)*
32. Spurred anoda *(Anoda cristata)*
33. Squarrose knapweed (*Centaurea virgata*)
34. Sulfur cinquefoil (*Potentilla recta*)
35. Tansy ragwort *(Senecio jacobaea)*
36. Venice mallow *(Hibiscus trionum)*
37. Yellow starthistle (*Centaurea solstitialis*)
38. Field bindweed (*Convolvulus arvensis*)
39. Russian olive (*Elaeagnus angustifolia*)
40. Jointed goatgrass, (*Aegilops cylindrical*)

Under this plan, the Invaders list also includes new or small and isolated infestations of the Forests and Grassland top twelve priority species, listed under Section IV. B. 2. a., "Established Infestations Definition and Priority Species List"**.**

The Invader list will be updated annually by discussing potential invaders at the annual coordination meetings with the County Weed Boards, and through sharing of information with cooperators. The Forest Noxious Weed Management Team will review the list annually and revise it as necessary.

b. Strategy Objectives

1. Containment and Control

During the containment and control phase, treatments and methods will be based on continued prevention of all seed production (100% control) and containment to the existing site. Effective early treatment strategies combine control methods. All methods approved under this plan may be used. However, emphasis will be placed on those methods, which will meet the stated objectives but will have the lowest potential for negatively impacting other resources or values.

2. Containment and Reduction

During the containment and reduction phase, action will be based on continued prevention of all seed production, containment, and reduction of population size on the existing site. The long-term objective is to reduce the population size to zero plants. Effective early treatment strategies combine control methods. All methods approved under this plan may be used. However, emphasis will be placed on those methods, which will meet the stated objectives but will have the lowest potential for negatively impacting other resources or values.

3. Monitoring

Where targeted noxious weeds are absent from a previously treated site, monitoring of the site will continue until the specific noxious weed is declared eradicated (i.e. no noxious weed reoccurrence in 2 years / also see item 4. Eradication below). If new individuals of the target species are found on the site, action appropriate to containment and reduction objectives will resume.

4. Eradication

Eradication requires continued monitoring of the site for a period of time determined by seed longevity and the last date seed production occurred.

2. *Correction, Maintenance, and No Treatment Strategies*

These strategies are for use on established infestations. The strategy used usually depends on the species and the site location.

a. Established Infestations Definition and Priority Species List

Established infestations are noxious weed species whose population levels and distribution are such that all seed production cannot be prevented on the Forest, District, or defined geographical area.

The top twelve priority species, (order does not imply priority within this list nor are treatments limited to these species), with established infestations on the Forests and Grassland are:

PRIORITY LIST

1. Downy brome, cheatgrass *(Bromus tectorum)*
2. Diffuse knapweed *(Centaurea diffusa)*
3. Russian knapweed *(Acroptilon repens)*
4. Spotted knapweed *(Centaurea maculosa)*
5. Leafy spurge *(Euphorbia esula)*
6. Canada thistle *(Cirsium arvense)*
7. Musk thistle *(Carduus nutans*
8. Dalmatian toadflax *(Linaria dalmatica)*
9. Yellow toadflax *(Linaria vulgaris)*
10. Chinese clematis (*Clematis orientalis*)
11. Black henbane (*Hyoscyamus niger*)
12. Oxeye daisy (*Chrysanthemum leucanthemum*)

This list overlaps the Colorado Noxious Weed List "B" (copy on file in the Project Record), defined as the most widespread and causing the greatest economic impact, with appropriate modifications for the Forests and Grassland. All species are included on the overall State Noxious Weed List (“A).

The priority list will be updated and changed annually at the annual coordination meetings with county weed managers, and through sharing of information with cooperators. The Forest Noxious Weed Management Team will review the list annually and revise it as necessary.

b. Strategy Definitions and Objectives

Correction Strategy is a combination of direct and indirect methods used to achieve the established objectives of control, containment, and reduction on established populations. For a *Correction Strategy,* the objectives initially will be to control (prevent seed production), contain (prevent off site movement) and monitor. Additional objectives will be defined based on site-specific conditions and on management objectives for the area. Long-term objectives will likely include containment and reduction of the infestation. Eradication will be an objective where feasible, but may not be appropriate for some established infestations.

Maintenance Strategy supports the current conditions on the site. However, actions such as hand pulling, mowing or biological controls may be used for the purpose of containing the weed to the site and preventing an increase in the infestation size. For a *Maintenance Strategy,* the objectives are to maintain the current condition of the infestation site and appropriate site monitoring. In maintenance situations, suppression tactics such as release of biological control agents or mowing are often appropriate.

No Treatment Strategy means that no treatments will be done on the site that will interfere with natural processes. However, site monitoring should occur to determine if conditions change that would require establishment of different objectives and implementation of a different strategy. For a *No Treatment Strategy,* the objective is to monitor to determine if or when conditions change on the site, which would require establishment of different objectives and implementation of a different strategy.

V. MONITORING

A. Monitoring Purpose

1. Determine the effectiveness of treatment practices, including prevention strategies, in meeting established objectives.

2. Determine the effectiveness of the management actions in adhering to USDA and Forest Service Policy on noxious weeds.

B. Monitoring Requirements

Whenever possible the following site-specific post-treatment information will be collected to aid future project planning:

1. An estimate of the degree of success and cost of the project (direct and indirect).
2. Assessment of the short- and long-term effects on vegetation including unintended effects.
3. Lessons learned that could be applied to other projects.
4. The identification of missing information that could determine the efficacy

of a treatment and how this information can be obtained.

5. Description of the treatment methods. If an herbicide was used, record its exact identity, formulation, manufacturer, mixture, and method of application, and any direct or indirect effects observed such as dead organisms or obvious water body contamination.
6. The names of each person who worked on the project, their assignment, training received, and dates of actual work.
7. Exposure incidents, accidents, and worker health complaints and residual analysis when appropriate.

C. Monitoring Action Plan

1. Monitoring of Inventoried Noxious Weed Sites

a. Consistent with FSM 2080 direction, monitoring procedures will conform to provisions of "Inventory and Monitoring Protocols for Rangeland Management" (NRIS / Terra database requirements). This initial site inventory will be the basis from which all future monitoring is built. For this reason, it is critical that it be completed at the appropriate time of year to ensure proper species identification and assessment of population size in detail and with as much accuracy as possible.

b. Record treatments on forms agreed to by the District and Forest Weed Coordinators. This form provides a long-term record of treatments, effects, and effectiveness for each site.

c. The Districts are responsible for monitoring and evaluation. A selection of noxious weed sites under early treatment or correction strategies will be monitored each season. Monitoring includes recording results or conditions, and evaluating monitoring results and their implications. Record monitoring on forms agreed to by the District and Forest Weed Coordinators.

d. A separate file record will be maintained for each inventoried site conforming to NRIS / Terra database requirements. Copies of completed inventory forms and all other forms and records will be maintained at District offices.

A detailed map of each site will be maintained with weed inventory and monitoring forms. All data will be forwarded to database stewards for entry in appropriate databases (eg. NRIS / Terra, GIS, etc.).

2. Monitoring of Prevention Strategies

Each NEPA document and project plan for any project having the potential to affect or be affected by noxious weeds will contain noxious weed risk assessments and prevention strategies, as appropriate.

In addition, the project plan/NEPA document will detail a method of monitoring the activities to determine the effectiveness of the prevention strategies in preventing or slowing the invasion or spread of noxious weeds. The Forest will annually select 5 to 10 percent of these projects for monitoring to determine effectiveness.

Monitoring methods for prevention can include measurement of pre- and post-project vegetative and soil parameters such as:

a. Percent bare ground

b. Percent desirable herbaceous vegetative cover, shrub and/or tree canopy cover

c. Percent cover by noxious weeds, either within the project area as a whole or within a given site area

d. Measurement of specific noxious weeds parameters such as:

1. Number and size of sites within the project area

2. Number and size of sites within seed transport distance of the project area

3. Increase in size of existing noxious weed sites within the project area

4. Occurrence of new invaders in a project area within a given time period following initiation of the project

3. Water Quality Monitoring for Herbicide Projects

Water quality monitoring is required under this plan where:

a. Collection of samples is legally required.

b. Herbicide labels recommend monitoring.

If water quality monitoring is required due to any of the above situations, monitoring will be tailored to the site and situation, with guidance from hydrologists, soil scientists, and/or fisheries biologists as appropriate.

VI. REPORTING

The Forest Noxious Weed Program Manager will coordinate the following annual reporting with input from District Noxious Weed Coordinators as needed:

A. Annual report of accomplishments of acres inventoried and treated through the Management Attainment Reporting System (MARS).

B. Pesticide Use Proposal Report and Pesticide Use Report

C. Each District Weed Coordinator will update the TERRA and RMACT or other appropriate database with noxious weed inventory, treatment, and monitoring information as necessary.

VII. COORDINATION

A. The District Noxious Weed Coordinators, with help from the Forest Noxious Weed Program Manager, will meet at least annually with the local county weed managers to discuss such items as exchange of information on potential invaders, treatment practices, effectiveness of treatments, coordinated efforts, prevention strategies, and public awareness efforts.

B. The District Noxious Weed Coordinators, with help from the Forest Noxious Weed Program Manager, will work with County Weed Boards to develop Memorandum of Understanding (MOU) that will guide the coordination efforts under the framework of this plan. The Forest Supervisor and the appropriate County Official will approve these MOU's.

C. A communication plan will be implemented to provide for notification of treatment activities.

CHAPTER 3

ANNUAL REVIEW CHECKLIST

Checklist for Annual Review of Noxious Weed Treatment Projects

This checklist is to be used during the annual review of noxious weed treatment projects. This list is not all-inclusive, but lists species that were identified during the environmental analysis that should be considered in identification of treatments for a noxious weed population. The Interdisciplinary Team may identify other factors for consideration during the annual review. If appropriate, these factors can be added to the checklist.

If a species on the checklist is present in a proposed treatment area then treatment methods that will not adversely affect the species should be selected unless non-treatment of the weed population will have a greater adverse effect ecosystem in the long-term. If a proposed treatment is likely to adversely affect a threatened, endangered, or proposed species then application of that treatment is outside the scope of the Noxious Weed Treatment Plan.

Question	**Yes/No**
Is an active peregrine falcon nest located within ½ mile of a treatment proposed from March through July?	
Do proposed treatment activities occur within riparian areas adjacent to greenback cutthroat trout or Colorado River cutthroat trout populations?	
Do areas of suitable habitat for Preble's meadow jumping mouse occur within the proposed treatment areas?	
Do occupied northern goshawk nest areas occur within sight and sound of treatment areas proposed from March through July?	
Do occupied ferruginous hawk nest areas occur within 500m of treatment areas proposed from March through July 15?	
Are treatment activities proposed in mountain plover habitat during nesting and chick-rearing periods (April 10-July 10)?	
Are treatment activities proposed in occupied long-billed curlew nest areas from April 15 through June 15?	
Are noxious weed treatments proposed in occupied prairie dog colonies?	
Is herbicide treatment proposed adjacent to known amphibian breeding areas?	
Do PETS plant species populations occur within areas proposed for noxious weed treatments?	

CHAPTER 4

PRIORITY SPECIES DESCRIPTIONS, PREFERRED TREATMENTS

This Chapter consists of descriptions of each of the ARNF-PNG priority noxious weed species, including relevant biological characteristics and preferred treatment methods. General maps of areas with the best available information on known infestations are available at District offices. The data is incomplete due to a lack of coordinated noxious weed inventory to date across the ARP.

Site types, or affected environments, where noxious weeds normally occur are described in the EA, Chapter 3. These site types correspond to the "Sites" column in the treatment tables for each species discussed below.

I. **Downy brome**, cheatgrass, downy chess ***(Bromus tectorum*** L.***)*** *(Anisantha tectorum)*, family Poaceae

Due to the amount of cheatgrass present and the widespread nature of infestations, maps for this species are not included here.

Description: Downy brome was introduced from the Mediterranean region and Eurasia and is widely distributed throughout North America. This grass is found in western states, including Colorado from 4000' to 9000', along roadsides, waste areas, misused pastures, rangelands, and cultivated crop areas. Downy brome is found on open slopes and occupies salt desert shrub, sagebrush, pinyon juniper, and less commonly aspen and conifer communities. Although it is found in many climatic areas, 15-56 cm precipitation zones are favored. It is an annual or winter annual, which germinates in the Fall, overwinters as a seedling, and flowers in the spring from April through June. Plants as small as 2.5 cm are capable of producing seed with an average of 300 seeds per plant. Seeds may remain viable in soil for 2 to 5 years. Seeds are spread by wind, animals, and as a contaminant in hay, grain, and straw. Seeds will germinate regardless of whether they are in contact with soil. Inadequate fall or spring moisture seems to be the primary factor which inhibits germination. Downy brome is highly competitive for soil moisture with perennial grasses due to its early spring growth habit.

Control: Downy brome is a prolific seed producer with a seed viability of 2-5 years. After plants have reached maturity, plant biomass is dry and presents a fire hazard. Although considered an invader, downy brome is important forage on certain intermountain ranges.

Mechanical: Mowing can help to reduce seed production. However, plants continue to develop during growing season, and late-developing plants may be capable of producing seed after mowing. Grazing may also help to reduce plant numbers, but is not an effective method of control.

Chemical: Effective control can be achieved with Roundup followed by competition with perennial grasses. Plateau has also been used with good results.

Biological: There is limited information on the potential of biological control of downy brome. Animals such as rabbits and mice will feed on it, as will some migratory grasshoppers.

Other: Prescribed burns followed by competition with perennial grasses is an effective method of control. However, the prescribed burn should occur in early spring to kill seedlings. Burning may also help to reduce the surface seed bank. Caution should be exercised with the timing of prescribed burns because fires later in the growing season may only reduce competition from other warm season species and promote re-establishment of downy brome.

II. Diffuse knapweed *(Centaurea diffusa)*, family Asteraceae

Description: Diffuse knapweed was introduced from Eurasia and is widely distributed throughout the U.S. This plant is well adapted to semi-arid areas and thrives in areas of 9-16" annual precipitation. It is generally found on dry, light, porous soils, and open habitat but readily colonizes soils of a wide range of chemical and physical properties. This plant is a biennial, occasionally an annual or short-lived perennial, and reproduces solely by seeds. Regrowth from root crowns may occur for a number of years, with only occasionally regrowth one year after seed production. Diffuse knapweed flowers July to September and plants die after setting seed. This plant is a prolific seed producer, capable of producing up to 40,000 seeds/m². Mature plants break off at ground level and tumble with the wind, dispersing seeds as they go. Diffuse knapweed quickly invades disturbed sites as well as undisturbed native plant communities. It is considerably more competitive than most annual and perennial grasses.

Control: The rosette growth of the first year resists mowing and grazing. Diffuse knapweed has a taproot that deeply penetrates the soil. It is somewhat resistant to chemical control. Control efforts are of little value if native vegetation is scarce or absent. Reinvasion will occur unless tillage techniques, which establish competitive grass cover, are used.

Mechanical: Pulling or cutting diffuse knapweed is a commonly recommended control measure. Studies show that plants cut below the crown grew back 38% of the time, while those which had the rosette removed along with 2-4" of taproot survive 40% of the time (Roche 1995). Deep plowing (18 cm) can reduce knapweed. Mowing once at flowering stage or once at bud stage and again at flowering stage can reduce the number of plants that produce seeds.

Chemical: Effective control can be achieved with Tordon 22K and 2,4,D plus Banvel.

Biological: The banded seed head fly has been used to control knapweed. These flies reduce seed production and may devitalize the plants up to 95%. Other biological control agents have also been used with some success, including two gall flies *(Urophora aphinis* and *Urophora quadrifasciata)* which are available in Colorado. A metallic wood boring beetle (*Sphenoptera jugoslavica*) feeds within

the root crown and is somewhat effective. Research at Montana State indicates that a complex of insects (perhaps 12) are needed to reduce diffuse and spotted knapweed populations. Livestock (sheep, goats, cattle) will consume diffuse and spotted knapweeds.

Other: Irrigation, where possible, can be used to stimulate grass competition. Usually, in disturbed sites, grass seeding is necessary to prevent re-infestation. Burning or tillage can provide temporary control of knapweed.

III. **Russian knapweed *(Acroptilon repens)***, family Asteraceae

Description: Russian knapweed is native to the southern Ukraine, southeast Russia, Iran, Kazakhstan, and Mongolia. An estimated 50,000 acres are infested with Russian knapweed in Colorado in at least 27 counties. In Colorado, Russian knapweed apparently is not restricted to any particular soil type and occurs in pastures, agronomic crops, roadsides, waste places, and some rangeland. Russian knapweed forms dense, single-species stands over time due to allelopathy and competition. It is a creeping, herbaceous perennial that reproduces from seed and vegetative buds in its root system. The weed expends most of its reproductive energy on vegetative propagation. Roots expand rapidly, covering up to 12 square yards in diameter in two growing seasons.

Control: Ideally, Russian knapweed should be precluded from entering uninfested areas. Like other creeping perennials, the key to controlling Russian knapweed is to exhaust the nutrient stores in its root system. Thus, an integrated management plan should be developed that places continual stress on the weed. The best management plan would include tillage and chemical control techniques. Scientists agreed at the 1989 Knapweed and Leafy Spurge Symposia that integrated management systems need to be developed to recover land infested by these species. A single control strategy, such as mowing or a herbicide, usually is not sufficient (Beck 1996). Furthermore, an integrated management approach is most rational since different treatments result in different effectiveness and feasibility under various circumstances. Several different methods tailored to a given site and conducted at different times of the year can be used in combination to increase control while lowering costs. Unfortunately, research to develop such systems is limited.

Mechanical: Mowing is not an effective Russian knapweed control measure because it seems to stimulate shoot growth, (Tarshis and Mordovets 1974 as cited in Benz, 1998) apparently by activating root bud growth. Deep plowing over a 3-year period will control Russian knapweed somewhat if roots are cut to a 30 cm depth (Mordevets *et al.* 1972 as cited in Benz, 1998). Although roots may be destroyed by this technique (Agadzhanyan and Agadzhanyan 1967 as cited in Benz, 1998), care must be taken to not spread the knapweed by scattering root segments; any or all can propagate new shoots. No information was found on how large of a root segment it takes to propagate a new shoot.

Chemical: Chemical control of Russian knapweed is difficult because of the deep and extensive root system with numerous buds that serve as a means of vegetative reproduction. Picloram, dicamba, 2,4-D, and glyphosate are functional

herbicides to manage Russian knapweed on rangeland. Effectiveness and residual activity varies (Watson 1980; Ferrell *et al*. 1986; Lym and Messersmith 1986; Bovey 1991; Weed Control Manual 1992 as cited in Benz, 1998). Picloram at 2.2 kg/ha provided 100% Russian knapweed control 30 days after treatment, and 12 months after treatment and 4 years later still showed 80% control (Sebastian and Beck 1995 as cited in Benz, 1998). 2,4-D causes quick burn-down, but has little to no long term effect (Swearingen and Whitson 1993; Lym and Messersmith 1986; Whitson and Gill 1990 as cited in Benz, 1998). A study by Ferrell and Alley (1985 as cited in Benz, 1998) showed an adequate rate of dicamba to control Russian knapweed caused damage to grasses. Glyphosate is a systemic herbicide that has no soil activity. Temporary control is achieved after initial application, but effective control in the following growing season is not realized (Whitson and Gill 1990 as cited in Benz, 1998).

Biological control: Russian knapweed natural enemies are rare in North America. Known North American predators are polyphagous (feeding on or utilizing many kinds of food), and therefore not suitable for biological control. Several organisms prey on Russian knapweed in its native range but most are seed head predators and are of limited biocontrol value because Russian knapweed reproduces primarily by vegetative shoots. Two parasites are effective biocontrol agents, a nematode (*Subanguina (Paranguina) picridis* Kirj. and Ivan.) and a fungus (*Puccinia acroptili*) (Watson 1980; Watson and Harris 1984; Caesar-Tonthat *et. al*. 1995 as cited in Benz, 1998). *Subanguina (Paranguina) picridis* is established in Colorado, but because this species likes moist areas during the winter and spring infection periods, it does not do well in dry areas. *Puccinia acroptili* is not approved for biocontrol or for transport across state lines.

Other: Beck (personal communication Beck to Benz, 1998) recommends a needed change in philosophy when grazing animals are used as biological weed control agents rather than as traditional forage harvesters. Specific herbivore numbers used on a strategic schedule should be used to stress the weed to achieve long term changes in desired vegetation.

IV. <u>**Spotted Knapweed *(Centaurea maculosa)*,** family Asteraceae</u>

Description: Spotted knapweed was introduced from Europe as a contaminant of alfalfa and clover seed and is distributed throughout the northeastern states, north central states and Pacific northwest. It is adapted to well-drained, light-textured soils that receive summer rainfall, including habitats dominated by ponderosa pine and Douglas-fir**,** as well as foothill prairie habitats. It is found in light, fertile, well drained, often-calcareous soils in warm areas. Lateral root sprouting may result in rosettes that remain attached to this biennial, but expansion is dependent on seeds. It flowers August through September and is cross-pollinated by insects. Plants may produce up to 140,000 seeds/m² and seeds may remain viable after eight years of burial. Seeds generally fall within a 3-12 cm radius of the parent plant. Seeds are dispersed by livestock, rodents, vehicles, and in hay or commercial seed. Spotted knapweed readily establishes on disturbed soils, and its early growth makes it a good competitor for soil moisture and nutrients. Spotted knapweed is believed to produce

allelopathic chemicals, which inhibit the growth of other species. Spotted knapweed is competitive enough to invade healthy plant communities.

Control: See diffuse knapweed above. Seeds are relatively long lived, and may reduce the chances of successful eradication using mechanical control methods. Most literature has focused on reestablishing range, pasture, or cropland, and not on restoration of native plant communities.

Mechanical: Mowing is a possible method of control, but not eradication. Mowing can greatly reduce seed production. However, a well-established seed bank such as those likely to be present in areas of large infestations would likely compensate for any seeds removed by mowing. Mowing just after flowering but prior to seed maturation is an option for areas with little other vegetation that are not steep or rocky. Hand removal and hand clipping prior to seed maturation are other management options, although soil disturbance may promote other weed colonization.

Chemical: Good to excellent control can be achieved with Tordon 22K and 2,4-D plus Banvel.

Biological: See diffuse knapweed above. Four insect species have been introduced into North America to help control knapweeds including two gall flies *(Urophora aphinis and Urophora quadrifasciata)* which are available in Colorado. A moth, which attacks the capitula, and a beetle, which attacks the roots, also show promise as control agents.

Other: Sheep have been used in Montana to reduce spotted knapweed and release grasses from competition (Beck 1994).

V. <u>**Leafy Spurge *(Euphorbia esula)***, family Euphorbiaceae</u>

Description: Leafy spurge originated in Europe, brought to the U.S. as a seed impurity in 1827. It is widely scattered throughout the U.S., distributed throughout the northern half of the U.S.. In Colorado, it is found from 5,000' to over 8,500'; in waste areas, pastures, roadsides, cultivated fields, irrigation ditches, woodlands, and particularly in riparian zones. It is tolerant of a wide range of soils, and may occur in rich damp soils such as the bank of rivers or on dry nutrient poor soils common to the western U.S. It grows most rapidly on coarse-textured soils. Leafy spurge is a perennial, which reproduces by extensive slender rootstocks and seeds. It flowers May to September. On heavy soils, about 60% of new shoots are produced from seed, while on lighter soils plants mainly spread by vegetative propagation. Seed production can be as high as 130,000 seeds/plant and seeds may remain viable in the soil for at least 5-8 years. In addition, both the crown buds and root buds can remain viable in soil for a number of years. Seeds are contained in a dry capsule, which explodes when dry, projecting seeds up to 15'. Seeds can float, and may be spread by animals such as birds. Seeds often have a rather high germination rate, ranging from 60-80%. The majority of seeds germinate within the first two years, usually in May or June.

Control: An extensive root system containing large nutrient reserves makes leafy spurge extremely difficult to control.

Mechanical: This treatment alone is ineffective. Mowing or grazing before seed, set followed by a fall chemical treatment has shown some results. Because leafy spurge can reproduce rapidly from roots, tillage or shallow removal can actually cause a net increase in shoots and number of stems.

Chemical: This is the most effective control at this time. Tordon 22K or Banvel provide the best control. Multiple treatments may be necessary.

Biological: Several insects are currently being investigated for biological control and may be especially useful in areas where herbicide use is difficult or risky. The spurge hawkmoth *(Hyles euphorbiae* L.) lays eggs on the plants and the larvae emerge and feed on the plant. Two beetles *(Apthona nigriscutis* and *A. flava)* also show some promise as biological control agents. Research has shown 95% control of leafy spurge with allelopathic grasses (Whitson 1992).

Other: Grazing can be used to help deplete root reserves; however, the sap contained in leafy spurge has been reported to cause severe irritation to mouth and digestive tract in cattle which may result in death. Grasses can compete with leafy spurge, but over-grazing will limit the ability of grasses to compete. In some cases, fertilization and irrigation may also help to improve grass growth and competition. However, these conditions may also favor other weedy species. The most effective control methods will likely combine a number of management techniques to reduce root reserves and stress the plants.

VI. Canada Thistle *(Cirsium arvense)*, family Asteraceae

Description: Canada thistle was introduced from Eurasia and North Africa and is distributed throughout the U.S. and in Canada, from Quebec to British Columbia. In Colorado, it occurs from 4,000' to over 10,500', in open meadows, wetlands, roadsides, and rangelands. The optimal annual precipitation is 400-750 mm. It can tolerate saline soils (up to 2% salt) but grows best in dry soils. It does not tolerate water-logged or poorly aerated soils. This plant is a perennial forb, reproduces by seeds and creeping roots. Horizontal roots may extend up to 15', and may grow 6-15' deep in soil. Roots may also remain dormant for many years if deeply buried. Plants flower from July to October. Insects or weather conditions may prevent maturation of seed. However, some insects are attracted to Canada thistle and may pollinate different patches up to 200' apart (Beck 1991). Reproduction from the root system contributes to localized spread, while seeds contribute to spread over longer distances. One plant has the potential to produce up to 5,200 seeds in a season, but the average is about 1,500 seeds/plant. Some studies have found seeds can remain viable up to 21 years in soil and up to 4 months in water. Seeds are dispersed by wind, contaminated crop seed, feed, manure, packing straw, and irrigation water. Seeds mature from July through September and germinate most readily in mid-spring. Seeds do not tolerate drought stress or moist, poorly aerated soils.

Control: Every piece of the root system is capable of forming a new plant. Because of rootstocks, breaking up roots may only lead to more plants. Seeds also have the potential to remain viable in the soil for up to 20 years. In general, Canada thistle is able to recover from most stress by utilizing its root reserves. However, Beck (1991) pointed out that the key to controlling perennials such as Canada thistle is to stress the plant to reduce the plant's carbohydrate reserves.

Mechanical: Frequent mowing over a number of years will help control Canada thistle. However, mowing by itself is not effective unless it is done with a high frequency. Mowing at two week or monthly intervals may be needed to keep root reserves low. Fall herbicide treatments that follow mowing can be effective management system (Beck 1991).

Chemical: Research at Colorado State University indicates that the effectiveness of herbicides is best when combined with tillage or other mechanical methods. Tordon 22K and Banvel provide excellent control, but require multiple treatments.

Biological: A few insect species have some potential for biological control. However, because of the presence of native thistles on the Forests and Grassland, biological control is likely not a feasible option. The four biological control agents with the greatest threats are two beetles, one fly and the painted lady butterfly. *Ceutorhynchus litura* is a weevil currently used as a biological control agent in Colorado. This weevil can stress Canada thistle, and may cause death of the plant if populations are large enough. However, Beck (1991) points out that use of the weevil alone is not enough to control Canada thistle. Another biological control agent, which shows some promise, is a fungus *(Puccinia)* that is used in conjunction with 2,4-D.

Other: Grasses and alfalfa can compete with Canada thistle if moisture and fertility are at optimal levels. However, tillage control generally is insufficient to adequately control Canada thistle.

VII. Musk thistle *(Carduus nutans* L.*)*, family Asteraceae

Description: Musk thistle was introduced from Europe, is native to southern Europe and western Asia, and is widespread throughout the U.S., particularly in the northeastern and north central states. This plant occupies disturbed sites along roadsides, stream banks, and pastureland, particularly on gravely soils. It occurs in sagebrush, pinyon juniper, and mountain brush communities. Musk thistle does not appear to have any specific climatic requirements other than a cool period of vernalization for flowering. This plant is a winter annual or biennial, which reproduces solely by seeds. If severed at the taproot, it will produce a plant capable of flowering. Musk thistle flowers from June to October and dies after it produces seeds. Average productivity is approximately 4,000 seeds per plant; however, a single plant can produce up to 20,000 seeds. Seeds may remain viable in the soil for 10 years or more. Seeds are dispersed primarily by wind, but may be dispersed by water, animals, and farm machinery. Germination usually begins 14-21 days after seed is dispersed in

the fall. Musk thistle spreads rapidly and forms extensive stands, which displace desirable forage.

Control: Due to long seed viability, removal of the living plants will not eliminate the plant. The key to controlling musk thistle is to prevent seed production. Most control methods will have a detrimental effect on other plants and may cause a disturbance that will favor reinvasion of other exotic species. Dense musk thistle stands along roadsides and in degraded areas can be treated by spot use of herbicide. A persistent program of hand chopping can treat stands in high-quality areas.

Mechanical: Repeated hand grubbing and mowing can be used to help control musk thistle. Musk thistle will not tolerate tillage and can be removed easily by severing its root below the ground surface with a shovel or hoe. Mowing can also reduce seed output if plants are cut when the terminal head is in the late flowering stage (Beck 1991). The crown must be completely removed because removing only the head will result in a multi-stemmed plant. Repeated treatments are necessary, and heads should be deeply buried or burned because seeds can mature and become viable after cutting.

Chemical: Effective control can be achieved with Tordon 22K and 2,4,D plus Banvel.

Biological: This method must be used with other control methods to provide effective control. A seed head weevil (*Rhinocyllus conicus*) reduces seed production; however, the Forests and Grassland does not plan to use this species because it is known to have attacked native thistle species in Rocky Mountain National Park (Jeff Connor, pers. comm). A weevil (*Trichosirocalus horridus*) attacks the crown of the thistle by killing the apical meristem and reduces the flowering potential of the plant. A leaf-feeding beetle (*Cassida rubiginosa*) causes considerable damage by skeletonizing leaves. This beetle's feeding habit does not compete with *Rhinocyllus conicus* or *Trichosirocalus horridus*.

Other: Fire is not an effective method of control. Spring burns do not reach high enough temperatures to kill crowns. However, burns may increase warm season grasses and their competitive effects on musk thistle. Maintaining pastures in good condition (by not over-grazing or fertilizing) is one important component to successfully managing musk thistle (Beck 1991).

VIII. Dalmatian Toadflax *(Linaria dalmatica)*, family Scrophulariaceae

Description: Dalmatian toadflax was introduced as an ornamental from southeastern Europe. It is distributed throughout North America, although most common in the western U.S. It grows in oak, aspen, sagebrush, mountain brush, and riparian plant communities, and is found on roadsides, rangeland, waste places, and cultivated fields. Dalmatian toadflax has a high tolerance for low temperatures and coarse-textured soils. It is a perennial, reproducing by seeds and underground rootstocks. Seed dispersal is primarily by wind, but livestock can also disperse seeds. Estimated seed longevity in soil is 10 years. Over 90% germination has been obtained with 2-3

year old seeds in the laboratory. Most seeds germinate the following spring; some germinate in fall after harvest.

Control: An extensive, deep root system along with waxy leaves makes this plant very difficult to control. Control methods for dalmatian toadflax and yellow toadflax (see *Linaria vulgaris* below) are very similar.

Mechanical: Control can be obtained using clean tillage, but requires 8-10 operations for the first year and 4-5 in the second year. Repeated mowing 2 to 3 times per year will slow the spread and reduce seed production. Planting competitive perennial and winter annual grasses is also required. Pulling can be effective for small infestations.

Biological: Currently, no biological control agents are considered widely effective. A predatory noctuid moth (*Calophasia lunula*) has been reared and released by the Colorado Department of Agriculture. The larvae feed extensively on leaves and flowers of toadflax, severely damaging the plants.

Chemical: Effective control results with repeated applications of Tordon 22K, Tordon 22K plus 2,4-D, or Roundup.

Other: Some reports indicate that toadflax is poisonous and may be harmful to livestock. However, both Dalmatian and yellow toadflax are unpalatable, so reports of livestock poisoning are uncommon.

IX. **Yellow Toadflax**, butter and eggs ***(Linaria vulgaris)***

Description: Yellow toadflax was introduced as an ornamental from Eurasia, and is found throughout most of temperate North America. This plant is distributed in Colorado from about 6,000' to over 10,000', historically mostly on the western slope, but rapidly increasing in the eastern slope. Yellow toadflax occupies waste places, pastures, roadsides, cultivated fields, meadows, gardens, and former homesteads. It occurs in a wide variety of habitats, but is generally limited to wet or dark conditions on sandy or gravely soils. It is a perennial, reproducing by seeds and extensive, creeping rhizomes. Production from shoots can be large, and may begin at seedling stage. The plant is self-incompatible and insect pollinated, flowering from June to August. Vegetative reproduction may begin as soon as 2-3 weeks after germination, and is possible from root fragments as short as 1 cm. Plants produce from 1,500 to 30,000 seeds per individual, but it is often difficult to define an individual because of colony-forming habits. Seeds are winged which may allow for long-distance dispersal. Water and ants may also disperse seeds. Seeds may remain dormant for up to 8 years.

Control: An extensive root system makes this species difficult to control.

Mechanical: Generally the keys to controlling yellow toadflax are to prevent seed production and promote root starvation, which can be accomplished by mowing and tillage (Saner et al. 1995). Tillage has been somewhat successful in

controlling yellow toadflax in crops. Mowing may also be used to help decrease seed production but generally will not eliminate stands.

Chemical: Good control results with repeated applications of Tordon 22K, Tordon 22K plus 2,4-D, or Roundup.

Biological: Biological control has been relatively successful. In general, the root system seems to be the most promising target that is susceptible to damage. Weevil *(Gymnetron antirrhini)* larvae develop inside of the fruit, and adults feed on leaves, buds and stems. A predatory noctuid moth (*Calophasia lunula*) has been reared and released by the Colorado Department of Agriculture. The larvae feed extensively on leaves and flowers of toadflax, severely damaging the plants.

Other: Grasses can be used to compete with yellow toadflax. Disturbed areas can be seeded with vigorous, well adapted grasses. The species is generally considered only moderately poisonous to livestock. Fire is not a recommended method of control.

X. Chinese clematis (*Clematis orientalis)* Family: Ranunculaceae

Description: Chinese clematis has been naturalized in the Rocky Mountains since the late nineteenth century but has spread rapidly since the 1970's and become weedy and a threat to young trees and native vegetation. (Flora of North America, V3) This species is found up to approximately 9000 ft. especially along roadsides adjacent to the Interstate-70 corridor in Colorado. Colorado is currently the only state listing Chinese clematis as a noxious weed, however adjacent western states are beginning to recognize invasive populations. Like other *clematis* species, the plant is a woody perennial climbing vine, with yellow-green recurved sepals on axillary and sometimes terminal flowers. (Flora of North America, V3) Seed production can be prolific with mature achenes easily windborne. Once established, the plant can eliminate native vegetation from grasses to trees, via nutrient and light competition.

The Clear Creek Ranger District has as yet unmapped populations of Chinese clematis estimated at less than 100 acres. The species is also suspected to occur on the Boulder and Canyon Lakes Ranger Districts, especially along montane-zone roadside corridors.

Control: Control of Chinese clematis is a new endeavor in Colorado.

Mechanical: Mechanical control has not been documented at this time.

Chemical: Late June/Early July application of 3:1 quart tankmix Garlon 3A:Garlon 4 Per 100 gallons of water. (Dow Agrosciences, Centerline Newsletter); 2,4,D (R.Broda, Weld County Weed Specialist)

Biological: Information regarding biological control of Chinese clematis is extremely limited.

Other: Fire effects are unknown.

XI. Black henbane (*Hyoscyamus niger*), Nightshade Family

Description: Black henbane is an annual or biennial plant that grows from 1 to 3 feet tall. The entire plant is covered with greasy hairs. Pubescent leaves are up to 8 inches long and 6 inches wide. They are coarsely-toothed to shallowly lobed and are heavily foul scented at all growth stages. Flowers are borne on spikes form the leaf axils from May until September. They are showy, 5 lobed, up to 2 inches across, and greenish-yellow in color with deep purple veins and throats. Two rows of pineapple-shaped fruit, about 1 inch long, appear in early fall. Within each capsule are hundreds of tiny black seeds and each plant can produce 10,000 to half a million seeds. The calyx forms a 1-inch, urn-shaped "fruit" that has a thickened lid that pops off at maturity and spills the black seeds. (Oneplan, 2002). Hardened, almost woody seed stalks remain standing throughout winter and following spring.(Stevens, 2002)

Biennial form for Black Henbane is leafy and branched erect stems, and annual Black Henbane has few-branched stems (CDFA, 2002).

Black Henbane contains hyoscyamine and other alkaloids, which can cause livestock poisoning. All parts of the plant is considered toxic and is a poisonous plant to humans (CWMA, 2002). As few as 10 to 20 seeds is enough to poison a child. Black Hebane attracts hares by its scent.

Black Henbane prefers a sunny and dry alkaline soil. These plants do best in sandy or well-drained loam soils with moderate fertility. They do not tolerate waterlogged soils. Black Henbane is often found in disturbed open sites, roadsides, fields, waste places, and abandoned gardens. Taproot is thick and fleshy (CDFA, 2002).

They are found in Colorado between 4500 feet to 9000 feet (George Beck, pers. comm.).

Control

Mechanical: hand pull (using gloves) or dug making sure that the thick fleshy taproot is completely removed. Plants detected with mature fruits should be carefully placed in bags to prevent seed dispersal and area monitored for new emergence for at least 4 years. Prevent seed production by cultivation, hand pulling or mowing plants. Plants with mature fruits can be burned to kill seed. (CDFA, 2002). Mature henbane is difficult to mow due to its thick stem. It can be removed with a shovel (Twinfalls, 2002).

Chemical: if area is too large for hand pulling then a systemic herbicide such as glyphosate should be applied. Glyphosate is nonselective but should provide effective control. (CDFA, 2002). Generally easier to control when younger (Stevens, 2002). Good results are seen in rangeland, pastures and other non-crop areas by applying products containing metsulfuron, picloram, dicamba, or 2,4-D at the rosette to bolt stage, before flower. Picloram is a "restricted use" product and can only be applied by a licenced applicator (Twinfalls, 2002). Tordon have been used with success too.

Biological: There is no known insect available to control this noxious weed (Twinfalls, 2002).

Other: Good vegetative cover substantially reduces chance of infestation. (Stevens, 2002).

XII. Oxeye daisy (*Chrysanthemum leucanthemum*), family Asteraceae

Description: Oxeye daisy is a short-lived perennial forb with oblique, shallow, branched rhizomes and flowering heads mostly solitary at the ends of stems. Flower heads have white ray flowers and yellow disk flowers. Fruits have about 10 ribs. Basal stems are prostrate and will root; the other stems are erect (10 – 30 inches) and simple or slightly branched. Stems are glabrous to slightly pubescent. Stem leaves are alternate, sessile, narrow, often irregularly toothed, and become progressively smaller toward the top. Basal and lower leaves are 2-5 inches long, lance-shaped to narrowly egg-shaped (Colorado Natural Areas Program 2000; Olson and Wallander 1999).

In addition to vegetative production, oxeye daisy is a prolific seed producer, with plants at one site producing from 1,300 to 26,000 seeds. Seeds become viable 10 days after flowers open, and are usually dispersed by wind close to the parent plant as they lack a pappus. Seeds may also be carried by animals. It is not known whether oxeye daisy can flower and produce seeds in its first year (Olson and Wallander 1999). One study found 82 percent of seeds were viable after 6 years and 1 percent were still viable after 39 years (Montana Weed Control Association 2003).

Oxeye daisy occurs in meadows, native grasslands, pastures seeded to introduced species, waste grounds, and along railway embankments and roadsides. To establish, it appears to require reduced competition from existing vegetation by grazing or other disturbance. Its wide edaphic tolerance allows it to grow well on relatively nutrient-poor to nutrient-rich soils. Cattle grazing encourages spread of oxeye daisy because cattle avoid it; horses, sheep, and goats graze it (Olson and Wallander 1999).

Oxeye daisy is estimated to have infested over 11,000 acres in Colorado, with concentrations in Summit and Eagle counties and southwestern Colorado (Colorado Department of Agriculture 2002). It is widespread and abundant on the Sulphur Ranger District; occurs in multiple locations, primarily in small patches, on the Boulder and Clear Creek Districts; and is not known to occur on Canyon Lakes District or Pawnee Grassland. It occurs from 5,300 to at least 10,900 feet in Colorado (Eric Lane, pers. comm.).

Control

Mechanical: In pastures, plants should be mowed as soon as the first flowers open to eliminate seed production; however, mowing may stimulate shoot production and subsequent flowering if the growing season is long enough. Mowing may have to be repeated during a long growing season. Root systems are shallow and the plant can be dug up and removed; however remaining roots

may produce new shoots so it is important to remove the entire root system. Hand removal will have to be continued for multiple years because seeds can remain viable in the soil for a long time (Montana Weed Control Association 2003; Olson and Wallander 1999).

Oxeye daisy's shallow root system is easily killed by intensive cultivation; however, one-time plowing and disking may enhance vegetative reproduction by fragmenting the plants (Olson and Wallander 1999).

Chemical: Herbicides may control oxeye daisy in pastures for two or three years, but generally need to be reapplied every three to five years to prevent new plants from establishing from seeds in the seedbank. Oxeye daisy is moderately resistant to some 2,4-D based herbicides except at high rates (Olson and Wallander 1999). Effective herbicides that can be used at lower rates include clopyralid and picloram (Missoula County Weed District undated). Escort (metsulfuron), Curtail (2,4-D and clopyralid)/Telar (chlorsulfuron) combination, and Curtail alone, in order of effectiveness, have been effective in the Granby area (Sumerlin, pers. Comm. Feb. 2003).

Biological: No biological controls are currently available in Colorado for this species (Becky Byrd, Colorado Department of Agriculture Palisade Insectary, pers. comm. 2003). Apparently no biological control agents are available in the U.S. at this time (Integrated Weed Control 2002; Cornell University 2002). Sheep or goats would readily graze oxeye daisy and have the greatest potential to reduce its importance in plant communities in the long term (Olson and Wallander 1999).

Other: Nitrogen fertilizers alone and combining herbicides with fertilizers has been effective in some areas, due to stimulation of growth of grasses that shade out oxeye daisy (Olson and Wallander 1999). Mulching with a thick layer makes it difficult for the small seeds to germinate. Burning is not effective in controlling oxeye daisy infestations (Missoula County Weed District undated).

CHAPTER 5

PROCEDURES FOR MIXING, LOADING, AND DISPOSAL OF CHEMICALS

The following measures will apply to all herbicide applications.

1. All mixing of herbicides will occur on flat or gently sloping upland sites, at least one-half mile upstream from water intakes or diversions for municipal water supplies; at least one-half mile upstream from diversions for fish hatchery water supplies; at least one mile upstream from domestic water supplies; at least 100 feet from groundwater wellheads; and at least 200 feet from private land.

2. Mixing and cleaning water must come from public or cooperator supplies, and must be transported to the site in labeled containers that are separate from water used for other purposes.

3. Dilution water will be added to the spray container prior to addition of the spray concentrate.

4. All hoses used to add dilution water to spray containers will be equipped with a device to prevent back shipping.

5. Applicators will mix only those quantities of herbicides that can be reasonably used in a day.

6. During mixing, mixers will wear a hard hat, goggles, or face shield, rubber gloves, rubber boots, and protective overalls.

7. All empty containers will be triple rinsed and rinsate disposed of by spraying near the application site.

8. All unused herbicide will be stored in facilities designed and constructed in accordance with provisions of Title 35, Article 10 of the Colorado Pesticide Applicator Act; Part 11 of "Rules and Regulations Pertaining to Administration and Enforcement of the Pesticide Applicator Act". Additionally, all pesticide storage facilities will be constructed with adequate sump capacity to contain spillage of the entire quantity of pesticide stored.

9. All empty and rinsed herbicide containers will be punctured and either burned or disposed of in a sanitary landfill.

10. When using herbicides:

In order to assure low risk when using any herbicide and/or carrier, the maximum exposure (in pounds of active ingredient per day) to any worker will not exceed those listed below:

	Type of Application		
Herbicide/Carrier	Horsepack Backpack	Ground Mechanical	Hand Application
2,4-D	0.9	130*	2.5
Glyphosate	17.0	**	47.0
Picloram (Tordon)	**	**	**
Dicamba	2.3	330*	6.2

* Maximum exposure (in lbs. of active ingredient) for an applicator/mixer/loader. Values may be lower for a mixer/loader.

** Application at the maximum application rate and to the maximum number of acres can be completed with a low risk of health effects.

SOURCE: USDA Forest Service, Risk Assessment for Herbicide Use in Forest Service Regions 1, 2, 3, 4, and 10 and on Bonneville Power Administration Sites, September 1992, Tables III-E-21 through III-E-26, pp. III-E-45 through III-E-50. Where values were not the same for a chemical for every table in the risk assessment, the lowest (i.e. most conservative) values are displayed in the above table.

CHAPTER 6

SPILL PLAN

The following equipment will be available with vehicles or pack animals used to transport herbicides and in the immediate vicinity of all spray operations.

1. A shovel
2. A broom (except backcountry operations)
3. 10 pounds of absorbent material or the equivalent in absorbent pillows
4. A box of large plastic garbage bags
5. Rubber gloves
6. Safety goggles
7. Protective overalls
8. Rubber boots

The appropriate Material Safety Data Sheets will be reviewed with all personnel involved in the handling of herbicides.

The following material from the U.S. EPA document entitled *Applying Pesticides Correctly: A Guide for Private and Commercial Applicators* will be reviewed with all personnel involved in handling herbicides:

CLEANUP OF HERBICIDE SPILLS

Minor Spills
Keep people away from spilled chemicals. Rope off the area and flag it to warn people. Do not leave unless someone is there to confine the spill and warn of the danger. If the herbicide was spilled on anyone, wash it off immediately.

Confine the spill. If it starts to spread, dike it up with sand or soil. Use absorbent material such as soil, sawdust, or absorbent clay to soak up the spill. Shovel all contaminated material into a leak proof container for disposal. Dispose of it as you would excess herbicides. Do not hose down the area, because this spreads the chemical. Always work carefully and do not hurry.

Major Spills
The cleanup of a major spill may be too difficult for you to handle, or you may not be sure of what to do. In either case, keep people away, give first aid if needed, and confine the spill. Then call the Forest Health and Safety Officer, the Forest Hazardous Materials Coordinator, the local fire department, and state pesticide authorities for help.

As a last resort, contact Chemtrec. Chemtrec is normally contacted only for larger spills and more hazardous substances than will be used under the Forest and Grassland Noxious Weed Management Plan. Chemtrec stands for Chemical Transportation Emergency Center, a public service of the Manufacturing Chemicals Association. Its offices are located in Washington, D.C. Chemtrec provides immediate advice for those at the scene of emergencies. Chemtrec

operates 24 hours a day, seven days a week, to receive calls for emergency assistance. For help in chemical emergencies involving spills, leaks, fire, or explosions, call toll-free 800-424-9300 day or night. This number is for emergencies only.

If a major herbicide spill occurs on a highway, have someone call the Colorado State Patrol or the local sheriff for help. Carry these phone numbers with you and use 911 where available. Do not leave until responsible help arrives.

RESPONSE ACTION GUIDE

THE PRIMARY RESPONSIBILITY OF ANY FOREST EMPLOYEE(S) ENCOUNTERING A HAZARDOUS MATERIALS EMERGENCY OR OIL SPILL IS COMPLETE AND ACCURATE REPORTING TO APPROPRIATE AUTHORITIES IN A TIMELY MANNER.

Forest Service Employee(s) will not assume an incident command role for any hazardous materials emergency or oil spill, but may provide support services as directed by an authorized federal On-Scene Coordinator (OSC) or other state or local authority.

Within the limits of personal safety, common sense, and recognition of the dangers associated with any hazardous materials emergency or oil spill, Forest Service employee(s) may provide necessary and immediate response actions until an authorized OSC or other authority can take charge. These actions may include:

- Public warning and crowd control.
- Retrieval of appropriate information for reporting purposes.

Additionally, and **ONLY** after verification of the type of hazardous material involved and its associated hazards, a Forest Service employee(s) may also take actions including:

- Rescue of persons in imminent danger.
- Limited action to mitigate the consequences of the emergency.

Under no conditions shall a Forest Service employee(s):

- Place themselves or others in imminent danger.
- Perform or direct actions that will incur liability for the Forest Service.

IF THERE IS ANY QUESTION THAT THE EMERGENCY MAY CONSTITUTE A THREAT TO PERSONAL SAFETY, LIMIT YOUR RESPONSE TO PUBLIC WARNING AND REPORTING OF THE INCIDENT.

PRECAUTIONS

When approaching the scene of an accident involving any cargo, or other known or suspected hazardous materials emergency including oil spills:

- Approach incident from an upwind direction, if possible.
- Move and keep people away from the incident scene.
- Do not walk into or touch any spilled material.
- Avoid inhaling fumes, smoke, and vapors even if no hazardous materials are involved.
- Do not assume that gases or vapors are harmless because of lack of smell.
- Do not smoke, and remove all ignition sources.

HAZARDOUS MATERIALS RELEASES AND OIL SPILLS CONTACT LIST AND IMMEDIATE ACTION GUIDE

Individual	
Actions	**Contacts**
Do not expose yourself or others to any unknown material: a. Do not attempt rescue or mitigation until material has been identified and hazards and precautions noted. b. Warn others and keep people away. c. Approach only from upwind. d. Do not walk in or touch material. e. Avoid inhaling fumes and vapors. f. Do not smoke, and remove ignition sources.	District Ranger District Law Enforcement Personnel Forest Health and Safety Officer (Jeanette Early) Forest Hazardous Materials Coordinator (Chris Ida)
Report the incident. Complete "Reporting Action Guide" within reasonable limits of exposure and timeliness, and report information to District Ranger, Forest Health and Safety Officer, and Forest Hazardous Materials Coordinator.	
If there is any question that the incident is a threat to personal safety, limit response to public warnings and reporting.	
Forest	
Immediately contact the appropriate Forest personnel who will take the following actions: a. Determine if incident is a true emergency. b. Determine who is responsible party for incident, and whether appropriate actions and reporting have been accomplished. c. From available information, determine hazards and precautions, if possible, and relay further instructions to reporting individual through the District. d. Initiate appropriate local reporting actions, and coordinate responses with the District. e. Arrange Forest support for on-scene coordinator and/or local emergency response officials as requested.	Forest Hazardous Materials Incident Coordinator who will determine extent of emergency. If incident is determined reportable, contact: a. National Response Center b. EPA Hazmat emergency response. c. Regional Incident Dispatcher. d. County Sheriff and/or County Disaster and Emergency Services Coordinator. e. State Emergency and Disaster organizations. f. Internal Forest contacts.
Make appropriate local emergency contacts as directed by Forest Hazardous Materials Incident Coordinator. Relay information from Forest Hazardous Materials Incident Coordinator back to District and up to Regional Office as appropriate.	

HAZARDOUS MATERIALS AND OIL SPILLS REPORTING ACTION GUIDE

Although reporting requirements vary depending on the type of incident, the responsibility of the employee(s) in the field is limited to collecting appropriate information and relaying it to the proper level of the organization in a timely manner. Following is a list of the information that should be collected, if possible; however, IT IS MORE IMPORTANT TO MAINTAIN PERSONAL SAFETY AND REPORT IN A TIMELY MANNER THAN TO COLLECT ALL INFORMATION.

1. Date: Time of Release:
   Time Discovered:
   Time Reported:
   Duration of Release:

2. Location: (Include State, county, route, milepost, etc.)

3. Chemical name:
   Chemical identification number:
   Other Chemical Data:

   NOTE: For transportation related incidents, this information may be available from the driver, placards on the vehicle, and/or shipping papers.

4. Known health risks:

5. Appropriate precautions if known:

6. Source and cause of release:

7. Estimate quantity released: _____ gallons
   Quantity reaching water: _____ gallons
   Name of affected watercourse:

8. Number and type of injuries:

9. Potential future threat to health or environment:

10. Your name:
    Phone number for duration of emergency:
    Permanent phone number: FTS_____ Commercial

11. Name and address of carrier:

12. Railcar or truck number:

If there is any doubt whether an incident is a true emergency, or whether reportable quantities of hazardous materials or petroleum products are involved, or whether a responsible party has already reported the incident, **ALWAYS REPORT THE INCIDENT.**

SOURCE: Environmental Assessment for the Management and Control of Noxious Plants on the San Juan/Rio Grande National Forests, USDA Forest Service, July 1996. Appendix C modified for the Forests and Grassland.

CHAPTER 7

PUBLIC NOTIFICATION AND COMMUNICATION

I. INTRODUCTION

This chapter replaces appendix J of the Environmental Assessment for the Noxious Weed Management Plan for the Arapaho and Roosevelt National Forest and Pawnee National Grassland. It provides activities and formalizes a process to inform persons on the State of Colorado Registry of Pesticide Sensitive Persons (Registry) and other interested publics about weed treatment on the Forests and Grassland. This chapter is a starting point and it will be modified as necessary to assure that it is effective, up to date, and comprehensive.

II. GOALS

Interested publics want to know how weeds will be controlled on the Forests and Grassland. it is important to promote coordination and information sharing between all parties involved. This Chapter on public notification and communication has four goals:

1. Keep interested and affected people informed about proposed weed treatment methods and locations;
2. Provide weed treatment information to individuals in a timely manner, so that potential effects may be mitigated;
3. Provide information sharing protocol so that weed treatment on the Forests and Grassland takes place with two-way communication between the Forest Service and the public; and
4. Allow for public participation in weed treatments and monitoring.

III. ACTION PLAN

Due Date/ Completed	Activity	Goal	Who Responsible
Annually	1. District will maintain a list of upcoming weed treatment projects each year. This will include anticipated treatment schedules, methods and locations.	Keep interested and affected people informed about proposed weed treatment methods and locations. Allow for public participation in weed treatment and monitoring.	District Weed Coordinators
Annually	2. Publish an announcement of treatments in the District newspaper of record.	Same as above.	District Weed Coordinators
Annually and as needed	3. Post information on treatment plans and methods types and locations, as well as how to contact the Forest weed program manager on the Forests and Grassland Web page.	Same as above.	Forest Weed Program Manager
Annually and as needed	4. Maintain past treatment information on treatment schedules, methods, and locations at District offices. This information includes maps showing locations, descriptions of treatment methods.	Same as above.	District Weed coordinators
Annually	5. Monitor and update communications processes in this plan as necessary to make sure that interested parties are receiving useful and timely information. This includes meeting schedules, methods, and protocol.	Provide information sharing protocol so that weed treatment on the Forests and Grassland takes place with two-way communication between the Forest Service and the public.	Forest Weed Program Manager

Due Date/ Completed	Activity	Goal	Who Responsible
As needed	6. Meeting with interested persons.	Provide information sharing protocol so that weed treatment on the Forests and Grassland takes place with two-way communication between the Forest Service and the public. Allow for public participation in weed treatment methods and monitoring.	Forest and District Weed Coordinators
Prior to treatment	7. Inform any person who is listed in the Registry, and who resides on property abutting the property to be treated, of planned treatment locations, dates, approximate times, methods, and types of pesticide to be used, prior to application.	Keep interested and affected people informed about proposed weed treatment methods and locations. Provide weed treatment information to individuals in a timely manner, so that potential effects may be mitigated.	District Weed Coordinators/ Applicators Have applicators notify individuals on the Registry.[1]
Prior to treatment as requested	8. If requested by persons on the Registry, make telephone notifications of upcoming weed treatment projects near their property.	Provide weed treatment information to individuals in a timely manner, so that potential effects may be mitigated.	District Weed Coordinators/ Applicators
At time of application	9. Post herbicide treated areas as per label directions.	Provide weed treatment information to individuals in a timely manner, so that potential effects may be mitigated.	Applicators
Post treatment as requested	10. Persons on the Registry who request post-treatment notification are informed after the treatment has occurred.	Provide information sharing protocol so that weed treatment on the Forests and Grassland takes place with two-way communication between the Forest Service and the public.	District Weed Coordinators/ Applicators
Annually	11. Each year the District weed coordinator is available for a meeting with persons on the Registry or their representative to discuss proposed weed management strategy, procedures, methods and locations.	Same as above.	District Weed Coordinators

[1] The applicator may meet this requirement by making not less than two attempts to notify any owner or tenant who is on the registry. Such attempts shall be made as early as practicable, but not later than twenty-four hours before the application. If attempted notification fails, the applicator shall attempt to notify the resident in person immediately before the application. Notice of the application and attempts at notification shall be placed on the door of the person requesting notification if all notification attempts fail.

CHAPTER 8

LITERATURE CITED

Agadzhanyan, G. Kh, and A.A,. Agadzhanyan, 1967 The Distribution of and damage caused by Russian Knapweed in Armenia and its Control. Bio. Zh. Armenii 20:15-21

Beck, K.G. 1991. Biennial thistle control with herbicides. In Westview special studies in agriculture science and policy Noxious range weeds, edited by Lynn F. James. p. 254-259.
Beck, K.G. 1994. Russian knapweed biology and management. Colorado State University In Action, No. 3.111.

Beck, K.G. 1996. Russian Knapweed. Natural Resource Series. Colorado State University Cooperative Extension. No. 3.111 Available at http://www.ext.colostate.edu/pubs/natres/03111.html

Benz L. 1998. Russian Knapweed Management . Literature Review. Colorado State University. 25 p.

Bovey, R.W. 1991 Principles of Chemical Control. In Noxious Range Weeds. Westview Press, Boulder, CO 459 pp

Caesar-Tonthat, T.C., Dyer, W.E., Quimby, P.C., Rosenthal, S.S. 1995 Formulation of an endoparasitic nematode, Subanguina picridis Brzeski, a biological control agent for Russian knapweed, Acroptilon repens (L.) DC. Biological control : theory and applications in pest management .June 1995. v. 5 (2) p. 262-266

CDFA. 2002. available at http://pi.cdfa.ca.gov/weedinfo/HYOSCYAM2.html

CWMA. 2002. available at http://www.cwma.org/black_henbane.html

Colorado Department of Agriculture. 2002. Quarterquad survey, Distribution and Abundance of Oxeye Daisy in Colorado. Available at http://www.ag.state.co.us/DPI/weeds/mapping/maps/oxeyedaisy.jpg

Colorado Natural Areas Program. 2000. *Creating an Integrated Weed Management Plan: A Handbook for Owners and Managers of Lands with Natural Values.* Colorado Natural Areas Program, Colorado State Parks, Colorado Department of Natural Resources; and Division of Plant Industry, Colorado Department of Agriculture. Denver, Colorado. 349 pages.

Cornell University. 2002. Biological Control: A Guide to Natural Enemies in North America, available at http://www.nysaes.cornell.edu/ent/biocontrol/

Ferrell, M.A. and H.P. Alley 1985 Russian knap weed shoot control evaluations using dicamba, picloram combinations. Res. Program Rep. Western Soc. Weeds Science p.21

Ferrell, M.A., T.D. Whitson, S.D. Miller, H.P. Alley. 1986. Russian knapweed shoot control evaluations using dicamba, picloram, and dicamba/picloram combinations. Res. Prog. Rep. Western Weed Sci. p. 25.

Flora of North America, 1997. Volume 3. Oxford University Press. Flora Online. (http://www.fna.org). specific webpage (http://flora.huh.harvard.edu:8080/flora/browse.do?flora_id=1&taxon_id=200007697).

Integrated Weed Control. 2002. Web site with product list available at http://www.integratedweedcontrol.com/about.htm

Lym, R. G. and C. G. Messersmith, 1986 Russian and Spotted Knap Weed Control by Several Herbicides in North Dakota. Res. Prog. Rep. Western Soc. Weed Sci p.6-7

Missoula County Weed District. Undated. Integrated Weed Management for Oxeye Daisy control. Available at http://www.mslacountyweed.org/pages/IWMCHLE.html

Montana Weed Control Association. 2003. Oxeye daisy. Available at http://www.mtweed.org/Identification/oxeye_daisy/oxeye_daisy.html

Mordovets, A.A.,I. D. Chernyshev and U.P. Ignatenko 1972. The Reaction of Russian Knapweed plants to root cutting at different depths. Sel'sk boil. 7:299-300.

National Invasive Species Council. 2001. Meeting the invasive Species Challenge, National Invasive Species Management Plan. 80 pp.

Olson, B. E. and R. T. Wallander. 1999. Oxeye Daisy *in* Sheley and Petroff, eds. Biology and Management of Noxious Rangeland Weeds. Oregon State University Press, Corvalis, OR. 438pp.

Oneplan. 2002. available at http://www.oneplan.org/Crop/noxweeds/nxweed01.htm

Roche, B.F. 1995 Diffuse knapweed: Biology and Ecology. Paper given at CWMA Conference December 1995

Saner, M.A., Clements, D.R., Hall, M.R., Doohan, D.J. Crompton, C.W.1995 The biology of Canadian weeds. 105. Linaria vulgaris Mill Canadian journal of plant science. Apr 1995. v. 75 (2) Pages: p. 525-537

Sebastian, J.R. and K.G. Beck 1995 Russian Knapweed Control with Herbicides on Colorado Rangeland. Res. Prog. Rep. Western Soc. Weed Sci. p.14

Stevens. 2002. available at http://www.co.stevens.wa.us/weedboard/other%20weeds/black_henbane.htm

Twinfall. 2002. available at http://www.twinfallscounty.org/weeds/black%20henbane.htm

USDA Forest Service. 1992. Risk Assessment for Herbicide Use in Forest Service Regions 1, 2, 3, 4, and 10 and on Bonneville Power Administration Sites. USDA Forest Service Contract No. 53-3187-9-30.

USDA Forest Service. 1996. Rangeland Analysis and Management Training Guide. USDA Forest Service, Rocky Mountain Region.

USDA Forest Service. 1998. Stemming the Invasive Tide: Forest Service Strategy for Noxious and Nonnative Invasive Plant Management.

USDA Forest Service. 2001. Guidelines for Revegetation for the Arapaho-Roosevelt, Grand Mesa-Uncompahgre-Gunnison, and Medicine Bow-Routt National Forests, And Pawnee and Thunder Basin National Grasslands. 24 pages.

U.S. DowAgrosciences, L.L.C. Centerline Newsletter 2002. 9330 Zionsville Road, Indianapolis, IN. 46268-1189. specific webpage (http://www.dowagro.com/ivm/centerline.htm).

Weed Control Manual. 1992. Meister Publishing Co, 37733 Euclid Ave., Willoughby, OH. 442 p.

Whitson, TD and J.R. Gill. 1990 Russian Knapweed Control With Various Herbicides. Res. Prog. Rep. Western Soc. Weed Sci. p28-29

Whitson, Tom D., editor. 1992 Weeds of the West. The Western Society of weed Science in cooperation with the Western United States Land Grant Universities Cooperative Extension Services. Jackson Wyoming Pioneer Of Jackson Hole, 630 pp.

U. S. Land Office, Denver Colorado
I hereby certify that this map was filed in this office on June 30, 1903, and that the tracts marked "V" are vacant public lands of the United States

E. D. Ford Register

MAP OF THE PIPE LINES OF THE DENVER EUREKA POWER CO.

BOULDER CO. COLO.

from The HEAD GATE on MIDDLE BOULDER CREEK to the RESERVOIR and POWER STATION.

Denver, Colo. Jan. 22. 1902.
Scale 2000 ft = 1 inch.

WALTER PEARL. Eng'r. in Charge of Sur's.
G. H. Sethman. — Consulting Engineer.

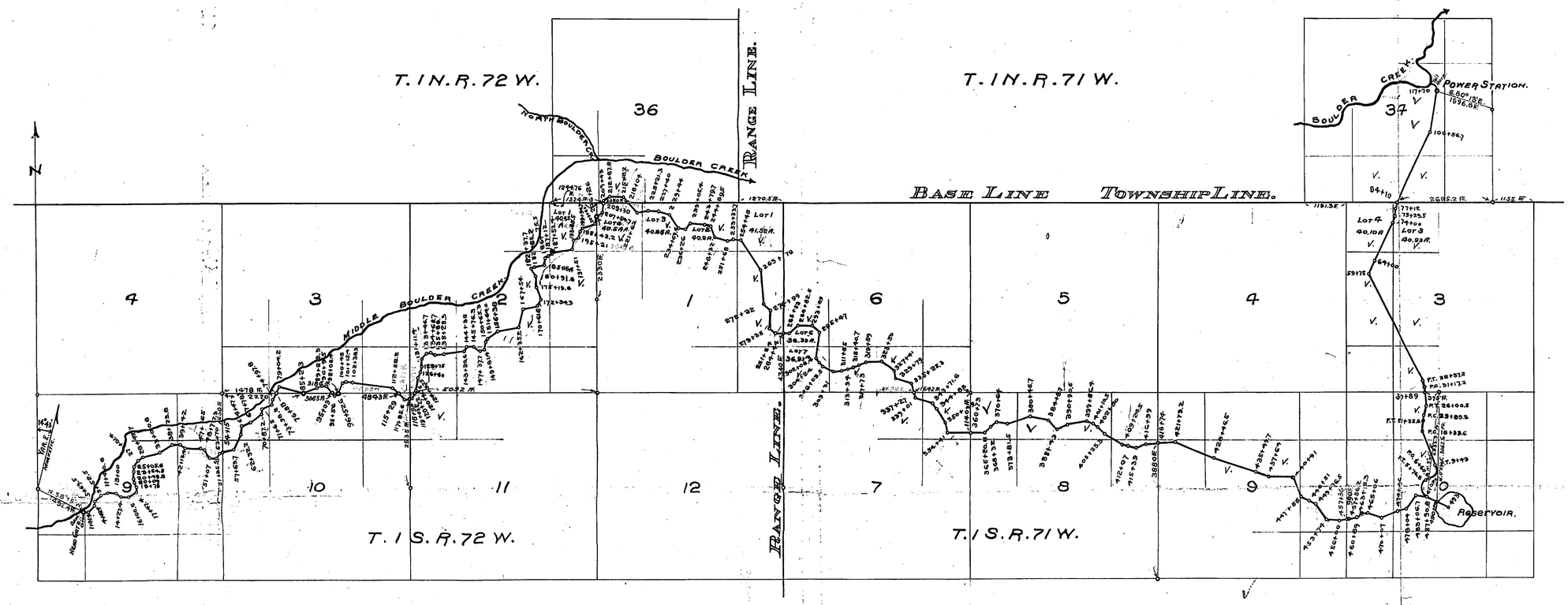

State of Colorado, City and County of Denver } ss:

Walter Pearl, being duly sworn, says he is the Engineer employed to make the survey by the Denver Eureka Power Company; that the survey of said Company's pipe lines, described as follows:
beginning at Station 0, center of headgate of 36 inch pipe line, a point on the south bank of Middle Boulder Creek, in the N. W. 1/4 of the S. W. 1/4 of section 9, T. 1 S. R. 72 W. of the 6th P. M.; from which the W. 1/4 corner of said Section 9, bears N. 58° 15' W. 1492.4 feet; thence in a general easterly direction a distance of 9.28 miles to Station 490, a point on the high water line of proposed reservoir, from which the N. 1/4 Corner of Section 10, T. 1 S. R. 71 W. of the 6th P. M. bears N. 0°03' E. 3062.6 feet; thence continuing from Station 487+90.8 = Station 0, from which the N. 1/4 Corner of said Section 10, bears N. 3°06' E. 2933.9 ft, in a northerly direction to Station 117+70 the Power Station, in the S. W. 1/4 of the N. E. 1/4 of section 34, T. 1 N. R. 71 W., from which the east 1/4 corner of Section 34, T. 1 N. R. 71 W., of the 6th P. M. bears S. 80° 13' E. 1596.8 feet; being a further distance of 2.23 miles, making a total length of pipe line of 11.51 miles,
Was made by him as engineer employed by the Company and under its authority, commenced on the 8th day of October 1902, and ending on the 22nd day of December 1902, and that the survey of the said pipe line accurately represents a proper grade line for the flow of water, and that such survey is accurately represented upon this map and by the accompanying field notes. And no lake or lake bed, stream or stream bed, is used for the said pipe line except as shown on this map.

Walter Pearl.
Engineer in charge of surveys.

Sworn and subscribed to before me this 29th day of June 1903.

My commission expires Dec. 3rd 1906

Seal.

Robert H. Beach
Notary Public.

I Warren Hollingsworth McLeod do hereby certify that I am president of the Denver Eureka Power Company; that Walter Pearl, who subscribed the accompanying affidavit, was the engineer employed to make the survey by the said company; that the survey of the said pipe line, as accurately represented on this map and by the accompanying field notes, was made under authority of the company; that the company is duly authorized by its articles of incorporation to construct the said pipe line upon the location shown upon this map; that the said pipe line as represented on this map and by said field notes, was adopted by the company, by resolution of its board of directors, on the 1st day of April 1903, as the definite location of the said pipe line described as follows:
beginning at Station 0, center of headgate of 36 inch pipe line, a point on the south bank of Middle Boulder Creek, in the N. W. 1/4 of the S. W. 1/4 of section 9, T. 1 S. R. 72 W. of the 6th P. M.; from which the W. 1/4 corner of said section 9, bears N. 58° 15' W. 1492.4 feet; thence in a general easterly direction a distance of 9.28 miles to station 490, a point on the high water line of proposed reservoir, from which the N. 1/4 Corner of Section 10, T. 1 S. R. 71 W. of the 6th P. M. bears N. 0°03' E. 3062.6 feet; thence continuing from station 487+90.8 = Station 0, from which the N. 1/4 Corner of said Section 10, bears N. 3°06' E. 2933.9 feet, in a northerly direction to Station 117+70 the Power Station, in the S. W. 1/4 of the N. E. 1/4 of section 34, T. 1 N. R. 71 W., from which the east 1/4 corner of Section 34, T. 1 N. R. 71 W. of the 6th P. M. bears S. 80° 13' E. 1596.8 feet; being a further distance of 2.23 miles, making a total length of pipe line of 11.51 miles.
And that no lake or lake bed, stream or stream bed, is used for the said pipe line except as shown on this map; and that the map has been prepared to be filed for the approval of the Secretary of the Interior, "in order that the Company may obtain the benefits of an act of Congress entitled "An act relating to rights of way through certain parks, reservations and other public lands approved February 15th 1901." And I further certify that the right of way herein described is desired for the conveyance of water in a pipe for the developement of power for Electrical transmission for public purposes.

W. H. McLeod
President of the Denver Eureka Power Company.

Attest: Roger W. Woodbury
Secretary.

Seal of Company.

Filed for record Dec. 8, 1903 at 9 o'clock a.m., Fee 2.50 Reg. of Deeds

The use of the right of way shown on this map is hereby granted in accordance with the provisions of the act of February 15, 1901 — 31 Stat. 790 — and the regulations issued under the act.

Dec. 8, 1903

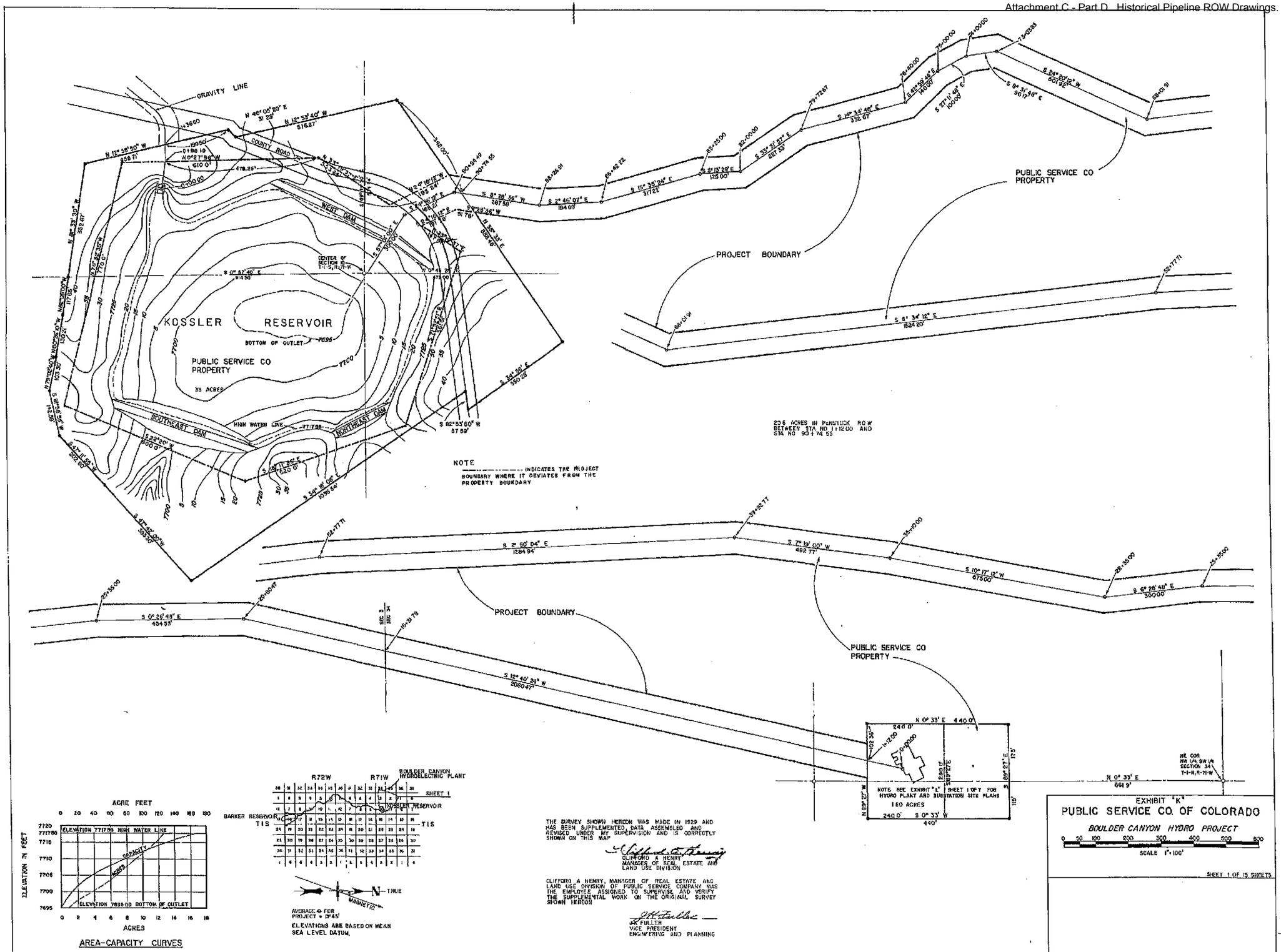
GRAVITY LINE
COUNTY ROAD
WEST DAM
KOSSLER RESERVOIR
BOTTOM OF OUTLET
PUBLIC SERVICE CO PROPERTY
35 ACRES
HIGH WATER LINE
SOUTHEAST DAM
NORTHEAST DAM
PROJECT BOUNDARY
PUBLIC SERVICE CO PROPERTY
NOTE
INDICATES THE PROJECT BOUNDARY WHERE IT DEVIATES FROM THE PROPERTY BOUNDARY
20.6 ACRES IN PENSTOCK R.O.W. BETWEEN STA NO 1+12.00 AND STA NO 93+74.53
PROJECT BOUNDARY
PUBLIC SERVICE CO PROPERTY
NOTE SEE EXHIBIT "L" SHEET 1 OF 7 FOR HYDRO PLANT AND SUBSTATION SITE PLANS
160 ACRES
ACRE FEET
ELEVATION IN FEET
ELEVATION 7717.99 HIGH WATER LINE
CAPACITY
AREA
ELEVATION 7695.00 BOTTOM OF OUTLET
ACRES
AREA-CAPACITY CURVES
R72W
R71W
BOULDER CANYON HYDROELECTRIC PLANT
SHEET 1
KOSSLER RESERVOIR
BARKER RESERVOIR
T1S
T1S
TRUE
MAGNETIC
AVERAGE ∢ FOR PROJECT = 13°45'
ELEVATIONS ARE BASED ON MEAN SEA LEVEL DATUM.
THE SURVEY SHOWN HEREON WAS MADE IN 1929 AND HAS BEEN SUPPLEMENTED, DATA ASSEMBLED AND REVISED UNDER MY SUPERVISION AND IS CORRECTLY SHOWN ON THIS MAP
CLIFFORD A. HENRY
MANAGER OF REAL ESTATE AND LAND USE DIVISION
CLIFFORD A. HENRY, MANAGER OF REAL ESTATE AND LAND USE DIVISION OF PUBLIC SERVICE COMPANY WAS THE EMPLOYEE ASSIGNED TO SUPERVISE AND VERIFY THE SUPPLEMENTAL WORK ON THE ORIGINAL SURVEY SHOWN HEREON
J.H. FULLER
VICE PRESIDENT
ENGINEERING AND PLANNING
EXHIBIT "K"
PUBLIC SERVICE CO. OF COLORADO
BOULDER CANYON HYDRO PROJECT
SCALE 1" = 100'
SHEET 1 OF 15 SHEETS

1005 - 2

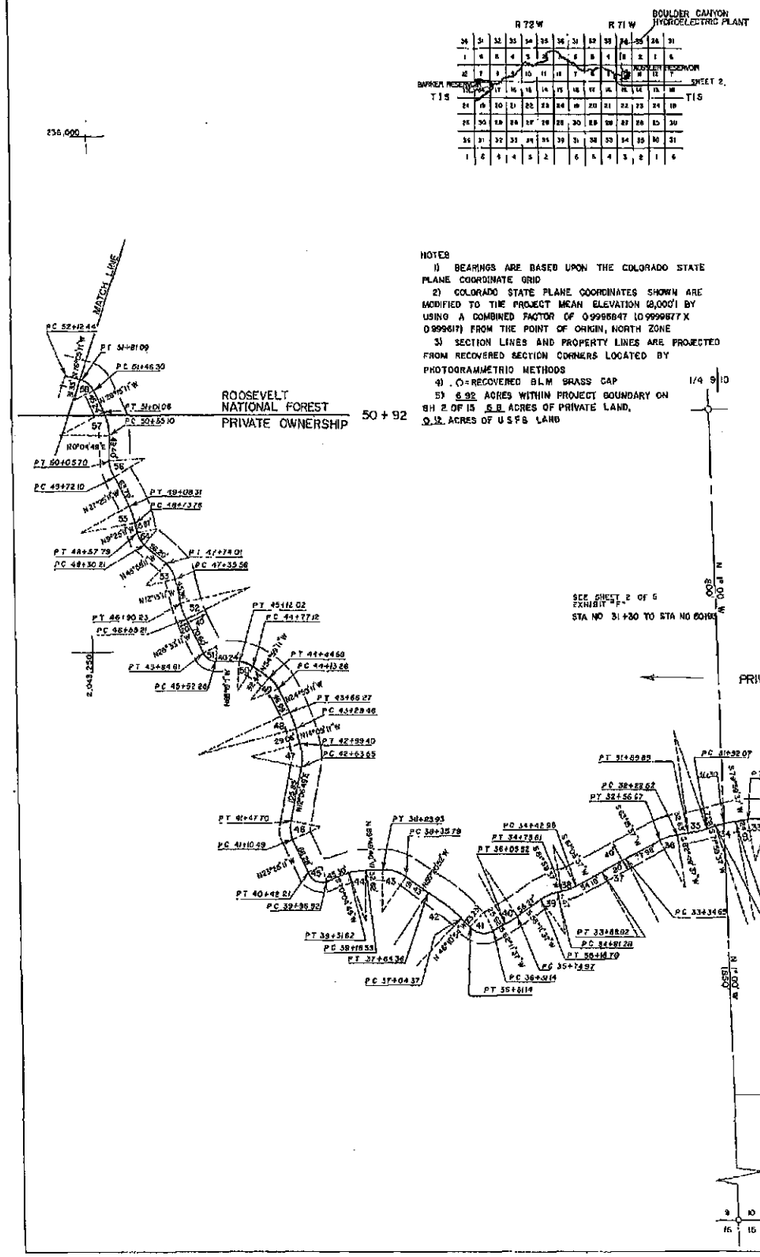

NOTES

1) BEARINGS ARE BASED UPON THE COLORADO STATE PLANE COORDINATE GRID

2) COLORADO STATE PLANE COORDINATES SHOWN ARE MODIFIED TO THE PROJECT MEAN ELEVATION (8,000'±) BY USING A COMBINED FACTOR OF 0.9998847 (0.9999877 X 0.999961?) FROM THE POINT OF ORIGIN, NORTH ZONE

3) SECTION LINES AND PROPERTY LINES ARE PROJECTED FROM RECOVERED SECTION CORNERS LOCATED BY PHOTOGRAMMETRIC METHODS

4) ○ = RECOVERED B.L.M. BRASS CAP

5) 6.92 ACRES WITHIN PROJECT BOUNDARY ON SH 2 OF 15 6.8 ACRES OF PRIVATE LAND, 0.12 ACRES OF U.S.F.S. LAND

CURVE NUMBER	Δ	RADIUS	TANGENT	LENGTH
1	9°10'00"	200.00'	16.03'	32.00'
2	51°34'00"	80.00'	38.64'	72.00'
3	33°08'00"	80.00'	23.80'	46.26'
4	19°46'00"	100.00'	17.45'	34.56'
5	47°30'00"	50.00'	22.00'	41.45'
6	66°52'00"	50.00'	27.07'	46.63'
7	72°00'00"	40.00'	29.05'	50.27'
8	46°44'00"	40.00'	17.28'	32.63'
9	8°38'00"	300.00'	22.64'	45.20'
10	22°16'30"	180.00'	35.49'	70.08'
11	22°36'02"	150.00'	29.97'	59.17'
12	25°27'47"	117.67'	26.59'	52.30'
13	98°40'41"	25.61'	30.05'	44.45'
14	39°38'05"	50.00'	18.02'	34.58'
15	63°05'16"	50.00'	30.67'	55.02'
16	102°04'11"	30.00'	37.09'	53.44'
17	17°49'29"	80.00'	12.54'	24.83'
18	30°20'00"	80.00'	21.85'	42.35'
19	37°22'00"	80.00'	20.25'	39.13'
20	59°59'00"	30.00'	17.32'	31.41'
21	68°11'00"	30.00'	20.30'	35.70'
22	19°44'00"	100.00'	17.39'	34.44'
23	42°43'00"	45.00'	17.60'	33.55'
24	37°55'00"	45.00'	18.48'	29.78'
25	13°14'00"	150.00'	17.40'	34.64'
26	44°04'00"	60.00'	24.28'	46.15'
27	51°54'00"	50.00'	24.33'	45.29'
28	45°31'00"	40.00'	16.78'	31.78'
29	63°43'00"	40.00'	24.86'	44.48'

CURVE NUMBER	Δ	RADIUS	TANGENT	LENGTH
30	12°20'52"	200.00'	21.64'	43.10'
31	10°46'34"	200.00'	18.92'	37.73'
32	46°33'06"	55.00'	15.06'	28.44'
33	28°36'00"	80.00'	20.39'	39.95'
34	8°00'00"	300.00'	20.96'	41.89'
35	10°50'00"	200.00'	18.96'	37.82'
36	19°34'00"	100.00'	17.24'	34.15'
37	2°10'00"	1432.69'	27.09'	54.18'
38	20°54'00"	90.00'	16.60'	32.83'
39	28°48'00"	80.00'	19.06'	37.42'
40	7°00'00"	250.00'	15.28'	30.54'
41	71°37'29"	40.00'	28.68'	50.00'
42	9°09'56"	500.00'	40.08'	78.99'
43	34°28'48"	80.00'	24.82'	48.14'
44	20°05'31"	100.00'	17.72'	35.07'
45	86°30'00"	30.00'	28.22'	45.29'
46	36°32'00"	60.00'	19.22'	37.21'
47	26°16'00"	100.00'	23.33'	45.84'
48	10°50'00"	200.00'	18.96'	37.82'
49	30°00'00"	60.00'	16.00'	31.42'
50	33°20'00"	60.00'	17.90'	34.91'
51	61°46'00"	30.00'	17.94'	32.34'
52	14°20'00"	140.00'	17.60'	35.02'
53	35°42'00"	60.00'	19.90'	38.43'
54	39°30'00"	40.00'	14.36'	27.58'
55	18°00'00"	110.00'	17.42'	34.56'
56	27°30'00"	70.00'	17.13'	33.60'
57	26°20'00"	100.00'	23.39'	45.96'
58	49°50'02"	40.00'	18.58'	34.79'

THE SURVEY SHOWN HEREON WAS MADE IN 1929 AND HAS BEEN SUPPLEMENTED AND REVISED UNDER MY SUPERVISION BY FIELD AND AERIAL SURVEYS AND IS CORRECTLY SHOWN ON THE MAP

ELMER M. CLARK
REGISTERED LAND SURVEYOR
COLORADO REG NO 2275

ELMER M. CLARK, REGISTERED LAND SURVEYOR, WAS EMPLOYED BY PUBLIC SERVICE COMPANY OF COLORADO TO CHECK AND SUPPLEMENT THE SURVEY SHOWN HEREON

LOU FULLER
VICE PRESIDENT
ENGINEERING AND PLANNING

EXHIBIT "K"

PUBLIC SERVICE CO OF COLORADO

BOULDER CANYON HYDRO PROJECT

0 50 100 200 300 400 500 600

SCALE 1" = 100'

SHEET 2 OF 15 SHEETS

1005- 3

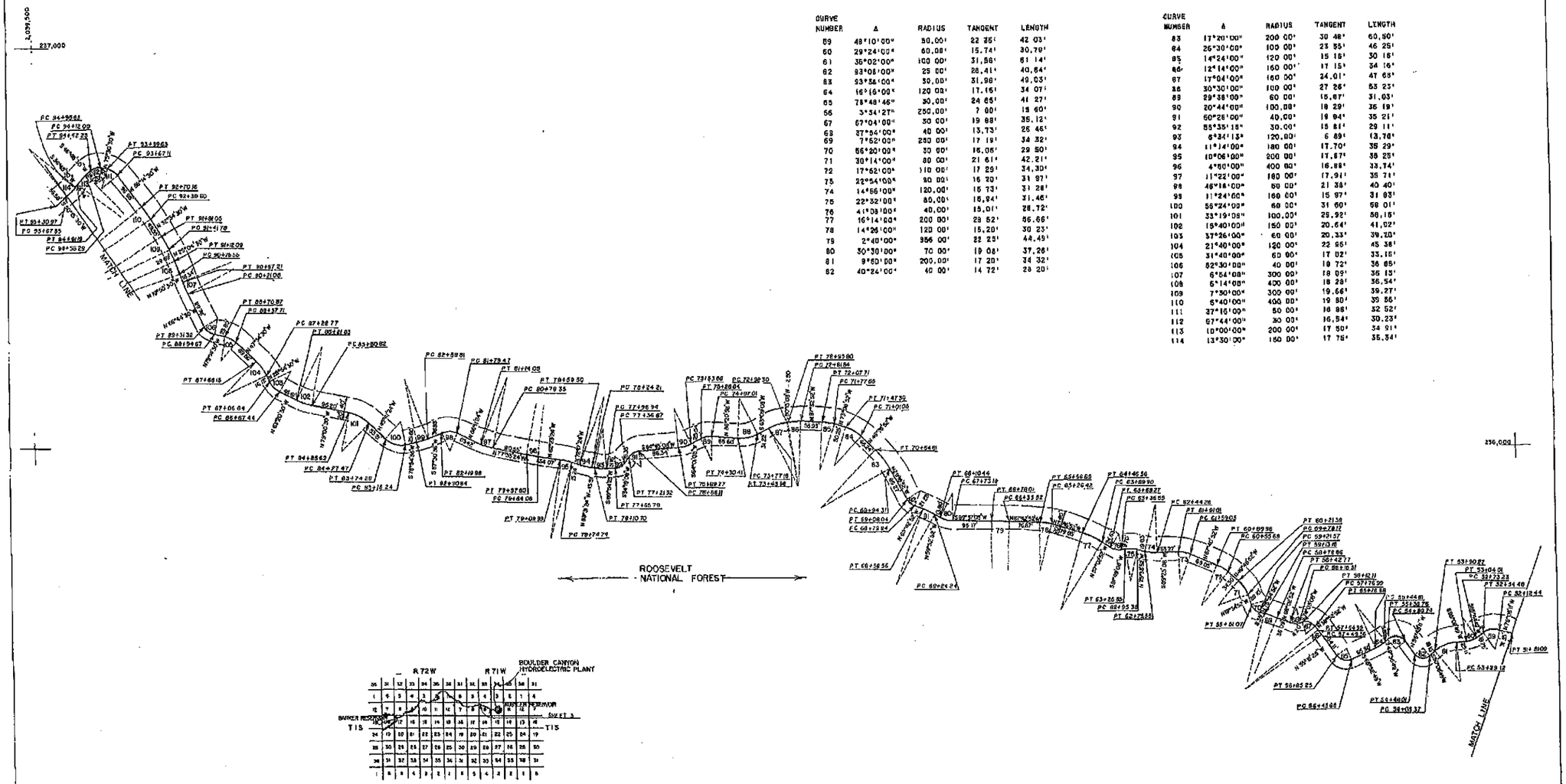

CURVE NUMBER	Δ	RADIUS	TANGENT	LENGTH
59	48°10'00"	50.00'	22.35'	42.03'
60	29°24'00"	60.00'	15.74'	30.79'
61	35°02'00"	100.00'	31.56'	61.14'
62	93°05'00"	25.00'	26.41'	40.64'
63	53°36'00"	50.00'	31.96'	49.03'
64	16°16'00"	120.00'	17.15'	34.07'
65	78°48'45"	30.00'	24.65'	41.27'
66	3°34'27"	250.00'	7.00'	15.60'
67	67°04'00"	30.00'	19.68'	35.12'
68	37°54'00"	40.00'	13.73'	26.46'
69	7°52'00"	250.00'	17.19'	34.32'
70	56°20'00"	30.00'	16.06'	29.50'
71	30°14'00"	80.00'	21.61'	42.21'
72	17°52'00"	110.00'	17.29'	34.30'
73	22°54'00"	90.00'	16.20'	31.97'
74	14°56'00"	120.00'	15.73'	31.28'
75	22°32'00"	80.00'	15.94'	31.46'
76	41°03'00"	40.00'	15.01'	28.72'
77	16°14'00"	200.00'	28.52'	56.66'
78	14°26'00"	120.00'	15.20'	30.23'
79	2°40'00"	956.00'	22.25'	44.49'
80	30°30'00"	70.00'	19.08'	37.26'
81	9°50'00"	200.00'	17.20'	34.32'
82	40°24'00"	40.00'	14.72'	28.20'

CURVE NUMBER	Δ	RADIUS	TANGENT	LENGTH
83	17°20'00"	200.00'	30.48'	60.50'
84	26°30'00"	100.00'	23.55'	46.25'
85	14°24'00"	120.00'	15.15'	30.15'
86	12°14'00"	160.00'	17.15'	34.16'
87	17°04'00"	160.00'	24.01'	47.68'
88	30°30'00"	100.00'	27.26'	53.23'
89	29°38'00"	60.00'	15.87'	31.03'
90	20°44'00"	100.00'	18.29'	36.19'
91	50°26'00"	40.00'	19.94'	35.21'
92	85°35'15"	30.00'	15.81'	29.11'
93	6°32'13"	120.00'	6.89'	13.76'
94	11°41'00"	180.00'	17.70'	35.29'
95	10°06'00"	200.00'	17.67'	35.25'
96	4°50'00"	400.00'	16.88'	33.74'
97	11°22'00"	180.00'	17.91'	35.71'
98	46°18'00"	60.00'	21.38'	40.40'
99	11°24'00"	160.00'	15.97'	31.83'
100	55°24'00"	60.00'	31.60'	58.01'
101	33°19'00"	100.00'	25.92'	58.15'
102	15°40'00"	150.00'	20.64'	41.02'
103	37°26'00"	60.00'	20.33'	39.20'
104	21°40'00"	120.00'	22.95'	45.38'
105	31°40'00"	60.00'	17.02'	33.16'
106	52°30'00"	40.00'	19.72'	36.65'
107	6°54'00"	300.00'	18.09'	36.13'
108	6°14'00"	400.00'	18.28'	36.54'
109	7°30'00"	300.00'	19.66'	39.27'
110	6°40'00"	400.00'	19.80'	39.56'
111	37°16'00"	50.00'	16.98'	32.52'
112	67°44'00"	30.00'	16.54'	30.23'
113	10°00'00"	200.00'	17.50'	34.91'
114	13°30'00"	150.00'	17.79'	35.34'

NOTES:
1) BEARINGS ARE BASED UPON THE COLORADO STATE PLANE COORDINATE GRID
2) COLORADO STATE PLANE COORDINATES SHOWN ARE MODIFIED TO THE PROJECT MEAN ELEVATION (8,000) BY USING A COMBINED FACTOR OF 0.9995947 (0.9999677 X 0.999917) FROM THE POINT OF ORIGIN, NORTH ZONE
3) SECTION LINES AND PROPERTY LINES ARE PROJECTED FROM RECOVERED SECTION CORNERS LOCATED BY PHOTOGRAMMETRIC METHODS
4) 2.99 ACRES OF LAND WITHIN PROJECT BOUNDARY ON SH 3 OF 15, ALL U.S.F.S. LAND

TRUE N
MAGNETIC
AVERAGE Φ FOR PROJECT = 13°45'

THE SURVEY SHOWN HEREON WAS MADE IN 1929 AND HAS BEEN SUPPLEMENTED AND REVISED UNDER MY SUPERVISION BY FIELD AND AERIAL SURVEYS AND IS CORRECTLY SHOWN ON THE MAP

ELMER M. CLARK
REGISTERED LAND SURVEYOR
COLORADO REG NO 2279

ELMER M CLARK, REGISTERED LAND SURVEYOR, WAS EMPLOYED BY PUBLIC SERVICE COMPANY OF COLORADO TO CHECK AND SUPPLEMENT THE SURVEY SHOWN HEREON

J.C. FULLER
VICE PRESIDENT
ENGINEERING AND PLANNING

EXHIBIT "K"
PUBLIC SERVICE CO. OF COLORADO
BOULDER CANYON HYDRO PROJECT
0 50 100 200 300 400 500 600
SCALE: 1" = 100'
SHEET 3 OF 15 SHEETS

CURVE NUMBER	Δ	RADIUS	TANGENT	LENGTH
115	71°36'00"	30.00'	21.64'	37.49'
116	11°28'00"	200.00'	20.08'	40.03'
117	12°10'00"	200.00'	21.32'	42.47'
118	16°42'00"	116.74'	17.14'	34.03'
119	16°32'00"	120.00'	17.43'	34.63'
120	19°38'00"	100.00'	17.30'	34.27'
121	17°00'03"	120.00'	17.93'	35.60'
122	3°58'00"	500.00'	17.31'	34.62'
123	16°20'06"	130.00'	18.68'	37.06'
124	16°29'43"	120.00'	17.59'	34.55'
125	50°58'00"	40.00'	19.07'	35.59'
126	64°00'00"	30.00'	18.75'	33.51'
127	19°38'00"	100.00'	17.30'	34.27'
128	24°54'00"	100.00'	22.08'	43.46'
129	7°36'00"	300.00'	19.93'	39.79'
130	41°26'00"	50.00'	18.91'	36.16'
131	19°15'11"	100.00'	16.96'	33.60'
132	30°44'00"	50.00'	21.98'	42.91'
133	19°02'35"	50.00'	8.39'	16.62'
134	39°59'48"	50.00'	18.20'	34.90'
135	7°30'00"	300.00'	19.58'	39.27'
136	15°15'00"	130.00'	17.42'	34.64'
137	18°14'00"	100.00'	16.09'	31.82'
138	19°30'00"	100.00'	17.18'	34.03'
139	40°10'00"	60.00'	21.94'	42.06'
140	36°00'00"	50.00'	16.26'	31.42'
141	21°10'00"	100.00'	18.68'	36.94'
142	11°48'00"	200.00'	20.81'	41.07'
143	43°48'00"	50.00'	24.12'	45.87'
144	23°10'00"	80.00'	16.40'	32.35'
145	20°40'00"	150.00'	27.35'	54.10'
146	19°20'00"	100.00'	17.03'	33.74'
147	45°50'00"	50.00'	21.14'	40.00'
148	30°24'00"	80.00'	21.74'	42.45'
149	37°59'04"	100.00'	34.42'	66.30'
150	22°42'16"	100.00'	20.08'	39.63'
151	27°20'00"	100.00'	24.32'	47.71'
152	16°30'00"	110.00'	15.95'	31.68'
153	7°34'00"	300.00'	19.84'	39.62'
154	5°30'00"	500.00'	24.02'	48.00'
155	129°30'00"	25.00'	63.01'	56.50'
156	24°00'00"	80.00'	17.00'	33.51'
157	38°40'00"	50.00'	17.54'	33.74'
158	4°20'00"	500.00'	18.92'	37.82'
159	33°00'00"	80.00'	23.70'	46.08'
160	48°22'00"	40.00'	17.96'	33.77'
161	31°18'00"	60.00'	16.81'	32.78'
162	28°10'00"	60.00'	15.05'	29.50'
163	21°52'42"	120.00'	23.19'	45.82'
164	21°07'06"	99.58'	18.56'	36.70'
165	14°52'00"	150.00'	19.57'	38.92'
166	10°04'00"	200.00'	17.62'	35.14'
167	26°54'00"	100.00'	23.92'	46.95'
168	18°30'00"	200.00'	32.67'	64.56'
169	12°52'00"	200.00'	22.55'	44.91'

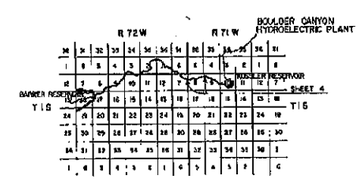

NOTES

1) BEARINGS ARE BASED UPON THE COLORADO STATE PLANE COORDINATE GRID

2) COLORADO STATE PLANE COORDINATES SHOWN ARE MODIFIED TO THE PROJECT MEAN ELEVATION (6,000') BY USING A COMBINED FACTOR OF (0.9999847 X 0.9998117) FROM THE POINT OF ORIGIN, NORTH ZONE

3) SECTION LINES AND PROPERTY LINES ARE PROJECTED FROM RECOVERED SECTION CORNERS LOCATED BY PHOTOGRAMMETRIC METHODS

4) ⊙=RECOVERED B.L.M. BRASS CAP

5) 5.21 ACRES OF LAND WITHIN PROJECT BOUNDARY ON SH 4 OF 15 3.05 ACRES OF PRIVATE LAND, 3.16 ACRES OF U.S.F.S. LAND

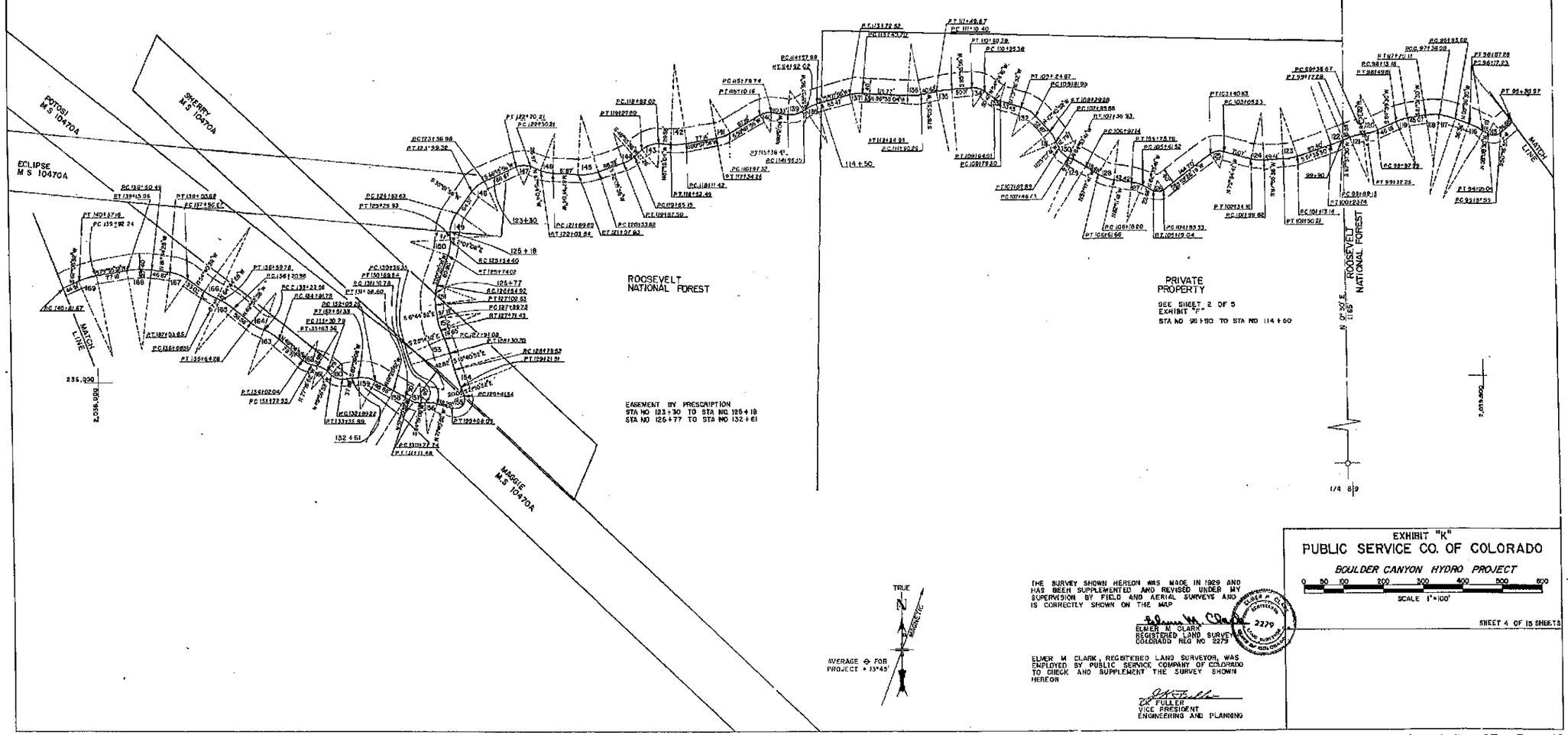

THE SURVEY SHOWN HEREON WAS MADE IN 1929 AND HAS BEEN SUPPLEMENTED AND REVISED UNDER MY SUPERVISION BY FIELD AND AERIAL SURVEYS AND IS CORRECTLY SHOWN ON THE MAP

ELMER M. CLARK
REGISTERED LAND SURVEYOR
COLORADO REG NO 2279

ELMER M. CLARK, REGISTERED LAND SURVEYOR, WAS EMPLOYED BY PUBLIC SERVICE COMPANY OF COLORADO TO CHECK AND SUPPLEMENT THE SURVEY SHOWN HEREON

D.C. FULLER
VICE PRESIDENT
ENGINEERING AND PLANNING

EXHIBIT "K"

PUBLIC SERVICE CO. OF COLORADO

BOULDER CANYON HYDRO PROJECT

0 50 100 200 300 400 500 600

SCALE 1"=100'

SHEET 4 OF 15 SHEETS

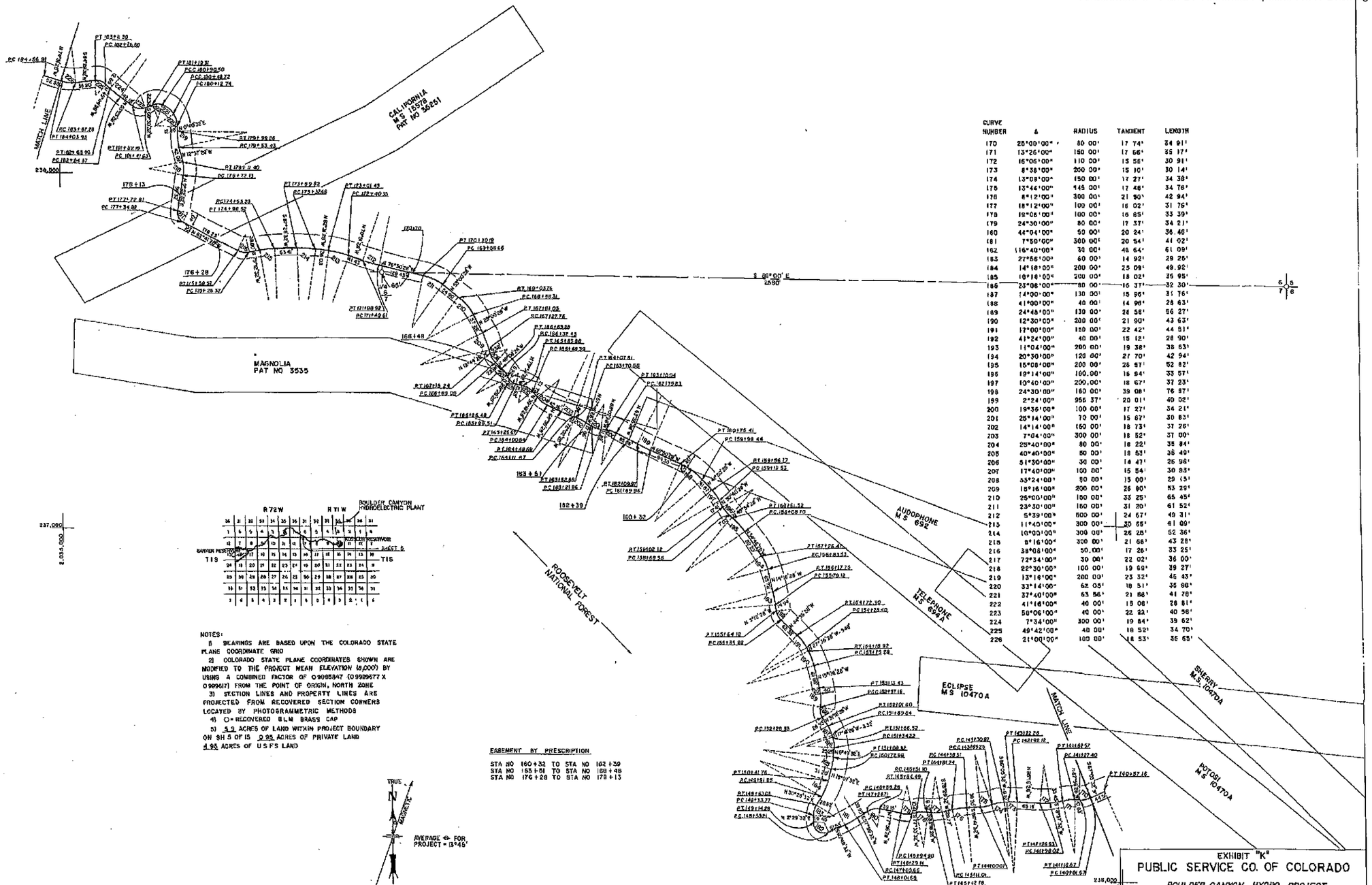

CURVE NUMBER	Δ	RADIUS	TANGENT	LENGTH
170	25°00'00"	80 00'	17 74'	34 91'
171	13°26'00"	150 00'	17 66'	35 17'
172	16°06'00"	110 00'	15 56'	30 91'
173	8°38'00"	200 00'	15 10'	30 14'
174	13°08'00"	150 00'	17 27'	34 38'
175	13°44'00"	145 00'	17 46'	34 76'
176	8°12'00"	300 00'	21 90'	42 94'
177	18°12'00"	100 00'	16 02'	31 76'
178	19°06'00"	100 00'	16 85'	33 39'
179	24°30'00"	80 00'	17 37'	34 21'
180	44°04'00"	50 00'	20 24'	38.46'
181	7°50'00"	300 00'	20 54'	41 02'
182	116°40'00"	30 00'	46 64'	61 09'
183	27°56'00"	60 00'	14 92'	29 25'
184	14°18'00"	200 00'	25 09'	49.92'
185	10°18'00"	200 00'	18 02'	35 95'
186	23°06'00"	80 00'	16 37'	32 30'
187	14°00'00"	130 00'	15 96'	31 76'
188	41°00'00"	40 00'	14 96'	28 63'
189	24°48'00"	130 00'	28 58'	56 27'
190	12°30'00"	200 00'	21 90'	43 62'
191	12°00'00"	150 00'	22 42'	44 51'
192	41°24'00"	40 00'	15 12'	28 90'
193	11°04'00"	200 00'	19 38'	38 63'
194	20°30'00"	120 00'	27 70'	42 94'
195	15°08'00"	200 00'	26 97'	52 82'
196	19°14'00"	100.00'	16 94'	33 57'
197	10°40'00"	200.00'	18 67'	37 23'
198	24°30'00"	180 00'	39 08'	76 97'
199	2°24'00"	955 37'	20 01'	40 02'
200	19°36'00"	100 00'	17 27'	34 21'
201	25°14'00"	70 00'	15 67'	30 83'
202	14°14'00"	150 00'	18 73'	37 26'
203	7°04'00"	300 00'	18 52'	37 00'
204	25°40'00"	80 00'	18 22'	35 84'
205	40°40'00"	50 00'	18 63'	36 49'
206	51°30'00"	30 00'	14 47'	26 96'
207	17°40'00"	100 00'	15 54'	30 83'
208	33°24'00"	50 00'	15 00'	29 15'
209	18°16'00"	200 00'	26 90'	53 29'
210	26°00'00"	100 00'	33 25'	65 45'
211	23°30'00"	150 00'	31 20'	61 52'
212	5°39'00"	500 00'	24 67'	49 31'
213	11°40'00"	300 00'	30 55'	61 09'
214	10°00'00"	300 00'	26 25'	52 36'
215	8°16'00"	300 00'	21 68'	43 28'
216	38°08'00"	50.00'	17 26'	33 25'
217	72°34'00"	30 00'	22 02'	36 00'
218	22°30'00"	100 00'	19 69'	39 27'
219	13°16'00"	200 00'	23 32'	46 43'
220	33°14'00"	62 05'	18 51'	35 98'
221	37°40'00"	63 56'	21 68'	41 78'
222	41°16'00"	40 00'	15 08'	28 81'
223	56°06'00"	40 00'	22 22'	40 56'
224	7°34'00"	300 00'	19 84'	39 62'
225	49°42'00"	40 00'	18 52'	34 70'
226	21°00'00"	100 00'	18 53'	36 65'

NOTES:

1) BEARINGS ARE BASED UPON THE COLORADO STATE PLANE COORDINATE GRID

2) COLORADO STATE PLANE COORDINATES SHOWN ARE MODIFIED TO THE PROJECT MEAN ELEVATION (8,000') BY USING A COMBINED FACTOR OF 0.9985847 (0.9999677 X 0.999517) FROM THE POINT OF ORIGIN, NORTH ZONE

3) SECTION LINES AND PROPERTY LINES ARE PROJECTED FROM RECOVERED SECTION CORNERS LOCATED BY PHOTOGRAMMETRIC METHODS

4) ⊙ = RECOVERED BLM BRASS CAP

5) 5.9 ACRES OF LAND WITHIN PROJECT BOUNDARY ON SH 5 OF 15 0.95 ACRES OF PRIVATE LAND 4.95 ACRES OF U.S.F.S LAND

EASEMENT BY PRESCRIPTION

STA NO 160+32 TO STA NO 162+39
STA NO 165+61 TO STA NO 168+48
STA NO 176+28 TO STA NO 178+13

THE SURVEY SHOWN HEREON WAS MADE IN 1929 AND HAS BEEN SUPPLEMENTED AND REVISED UNDER MY SUPERVISION BY FIELD AND AERIAL SURVEYS AND IS CORRECTLY SHOWN ON THE MAP

ELMER M. CLARK
REGISTERED LAND SURVEYOR
COLORADO REG NO 8279

ELMER M. CLARK, REGISTERED LAND SURVEYOR, WAS EMPLOYED BY PUBLIC SERVICE COMPANY OF COLORADO TO CHECK AND SUPPLEMENT THE SURVEY SHOWN HEREON

J.K. FULLER
VICE PRESIDENT
ENGINEERING AND PLANNING

EXHIBIT "K"

PUBLIC SERVICE CO. OF COLORADO

BOULDER CANYON HYDRO PROJECT

0 50 100 200 300 400 500 600

SCALE 1" = 100'

SHEET 5 OF 15 SHEETS

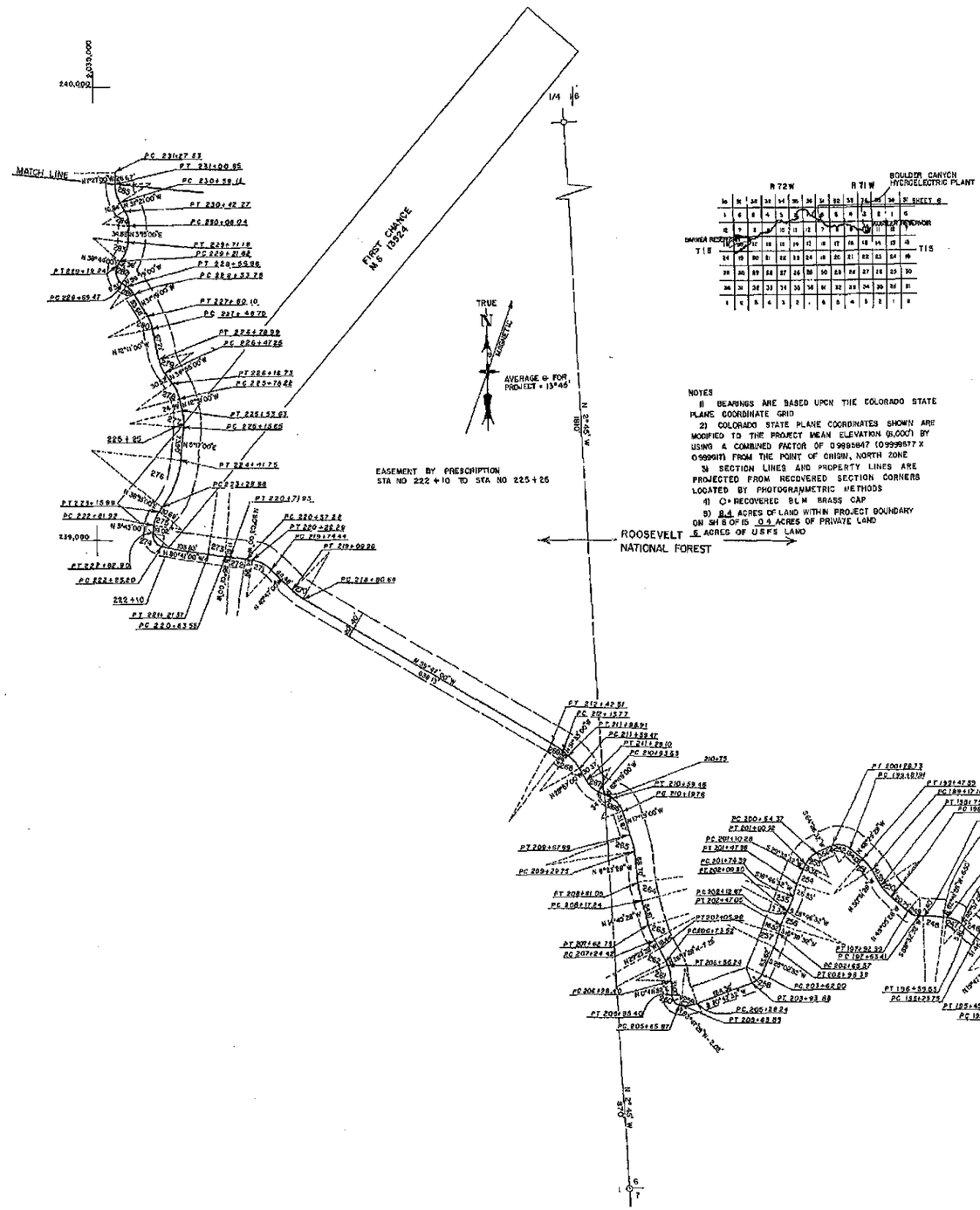

NOTES

1) BEARINGS ARE BASED UPON THE COLORADO STATE PLANE COORDINATE GRID

2) COLORADO STATE PLANE COORDINATES SHOWN ARE MODIFIED TO THE PROJECT MEAN ELEVATION (5,000') BY USING A COMBINED FACTOR OF 0.9995847 (0.9999977 X 0.9999817) FROM THE POINT OF ORIGIN, NORTH ZONE

3) SECTION LINES AND PROPERTY LINES ARE PROJECTED FROM RECOVERED SECTION CORNERS LOCATED BY PHOTOGRAMMETRIC METHODS

4) ⊙ = RECOVERED BLM BRASS CAP

5) 8.4 ACRES OF LAND WITHIN PROJECT BOUNDARY ON SHEETS OF 15 0.4 ACRES OF PRIVATE LAND 6 ACRES OF USFS LAND

CURVE NUMBER	Δ	RADIUS	TANGENT	LENGTH
227	20°20'00"	150.00'	17.93'	35.49'
228	7°30'00"	300.00'	19.55'	39.27'
229	13°40'00"	150.00'	17.98'	35.78'
230	11°50'00"	200.00'	20.73'	41.31'
231	13°30'00"	150.00'	17.75'	35.34'
232	11°50'00"	200.00'	20.73'	41.31'
233	58°40'00"	30.00'	16.65'	30.72'
234	46°40'00"	40.00'	17.25'	32.58'
235	15°34'00"	120.00'	16.40'	32.60'
236	12°26'00"	150.00'	16.34'	32.55'
237	8°14'00"	300.00'	21.59'	43.11'
238	55°20'00"	30.00'	15.73'	28.97'
239	4°14'00"	600.00'	15.48'	36.94'
240	23°24'00"	100.00'	20.71'	40.84'
241	20°00'00"	100.00'	17.83'	34.91'
242	63°06'00"	30.00'	18.42'	33.04'
243	29°50'00"	100.00'	26.64'	52.07'
244	72°40'00"	30.00'	22.06'	38.05'
245	37°00'00"	70.00'	23.42'	45.20'
246	6°50'00"	300.00'	17.91'	35.78'
247	36°44'00"	60.00'	19.92'	38.47'
248	8°46'00"	300.00'	23.00'	45.90'
249	42°22'00"	40.00'	15.60'	28.58'
250	18°14'00"	100.00'	16.06'	31.82'
251	17°38'00"	100.00'	15.51'	30.76'
252	67°04'00"	40.00'	26.81'	46.82'
253	34°54'00"	60.00'	18.85'	36.55'
254	10°46'00"	200.00'	18.85'	37.58'
255	10°00'00"	200.00'	17.50'	34.91'
256	13°08'00"	150.00'	17.27'	34.38'
257	9°24'00"	200.00'	16.44'	32.91'
258	45°40'00"	40.00'	16.84'	31.88'
259	25°30'00"	80.00'	18.10'	35.60'
260	84°38'00"	20.00'	16.20'	29.53'
261	27°06'00"	80.00'	19.28'	37.84'
262	3°06'00"	600.00'	16.24'	32.46'
263	14°38'00"	150.00'	19.26'	38.31'
264	8°22'00"	300.00'	21.94'	43.81'
265	10°55'32"	200.00'	19.13'	38.14'
266	45°30'00"	50.00'	20.97'	39.71'
267	33°52'00"	60.00'	18.27'	35.46'
268	22°32'00"	100.00'	19.98'	39.44'
269	8°14'00"	200.00'	14.40'	28.74'
270	14°00'00"	120.00'	14.73'	29.32'
271	34°16'00"	80.00'	24.56'	47.84'
272	4°38'00"	400.00'	17.36'	34.67'
273	4°20'00"	500.00'	18.92'	37.82'
274	86°24'00"	25.00'	23.48'	37.70'
275	32°32'00"	50.00'	17.50'	34.07'
276	32°58'00"	200.00'	59.18'	115.08'
277	18°08'00"	120.00'	19.15'	37.99'
278	22°04'00"	100.00'	19.50'	38.51'
279	22°44'00"	80.00'	16.06'	31.74'
280	19°08'00"	100.00'	16.95'	33.39'
281	25°00'00"	60.00'	13.30'	26.18'
282	95°03'00"	30.00'	32.77'	49.77'
283	35°29'00"	80.00'	25.50'	49.54'
284	34°36'00"	60.00'	18.69'	36.23'
285	29°54'00"	80.00'	21.38'	41.75'

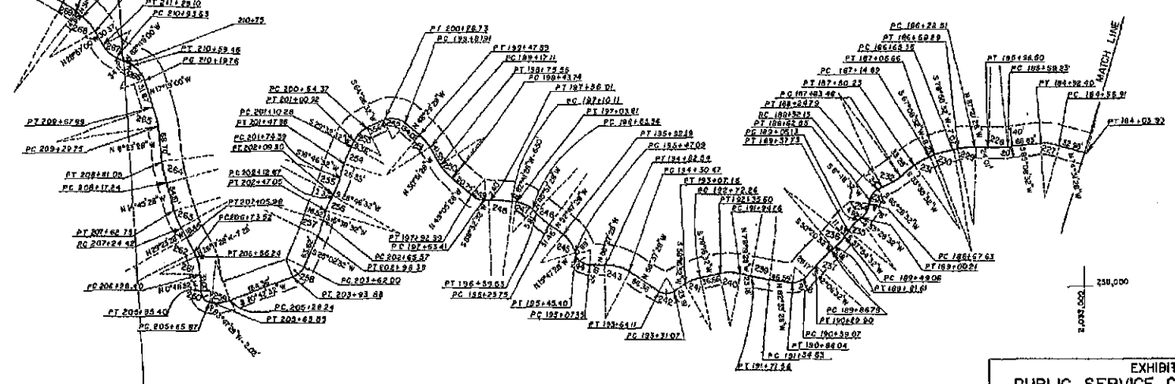

THE SURVEY SHOWN HEREON WAS MADE IN 1929 AND HAS BEEN SUPPLEMENTED AND REVISED UNDER MY SUPERVISION BY FIELD AND AERIAL SURVEYS AND IS CORRECTLY SHOWN ON THE MAP

ELMER M. CLARK
REGISTERED LAND SURVEYOR
COLORADO REG NO 2279

ELMER M CLARK, REGISTERED LAND SURVEYOR, WAS EMPLOYED BY PUBLIC SERVICE COMPANY OF COLORADO TO CHECK AND SUPPLEMENT THE SURVEY SHOWN HEREON

J.H. FULLER
VICE PRESIDENT
ENGINEERING AND PLANNING

EXHIBIT "K"
PUBLIC SERVICE CO. OF COLORADO
BOULDER CANYON HYDRO PROJECT
0 60 100 200 300 400 600 800
SCALE: 1" = 100'
SHEET 6 OF 15 SHEETS

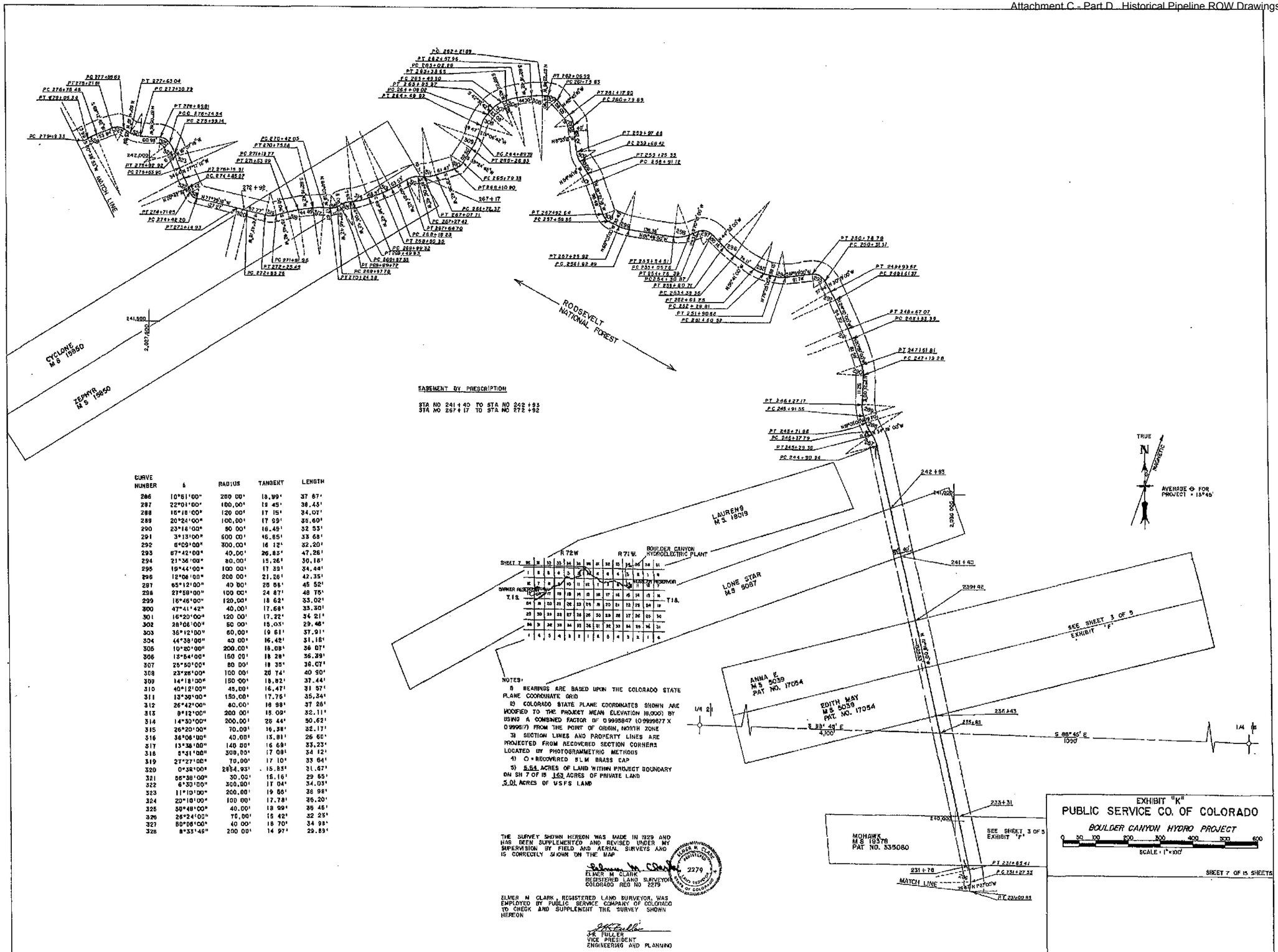

CURVE NUMBER	Δ	RADIUS	TANGENT	LENGTH
286	10°51'00"	200.00'	18.99'	37.87'
287	22°01'00"	100.00'	19.45'	38.43'
288	15°18'00"	120.00'	17.15'	34.07'
289	20°24'00"	100.00'	17.99'	35.60'
290	23°16'00"	80.00'	16.49'	32.53'
291	3°13'00"	600.00'	16.85'	33.68'
292	6°09'00"	300.00'	16.12'	32.20'
293	67°42'00"	40.00'	26.83'	47.26'
294	21°36'00"	80.00'	15.26'	30.16'
295	19°44'00"	100.00'	17.39'	34.44'
296	12°08'00"	200.00'	21.26'	42.35'
297	65°12'00"	40.00'	25.56'	45.52'
298	27°59'00"	100.00'	24.87'	48.75'
299	15°46'00"	120.00'	18.62'	33.02'
300	47°41'42"	40.00'	17.68'	33.30'
301	16°20'00"	120.00'	17.22'	34.21'
302	28°08'00"	60.00'	15.03'	29.46'
303	36°12'00"	60.00'	19.61'	37.91'
304	44°39'00"	40.00'	16.42'	31.16'
305	10°20'00"	200.00'	18.08'	36.07'
306	13°54'00"	150.00'	18.28'	36.39'
307	25°50'00"	80.00'	18.35'	36.07'
308	23°28'00"	100.00'	20.74'	40.90'
309	14°18'00"	150.00'	18.82'	37.44'
310	40°12'00"	45.00'	16.47'	31.57'
311	13°38'00"	150.00'	17.75'	35.34'
312	26°42'00"	80.00'	18.98'	37.26'
313	9°12'00"	200.00'	16.09'	32.11'
314	14°30'00"	200.00'	25.44'	50.62'
315	26°20'00"	70.00'	16.38'	32.17'
316	36°06'00"	40.00'	13.81'	26.60'
317	13°36'00"	140.00'	16.69'	33.23'
318	5°31'00"	300.00'	17.08'	34.12'
319	27°27'00"	70.00'	17.10'	33.64'
320	0°32'00"	2854.93'	15.83'	31.67'
321	55°38'00"	30.00'	15.16'	29.65'
322	6°30'00"	300.00'	17.04'	34.03'
323	11°10'00"	200.00'	19.56'	38.98'
324	20°10'00"	100.00'	17.78'	35.20'
325	50°48'00"	40.00'	18.99'	35.46'
326	26°24'00"	70.00'	16.42'	32.25'
327	50°06'00"	40.00'	18.70'	34.98'
328	8°33'46"	200.00'	14.97'	29.89'

NOTES:

1) BEARINGS ARE BASED UPON THE COLORADO STATE PLANE COORDINATE GRID

2) COLORADO STATE PLANE COORDINATES SHOWN ARE MODIFIED TO THE PROJECT MEAN ELEVATION (8,000) BY USING A COMBINED FACTOR OF 0.9998847 (0.9999677 X 0.999917) FROM THE POINT OF ORIGIN, NORTH ZONE

3) SECTION LINES AND PROPERTY LINES ARE PROJECTED FROM RECOVERED SECTION CORNERS LOCATED BY PHOTOGRAMMETRIC METHODS

4) ○ = RECOVERED B.L.M. BRASS CAP

5) 5.54 ACRES OF LAND WITHIN PROJECT BOUNDARY ON SH 7 OF 15 163 ACRES OF PRIVATE LAND
5.01 ACRES OF U.S.F.S. LAND

THE SURVEY SHOWN HEREON WAS MADE IN 1929 AND HAS BEEN SUPPLEMENTED AND REVISED UNDER MY SUPERVISION BY FIELD AND AERIAL SURVEYS AND IS CORRECTLY SHOWN ON THE MAP

ELMER M. CLARK
REGISTERED LAND SURVEYOR
COLORADO REG NO 2279

ELMER M. CLARK, REGISTERED LAND SURVEYOR, WAS EMPLOYED BY PUBLIC SERVICE COMPANY OF COLORADO TO CHECK AND SUPPLEMENT THE SURVEY SHOWN HEREON

J.R. FULLER
VICE PRESIDENT
ENGINEERING AND PLANNING

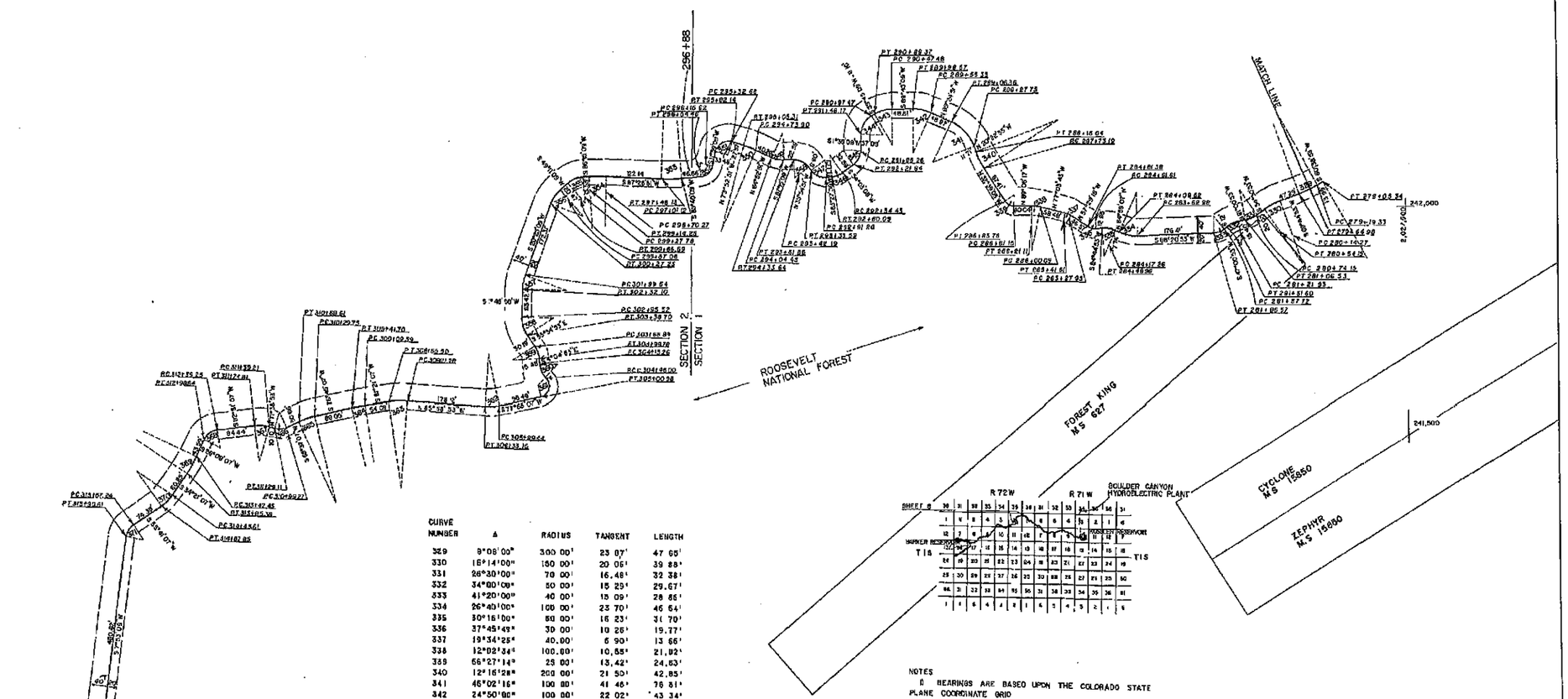

CURVE NUMBER	Δ	RADIUS	TANGENT	LENGTH
329	9°08'00"	300.00'	23.87'	47.65'
330	18°14'00"	150.00'	20.06'	39.88'
331	26°30'00"	70.00'	16.48'	32.38'
332	34°00'00"	50.00'	15.29'	29.67'
333	41°20'00"	40.00'	15.09'	28.85'
334	26°45'00"	100.00'	23.70'	46.64'
335	30°16'00"	60.00'	16.23'	31.70'
336	37°45'42"	30.00'	10.26'	19.77'
337	19°34'25"	40.00'	6.90'	13.66'
338	12°02'34"	100.00'	10.55'	21.02'
339	56°27'14"	25.00'	13.42'	24.63'
340	12°16'28"	200.00'	21.50'	42.85'
341	46°02'16"	100.00'	41.46'	78.81'
342	24°50'00"	100.00'	22.02'	43.34'
343	30°00'00"	80.00'	21.44'	41.89'
344	58°05'08"	50.00'	27.77'	50.70'
345	62°24'00"	40.00'	19.66'	36.58'
346	29°24'00"	50.00'	15.12'	25.66'
347	80°38'00"	40.00'	23.39'	42.33'
348	55°50'00"	40.00'	21.64'	38.97'
349	27°52'00"	60.00'	14.69'	29.18'
350	9°00'00"	200.00'	15.74'	31.42'
351	94°28'00"	30.00'	32.44'	49.46'
352	74°10'00"	30.00'	22.69'	38.83'
353	6°44'00"	400.00'	23.53'	47.01'
354	6°19'00"	400.00'	22.01'	43.96'
355	37°04'00"	60.00'	20.12'	38.82'
356	28°46'00"	80.00'	20.52'	40.17'
357	18°39'11"	100.00'	16.42'	32.56'
358	35°20'51"	70.00'	22.30'	43.18'
359	29°30'00"	60.00'	15.80'	30.49'
360	44°01'00"	40.00'	16.17'	30.73'
361	125°01'00"	25.00'	49.06'	54.98'
362	16°05'00"	120.00'	16.97'	33.72'
363	12°40'00"	200.00'	22.20'	44.22'
364	4°36'00"	400.00'	16.07'	32.11'
365	11°05'00"	200.00'	19.49'	38.85'
366	42°44'00"	40.00'	15.65'	29.83'
367	25°30'00"	60.00'	18.10'	35.60'
368	56°42'00"	40.00'	21.58'	39.58'
369	6°12'00"	300.00'	21.60'	42.94'
370	21°20'00"	100.00'	18.84'	37.23'
371	47°47'53"	40.00'	17.72'	33.37'
372	37°00'00"	60.00'	15.73'	32.29'
373	27°41'14"	50.00'	12.32'	24.16'
374	41°24'11"	40.00'	15.12'	28.90'
375	5°32'00"	300.00'	17.12'	34.21'
376	24°20'00"	70.00'	15.03'	29.73'
377	28°12'00"	60.00'	15.07'	29.53'
378	18°34'26"	200.00'	32.70'	64.84'
379	19°21'49"	50.00'	8.08'	16.02'
380	15°23'28"	70.00'	9.45'	18.80'
381	101°04'00"	24.83'	30.17'	43.81'
382	10°40'00"	101.32'	9.46'	18.86'
383	25°00'00"	70.00'	15.52'	30.54'
384	7°42'00"	300.00'	20.19'	40.32'
385	8°09'00"	300.00'	20.98'	41.69'
386	8°46'00"	200.00'	15.33'	30.60'
387	9°52'00"	200.00'	16.66'	33.28'
388	9°24'00"	200.00'	16.44'	32.81'

NOTES

1) BEARINGS ARE BASED UPON THE COLORADO STATE PLANE COORDINATE GRID

2) COLORADO STATE PLANE COORDINATES SHOWN ARE MODIFIED TO THE PROJECT MEAN ELEVATION (8,000') BY USING A COMBINED FACTOR OF 0.9996047 (0.9999077 X 0.9996971) FROM THE POINT OF ORIGIN, NORTH ZONE

3) SECTION LINES AND PROPERTY LINES ARE PROJECTED FROM RECOVERED SECTION CORNERS LOCATED BY PHOTOGRAMMETRIC METHODS

4) 73.1 ACRES OF LAND WITHIN PROJECT BOUNDARY ON SH 8 OF 15, ALL IS U.S.F.S. LAND

TRUE N

MAGNETIC

AVERAGE ⊖ FOR PROJECT = 13°45"

THE SURVEY SHOWN HEREON WAS MADE IN 1929 AND HAS BEEN SUPPLEMENTED AND REVISED UNDER MY SUPERVISION BY FIELD AND AERIAL SURVEYS AND IS CORRECTLY SHOWN ON THE MAP

ELMER M. CLARK
REGISTERED LAND SURVEYOR
COLORADO REG NO 2279

ELMER M. CLARK, REGISTERED LAND SURVEYOR, WAS EMPLOYED BY PUBLIC SERVICE COMPANY OF COLORADO TO CHECK AND SUPPLEMENT THE SURVEY SHOWN HEREON

J.R. FULLER
VICE PRESIDENT
ENGINEERING AND PLANNING

EXHIBIT "K"

PUBLIC SERVICE CO. OF COLORADO

BOULDER CANYON HYDRO PROJECT

0 50 100 200 300 400 500 600

SCALE 1" = 100'

SHEET 8 OF 15 SHEETS

CURVE NUMBER	Δ	RADIUS	TANGENT	LENGTH
389	17°40'00"	150 00'	23.31'	46.25'
390	14°40'00"	140 00'	18.02'	35 84'
391	61°30'00"	40 00'	23 90'	42 94'
392	92°40'00"	30 00'	31 43'	48 52'
393	40°08'00"	80 00'	29 12'	55 85'
394	13°20'00"	135 00'	15 78'	31 42'
395	88°09'00"	30 00'	29 05'	46 15'
396	27°56'00"	65 00'	18 16'	31 67'
397	60°10'00"	40 00'	23 17'	42 00'
398	28°46'00"	65 38'	16 77'	32 63'
399	39°34'00"	50.00'	17 98'	34.53'
400	25°54'00"	70 00'	16 10'	31.64'
401	55°36'00"	40 00'	21 09'	38 82'
402	3°00'00"	600 00'	16 73'	31 42'
403	31°20'00"	60 00'	18 83'	32 81'
404	32°30'00"	60 00'	17.49'	34 03'
405	13°22'00"	150 00'	17 59'	34 99'
406	20°14'00"	100.00'	17 64'	36.31'
407	4°46'00"	400 00'	16 65'	33.28'
408	9°24'00"	200 00'	16 44'	32 81'
409	15°30'00"	130 00'	17 69'	36.17'
410	15°00'00"	120 00'	16 86'	33 51'
411	14°18'00"	140 00'	17 56'	34 94'
412	36°03'00"	60 00'	16 32'	31 66'
413	17°31'00"	92 00'	14 17'	28 13'
414	39°22'00"	50 00'	17 88'	34 35'
415	84°08'00"	30 00'	27 08'	44 05'
416	28°09'00"	80 00'	20 06'	39 30'
417	59°00'00"	30 00'	16 83'	30 37'
418	8°36'22"	50 00'	3 76'	7 51'
419	86°15'28"	55 36'	42 56'	75.59'
420	47°15'49"	123.46'	54 02'	101 84'
421	10°19'28"	130 00'	11 74'	23.42'
422	17°36'43"	45 00'	6 96'	13 82'
423	38°39'08"	112 62'	39 46'	75 91'
424	14°53'11"	40 00'	5 23'	10 39'
425	16°41'20"	40 00'	5 87'	11 65'

CURVE NUMBER	Δ	RADIUS	TANGENT	LENGTH
426	9°55'12"	40 00'	3 47'	6 93'
427	33°42'34"	105 24'	31 88'	61 92'
428	18°35'31"	80 00'	7 42'	14 79'
429	25°55'03"	323.93'	74 59'	146 62'
430	9°33'09"	200 00'	14 96'	29 85'
431	66°14'03"	30 00'	19 57'	34 66'
432	31°25'02"	70.00'	19 63'	38 28'
433	11°50'00"	160.00'	16 58'	33 04'
434	14°12'00"	140 00'	17 44'	34 70'
435	13°00'00"	150.00'	17 09'	34 03'
436	44°20'00"	50 00'	20 37'	38 69'
437	30°14'00"	110.00'	29 72'	58 04'
438	2°50'00"	955 40'	23 63'	47 25'
439	17°40'00"	100 00'	15.54'	30 85'
440	39°40'00"	60 00'	21.64'	41 54'
441	31°06'00"	70.00'	19 48'	38 00'
442	11°40'00"	200.00'	20.43'	40 72'
443	16°00'00"	150 00'	21 08'	41.89'
444	6°18'00"	300 00'	16.51'	32 99'
445	11°30'00"	150 00'	15.10'	30 11'
446	5°04'00"	400 00'	17.70'	35 37'
447	8°06'00"	300 00'	21 24'	42 41'

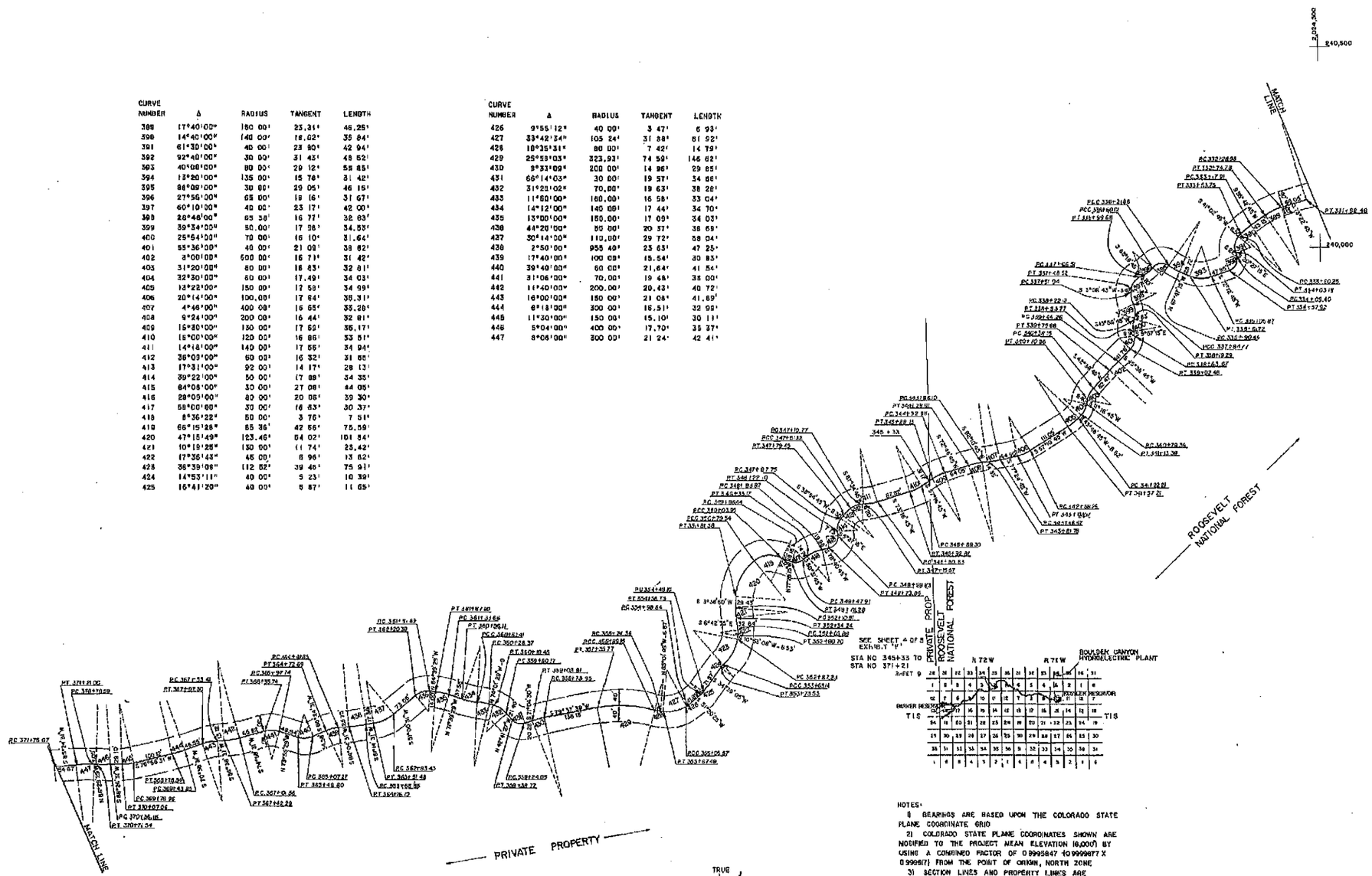

NOTES:

1) BEARINGS ARE BASED UPON THE COLORADO STATE PLANE COORDINATE GRID

2) COLORADO STATE PLANE COORDINATES SHOWN ARE MODIFIED TO THE PROJECT MEAN ELEVATION 10,000' BY USING A COMBINED FACTOR OF 0.9995847 X 0.9999977 X 0.999817 FROM THE POINT OF ORIGIN, NORTH ZONE

3) SECTION LINES AND PROPERTY LINES ARE PROJECTED FROM RECOVERED SECTION CORNERS LOCATED BY PHOTOGRAMMETRIC METHODS

4) 8.85 ACRES OF LAND WITHIN PROJECT BOUNDARY ON SH 9 OF 15 4.85 ACRES OF PRIVATE LAND 1.0 ACRES OF USFS LAND

THE SURVEY SHOWN HEREON WAS MADE IN 1929 AND HAS BEEN SUPPLEMENTED AND REVISED UNDER MY SUPERVISION BY FIELD AND AERIAL SURVEYS AND IS CORRECTLY SHOWN ON THE MAP

ELMER M CLARK
REGISTERED LAND SURVEYOR
COLORADO REG NO 2279

ELMER M CLARK, REGISTERED LAND SURVEYOR, WAS EMPLOYED BY PUBLIC SERVICE COMPANY OF COLORADO TO CHECK AND SUPPLEMENT THE SURVEY SHOWN HEREON

K PULLER
VICE PRESIDENT
ENGINEERING AND PLANNING

EXHIBIT "K"

PUBLIC SERVICE CO. OF COLORADO

BOULDER CANYON HYDRO PROJECT

0 50 100 200 300 400 500 600

SCALE 1"=100'

SHEET 9 OF 15 SHEETS

CURVE NUMBER	Δ	RADIUS	TANGENT	LENGTH
448	83°40'00"	35.00'	31.33'	51 11'
449	14°14'00"	140.00'	17 48'	34 78'
450	5°47'00"	400 00'	20 20'	40.38'
451	8°47'15"	250 00'	19 21'	38.34'
452	15°30'00"	130 00'	17 69'	35 17'
453	12°34'00"	150 00'	16 52'	32 90'
454	15°36'00"	500 00'	68.49'	136 14'
455	28°12'00"	72 00'	18 08'	35.44'
456	10°27'40"	200 00'	18.31'	35 52'
457	18°56'55"	100.00'	16 69'	33 07'
458	21°44'00"	90 00'	17 26'	34 14'
459	15°10'00"	120 00'	17.04'	33.86'
460	25°05'00"	80 00'	17 81'	35 05'
461	86°15'00"	30 00'	26.11'	45 17'
462	18°24'00"	100 00'	16 20'	32.13'
463	5°30'22"	300 00'	14 43'	28.83'
464	4°50'57"	300 00'	12.70'	25 39'
465	33°27'25"	150 00'	45 05'	87 69'
466	18°23'56"	100 00'	16 20'	32 11'
467	25°27'47"	100 00'	22 59'	44.44'
468	17°35'06"	100 00'	15 47'	30.69'
469	49°12'45"	40 00'	16 32'	34 36'
470	64°50'49"	30 00'	19.06'	33 95'
471	0°43'11"	300 00'	1 88'	3 77'
472	11°31'51"	200 00'	20 19'	40 25'
473	17°53'53"	150 00'	23.52'	46 85'
474	60°30'41"	40 00'	23 33'	42 24'
475	6°09'33"	297 84'	16.02'	32 02'
476	5°30'00"	400 00'	19.21'	38 40'
477	25°24'00"	100 00'	22 54'	44 33'
478	47°50'00"	80.00'	35 20'	66 32'
479	20°04'31"	100 00'	17 70'	35 04'
480	14°40'31"	150 00'	19 32'	38 42'
481	7°18'00"	300 00'	19.14'	38 22'
482	7°47'02"	300 00'	20.41'	40 75'
483	8°34'33"	200 00'	15.00'	29 94'
484	22°14'00"	100 00'	19 65'	38 80'
485	46°56'00"	50 00'	21 71'	40 95'
486	12°44'00"	150 00'	16 74'	33 34'
487	7°50'00"	300 00'	20 94'	41 02'
488	59°30'00"	40 00'	22 86'	41 54'
489	29°00'00"	60 00'	15 52'	30.37'
490	17°00'04"	100 00'	14 98'	29.67'
491	13°41'56"	150 00'	18 02'	35 87'

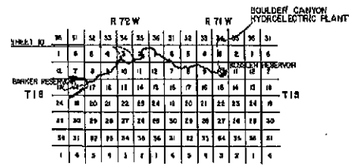

NOTES

1) BEARINGS ARE BASED UPON THE COLORADO STATE PLANE COORDINATE GRID

2) COLORADO STATE PLANE COORDINATES SHOWN ARE MODIFIED TO THE PROJECT MEAN ELEVATION (8,000') BY USING A COMBINED FACTOR OF 0.9995847 (0.9999677 X 0.9996817) FROM THE POINT OF ORIGIN, NORTH ZONE

3) SECTION LINES AND PROPERTY LINES ARE PROJECTED FROM RECOVERED SECTION CORNERS LOCATED BY PHOTOGRAMMETRIC METHODS

4) ⊙ = RECOVERED G.L.O. BRASS CAP

5) 9.8 ACRES OF LAND WITHIN PROJECT BOUNDARY ON SHEETS 10 OF 15, ALL OF WHICH IS PRIVATE LAND

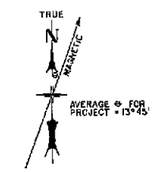

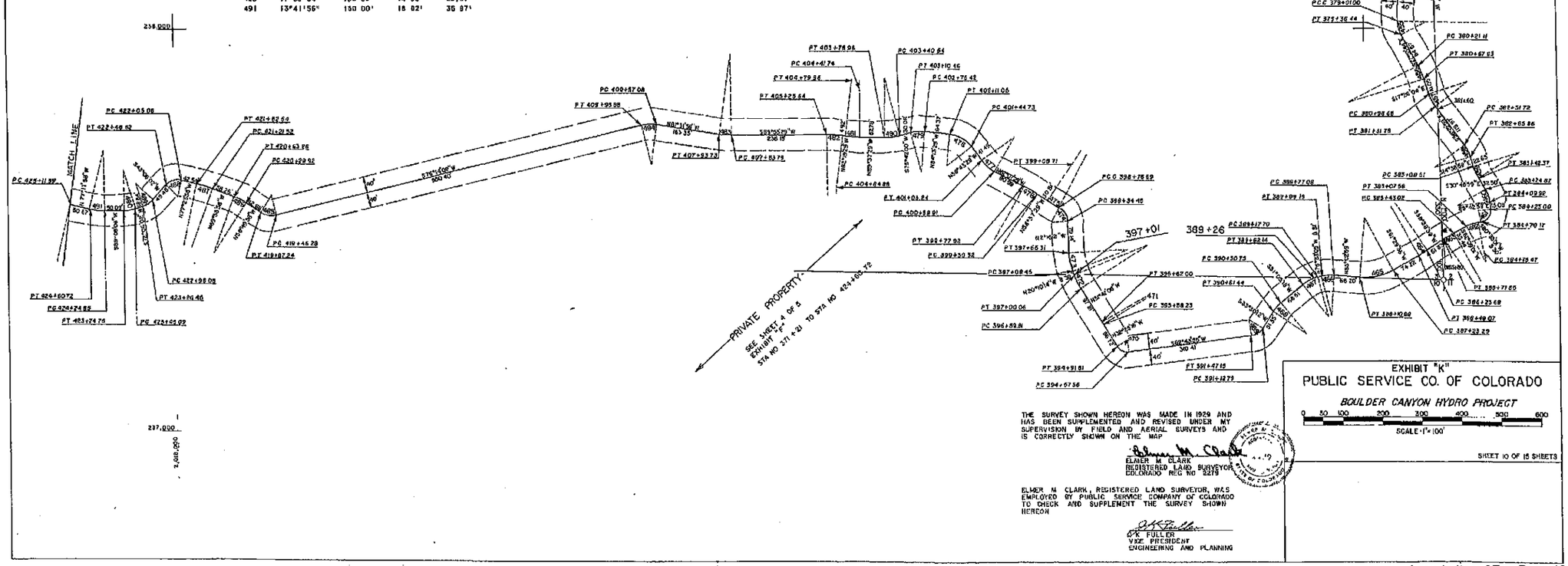

THE SURVEY SHOWN HEREON WAS MADE IN 1929 AND HAS BEEN SUPPLEMENTED AND REVISED UNDER MY SUPERVISION BY FIELD AND AERIAL SURVEYS AND IS CORRECTLY SHOWN ON THE MAP

ELMER M. CLARK
REGISTERED LAND SURVEYOR
COLORADO REG NO 2279

ELMER M. CLARK, REGISTERED LAND SURVEYOR, WAS EMPLOYED BY PUBLIC SERVICE COMPANY OF COLORADO TO CHECK AND SUPPLEMENT THE SURVEY SHOWN HEREON

O.K. FULLER
VICE PRESIDENT
ENGINEERING AND PLANNING

EXHIBIT "K"
PUBLIC SERVICE CO. OF COLORADO
BOULDER CANYON HYDRO PROJECT
0 50 100 200 300 400 500 600
SCALE 1"=100'

SHEET 10 OF 15 SHEETS

CURVE NUMBER	Δ	RADIUS	TANGENT	LENGTH
492	7°44'00"	300.00'	20.28'	40.49'
493	9°40'00"	200.00'	16.91'	33.74'
494	8°10'00"	200.00'	16.03'	32.00'
495	15°30'00"	150.00'	20.41'	40.58'
496	3°20'00"	600.00'	17.46'	34.91'
497	19°54'00"	100.00'	17.54'	34.73'
498	51°45'41"	80.00'	38.83'	72.30'
499	20°34'00"	100.00'	18.14'	36.90'
500	26°54'00"	60.00'	15.46'	30.26'
501	29°03'00"	60.00'	15.52'	30.37'
502	66°00'00"	30.00'	19.48'	34.56'
503	17°18'00"	100.00'	15.21'	30.19'
504	60°50'00"	40.00'	23.48'	42.47'
505	19°06'00"	100.00'	16.82'	33.34'
506	13°54'00"	150.00'	18.28'	36.39'
507	18°46'00"	100.00'	17.42'	34.50'
508	15°34'00"	120.00'	16.40'	32.60'
509	18°00'00"	100.00'	15.84'	31.42'
510	32°36'00"	60.00'	17.54'	34.14'
511	21°20'00"	100.00'	18.84'	37.23'
512	13°42'00"	150.00'	16.02'	35.87'
513	7°58'00"	245.00'	17.06'	34.07'
514	29°50'00"	60.00'	20.56'	40.26'
515	13°20'00"	150.00'	17.53'	34.91'
516	7°10'20"	110.00'	6.89'	13.77'
517	28°16'09"	60.00'	20.15'	39.47'
518	42°59'02"	150.00'	17.07'	33.99'
519	26°13'46"	100.00'	23.30'	45.78'
520	13°39'50"	100.00'	11.98'	23.85'
521	99°03'53"	25.00'	29.50'	43.22'
522	41°24'00"	40.00'	15.12'	28.90'
523	3°55'00"	500.00'	17.17'	34.32'
524	50°04'00"	60.00'	28.02'	52.43'
525	17°16'00"	100.00'	15.18'	30.14'
526	6°20'00"	300.00'	15.50'	33.16'
527	15°08'00"	150.00'	19.93'	39.62'
528	41°24'00"	40.00'	15.12'	28.90'
529	39°54'00"	60.00'	21.78'	41.78'
530	45°07'53"	60.00'	22.96'	42.88'
531	40°25'12"	50.00'	18.41'	35.27'
532	34°48'00"	60.00'	15.67'	30.37'

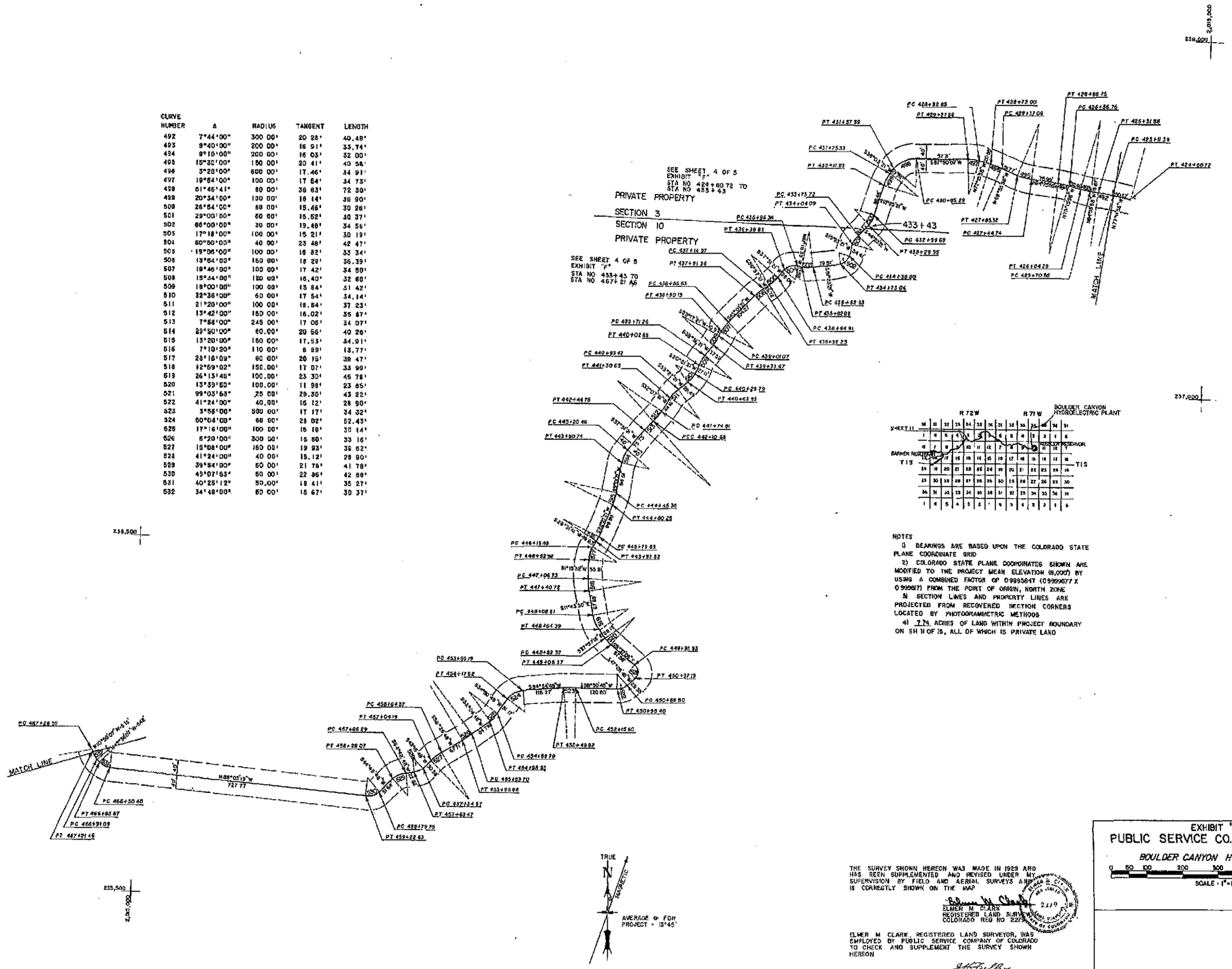

NOTES

1) BEARINGS ARE BASED UPON THE COLORADO STATE PLANE COORDINATE GRID

2) COLORADO STATE PLANE COORDINATES SHOWN ARE MODIFIED TO THE PROJECT MEAN ELEVATION (8,000') BY USING A COMBINED FACTOR OF 0.9995647 (0.9999677 X 0.999967) FROM THE POINT OF ORIGIN, NORTH ZONE

3) SECTION LINES AND PROPERTY LINES ARE PROJECTED FROM RECOVERED SECTION CORNERS LOCATED BY PHOTOGRAMMETRIC METHODS

4) 7.74 ACRES OF LAND WITHIN PROJECT BOUNDARY ON SH 11 OF 15, ALL OF WHICH IS PRIVATE LAND

THE SURVEY SHOWN HEREON WAS MADE IN 1929 AND HAS BEEN SUPPLEMENTED AND REVISED UNDER MY SUPERVISION BY FIELD AND AERIAL SURVEYS AND IS CORRECTLY SHOWN ON THE MAP

ELMER M. CLARK
REGISTERED LAND SURVEYOR
COLORADO REG NO 2279

ELMER M CLARK, REGISTERED LAND SURVEYOR, WAS EMPLOYED BY PUBLIC SERVICE COMPANY OF COLORADO TO CHECK AND SUPPLEMENT THE SURVEY SHOWN HEREON

O.K. FULLER
VICE PRESIDENT
ENGINEERING AND PLANNING

EXHIBIT "K"

PUBLIC SERVICE CO. OF COLORADO

BOULDER CANYON HYDRO PROJECT

0 50 100 200 300 400 500 1000

SCALE - 1" = 100'

SHEET 11 OF 15 SHEETS

1005-12

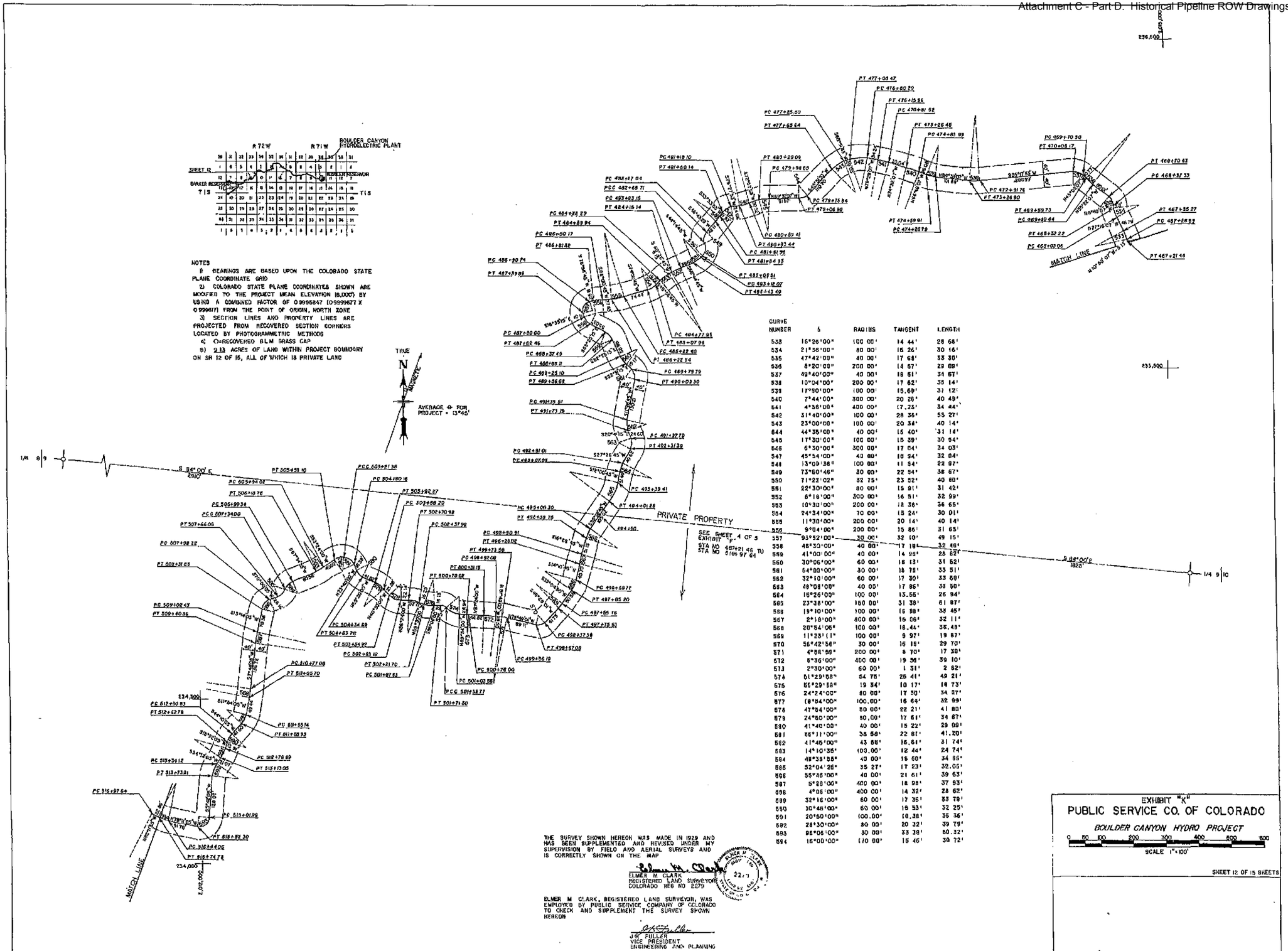

CURVE NUMBER	Δ	RADIUS	TANGENT	LENGTH
533	16°26'00"	100.00'	14.44'	28.68'
534	21°55'00"	80.00'	15.26'	30.16'
535	47°42'00"	40.00'	17.68'	33.30'
536	8°20'00"	200.00'	14.67'	29.09'
537	49°40'00"	40.00'	18.61'	34.67'
538	10°04'00"	200.00'	17.62'	35.14'
539	17°50'00"	100.00'	15.69'	31.12'
540	7°44'00"	300.00'	20.28'	40.49'
541	4°36'00"	400.00'	17.23'	34.44'
542	31°40'00"	100.00'	28.36'	55.27'
543	23°00'00"	100.00'	20.34'	40.14'
544	44°35'00"	40.00'	15.40'	31.14'
545	17°30'00"	100.00'	15.39'	30.54'
546	6°30'00"	300.00'	17.04'	34.03'
547	45°54'00"	40.00'	16.94'	32.04'
548	13°09'36"	100.00'	11.54'	22.92'
549	73°50'46"	30.00'	22.94'	38.67'
550	71°22'02"	32.75'	23.52'	40.80'
551	22°30'00"	80.00'	15.91'	31.42'
552	6°16'00"	300.00'	16.51'	32.99'
553	10°30'00"	200.00'	18.36'	36.65'
554	24°34'00"	70.00'	15.24'	30.01'
555	11°30'00"	200.00'	20.14'	40.14'
556	9°04'00"	200.00'	15.86'	31.65'
557	93°52'00"	30.00'	32.10'	49.15'
558	46°30'00"	40.00'	17.18'	32.46'
559	41°00'00"	40.00'	14.95'	28.62'
560	30°06'00"	60.00'	18.13'	31.52'
561	54°00'00"	30.00'	18.75'	33.51'
562	32°10'00"	60.00'	17.30'	33.69'
563	48°08'00"	40.00'	17.86'	33.60'
564	15°26'00"	100.00'	13.56'	26.94'
565	23°38'00"	150.00'	31.38'	61.87'
566	19°10'00"	100.00'	16.98'	33.45'
567	2°18'00"	800.00'	16.06'	32.11'
568	20°54'06"	100.00'	18.44'	36.48'
569	11°23'11"	100.00'	9.97'	19.87'
570	56°42'58"	30.00'	16.19'	29.70'
571	4°58'59"	200.00'	8.70'	17.39'
572	5°36'00"	400.00'	19.98'	39.10'
573	2°30'00"	60.00'	1.31'	2.62'
574	51°29'58"	54.78'	26.41'	49.21'
575	55°29'58"	19.34'	10.17'	18.73'
576	24°24'00"	80.00'	17.30'	34.07'
577	19°54'00"	100.00'	16.69'	32.99'
578	47°54'00"	50.00'	22.21'	41.80'
579	24°50'00"	50.00'	17.61'	34.67'
580	41°40'00"	40.00'	15.22'	29.09'
581	58°11'00"	38.58'	22.81'	41.20'
582	41°46'00"	43.88'	16.61'	31.74'
583	14°10'35"	100.00'	12.44'	24.74'
584	49°38'55"	40.00'	15.60'	34.65'
585	52°04'26"	35.27'	17.23'	32.05'
586	55°46'00"	40.00'	21.61'	39.63'
587	5°28'00"	400.00'	18.98'	37.93'
588	4°06'00"	400.00'	14.32'	28.62'
589	32°16'00"	60.00'	17.35'	33.79'
590	30°46'00"	60.00'	16.53'	32.25'
591	20°50'00"	100.00'	18.38'	36.36'
592	28°30'00"	80.00'	20.32'	39.79'
593	95°06'00"	30.00'	33.38'	50.32'
594	16°00'00"	110.00'	15.46'	30.72'

THE SURVEY SHOWN HEREON WAS MADE IN 1929 AND HAS BEEN SUPPLEMENTED AND REVISED UNDER MY SUPERVISION BY FIELD AND AERIAL SURVEYS AND IS CORRECTLY SHOWN ON THE MAP

ELMER M CLARK
REGISTERED LAND SURVEYOR
COLORADO REG NO 2279

ELMER M CLARK, REGISTERED LAND SURVEYOR, WAS EMPLOYED BY PUBLIC SERVICE COMPANY OF COLORADO TO CHECK AND SUPPLEMENT THE SURVEY SHOWN HEREON

J.R. FULLER
VICE PRESIDENT
ENGINEERING AND PLANNING

EXHIBIT "K"
PUBLIC SERVICE CO. OF COLORADO
BOULDER CANYON HYDRO PROJECT
0 50 100 200 300 400 500 600
SCALE 1"=100'
SHEET 12 OF 15 SHEETS

CURVE NUMBER	Δ	RADIUS	TANGENT	LENGTH
595	12°44'00"	150 00'	16 74'	33 34'
596	35°22'00"	50 00'	16 94'	30 85'
597	18°14'00"	100 00'	16 05'	31 82'
598	38°29'43"	40 00'	13 97'	26 88'
599	46°32'59"	39 38'	16 83'	31 97'
600	49°51'05"	40 00'	18 59'	34 80'
601	57°24'00"	30 00'	16 48'	30 14'
602	19°48'00"	100 00'	17 46'	34 66'
603	15°54'00"	110 00'	15 36'	30 53'
604	17°16'28"	100 00'	15 19'	30 15'
605	15°07'01"	150 00'	19 90'	39 56'
606	6°03'00"	300 00'	16 72'	31 42'
607	8°50'00"	200 00'	15 45'	30 83'
608	4°00'00"	500 00'	17 46'	34 91'
609	13°20'00"	150 00'	17 53'	34 91'
610	53°19'14"	40 00'	20 08'	37 22'
611	11°26'00"	200 00'	20 02'	38 81'
612	7°34'00"	300 00'	19 64'	39 62'
613	45°24'00"	40 00'	16 73'	31 70'
614	13°36'00"	150 00'	17 89'	35 60'
615	7°02'00"	300 00'	18 44'	36 83'
616	1°59'00"	955 40'	15 29'	30 57'
617	16°40'00"	110 00'	16 11'	32 00'
618	51°34'02"	40 00'	19 32'	36 00'
619	35°23'41"	80 44'	25 67'	49 70'
620	19°28'45"	50 00'	8 58'	17 00'
621	31°02'22"	60 00'	16 66'	32 50'
622	47°19'05"	50 00'	21 91'	41 29'
623	43°06'00"	40 00'	15 92'	30 09'
624	60°04'00"	40 00'	23 12'	41 93'
625	27°10'47"	60 00'	14 59'	28 46'
626	15°00'00"	150.00'	19 75'	39 27'
627	37°42'00"	110 00'	37 55'	72 38'
628	33°04'00"	60 00'	17 81'	34 63'
629	13°12'00"	150 00'	17 35'	34 56'
630	16°33'05"	70 00'	10 19'	20 22'
631	6°34'52"	100 00'	5 75'	11 49'
632	2°53'21"	300 00'	7 56'	15 13'
633	78°40'00"	30 00'	24 58'	41 19'
634	13°20'00"	150 00'	17 53'	34 91'
635	14°00'00"	150 00'	18 42'	36 65'
636	5°38'00"	200 00'	15 10'	30 14'
637	4°44'00"	400 00'	16 53'	33 04'
638	7°54'00"	300 00'	20 72'	41 39'
639	136°50'00"	20 00'	50 56'	47 76'
640	73°04'00"	40 00'	29 84'	51 01'
641	11°54'00"	200 00'	20 84'	41 54'
642	22°10'00"	100 00'	19 59'	38 69'
643	27°10'00"	70 00'	16 91'	33 19'
644	25°30'00"	100 00'	22 63'	44 51'
645	4°02'26"	200 00'	7 06'	14.10'

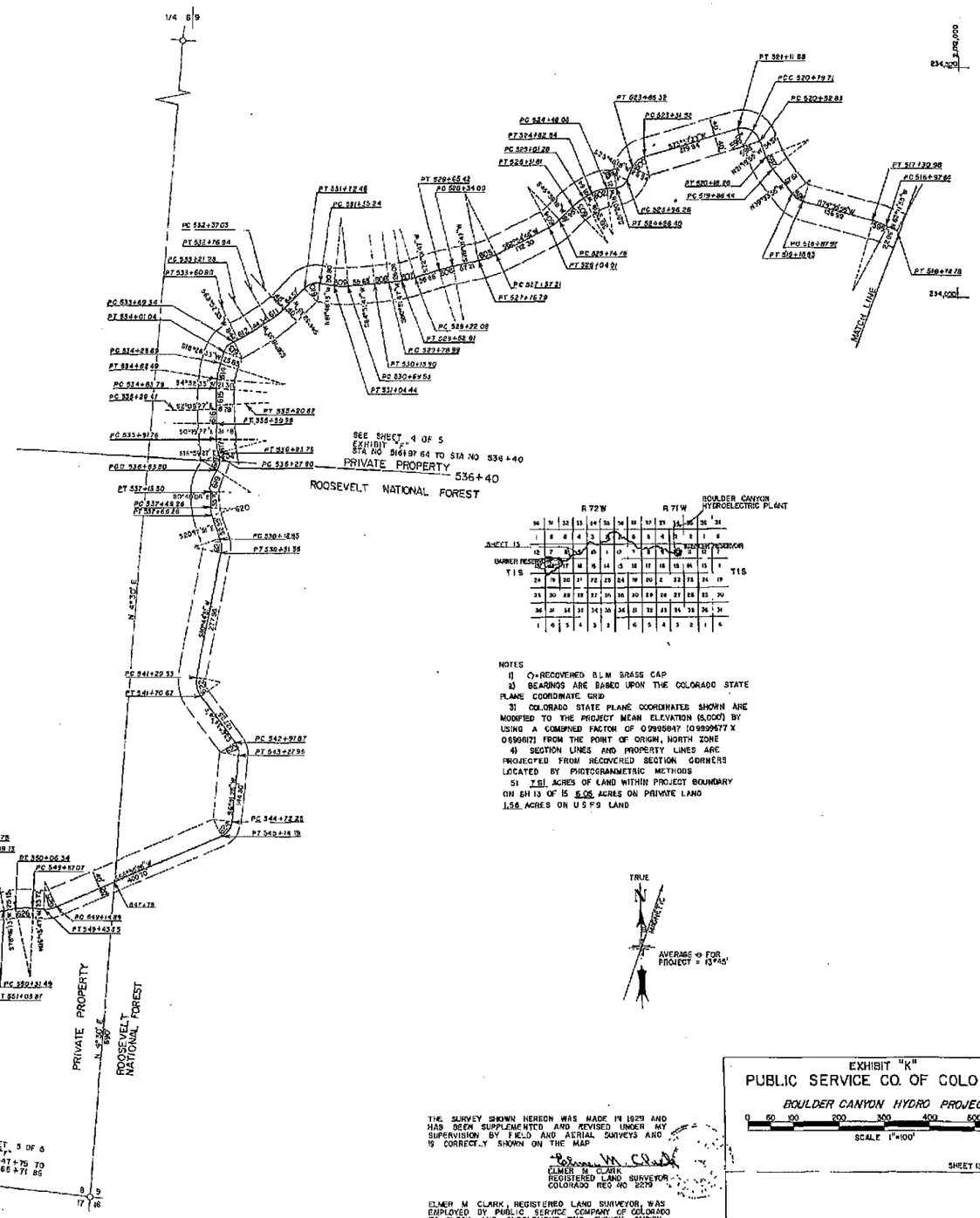

THE SURVEY SHOWN HEREON WAS MADE IN 1929 AND HAS BEEN SUPPLEMENTED AND REVISED UNDER MY SUPERVISION BY FIELD AND AERIAL SURVEYS AND IS CORRECTLY SHOWN ON THE MAP

ELMER M. CLARK
REGISTERED LAND SURVEYOR
COLORADO REG NO 2279

ELMER M. CLARK, REGISTERED LAND SURVEYOR, WAS EMPLOYED BY PUBLIC SERVICE COMPANY OF COLORADO TO CHECK AND SUPPLEMENT THE SURVEY SHOWN HEREON.

J.F. FULLER
VICE PRESIDENT
ENGINEERING AND PLANNING

EXHIBIT "K"
PUBLIC SERVICE CO. OF COLORADO
BOULDER CANYON HYDRO PROJECT
0 50 100 200 300 400 500 600
SCALE 1"=100'
SHEET 13 OF 15 SHEETS

1005-14

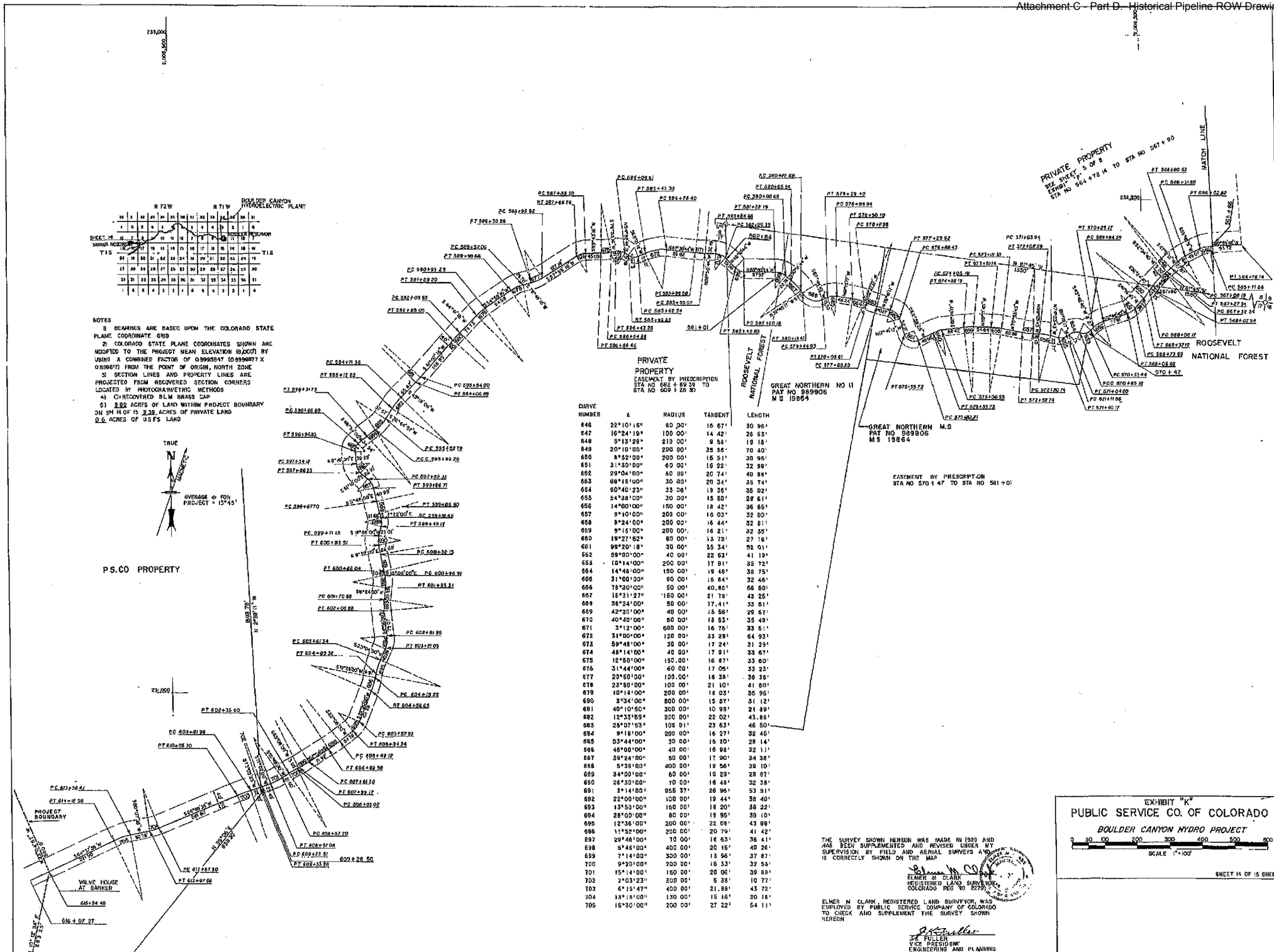

NOTES

1) BEARINGS ARE BASED UPON THE COLORADO STATE PLANE COORDINATE GRID

2) COLORADO STATE PLANE COORDINATES SHOWN ARE MODIFIED TO THE PROJECT MEAN ELEVATION (8,000') BY USING A COMBINED FACTOR OF 0.9999547 (0.9999877 X 0.9996672) FROM THE POINT OF ORIGIN, NORTH ZONE

3) SECTION LINES AND PROPERTY LINES ARE PROJECTED FROM RECOVERED SECTION CORNERS LOCATED BY PHOTOGRAMMETRIC METHODS

4) C=RECOVERED BLM BRASS CAP

5) 9.00 ACRES OF LAND WITHIN PROJECT BOUNDARY (N) SH M OF 15 8.39 ACRES OF PRIVATE LAND 0.6 ACRES OF U.S.F.S LAND

CURVE NUMBER	Δ	RADIUS	TANGENT	LENGTH
646	22°10'15"	80.00'	16.67'	30.96'
647	16°24'19"	100.00'	14.42'	28.63'
648	5°13'28"	210.00'	9.58'	19.15'
649	20°10'00"	200.00'	35.56'	70.40'
650	8°52'00"	200.00'	15.51'	30.95'
651	31°30'00"	60.00'	16.22'	32.98'
652	29°04'00"	60.00'	20.74'	40.88'
653	88°16'00"	30.00'	26.34'	35.74'
654	60°40'23"	33.08'	19.36'	35.02'
655	54°38'00"	30.00'	15.50'	28.61'
656	14°00'00"	150.00'	18.42'	36.65'
657	9°10'00"	200.00'	16.03'	32.00'
658	9°24'00"	200.00'	16.44'	32.81'
659	9°15'00"	200.00'	16.21'	32.35'
660	19°27'52"	80.00'	13.72'	27.18'
661	99°20'18"	30.00'	35.34'	52.01'
662	59°00'00"	40.00'	22.63'	41.19'
663	10°14'00"	200.00'	17.91'	35.72'
664	14°48'00"	150.00'	19.48'	38.75'
665	31°00'00"	80.00'	16.64'	32.46'
666	78°20'00"	50.00'	40.85'	68.50'
667	15°31'27"	160.00'	21.78'	43.25'
668	38°24'00"	50.00'	17.41'	33.51'
669	42°30'00"	40.00'	15.56'	29.67'
670	40°40'00"	50.00'	18.53'	35.49'
671	3°12'00"	600.00'	16.76'	33.61'
672	31°00'00"	120.00'	33.28'	64.93'
673	59°48'00"	30.00'	17.24'	31.29'
674	48°14'00"	40.00'	17.91'	33.67'
675	12°50'00"	150.00'	16.87'	33.60'
676	31°44'00"	60.00'	17.05'	33.23'
677	20°50'00"	100.00'	16.38'	36.36'
678	23°50'00"	100.00'	21.10'	41.60'
679	10°18'00"	200.00'	18.03'	35.96'
680	3°34'00"	800.00'	15.57'	31.12'
681	40°10'50"	300.00'	10.93'	21.89'
682	12°33'59"	200.00'	22.02'	43.86'
683	26°07'53"	105.01'	23.63'	46.50'
684	9°18'00"	200.00'	16.27'	32.46'
685	53°44'00"	30.00'	15.20'	28.14'
686	46°00'00"	40.00'	16.98'	32.11'
687	39°24'00"	50.00'	17.90'	34.38'
688	5°36'00"	400.00'	19.56'	39.10'
689	34°00'00"	60.00'	15.29'	29.67'
690	26°30'00"	70.00'	16.48'	32.38'
691	3°14'00"	955.37'	26.96'	53.91'
692	22°00'00"	100.00'	19.44'	38.40'
693	13°50'00"	150.00'	18.20'	36.22'
694	28°00'00"	80.00'	19.95'	39.10'
695	12°36'00"	200.00'	22.08'	43.99'
696	11°52'00"	200.00'	20.79'	41.42'
697	29°48'00"	70.00'	18.63'	36.41'
698	5°45'00"	400.00'	20.15'	40.26'
699	7°14'00"	300.00'	18.96'	37.87'
700	9°20'00"	200.00'	16.33'	32.56'
701	15°14'00"	150.00'	20.06'	39.89'
702	2°03'23"	300.00'	5.38'	10.77'
703	6°15'47"	400.00'	21.88'	43.72'
704	18°15'00"	130.00'	15.16'	30.16'
705	16°30'00"	200.00'	27.22'	54.11'

THE SURVEY SHOWN HEREON WAS MADE IN 1929 AND HAS BEEN SUPPLEMENTED AND REVISED UNDER MY SUPERVISION BY FIELD AND AERIAL SURVEYS AND IS CORRECTLY SHOWN ON THE MAP

ELMER M CLARK
REGISTERED LAND SURVEYOR
COLORADO REG NO 22790

ELMER M CLARK, REGISTERED LAND SURVEYOR, WAS EMPLOYED BY PUBLIC SERVICE COMPANY OF COLORADO TO CHECK AND SUPPLEMENT THE SURVEY SHOWN HEREON

J.K. FULLER
VICE PRESIDENT
ENGINEERING AND PLANNING

EXHIBIT "K"

PUBLIC SERVICE CO. OF COLORADO

BOULDER CANYON HYDRO PROJECT

0 50 100 200 300 400 500 600

SCALE 1" = 100'

SHEET 14 OF 15 SHEETS

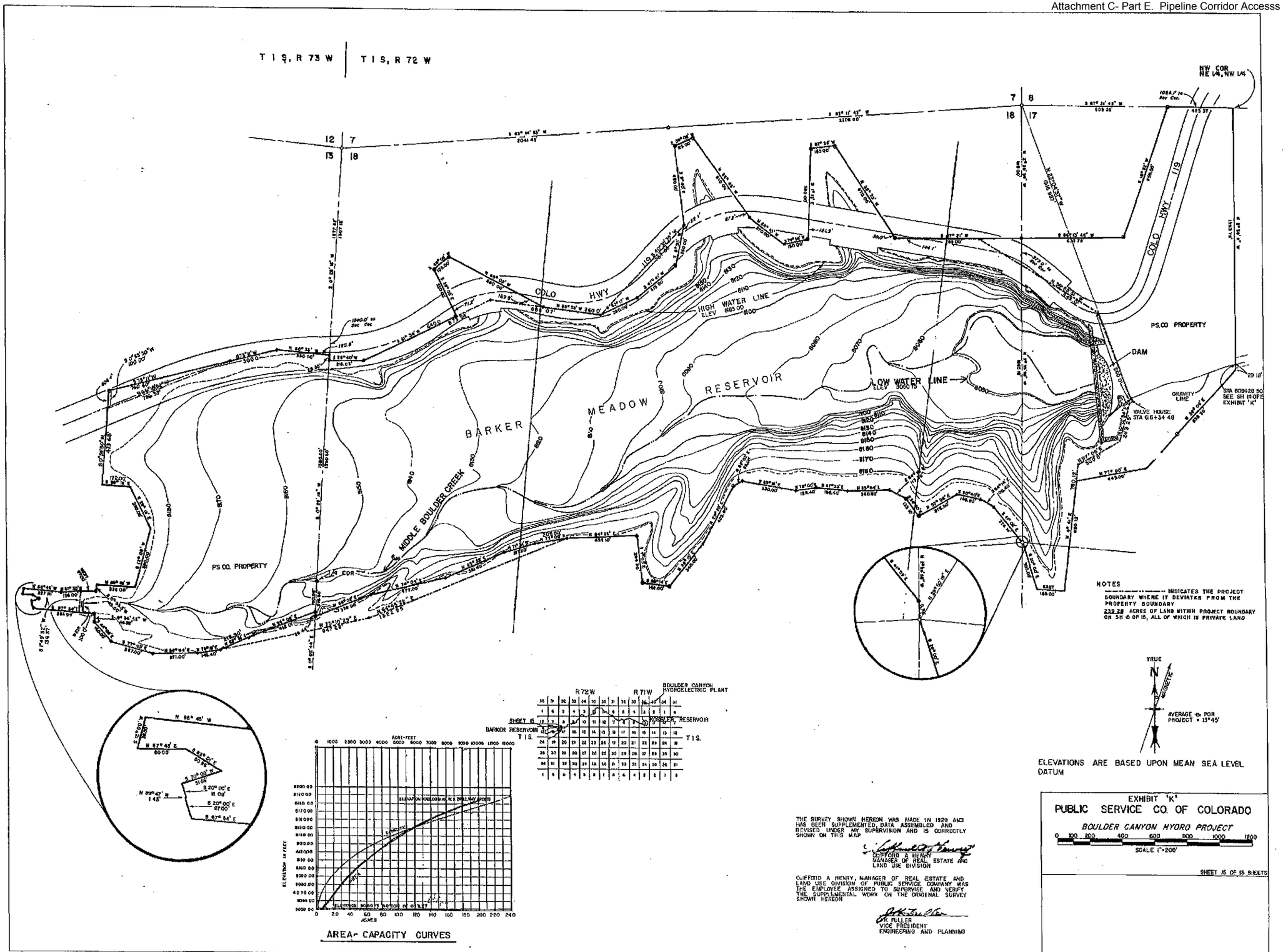
T 1 S, R 73 W
T 1 S, R 72 W
NW COR NE 1/4, NW 1/4
COLO HWY
HIGH WATER LINE ELEV 8165.00
LOW WATER LINE ELEV 8000.75
BARKER MEADOW RESERVOIR
MIDDLE BOULDER CREEK
PS.CO PROPERTY
DAM
VALVE HOUSE STA 618+34.48
GRAVITY LINE
NOTES
INDICATES THE PROJECT BOUNDARY WHERE IT DEVIATES FROM THE PROPERTY BOUNDARY
233.28 ACRES OF LAND WITHIN PROJECT BOUNDARY ON SH 15 OF 15, ALL OF WHICH IS PRIVATE LAND
TRUE N
MAGNETIC
AVERAGE ∢ FOR PROJECT = 13°45'
ELEVATIONS ARE BASED UPON MEAN SEA LEVEL DATUM
BOULDER CANYON HYDROELECTRIC PLANT
R 72 W
R 71 W
SHEET 15
BARKER RESERVOIR
KOSSLER RESERVOIR
T 1 S.
ACRE-FEET
ELEVATION IN FEET
ACRES
AREA- CAPACITY CURVES
THE SURVEY SHOWN HEREON WAS MADE IN 1929 AND HAS BEEN SUPPLEMENTED, DATA ASSEMBLED AND REVISED UNDER MY SUPERVISION AND IS CORRECTLY SHOWN ON THIS MAP
CLIFFORD A. HENRY
MANAGER OF REAL ESTATE AND LAND USE DIVISION
CLIFFORD A. HENRY, MANAGER OF REAL ESTATE AND LAND USE DIVISION OF PUBLIC SERVICE COMPANY WAS THE EMPLOYEE ASSIGNED TO SUPERVISE AND VERIFY THE SUPPLEMENTAL WORK ON THE ORIGINAL SURVEY SHOWN HEREON
O.K. PULLER
VICE PRESIDENT
ENGINEERING AND PLANNING
EXHIBIT "K"
PUBLIC SERVICE CO. OF COLORADO
BOULDER CANYON HYDRO PROJECT
SCALE 1"=200'
SHEET 15 OF 15 SHEETS

1005-16

Barker Gravity Pipeline

City of Boulder Raw Water Transmission Pipeline
Located in Boulder County Colorado
Entire pipeline located within T1S R72W and T1S R71W

Barker Gravity Pipeline
Access routes
Sheet Index
US Government Land

The information displayed on this map has been compiled from the most accurate source data available to the City of Boulder. However, this map is for reference purposes only and should not be construed as a legal document or survey instrument.

June 2014

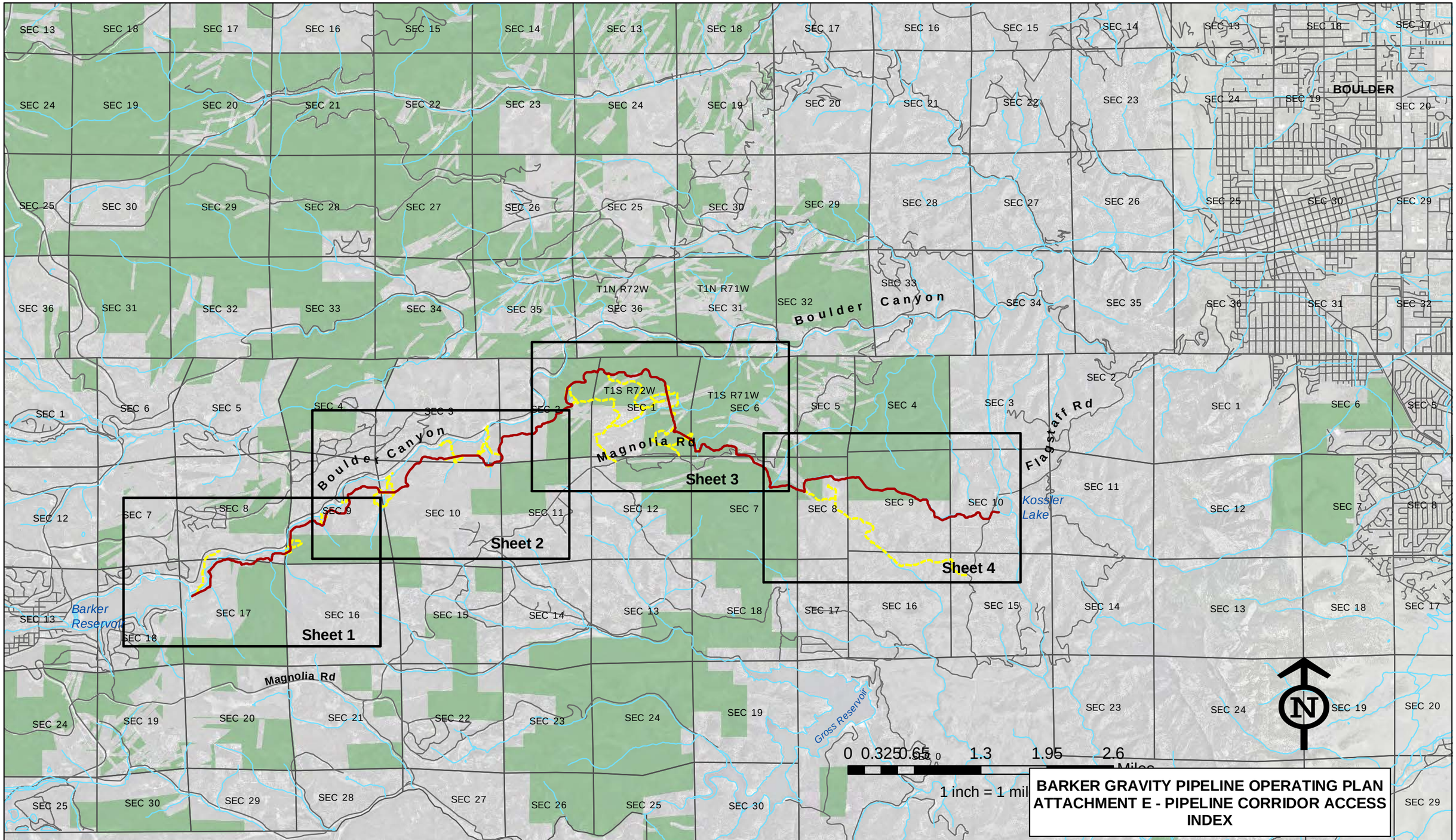

BARKER GRAVITY PIPELINE OPERATING PLAN
ATTACHMENT E - PIPELINE CORRIDOR ACCESS INDEX

Barker Gravity Pipeline

City of Boulder Raw Water Transmission Pipeline
Located in Boulder County Colorado

- Manhole
- Siphon
- Tunnel
- Barker Gravity Pipeline
- Access Route - Vehicle
- Access Route - ATV/foot trail
- Ownership Parcel
- U S Government Land

The information displayed on this map has been compiled from the most accurate source data available to the City of Boulder. However, this map is for reference purposes only and should not be construed as a legal document or survey instrument.

June 2014

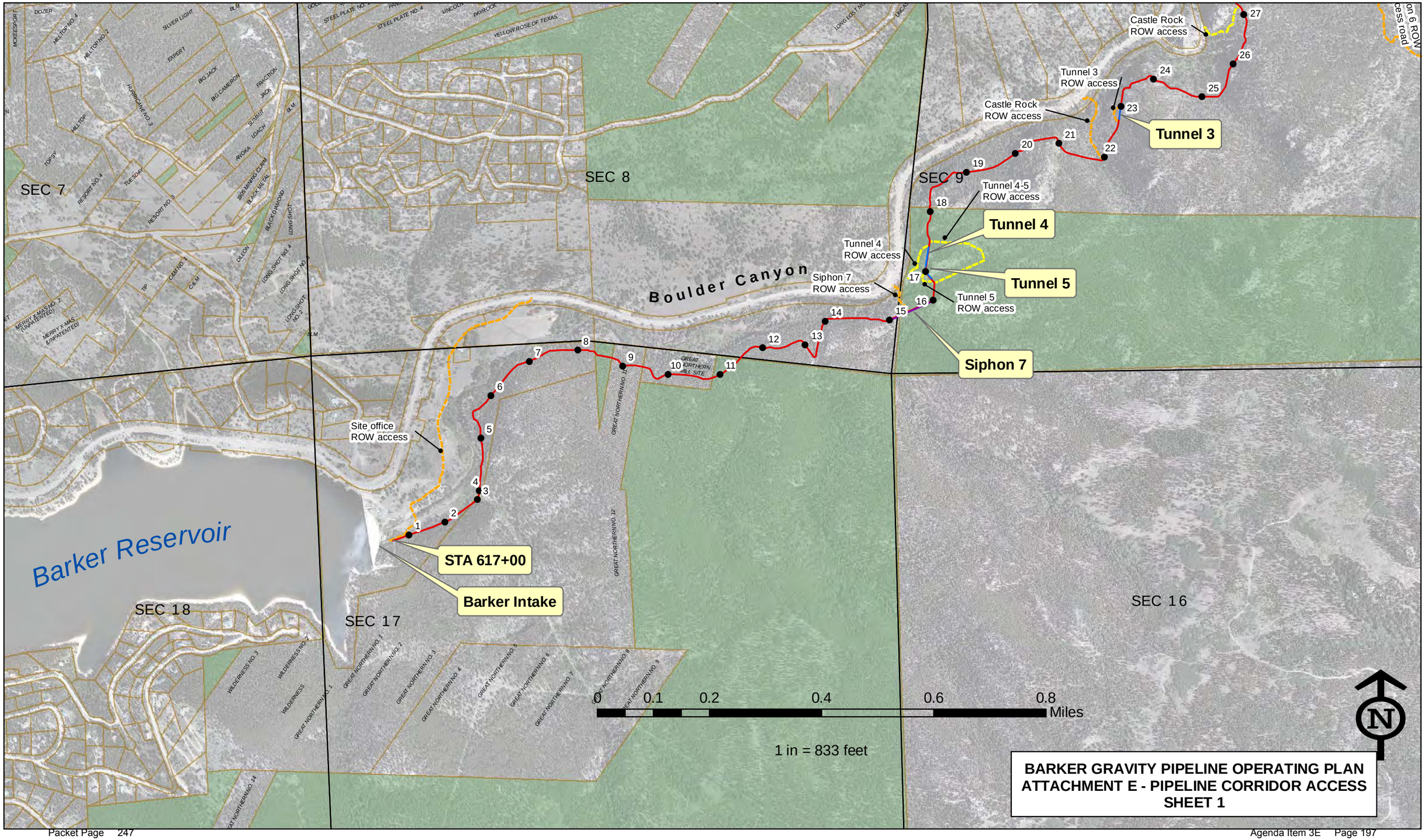

BARKER GRAVITY PIPELINE OPERATING PLAN
ATTACHMENT E - PIPELINE CORRIDOR ACCESS
SHEET 1

Barker Gravity Pipeline

City of Boulder Raw Water Transmission Pipeline
Located in Boulder County Colorado

- Manhole
- Siphon
- Tunnel
- Barker Gravity Pipeline
- Access Route - Vehicle
- Access Route - ATV/foot trail
- Ownership Parcel
- U S Government Land

The information displayed on this map has been compiled from the most accurate source data available to the City of Boulder. However, this map is for reference purposes only and should not be construed as a legal document or survey instrument.

June 2014

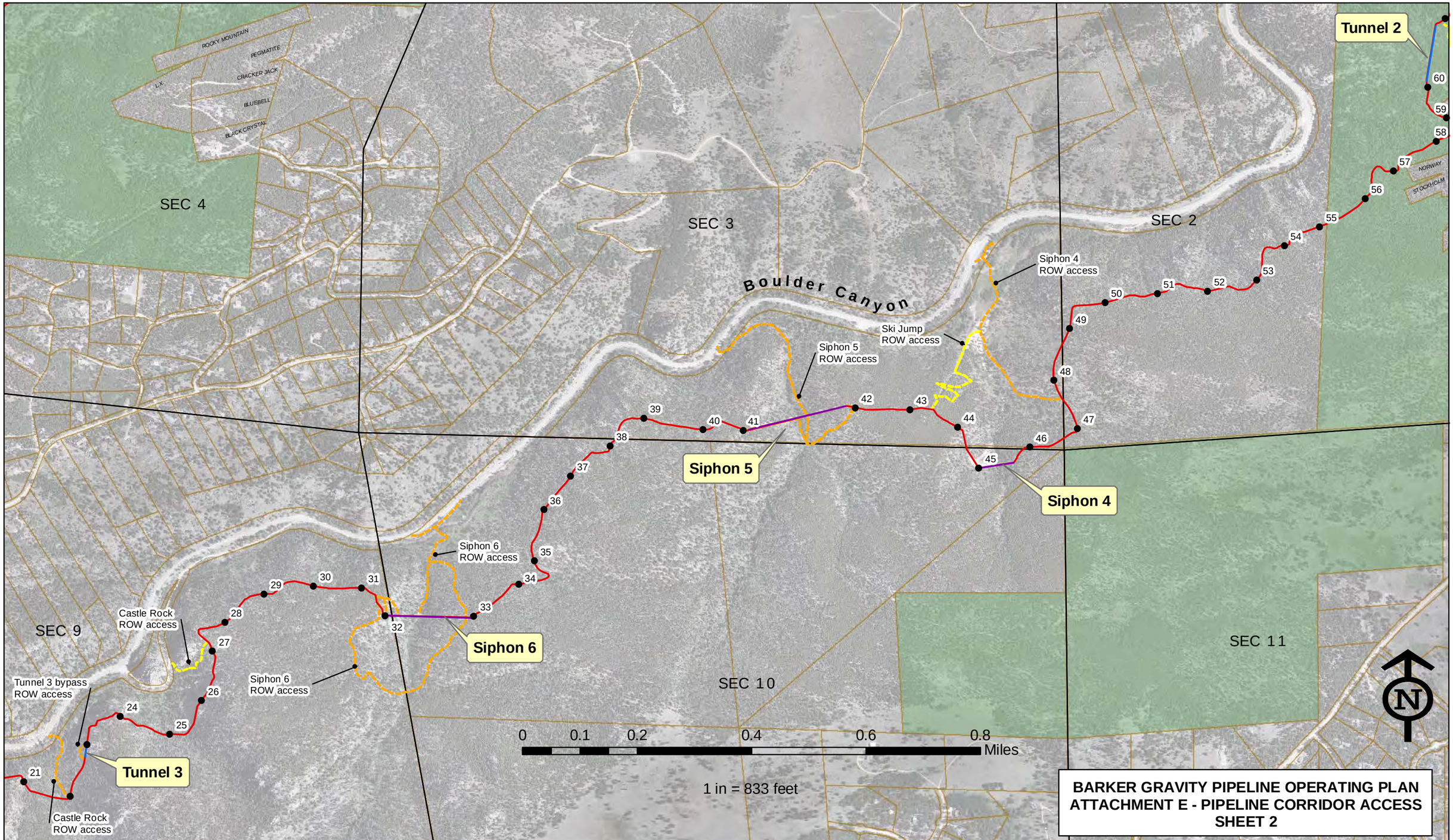

Barker Gravity Pipeline

City of Boulder Raw Water Transmission Pipeline
Located in Boulder County Colorado

- Manhole
- Siphon
- Tunnel
- Barker Gravity Pipeline
- Access Route - Vehicle
- Access Route - ATV/foot trail
- Ownership Parcel
- U S Government Land

The information displayed on this map has been compiled from the most accurate source data available to the City of Boulder. However, this map is for reference purposes only and should not be construed as a legal document or survey instrument.

June 2014

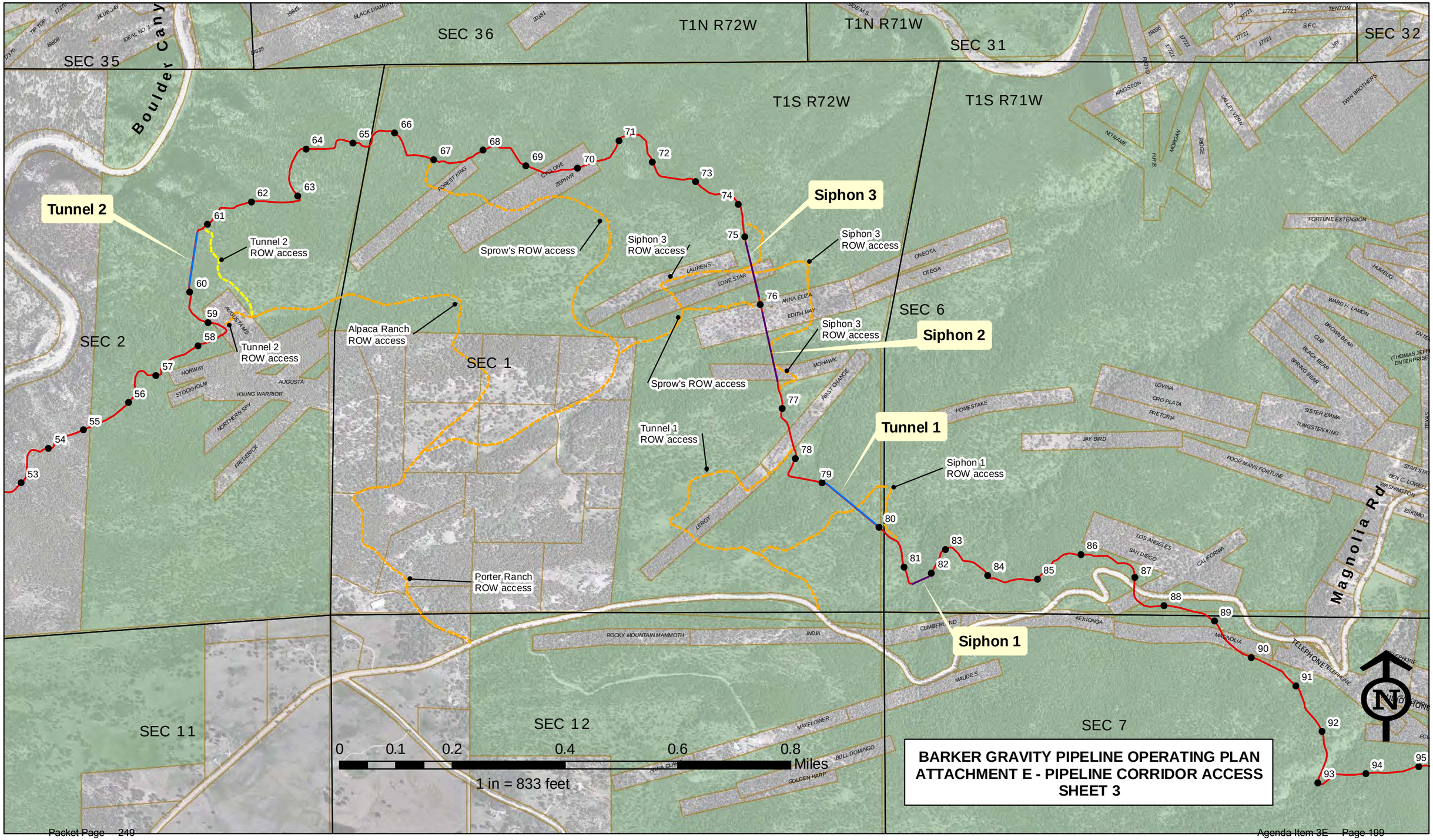

Barker Gravity Pipeline

City of Boulder Raw Water Transmission Pipeline
Located in Boulder County Colorado

- Manhole
- BCH Penstock
- Barker Gravity Pipeline
- Siphon
- Tunnel
- Access Route - Vehicle
- Access Route - ATV/foot trail
- Ownership Parcel
- U S Government Land

The information displayed on this map has been compiled from the most accurate source data available to the City of Boulder. However, this map is for reference purposes only and should not be construed as a legal document or survey instrument.

June 2014

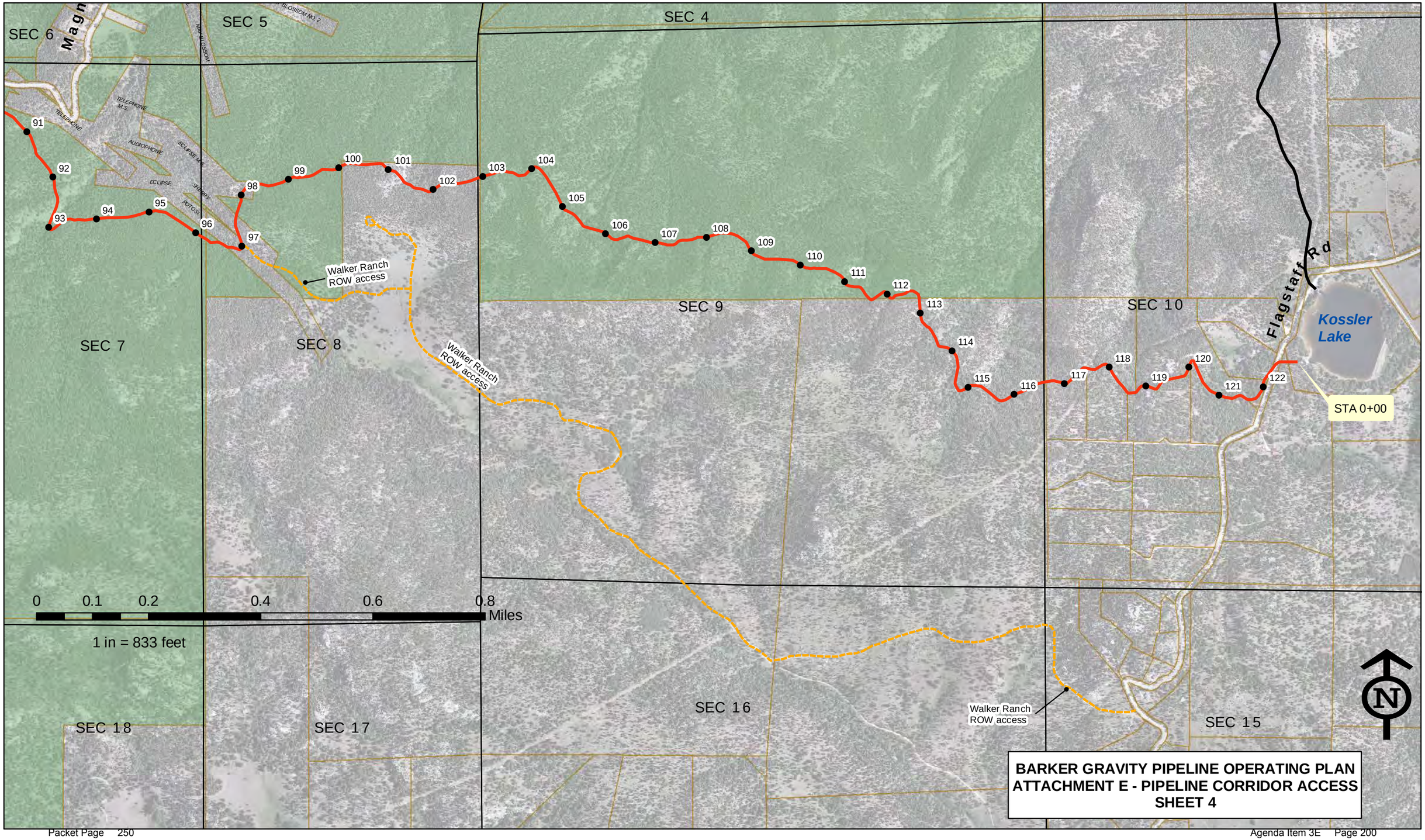

CITY OF BOULDER
CITY COUNCIL AGENDA ITEM

MEETING DATE: July 22, 2014

AGENDA TITLE: Consideration of a motion authorizing the City Manager to enter into an intergovernmental agreement (IGA) with Boulder County to address jail overcrowding issues.

PRESENTERS
Jane S. Brautigam, City Manager
Linda Cooke, Municipal Court Judge
Tom Carr, City Attorney
Greg Testa, Police Chief

EXECUTIVE SUMMARY

This agenda item seeks council authorization for the city manager to enter into an intergovernmental agreement with Boulder County. The IGA would:

- Allow the County Sheriff, with approval from the Municipal Court Judge, to release inmates incarcerated by the city who are nearing the end of a sentence.
- Allow the County Sheriff to board inmates incarcerated by the city in other facilities at the city's expense. The amount of such payments is limited to $10,000 per year.

Staff recommends that the council authorize the city manager to enter into the IGA.

STAFF RECOMMENDATION

Suggested Motion Language:
Staff requests council consideration of this matter and action in the form of the following motion:

Motion to authorize the city manager to enter into an intergovernmental agreement with Boulder County to address jail overcrowding in the form generally presented in Attachment A.

BACKGROUND & ANALYSIS

The Boulder County Jail was opened in 1988 with a capacity of 287. The jail's capacity has been increased six times since it opened. The current capacity is 536.

On May 13, 2014, Sheriff Joe Pelle made a presentation to the Boulder County Commission regarding seasonal overcrowding at the Boulder County Jail. Sheriff Pelle attributed some of the overcrowding to steps taken by the city to address criminal activity on the municipal campus and surrounding area, which included increased sentences for certain offenses. Sheriff Pelle stated that inmates incarcerated by the City of Boulder usually represent only a small percentage of the jail's capacity. He stated, however, that even these few inmates could push the jail beyond its limits.

On May 27, 2014, city staff met with Sheriff Pelle to discuss his concerns. Sheriff Pelle asked city staff to consider entering into an intergovernmental agreement to allow the jail to better manage population. He requested authority to release nonviolent offenders near the end of a sentence. He also sought the city's agreement to allow some city inmates to be transported to other facilities and to have the city pay the cost of boarding these inmates. This is similar to the arrangement that the sheriff has with the approval of the chief judge of the 20th Judicial District for nonviolent county court sentenced inmates.

Sheriff Joe Pelle is presently working on entering into a similar IGA with the City of Longmont. That process has recently just started. Given that Boulder and Longmont are the largest cities in Boulder County, it makes sense to only do agreements with those two cities. The incarceration level of the other cities and towns are so low as to not warrant such an agreement. It was reported that Sheriff Pelle may consider pursuing agreements with other cities if they use the jail more.

Staff negotiated and supports the attached IGA.

ATTACHMENTS

Attachment A: Proposed Intergovernmental Agreement with Boulder County

INTERGOVERNMENTAL AGREEMENT BETWEEN THE CITY OF BOULDER AND BOULDER COUNTY CONCERNING HOUSING MUNICIPAL PRISONERS IN BOULDER COUNTY JAIL

THIS AGREEMENT is entered into this____day of _____, 2014 between the City of Boulder ("City") and the Boulder County Board of Commissioners ("County").

Whereas, §29-1-203 and §30-11-410, C.R.S. permit municipal and county governments to enter into cooperative agreements; and

Whereas, §31-15-401(k), C.R.S. gives the County authority to consent to the housing of prisoners from different municipalities in the Boulder County Jail; and

Whereas, the Sheriff has charge and custody of the jail and is responsible for the care and custody of its prisoners pursuant to §30-10-511, C.R.S.; and

Whereas, the jail was built and is maintained and operated with County tax revenues a substantial portion of which are contributed by the taxpayers of the City of Boulder; and

Whereas, virtually all municipal offenses prosecuted by the City of Boulder for which jail time is imposed are equivalent to state law offenses prosecuted by the Boulder County; and

Whereas, the County has consulted with the Sheriff and believes in his role and responsibility of maintaining the jail, he is in the best position to manage this agreement and delegates their authority under §31-14-401, C.R.S. to him for that purpose; and

Whereas, Boulder Municipal judges sentence municipal offenders to the Boulder County Jail from time to time, although such offenders constitute only a very small part of the Boulder County Jail population; and

Whereas, all parties have an interest in maintaining the safety of the jail and balancing that interest with the need to house certain municipal offenders for jailable offenses; and

Now therefore in consideration of the mutual promises herein, the parties agree as follows:

1. **Terms and Conditions**. It is understood and agreed that this Agreement is intended to facilitate cooperation between the parties maintaining the safety of the jail, specifically when the jail becomes overcrowded; this Agreement does not authorize any Party, or the employee of any party, to act for any purpose outside of what it contained in this agreement. This agreement shall provide for the

process by which municipal offenders will be housed and released should the inmate population become overcrowded. It also provides for the payment structure in the event that jail numbers exceed 500 inmates.

2. This Agreement will operate as follows:

A. Boulder County Jail will continue to house municipal inmates without charging the City except as provided in this agreement.

B. The Sheriff may, when the jail population is equal to or greater than 500 inmates, if necessary, provide for the boarding of municipal prisoners in other counties. In the event that the jail must house municipal inmates at another facility, the City agrees to pay the daily rate assessed to the County for boarding the inmate as established by the facility at which the inmate is boarding.

C. The jail population will be the number of inmates incarcerated in the jail as a residential inmate. The jail population shall not include those persons incarcerated pending being booked and released and those persons sentenced to alternative sentences that do not require the inmate to occupy jail space.

D. The criteria used to assess which prisoners are boarded in another facility include whether or not the individual has mental health or medical health needs. The jail does not send prisoners with significant needs to other facilities—this would include municipal prisoners. This is a very selective process and therefore, by its nature, would be proportionately fair when assessing the need to board municipal versus non-municipal inmates in another facility.

E. The County agrees that it will cap the amount for which it will bill the City for boarding inmates at $10,000 annually. If the need to board Boulder municipal inmates exceeds the number of bed days for which $10,000 would be adequate payment, the parties agree to revisit the cap on this amount and make updates or changes to the process and the amount of billing required.

F. The County agrees that Boulder municipal defendants will only be transported in numbers roughly proportional to the percentage of Boulder municipal defendants to the total jail population.

G. At such time that the jail does reach 500 inmates, the Sheriff may, in his discretion and with prior approval by the municipal court judge, provide for the release of municipal prisoners. In the event that a municipal prisoner is selected for release, jail staff will contact the municipal judge for permission to release the inmate and notify the city attorney that a release of a municipal inmate is being recommended.

H. Criteria for the determination of the release of prisoners include those who are near the end of their sentences for a nonviolent crime.

I. County agrees to provide to City an annual accounting of the total number of days municipal inmates were required to be housed by a different facility, the name of the facility in which the inmate was housed, and cost of boarding.

J. Each agency is responsible for the compensation of their own employees, provision of workers compensation insurance and other benefits, liability coverage, and all other costs associated with the activities of their employees while acting under the terms of this agreement.

3. **Term and Termination.** This Agreement shall be in effect of the date written above and shall continue in effect indefinitely. Any party to this Agreement may terminate its involvement at any time after serving thirty (30) days advance written notice.

4. **Relationship of Parties.** The Parties enter into this Agreement as separate, independent governmental entities and shall maintain such status throughout.

5. **Colorado Governmental Immunity Act.** No Party shall be liable under this Agreement for the actions of the other's employees and agents. By agreeing to this provision, the Parties do not waive or intend to waive, the limitations on liability which are provided to Parties under the Colorado Governmental Immunity Act, C.R.S §§24-10-101, et seq.

6. **No Third Party Beneficiaries.** It is expressly understood and agreed that enforcement of the terms and conditions of this Agreement, and all rights of action relating to such enforcement, shall be strictly reserved to the Parties and

nothing contained in this Agreement shall give or allow any such claim or right of action by any other third party on such Agreement. It is the express intention of the Parties that any person other than the Parties receiving services or benefits under the Agreement shall be deemed an incidental beneficiary only.

7. **No Assignment.** Each Party covenants and agrees that it will not assign this Agreement or any interest or part thereof or any right or privilege pertinent thereto without the prior written consent of all other Parties first having been obtained**.**

8. **Governing Law.** The law of the State of Colorado shall be applied in the interpretation, execution, and enforcement of this Agreement.

9. **Paragraph Captions.** The captions of the paragraphs are set forth only for the convenience and reference of the Parties and are not intended in any way to define, limit, or describe the scope or intent of this Agreement.

10. **Entire Agreement.** This Agreement embodies the entire agreement of the parties. The parties shall not be bound by or be liable for any statement, representation, promise, inducement, or understanding of any kind or nature not set forth herein. No changes, amendments, or modifications of any of the terms of conditions of this Agreement shall be valid unless reduced to writing and signed by all parties.

IN WITNESS WHEREOF the parties hereto have executed this Agreement, which shall be effective upon the first date above written.

Dated: July ___ , 2014

AUTHORIZATION:

_____	_____
Cindy Domenico, Chair	**Jane S. Brautigam**
Boulder Board of County Commissioners	**City Manager**
	City of Boulder

CITY OF BOULDER
CITY COUNCIL AGENDA ITEM

MEETING DATE: July 22, 2014

AGENDA TITLE: Consideration of a motion to approve an amendment to the intergovernmental agreement (IGA) between the City of Boulder and Boulder County for additional funding for commercial energy efficiency rebates.

PRESENTERS
Jane S. Brautigam, City Manager
Tom Carr, City Attorney
Debra Kalish, Senior Assistant City Attorney
David Driskell, Executive Director of Community Planning and Sustainability
Susan Richstone, Deputy Director of Community Planning and Sustainability
Elizabeth Vasatka, Business Sustainability Coordinator
Juliet Bonnell, Administrative Specialist III

EXECUTIVE SUMMARY

The purpose of this item is to seek City Council approval of an amendment to the intergovernmental agreement (IGA) with Boulder County which would add $150,000 to commercial EnergySmart rebates funds designed to support Boulder businesses and property owners in implementing energy efficiency upgrades. The amendment to the IGA is Attachment A.

The City of Boulder and Boulder County have partnered since 2010 to provide energy efficiency programs and services to residents and businesses through the joint "EnergySmart" program. This is the first amendment to the 2014 IGA covering the continuation of these services that aim to improve the energy efficiency of existing buildings, with the primary purpose of allocating commercial Climate Action Plan (CAP) tax funds towards rebates. These services are administered by Boulder County and the rebates are distributed to City of Boulder commercial EnergySmart customers.

While the Federal grant funding ended in September 2013, the city and county are working together to continue the EnergySmart services at a reduced level through the duration of 2015. Boulder County will continue to support the program using county general fund monies or a potential new funding source, and the City of Boulder will supplement this funding with CAP tax funds. The City and County EnergySmart budget for 2014 can be viewed in the Feb. 18, 2014 City Council memo.

As Boulder businesses continue to take advantage of program resources and rebates this year,

the County's rebate funds are expended and nearly two-thirds of the city CAP tax rebate funds are already awarded to Boulder businesses and property owners. To meet businesses' needs and ensure program success, additional funds are needed.

STAFF RECOMMENDATION

Suggested Motion Language:
Staff requests council consideration of this matter and action in the form of the following motion:

Motion to authorize the City Manager to approve the amendment of the Intergovernmental Agreement between Boulder County and the City of Boulder to provide additional funding for commercial EnergySmart energy efficiency equipment rebates.

COMMUNITY SUSTAINABILITY ASSESSMENTS AND IMPACTS

- Economic – The amendment to the IGA allows the rebate funding to last through 2014, creating efficiencies and opportunities that leverage intergovernmental resources in a way that benefits the Boulder community, its employees, residents and businesses.
- Environmental – The primary purpose of the IGA and its amendment is to promote environmental sustainability in a way that leverages regional resources.
- Social – Within Boulder County, many people work in one community and live in another. By expanding the reach of the City of Boulder's efficiency services in a way that serves the Boulder County community, recipients receive consistent quality services and messages that minimize confusion and costs – no matter where a participant lives or works. Additionally, the "energy advisor" service delivery model is designed to cut through cultural and educational barriers to facilitate action.

OTHER IMPACTS

- Fiscal – With this amendment, the EnergySmart IGA commits a total of $430,000 of commercial CAP tax funds towards rebates, administered by Boulder County and distributed to City of Boulder commercial EnergySmart customers. These funds have been accounted for in the commercial CAP tax budget and do not impact other climate programming for 2014.

- Staff time – No additional staff time will be required for the continued administration of commercial EnergySmart services under the amendment to the IGA. The staff time required for this partnership will be a continuation of existing work plan responsibilities of LEAD staff.

BACKGROUND

The background information on the EnergySmart partnership and collaboration with Boulder County can be viewed in the June 18, 2013 City Council memo.

ANALYSIS

The continued purpose of the IGA with Boulder County is to distribute commercial CAP tax

funding for commercial energy efficiency equipment rebates to City of Boulder commercial customers.

The Commercial EnergySmart program's success stems from the combination of advising services paired with rebate incentives to businesses and property owners to make energy efficiency equipment upgrades.

In 2014,the countywide EnergySmart program has seen the majority of its activity in the City of Boulder. By June, the County's $150,000 in rebate funds for Commercial EnergySmart had been reserved or expended. Of the expended rebate funds, the allocation is as follows:

- Boulder – 57 percent
- Longmont – 35 percent
- Other county – 8 percent

Of the city's initial $280,000 of additional CAP tax Commercial EnergySmart rebates that were approved in the 2014 IGA, less than $100,000 still remains for distribution. These funds are available only to businesses within the city, and are in addition to the funds made available countywide. The goal in amending the IGA is to ensure adequate rebate amounts within the city for the second half of the year.

Without EnergySmart equipment rebates leveraging Xcel Energy's incentives, it is difficult to get businesses to take action. Reallocated commercial CAP tax funding is available for this purpose and will ensure that the City of Boulder's businesses and building owners have rebate incentives available to them to make energy efficiency improvements.

NEXT STEPS

Once the IGA Amendment is approved and executed, the city can release funding for commercial EnergySmart rebates to city applicants without a lapse in funding for the remainder of 2014.

ATTACHMENTS

A: Draft Amendment to the Intergovernmental Agreement between Boulder County and the City of Boulder concerning additional funding for commercial EnergySmart energy efficiency equipment rebates.

This Page Intentionally Left Blank

FIRST AMENDMENT TO INTERGOVERNMENTAL AGREEMENT CONCERNING THE FUNDING OF ENERGY EFFICIENCY PROGRAMS

THIS FIRST AMENDMENT TO INTERGOVERNMENTAL AGREEMENT CONCERING THE FUNDING OF ENERGY EFFICIENCY PROGRAMS (this "First Amendment") is made as of the ___ day of _____, 2014, by and between the City of Boulder, Colorado, a Colorado home rule municipality (the "City"), and Boulder County, a body corporate and politic of the State of Colorado (the "County").

WHEREAS, the City and the County (the "Parties") entered into an Intergovernmental Agreement Concerning the Funding of Energy Efficiency Programs dated April 8, 2014 (the "Agreement"); and

WHEREAS, the Parties desire to amend the Agreement to change a provision of the Agreement as they relate to funding of the Commercial Program.

NOW THEREFORE, in consideration of the promises and obligations set forth below, the Parties agree to amend the Agreement as follows:

1. Section 3B shall be amended by the revision of increasing the rebate funds to the contributions noted in the paragraph, which shall read as follows:

> In order to make County Funds for the EnergySmart Commercial Rebates available to the businesses of Boulder County in a fair and equitable manner, the County and the City agree on the following approach: the City agrees to provide $100,000 of the City Funds for EnergySmart Commercial Rebates from the commencement of the IGA. Once City Applicants have received $60,000 in EnergySmart Commercial Rebates paid from County Funds, the City shall contribute up to an additional $330,000 of the City Funds for EnergySmart Commercial Rebates. All City rebate funds will be for the exclusive benefit of City Applicants. The City acknowledges that the EnergySmart Commercial Rebates will be processed through a third-party rebate processor and that the City shall pay to the County any processing fees charged to the County for EnergySmart Commercial Rebates that are funded by City Funds.

2. Except as amended herein, the Agreement shall remain in full force and effect.

IN WITNESS WHEREOF, the Parties have set their hands to this Amendment on the day and year above first written.

CITY OF BOULDER:

By:_____

Jane S. Brautigam, City Manager

ATTEST:

_____

City Clerk

APPROVED AS TO FORM:

_____

City Attorney

BOULDER COUNTY

_____

Cindy Domenico, Chair
Board of Boulder County Commissioners

Attest: _____
Clerk to the Board

_____

Date

CITY OF BOULDER
CITY COUNCIL AGENDA ITEM

MEETING DATE: July 22, 2014

AGENDA TITLE: Second reading and consideration of a motion to adopt Ordinance No. 7981 amending Section 4-20-55, "Court and Vehicle Impoundment Costs, Fees, and Civil Penalties," B.R.C. 1981, changing certain court fees, and setting forth related details.

PRESENTERS
Jane S. Brautigam, City Manager
Bob Eichem, Chief Financial Officer
Linda P. Cooke, Presiding Judge
Lynne C. Reynolds, Court Administrator

EXECUTIVE SUMMARY
On June 17, 2014 Council passed on first reading proposed changes to a City fee for Deferred Prosecution and Conditional Motion to Dismiss. The requested fee increase places Boulder in the mid-range of fees charged by other municipalities and provides appropriate costing for the complexity inherent in monitoring compliance of these sentencing agreements.

STAFF RECOMMENDATION

Suggested Motion Language:
Staff requests council consideration of this matter and action in the form of the following motion:

Motion to adopt Ordinance No. 7981, amending Section 4-20-55, B.R.C. 1981, changing certain court fees, and setting forth related details.

ANALYSIS
Traditionally, sentencing agreements for Deferred Prosecution and Conditional Motion to Dismiss had few requirements beyond a review at the end of the timeframe to determine any new violations. Over the past four years, theses sentencing agreements have evolved

to where the norm involves monitoring and compliance checking of multiple conditions. This is especially true in agreements resulting from violations of minor in possession of alcohol or marijuana and violations being settled through referral to the University of Colorado's Restorative Justice Program (CURJ). This added oversight of multiple conditions requires an increase to the administrative fee.

The administrative fee prescribed by ordinance in other Municipal Courts for this type of sentencing offer varies.

MUNICIPAL COURT	ADMINISTRATIVE FEE
Commerce City	$50.00
Englewood	$50.00
Fort Collins	$50.00
Thornton	$75.00
Arvada	$80.00
Westminster	$10.00 for each month
Greeley	$100.00

Increasing the Court's administrative fee from $50.00 to $75.00 places the fee in the mid-range of fees charged by other municipalities for this service. Moreover, the fee increase provides appropriate costing for the complexity inherent in monitoring compliance of these sentencing agreements.

ATTACHMENT
A - Proposed Ord. No 7981

ORDINANCE NO. 7981

AN ORDINANCE AMENDING SECTION 4-20-55, "COURT AND VEHICLE IMPOUNDMENT COSTS, FEES, AND CIVIL PENALTIES," B.R.C. 1981, CHANGING CERTAIN COURT FEES, AND SETTING FORTH RELATED DETAILS.

BE IT ORDAINED BY THE CITY COUNCIL OF THE CITY OF BOULDER, COLORADO:

Section 1. Section 4-20-55, B.R.C. 1981, is amended to read:

4-20-55. Court and Vehicle Impoundment Costs, Fees, and Civil Penalties.

(a) The costs, fees, or civil penalties authorized in Chapter 2-6, "Courts and Confinements," B.R.C. 1981, shall be:

(1) Scofflaw civil penalty $ 25.00

(2) Immobilization or impoundment civil penalty 50.00

(3) Deferred sentence administrative costs: traffic violations 75.00

Deferred sentence administrative costs: all other violations 100.00

Deferred prosecution and conditional motions to dismiss administrative costs ~~50.00~~75.00

(4) Juror fees:

panel only 3.00

actual service for day 6.00

(5) Witness fee up to $ 50.00

(6) Complaining witness default fee 300.00

(7) Court costs:

plea 25.00

trial to court 25.00

jury trial 25.00

administrative hearing 25.00

(8) Probation supervision fee 50.00

(9) Community service fee 35.00

(10) Warrant processing fee 50.00

(11) Failure to appear, pay, or comply fee 50.00

(12) Stay fee (payment plan) 15.00

(b) The costs for service of process under chapter 7-4, "Operation of Vehicles," B.R.C. 1981, shall be:

(1) Personal service of process: automated vehicle identification complaint:

served by a person other than a peace officer $20.00

served by a peace officer 60.00

served by certified mail 3.00

(c) The administration fee for vehicles impounded under Chapter 7-7, "Towing and Impoundment" B.R.C. 1981, shall be:

(1) Abandoned and inoperable vehicle impoundment fee $25.00

(2) Inoperable vehicle on private property impoundment fee 25.00

Section 2. This ordinance is necessary to protect the public health, safety, and welfare of the residents of the city, and covers matters of local concern.

Section 3. The city council deems it appropriate that this ordinance be published by title only and orders that copies of this ordinance be made available in the office of the city clerk for public inspection and acquisition.

INTRODUCED, READ ON FIRST READING, AND ORDERED PUBLISHED BY TITLE ONLY this 17th day of June 2014.

_____
Mayor

Attest:

_____
City Clerk

READ ON SECOND READING, PASSED, ADOPTED, AND ORDERED PUBLISHED BY TITLE ONLY this 22nd day of July 2014.

_____
Mayor

Attest:

_____
City Clerk

This Page Intentionally Left Blank

CITY OF BOULDER
CITY COUNCIL AGENDA ITEM

MEETING DATE: July 22, 2014

AGENDA TITLE: Introduction, first reading and consideration of a motion to order, published by title only, an ordinance submitting to the registered electors of the City of Boulder at the general municipal coordinated election to be held on Tuesday, November 4, 2014 the question of amending City Charter Section 9 to provide that the city council may meet in executive session only for the purpose of discussing legal advice and negotiation strategy relating to the creation of a municipal electrical utility, with such authority ending on December 31, 2017; setting forth the ballot title; and specifying the form of the ballot and other related details.

PRESENTERS

Jane S. Brautigam, City Manager
Thomas A. Carr, City Attorney
Heather Bailey, Executive Director, Energy Strategy and Utility Development

EXECUTIVE SUMMARY

At a Study Session on April 22, 2014, council members discussed a potential Charter amendment to permit executive sessions for the limited purpose of discussing legal advice and negotiation strategy in relation to the creation of a municipal electrical utility. This agenda item submits for first reading a proposed ordinance amending Section 9 of the Boulder Home Rule Charter to allow for a limited exception to the public meetings requirement for this purpose. The authority would expire on December 31, 2017, which is the same date that the utility occupation tax funding exploration of the creation of a municipal electrical utility expires.

Suggested Motion Language:
Staff requests council consideration of this matter and action in the form of the following motion:

Motion to introduce and order, published by title only, an ordinance placing on the November 5, 2013 ballot a measure amending Section 9 of the Boulder Home Rule Charter.

COMMUNITY SUSTAINABILITY ASSESSMENTS AND IMPACTS

- Economic – A municipal utility should have a positive economic impact on our community. The utility will provide employment and a wide range of opportunities to promote and support business in Boulder.
- Environmental – Climate change and increasing green house gases are probably our society's number one environmental challenge. The largest contributor in greenhouse gases in Boulder are the facilities used to produce electricity.
- Social – The social impacts of climate change are well-documented.

OTHER IMPACTS

- Fiscal – None identified.
- Staff time – Staff work necessary to implement this provision should be minimal and can be accomplished within normal work programs.

BOARD AND COMMISSION FEEDBACK

None. This is a Council initiative.

BACKGROUND

Charter Section 9 provides for meetings of the City Council. Section 9 provides in relevant part as follows: "All meetings of the council or committees thereof shall be public." This language has precluded the City Council from convening confidential meetings to discuss matters such as litigation, real estate purchases or negotiation strategy. There only exception is a provision, first adopted in 1981, which allows for a council subcommittee to meet confidentially to consider applications for, evaluation of or discipline of the city manager, city attorney or municipal court judge.

Colorado State Law allows for executive sessions in limited circumstances. These include:

- Purchase, sale or lease of real estate.
- Attorney-client communications.
- Matters that must be kept confidential under state or federal law.
- Specialized details of security arrangements.

- Negotiations.
- Personnel matters.
- Consideration of documents exempt from the Colorado Open Records Act.

C.R.S. § 24-6-402.

The voters most recently considered an amendment to section 9 in November 2008. On August 5, 2008, the council adopted ordinance number 7600, placing the following ballot title on the November 4, 2008 ballot:

> Shall Section 9 of the Charter be amended pursuant to Ordinance No. 7600 in order to allow city council to meet in executive session to discuss sensitive matters where premature disclosure would be contrary to the public interest?
>
> Executive sessions will only be held in conformity with locally enacted procedural rules that are at least as restrictive as those set forth in the laws of the state of Colorado and only upon a 2/3 vote of council members present at a meeting. No final action will be allowed at executive sessions.
>
> The only subjects that will be discussed in executive sessions are:
>
> (1) Confidential issues associated with the purchase, acquisition, lease, transfer or sale of property;
>
> (2) Confidential legal advice;
>
> (3) Confidential security matters or investigations;
>
> (4) Confidential issues relating to ongoing negotiations and negotiating strategy; or
>
> (5) Hiring and personnel matters pertaining to one of the council's three employees, so long as the subject council employee is able to require that the discussion be held in public.
>
> For the Measure ____ Against the Measure ____

The voters rejected the measure with 16,904 (38.51 percent) voting in favor and 26,992 (61.49 percent) voting against.

Since 2010, the City has been evaluating the possibility of creating a municipal electrical utility. This project will involve what is likely to be the largest single expenditure in the history of the City of Boulder. The city already is engaged in broad reaching litigation on an unprecedented scale, which is expected to continue for the foreseeable future. The only way that the council can discuss these confidential matters with staff is in meetings with no more than two council members present. Without all council members in the

room, council members do not have the benefit of what most of their colleagues are thinking. The net effect of this process is that staff makes many decisions without the benefit of guidance from elected council members.

Staff recommends that council consider the attached proposed ordinance that would allow for executive sessions limited to discussions of legal advice and negotiation strategy related to the creation of a municipal electrical utility. Under this proposal, the Charter would further limit executive sessions as follows:

- All executive sessions would be conducted according to state law.
- No final action may be taken in an executive session.
- An executive session would be initiated only by a 2/3 vote of council members present.
- All executive sessions would be recorded.
- Any recording of an executive session would be released to the public only upon a unanimous vote of the city council or as otherwise provided by state law.
- The authority to hold executive sessions would expire on December 31, 2017.

The 2008 proposal included a provision that would have allowed the city council to adopt additional procedural rules at least as strict as those required by state law. There were concerns expressed by some that this gave the council some leeway in interpreting state law. Accordingly, staff recommends that the Charter provide expressly that council will follow state law. It is noteworthy that one court has held that a city council's failure to follow strictly the state law requirements for executive sessions invalidated the confidential protection for the meeting. As a result, the court ordered that the minutes be made public. *Gumina v. City of Sterling*, 119 P.3d 527 (Colo. App. 2004). Thus, it is likely that the state law requirements will be followed carefully.

State law requirements for executive sessions include the following:

- The state law procedures for an executive session limit executive sessions to regular or special meetings of the council. The minutes of the meeting must reflect that the council went into executive session pursuant to C.R.S. 24-6-402(4) and the statutory reason for going into executive session and the reasons for the executive session "in as much detail as possible without compromising the purpose for which the executive session is authorized".
- The motion to go into executive session must be approved by two-thirds of the quorum present.
- No policy, position, resolution, rule, regulation or formal action may occur in the executive session. C.R.S. 24-6-402(4).
- The executive session must be electronically recorded.
- The separate recording for the executive session must include the specific subparagraph of the statute under which the executive session is authorized. C.R.S. 24-6-402(2)(d.5)(II)(A).
- If the executive session constitutes privileged attorney-client communication, no electronic recording of that portion is required. The recording shall reflect that no

recording was kept of the privileged communication based on the opinion of the city attorney. C.R.S. 24-6-402(2)(d.5)(II)(B).

- If a court finds, upon an application by someone seeking access to the record of the executive session, after an in camera review, determines that the council engaged in substation discussion on a matter not authorized for executive session, the portion of the record of that discussion shall be open to public inspection. C.R.S. 24-6-402(2)(d.5)(II)(C).
- The recording of the executive session must be retained for at least 90 days after the date of the executive session. C.R.S. 24-6-402(2)(d.5)(II)(E).
- No portion of the record of an executive session shall be open for public inspection or subject to discovery in any administrative or judicial proceedings, except upon consent of the local public body. C.R.S. 24-6-402(2)(d.5)(II)(D)

There is a process under state law for a court to review a request to release the record of an executive session. Staff recommends that the provision allowing for council to release any portion of the recording of the executive session require unanimous consent from council. The reason for this recommendation is to prevent the possibility that a majority could release a recording to embarrass a minority. For sessions to be effective council members must be free to express their opinions, even if not supported by a majority.

Finally, staff recommends that the authority to hold executive sessions be limited in time. Staff recommends that a firm date be included in the proposed charter provision. There are several reasons for this recommendation. First, it should be clear whether the provision is effective or not. A firm date provides for such clarity. Second, other possibilities considered left some level of ambiguity in when the authority ended. For example, staff considered a provision that allowed for executive sessions until all legal proceedings related to the creation of the utility reached final judgment. With the possibility of post condemnation appeals, this could allow for executive sessions well into the future. There is no magic to the date December 31, 2017. It is the date that council chose to end the utility occupation tax.

ATTACHMENTS

Attachment A: Proposed Ordinance Amending Charter
Attachment B: Ordinance 7600
Attachment C: State Open Meetings Law

This Page Intentionally Left Blank

ORDINANCE NO. _____

AN ORDINANCE SUBMITTING TO THE QUALIFIED ELECTORS OF THE CITY OF BOULDER AT THE SPECIAL MUNICIPAL COORDINATED ELECTION TO BE HELD ON TUESDAY, NOVEMBER 4, 2014, THE QUESTION OF AMENDING CITY CHARTER SECTION 9 TO PROVIDE THAT THE CITY COUNCIL MAY MEET IN EXECUTIVE SESSION ONLY FOR THE PURPOSE OF DISCUSSING LEGAL ADVICE AND NEGOTIATION STRATEGY RELATING TO THE CREATION OF A MUNICIPAL ELECTRICAL UTILITY, WITH SUCH AUTHORITY ENDING ON DECEMBER 31, 2017; SETTING FORTH THE BALLOT TITLE; AND SPECIFYING THE FORM OF THE BALLOT AND OTHER RELATED DETAILS.

BE IT ORDAINED BY THE CITY COUNCIL OF THE CITY OF BOULDER, COLORADO:

Section 1. A special municipal coordinated election will be held in the city of Boulder, county of Boulder and state of Colorado, on Tuesday, November 4, 2014.

Section 2. At that election, a question shall be submitted to the electors of the city of Boulder entitled by law to vote, that will allow voters to consider the following amendment to Section 9 of the city Charter pertaining to convening executive sessions of the council (material to be added to the Charter is shown by underlining and material to be deleted is shown stricken through with solid lines):

Section 9: Meetings of Council

…

All meetings of the council or committees thereof shall be public. However, the council may meet in executive session for the purpose of discussion legal advice with respect to the creation of a municipal electrical utility or discussing negotiation strategy with respect to the creation of a municipal electrical utility.

All executive sessions shall be conducted according to state law. The following additional special procedural rules shall apply to every executive session:

(a) No final action may be taken in an executive session.

(b) An executive session shall be initiated only by a 2/3 vote of those council members present at a council meeting.

(c) All executive sessions shall be recorded.

(d) Any recording of an executive session shall be released to the public only upon a unanimous vote of the city council or as otherwise provided by state law.

The authority to hold executive sessions shall expire on December 31, 2017.

The council shall cause to be kept a complete journal of its proceedings and, except with reference to the journal of executive sessions, any citizen shall have access to the same at all reasonable times.

…

The official ballot shall contain the following ballot title, which shall also be the designation and submission clause for the measure:

Ballot Question No. ___

City Council Executive Sessions Related to Municipalization

Shall Section 9 of the Charter be amended pursuant to Ordinance No. ____ to authorize, until December 31, 2017, the city council to meet in executive session to discuss legal advice or negotiating strategy relating to the creation of a municipal electrical utility?

For the Measure ____ Against the Measure ____

Section 3. If a majority of all the votes cast at the election on the measure submitted are for the measure, the measure shall be deemed to have passed.

Section 4. The election shall be conducted under the provisions of the Colorado Constitution, the Charter and ordinances of the city, the Boulder Revised Code, 1981, and this

ordinance, and all contrary provisions of the statutes of the state of Colorado are hereby superseded.

Section 5. The city clerk of the city of Boulder shall give public notice of the election in the manner required by law for Charter amendments.

Section 6. The notice of the election shall include the ballot title.

Section 7. The officers of the city are authorized to take all action necessary or appropriate to effectuate the provisions of this ordinance and to contract with the county clerk to conduct the election for the city.

Section 8. If any section, paragraph, clause, or provision of this ordinance shall for any reason be held to be invalid or unenforceable, such decision shall not affect any of the remaining provisions of this ordinance.

Section 9. This ordinance is necessary to protect the public health, safety and welfare of the residents of the city, and covers matters of local concern.

Section 10. The council deems it appropriate that this ordinance be published by title only and orders that copies of this ordinance be made available in the office of the city clerk for public inspection and acquisition.

INTRODUCED, READ ON FIRST READING, AMENDED, AND ORDERED PUBLISHED BY TITLE ONLY this 22nd day of July 2014.

.

Mayor

Attest:

City Clerk on behalf of the
Director of Finance and Record

READ ON SECOND READING, PASSED, ADOPTED, AND ORDERED

PUBLISHED BY TITLE ONLY this 5th day of August, 2014.

Mayor

Attest:

City Clerk on behalf of the
Director of Finance and Record

ORDINANCE NO. 7600

AN ORDINANCE SUBMITTING TO THE QUALIFIED ELECTORS OF THE CITY OF BOULDER AT THE SPECIAL MUNICIPAL COORDINATED ELECTION TO BE HELD ON TUESDAY, NOVEMBER 4, 2008, THE QUESTION OF AMENDING CITY CHARTER SECTION 9 TO PROVIDE THAT THE CITY COUNCIL MAY MEET IN EXECUTIVE SESSION UNDER LIMITED CIRCUMSTANCES AND FOR LIMTED PURPOSES; SETTING FORTH THE BALLOT TITLE; AND SPECIFYING THE FORM OF THE BALLOT AND OTHER ELECTION PROCEDURES.

BE IT ORDAINED BY THE CITY COUNCIL OF THE CITY OF BOULDER, COLORADO:

Section 1. A special municipal coordinated election will be held in the city of Boulder, county of Boulder and state of Colorado, on Tuesday, November 4, 2008, between the hours of 7 a.m. and 7 p.m.

Section 2. At that election, a question shall be submitted to the electors of the city of Boulder entitled by law to vote, that will allow voters to consider the following amendment to Section 9 of the city Charter pertaining to convening executive sessions of the council (material to be added to the Charter is shown by double underlining and material to be deleted is shown stricken through with solid lines):

Section 9: Meetings of Council

...

All meetings of the council or committees thereof shall be public. However, the council may meet in executive session for the purpose of discussing sensitive matters in which premature public disclosure would be contrary to the public interest. The following types of executive sessions, and only these types, shall be permitted as meeting that purpose:

(a) To discuss confidential issues relating to the purchase, acquisition, lease, transfer or sale of property;

(b) To receive confidential legal advice on a specific legal case or question;

(c) To discuss confidential details of security arrangements or investigations;

(d) To discuss confidential issues relating to ongoing negotiations and negotiating strategy; or

(e) To discuss hiring and personnel matters with regard to one of the council's three employees, so long as the council employee who would be the subject of such a discussion is notified and is provided with an opportunity to require that the discussion be held in public.

The following special procedural rules shall apply to every executive session:

(a) No final action may be taken in an executive session.

(b) Council may meet in executive session only pursuant to a duly enacted city ordinance that sets forth procedural rules for the holding of executive sessions that are at least as restrictive as those set forth in the laws of the state of Colorado pertaining to the holding of executive sessions.

(c) An executive session shall be initiated only by a 2/3 vote of those council members present at a council meeting.

The council shall cause to be kept a complete journal of its proceedings~~,~~ and, except with reference to the journal of executive sessions, any citizen shall have access to the same at all reasonable times.

...

The official ballot shall contain the following ballot title, which shall also be the designation and submission clause for the measure:

Ballot Question No. ___

City Council Executive Sessions

Shall Section 9 of the Charter be amended pursuant to Ordinance No. 7600 in order to allow city council to meet in executive session to discuss sensitive matters where premature disclosure would be contrary to the public interest?

Executive sessions will only be held in conformity with locally enacted procedural rules that are at least as restrictive as those set forth in the laws of the state of Colorado and only upon a 2/3 vote of council members present at a meeting. No final action will be allowed at executive sessions.

The only subjects that will be discussed in executive sessions are:

(1) Confidential issues associated with the purchase, acquisition, lease, transfer or sale of property;

(2) Confidential legal advice;

(3) Confidential security matters or investigations;

(4) Confidential issues relating to ongoing negotiations and negotiating strategy; or

(5) Hiring and personnel matters pertaining to one of the council's three employees, so long as the subject council employee is able to require that the discussion be held in public.

For the Measure ____ Against the Measure ____

Section 3. If a majority of all the votes cast at the election on the measure submitted are for the measure, the measure shall be deemed to have passed.

Section 4. The election shall be conducted under the provisions of the Colorado Constitution, the Charter and ordinances of the city, the Boulder Revised Code, 1981, and this ordinance, and all contrary provisions of the statutes of the state of Colorado are hereby superseded.

Section 5. The city clerk of the city of Boulder shall give public notice of the election in the manner required by law for Charter amendments.

Section 6. The notice of the election shall include the ballot title.

Section 7. The officers of the city are authorized to take all action necessary or appropriate to effectuate the provisions of this ordinance and to contract with the county clerk to conduct the election for the city.

Section 8. If any section, paragraph, clause, or provision of this ordinance shall for any reason be held to be invalid or unenforceable, such decision shall not affect any of the remaining provisions of this ordinance.

Section 9. This ordinance is necessary to protect the public health, safety and welfare of the residents of the city, and covers matters of local concern.

Section 10. The council deems it appropriate that this ordinance be published by title only and orders that copies of this ordinance be made available in the office of the city clerk for public inspection and acquisition.

INTRODUCED, READ ON FIRST READING, AMENDED, AND ORDERED PUBLISHED BY TITLE ONLY this 8th day of July 2008.

Mayor

Attest:

City Clerk on behalf of the
Director of Finance and Record

READ ON SECOND READING, PASSED, ADOPTED, AND ORDERED PUBLISHED BY TITLE ONLY this 5th day of August, 2008.

Mayor

Attest:

City Clerk on behalf of the
Director of Finance and Record

STATE OF COLORADO)
COUNTY OF BOULDER) SS:
CITY OF BOULDER)

ORDINANCE NO. 7600

I, Sandy North, Deputy City Clerk of said City in the County and State aforesaid, do hereby certify that the foregoing ordinance was:

Introduced, read on first reading on the **8th** day of **July 2008** and published by title only on the **11th** day of **July 2008** in the official paper of said City. That said publication was ten days before the passage of said ordinance.

Duly and regularly **passed and adopted**, by the City Council of said City on **second reading** at a regular meeting thereof held on the **5th** day of **August 2008**, and published by title only on the **8th** day of **August 2008** in the official paper of said City.

WITNESS my hand and the seal of said City of Boulder hereto affixed, this **11th** day of **August 2008.**

S.L. North
Deputy City Clerk

(seal)

2500 Public Notice 2500 Public Notice

7600

AN ORDINANCE SUBMITTING TO THE QUALIFIED ELECTORS OF THE CITY OF BOULDER AT THE SPECIAL MUNICIPAL COORDINATED ELECTION TO BE HELD ON TUESDAY, NOVEMBER 4, 2008, THE QUESTION OF AMENDING CITY CHARTER SECTION 9 TO PROVIDE THAT THE CITY COUNCIL MAY MEET IN EXECUTIVE SESSION UNDER LIMITED CIRCUMSTANCES AND FOR LIMITED PURPOSES; SETTING FORTH THE BALLOT TITLE; AND SPECIFYING THE FORM OF THE BALLOT AND OTHER ELECTION PROCEDURES.

(The published text of the above ordinance is available for public inspection and acquisition in the Office of the City Clerk, Municipal Building, 1777 Broadway, Boulder, CO 80302.)

INTRODUCED, READ AND ORDERED PUBLISHED BY TITLE ONLY THIS 8th DAY OF JULY 2008.

Shaun McGrath
Mayor

ATTEST:

Alisa D. Lewis
City Clerk

Motion Carried: 8:1 Gray Opposed

Published in the Camera on
July 11, 2008 - 5424812

2500 Public Notice 2500 Public Notice

7600

AN ORDINANCE SUBMITTING TO THE QUALIFIED ELECTORS OF THE CITY OF BOULDER AT THE SPECIAL MUNICIPAL COORDINATED ELECTION TO BE HELD ON TUESDAY, NOVEMBER 4, 2008, THE QUESTION OF AMENDING CITY CHARTER SECTION 9 TO PROVIDE THAT THE CITY COUNCIL MAY MEET IN EXECUTIVE SESSION UNDER LIMITED CIRCUMSTANCES AND FOR LIMITED PURPOSES; SETTING FORTH THE BALLOT TITLE; AND SPECIFYING THE FORM OF THE BALLOT AND OTHER ELECTION PROCEDURES.

(The published text of the above ordinance is available for public inspection and acquisition in the Office of the City Clerk, Municipal Building, 1777 Broadway, Boulder, CO 80302.)

INTRODUCED, READ AND ORDERED PUBLISHED BY TITLE ONLY THIS 8th DAY OF JULY 2008.

READ ON SECOND READING, ADOPTED AND ORDERED PUBLISHED BY TITLE ONLY THIS 5th DAY OF AUGUST 2008.

Shaun McGrath
Mayor

ATTEST:

Alisa D. Lewis
City Clerk

Motion Carried: 7:1 Morzel Opposed, Wilson Absent

Published in the Camera on
August 8, 2008 - 5427509

West's Colorado Revised Statutes Annotated
Title 24. Government--State Administration
Article 6. Colorado Sunshine Law (Refs & Annos)
Part 4. Open Meetings Law (Refs & Annos)

C.R.S.A. § 24-6-402

§ 24-6-402. Meetings--open to public--definitions

Effective: June 6, 2014
Currentness

(1) For the purposes of this section:

(a) "Local public body" means any board, committee, commission, authority, or other advisory, policy-making, rule-making, or formally constituted body of any political subdivision of the state and any public or private entity to which a political subdivision, or an official thereof, has delegated a governmental decision-making function but does not include persons on the administrative staff of the local public body.

(b) "Meeting" means any kind of gathering, convened to discuss public business, in person, by telephone, electronically, or by other means of communication.

(c) "Political subdivision of the state" includes, but is not limited to, any county, city, city and county, town, home rule city, home rule county, home rule city and county, school district, special district, local improvement district, special improvement district, or service district.

(d) "State public body" means any board, committee, commission, or other advisory, policy-making, rule-making, decision-making, or formally constituted body of any state agency, state authority, governing board of a state institution of higher education including the regents of the university of Colorado, a nonprofit corporation incorporated pursuant to section 23-5-121(2), C.R.S., or the general assembly, and any public or private entity to which the state, or an official thereof, has delegated a governmental decision-making function but does not include persons on the administrative staff of the state public body.

(2)(a) All meetings of two or more members of any state public body at which any public business is discussed or at which any formal action may be taken are declared to be public meetings open to the public at all times.

(b) All meetings of a quorum or three or more members of any local public body, whichever is fewer, at which any public business is discussed or at which any formal action may be taken are declared to be public meetings open to the public at all times.

(c) Any meetings at which the adoption of any proposed policy, position, resolution, rule, regulation, or formal action occurs or at which a majority or quorum of the body is in attendance, or is expected to be in attendance, shall be held only after full and timely notice to the public. In addition to any other means of full and timely notice, a local public body shall be deemed

WestlawNext © 2014 Thomson Reuters. No claim to original U.S. Government Works.

to have given full and timely notice if the notice of the meeting is posted in a designated public place within the boundaries of the local public body no less than twenty-four hours prior to the holding of the meeting. The public place or places for posting such notice shall be designated annually at the local public body's first regular meeting of each calendar year. The posting shall include specific agenda information where possible.

(d)(I) Minutes of any meeting of a state public body shall be taken and promptly recorded, and such records shall be open to public inspection. The minutes of a meeting during which an executive session authorized under subsection (3) of this section is held shall reflect the topic of the discussion at the executive session.

(II) Minutes of any meeting of a local public body at which the adoption of any proposed policy, position, resolution, rule, regulation, or formal action occurs or could occur shall be taken and promptly recorded, and such records shall be open to public inspection. The minutes of a meeting during which an executive session authorized under subsection (4) of this section is held shall reflect the topic of the discussion at the executive session.

(III) If elected officials use electronic mail to discuss pending legislation or other public business among themselves, the electronic mail shall be subject to the requirements of this section. Electronic mail communication among elected officials that does not relate to pending legislation or other public business shall not be considered a “meeting” within the meaning of this section.

(IV) Neither a state nor a local public body may adopt any proposed policy, position, resolution, rule, or regulation or take formal action by secret ballot unless otherwise authorized in accordance with the provisions of this subparagraph (IV). Notwithstanding any other provision of this section, a vote to elect leadership of a state or local public body by that same public body may be taken by secret ballot, and a secret ballot may be used in connection with the election by a state or local public body of members of a search committee, which committee is otherwise subject to the requirements of this section, but the outcome of the vote shall be recorded contemporaneously in the minutes of the body in accordance with the requirements of this section. Nothing in this subparagraph (IV) shall be construed to affect the authority of a board of education to use a secret ballot in accordance with the requirements of section 22-32-108(6), C.R.S. For purposes of this subparagraph (IV), “secret ballot” means a vote cast in such a way that the identity of the person voting or the position taken in such vote is withheld from the public.

(d.5)(I)(A) Discussions that occur in an executive session of a state public body shall be electronically recorded. If a state public body electronically recorded the minutes of its open meetings on or after August 8, 2001, the state public body shall continue to electronically record the minutes of its open meetings that occur on or after August 8, 2001; except that electronic recording shall not be required for two successive meetings of the state public body while the regularly used electronic equipment is inoperable. A state public body may satisfy the electronic recording requirements of this sub-subparagraph (A) by making any form of electronic recording of the discussions in an executive session of the state public body. Except as provided in sub-subparagraph (B) of this subparagraph (I), the electronic recording of an executive session shall reflect the specific citation to the provision in subsection (3) of this section that authorizes the state public body to meet in an executive session and the actual contents of the discussion during the session. The provisions of this sub-subparagraph (A) shall not apply to discussions of individual students by a state public body pursuant to paragraph (b) of subsection (3) of this section.

(B) If, in the opinion of the attorney who is representing a governing board of a state institution of higher education, including the regents of the university of Colorado, and is in attendance at an executive session that has been properly announced pursuant to paragraph (a) of subsection (3) of this section, all or a portion of the discussion during the executive session constitutes a privileged attorney-client communication, no record or electronic recording shall be required to be kept of the part of the discussion that constitutes a privileged attorney-client communication. The electronic recording of said executive session

WestlawNext © 2014 Thomson Reuters. No claim to original U.S. Government Works.

discussion shall reflect that no further record or electronic recording was kept of the discussion based on the opinion of the attorney representing the governing board of a state institution of higher education, including the regents of the university of Colorado, as stated for the record during the executive session, that the discussion constituted a privileged attorney-client communication, or the attorney representing the governing board of a state institution of higher education, including the regents of the university of Colorado, may provide a signed statement attesting that the portion of the executive session that was not recorded constituted a privileged attorney-client communication in the opinion of the attorney.

(C) If a court finds, upon application of a person seeking access to the record of the executive session of a state public body in accordance with section 24-72-204(5.5) and after an in camera review of the record of the executive session, that the state public body engaged in substantial discussion of any matters not enumerated in subsection (3) of this section or that the body adopted a proposed policy, position, resolution, rule, regulation, or formal action in the executive session in contravention of paragraph (a) of subsection (3) of this section, the portion of the record of the executive session that reflects the substantial discussion of matters not enumerated in subsection (3) of this section or the adoption of a proposed policy, position, resolution, rule, regulation, or formal action shall be open to public inspection pursuant to section 24-72-204(5.5).

(D) No portion of the record of an executive session of a state public body shall be open for public inspection or subject to discovery in any administrative or judicial proceeding, except upon the consent of the state public body or as provided in sub-subparagraph (C) of this subparagraph (I) and section 24-72-204(5.5).

(E) The record of an executive session of a state public body recorded pursuant to sub-subparagraph (A) of this subparagraph (I) shall be retained for at least ninety days after the date of the executive session.

(II)(A) Discussions that occur in an executive session of a local public body shall be electronically recorded. If a local public body electronically recorded the minutes of its open meetings on or after August 8, 2001, the local public body shall continue to electronically record the minutes of its open meetings that occur on or after August 8, 2001; except that electronic recording shall not be required for two successive meetings of the local public body while the regularly used electronic equipment is inoperable. A local public body may satisfy the electronic recording requirements of this sub-subparagraph (A) by making any form of electronic recording of the discussions in an executive session of the local public body. Except as provided in sub-subparagraph (B) of this subparagraph (II), the electronic recording of an executive session shall reflect the specific citation to the provision in subsection (4) of this section that authorizes the local public body to meet in an executive session and the actual contents of the discussion during the session. The provisions of this sub-subparagraph (A) shall not apply to discussions of individual students by a local public body pursuant to paragraph (h) of subsection (4) of this section.

(B) If, in the opinion of the attorney who is representing the local public body and who is in attendance at an executive session that has been properly announced pursuant to subsection (4) of this section, all or a portion of the discussion during the executive session constitutes a privileged attorney-client communication, no record or electronic recording shall be required to be kept of the part of the discussion that constitutes a privileged attorney-client communication. The electronic recording of said executive session discussion shall reflect that no further record or electronic recording was kept of the discussion based on the opinion of the attorney representing the local public body, as stated for the record during the executive session, that the discussion constituted a privileged attorney-client communication, or the attorney representing the local public body may provide a signed statement attesting that the portion of the executive session that was not recorded constituted a privileged attorney-client communication in the opinion of the attorney.

(C) If a court finds, upon application of a person seeking access to the record of the executive session of a local public body in accordance with section 24-72-204(5.5) and after an in camera review of the record of the executive session, that the local

WestlawNext © 2014 Thomson Reuters. No claim to original U.S. Government Works.

public body engaged in substantial discussion of any matters not enumerated in subsection (4) of this section or that the body adopted a proposed policy, position, resolution, rule, regulation, or formal action in the executive session in contravention of subsection (4) of this section, the portion of the record of the executive session that reflects the substantial discussion of matters not enumerated in subsection (4) of this section or the adoption of a proposed policy, position, resolution, rule, regulation, or formal action shall be open to public inspection pursuant to section 24-72-204(5.5).

(D) No portion of the record of an executive session of a local public body shall be open for public inspection or subject to discovery in any administrative or judicial proceeding, except upon the consent of the local public body or as provided in sub-subparagraph (C) of this subparagraph (II) and section 24-72-204(5.5).

(E) Except as otherwise required by section 22-32-108(5)(e), C.R.S., the record of an executive session of a local public body recorded pursuant to sub-subparagraph (A) of this subparagraph (II) shall be retained for at least ninety days after the date of the executive session.

(e) This part 4 does not apply to any chance meeting or social gathering at which discussion of public business is not the central purpose.

(f) The provisions of paragraph (c) of this subsection (2) shall not be construed to apply to the day-to-day oversight of property or supervision of employees by county commissioners. Except as set forth in this paragraph (f), the provisions of this paragraph (f) shall not be interpreted to alter any requirements of paragraph (c) of this subsection (2).

(3)(a) The members of a state public body subject to this part 4, upon the announcement by the state public body to the public of the topic for discussion in the executive session, including specific citation to the provision of this subsection (3) authorizing the body to meet in an executive session and identification of the particular matter to be discussed in as much detail as possible without compromising the purpose for which the executive session is authorized, and the affirmative vote of two-thirds of the entire membership of the body after such announcement, may hold an executive session only at a regular or special meeting and for the sole purpose of considering any of the matters enumerated in paragraph (b) of this subsection (3) or the following matters; except that no adoption of any proposed policy, position, resolution, rule, regulation, or formal action, except the review, approval, and amendment of the minutes of an executive session recorded pursuant to subparagraph (I) of paragraph (d.5) of subsection (2) of this section, shall occur at any executive session that is not open to the public:

(I) The purchase of property for public purposes, or the sale of property at competitive bidding, if premature disclosure of information would give an unfair competitive or bargaining advantage to a person whose personal, private interest is adverse to the general public interest. No member of the state public body shall use this paragraph (a) as a subterfuge for providing covert information to prospective buyers or sellers. Governing boards of state institutions of higher education including the regents of the university of Colorado may also consider the acquisition of property as a gift in an executive session, only if such executive session is requested by the donor.

(II) Conferences with an attorney representing the state public body concerning disputes involving the public body that are the subject of pending or imminent court action, concerning specific claims or grievances, or for purposes of receiving legal advice on specific legal questions. Mere presence or participation of an attorney at an executive session of a state public body is not sufficient to satisfy the requirements of this subsection (3).

WestlawNext © 2014 Thomson Reuters. No claim to original U.S. Government Works.

(III) Matters required to be kept confidential by federal law or rules, state statutes, or in accordance with the requirements of any joint rule of the senate and the house of representatives pertaining to lobbying practices;

(IV) Specialized details of security arrangements or investigations, including defenses against terrorism, both domestic and foreign, and including where disclosure of the matters discussed might reveal information that could be used for the purpose of committing, or avoiding prosecution for, a violation of the law;

(V) Determining positions relative to matters that may be subject to negotiations with employees or employee organizations; developing strategy for and receiving reports on the progress of such negotiations; and instructing negotiators;

(VI) With respect to the board of regents of the university of Colorado and the board of directors of the university of Colorado hospital authority created pursuant to article 21 of title 23, C.R.S., matters concerning the modification, initiation, or cessation of patient care programs at the university hospital operated by the university of Colorado hospital authority pursuant to part 5 of article 21 of title 23, C.R.S., (including the university of Colorado psychiatric hospital), and receiving reports with regard to any of the above, if premature disclosure of information would give an unfair competitive or bargaining advantage to any person or entity;

(VII) With respect to nonprofit corporations incorporated pursuant to section 23-5-121(2), C.R.S., matters concerning trade secrets, privileged information, and confidential commercial, financial, geological, or geophysical data furnished by or obtained from any person;

(VIII) With respect to the governing board of a state institution of higher education and any committee thereof, consideration of nominations for the awarding of honorary degrees, medals, and other honorary awards by the institution and consideration of proposals for the naming of a building or a portion of a building for a person or persons.

(b)(I) All meetings held by members of a state public body subject to this part 4 to consider the appointment or employment of a public official or employee or the dismissal, discipline, promotion, demotion, or compensation of, or the investigation of charges or complaints against, a public official or employee shall be open to the public unless said applicant, official, or employee requests an executive session. Governing boards of institutions of higher education including the regents of the university of Colorado may, upon their own affirmative vote, hold executive sessions to consider the matters listed in this paragraph (b). Executive sessions may be held to review administrative actions regarding investigation of charges or complaints and attendant investigative reports against students where public disclosure could adversely affect the person or persons involved, unless the students have specifically consented to or requested the disclosure of such matters. An executive session may be held only at a regular or special meeting of the state public body and only upon the announcement by the public body to the public of the topic for discussion in the executive session and the affirmative vote of two-thirds of the entire membership of the body after such announcement.

(II) The provisions of subparagraph (I) of this paragraph (b) shall not apply to discussions concerning any member of the state public body, any elected official, or the appointment of a person to fill the office of a member of the state public body or an elected official or to discussions of personnel policies that do not require the discussion of matters personal to particular employees.

WestlawNext © 2014 Thomson Reuters. No claim to original U.S. Government Works.

(c) Notwithstanding the provisions of paragraphs (a) and (b) of this subsection (3), the state board of parole created in part 2 of article 2 of title 17, C.R.S., may proceed in executive session to consider matters connected with any parole proceedings under the jurisdiction of said board; except that no final parole decisions shall be made by said board while in executive session. Such executive session may be held only at a regular or special meeting of the state board of parole and only upon the affirmative vote of two-thirds of the membership of the board present at such meeting.

(d) Notwithstanding any provision of paragraph (a) or (b) of this subsection (3) to the contrary, upon the affirmative vote of two-thirds of the members of the governing board of an institution of higher education who are authorized to vote, the governing board may hold an executive session in accordance with the provisions of this subsection (3).

(3.5) A search committee of a state public body or local public body shall establish job search goals, including the writing of the job description, deadlines for applications, requirements for applicants, selection procedures, and the time frame for appointing or employing a chief executive officer of an agency, authority, institution, or other entity at an open meeting. The state or local public body shall make public the list of all finalists under consideration for the position of chief executive officer no later than fourteen days prior to appointing or employing one of the finalists to fill the position. No offer of appointment or employment shall be made prior to this public notice. Records submitted by or on behalf of a finalist for such position shall be subject to the provisions of section 24-72-204(3)(a)(XI). As used in this subsection (3.5), “finalist” shall have the same meaning as in section 24-72-204(3)(a)(XI). Nothing in this subsection (3.5) shall be construed to prohibit a search committee from holding an executive session to consider appointment or employment matters not described in this subsection (3.5) and otherwise authorized by this section.

(4) The members of a local public body subject to this part 4, upon the announcement by the local public body to the public of the topic for discussion in the executive session, including specific citation to the provision of this subsection (4) authorizing the body to meet in an executive session and identification of the particular matter to be discussed in as much detail as possible without compromising the purpose for which the executive session is authorized, and the affirmative vote of two-thirds of the quorum present, after such announcement, may hold an executive session only at a regular or special meeting and for the sole purpose of considering any of the following matters; except that no adoption of any proposed policy, position, resolution, rule, regulation, or formal action, except the review, approval, and amendment of the minutes of an executive session recorded pursuant to subparagraph (II) of paragraph (d.5) of subsection (2) of this section, shall occur at any executive session that is not open to the public:

(a) The purchase, acquisition, lease, transfer, or sale of any real, personal, or other property interest; except that no executive session shall be held for the purpose of concealing the fact that a member of the local public body has a personal interest in such purchase, acquisition, lease, transfer, or sale;

(b) Conferences with an attorney for the local public body for the purposes of receiving legal advice on specific legal questions. Mere presence or participation of an attorney at an executive session of the local public body is not sufficient to satisfy the requirements of this subsection (4).

(c) Matters required to be kept confidential by federal or state law or rules and regulations. The local public body shall announce the specific citation of the statutes or rules that are the basis for such confidentiality before holding the executive session.

WestlawNext © 2014 Thomson Reuters. No claim to original U.S. Government Works.

(d) Specialized details of security arrangements or investigations, including defenses against terrorism, both domestic and foreign, and including where disclosure of the matters discussed might reveal information that could be used for the purpose of committing, or avoiding prosecution for, a violation of the law;

(e) Determining positions relative to matters that may be subject to negotiations; developing strategy for negotiations; and instructing negotiators;

(f)(I) Personnel matters except if the employee who is the subject of the session has requested an open meeting, or if the personnel matter involves more than one employee, all of the employees have requested an open meeting. With respect to hearings held pursuant to the "Teacher Employment, Compensation, and Dismissal Act of 1990", article 63 of title 22, C.R.S., the provisions of section 22-63-302(7)(a), C.R.S., shall govern in lieu of the provisions of this subsection (4).

(II) The provisions of subparagraph (I) of this paragraph (f) shall not apply to discussions concerning any member of the local public body, any elected official, or the appointment of a person to fill the office of a member of the local public body or an elected official or to discussions of personnel policies that do not require the discussion of matters personal to particular employees.

(g) Consideration of any documents protected by the mandatory nondisclosure provisions of the "Colorado Open Records Act", part 2 of article 72 of this title; except that all consideration of documents or records that are work product as defined in section 24-72-202(6.5) or that are subject to the governmental or deliberative process privilege shall occur in a public meeting unless an executive session is otherwise allowed pursuant to this subsection (4);

(h) Discussion of individual students where public disclosure would adversely affect the person or persons involved.

(5) Deleted by Laws 1996, H.B.96-1314, § 1, eff. July 1, 1996.

(6) The limitations imposed by subsections (3), (4), and (5) of this section do not apply to matters which are covered by section 14 of article V of the state constitution.

(7) The secretary or clerk of each state public body or local public body shall maintain a list of persons who, within the previous two years, have requested notification of all meetings or of meetings when certain specified policies will be discussed and shall provide reasonable advance notification of such meetings, provided, however, that unintentional failure to provide such advance notice will not nullify actions taken at an otherwise properly published meeting. The provisions of this subsection (7) shall not apply to the day-to-day oversight of property or supervision of employees by county commissioners, as provided in paragraph (f) of subsection (2) of this section.

(8) No resolution, rule, regulation, ordinance, or formal action of a state or local public body shall be valid unless taken or made at a meeting that meets the requirements of subsection (2) of this section.

(9)(a) Any person denied or threatened with denial of any of the rights that are conferred on the public by this part 4 has suffered an injury in fact, and therefore, has standing to challenge the violation of this part 4.

WestlawNext © 2014 Thomson Reuters. No claim to original U.S. Government Works.

(b) The courts of record of this state shall have jurisdiction to issue injunctions to enforce the purposes of this section upon application by any citizen of this state. In any action in which the court finds a violation of this section, the court shall award the citizen prevailing in such action costs and reasonable attorney fees. In the event the court does not find a violation of this section, it shall award costs and reasonable attorney fees to the prevailing party if the court finds that the action was frivolous, vexatious, or groundless.

(10) Any provision of this section declared to be unconstitutional or otherwise invalid shall not impair the remaining provisions of this section, and, to this end, the provisions of this section are declared to be severable.

Credits

Amended by Laws 1977, H.B.1018, § 1; Laws 1977, H.B.1503, § 1; Laws 1985, H.B.1097, § 6; Laws 1987, H.B.1018, § 1; Laws 1989, H.B.1143, § 4; Laws 1991, S.B.91-33, § 2, eff. June 1, 1991; Laws 1991, S.B.91-225, § 6; Laws 1992, H.B.92-1167, § 1, eff. April 23, 1992; Laws 1996, H.B.96-1314, § 1, eff. July 1, 1996; Laws 1996, S.B.96-212, § 3, eff. June 1, 1996; Laws 1997, S.B.97-59, § 1, eff. April 14, 1997; Laws 1999, Ch. 72, § 1, eff. March 31, 1999; Laws 2000, Ch. 117, §§ 4, 5, eff. April 13, 2000; Laws 2001, Ch. 63, § 5, eff. March 27, 2001; Laws 2001, Ch. 286, §§ 1, 2, eff. Aug. 8, 2001; Laws 2002, Ch. 35, § 1, eff. Aug. 7, 2002; Laws 2002, Ch. 86, § 7, eff. April 12, 2002; Laws 2002, Ch. 187, § 3, eff. May 24, 2002; Laws 2006, Ch. 2, § 1, eff. Aug. 7, 2006; Laws 2009, Ch. 94, § 1, eff. Aug. 5, 2009; Laws 2009, Ch. 369, § 74, eff. Aug. 5, 2009; Laws 2010, Ch. 391, § 40, eff. June 9, 2010; Laws 2012, Ch. 64, § 1, eff. March 24, 2012; Laws 2014, Ch. 380, § 1, eff. June 6, 2014; Laws 2014, Ch. 393, § 2, eff. June 6, 2014.

Notes of Decisions (59)

C. R. S. A. § 24-6-402, CO ST § 24-6-402
Current through laws effective July 1, 2014, see scope for further details

End of Document

© 2014 Thomson Reuters. No claim to original U.S. Government Works.

CITY OF BOULDER
CITY COUNCIL AGENDA ITEM

MEETING DATE: July 22, 2014

AGENDA TITLE: Introduction, first reading and consideration of a motion to publish by title only an ordinance submitting to the registered electors of the City of Boulder at the special municipal coordinated election to be held on Tuesday, November 4, 2014, the question of authorizing the city council to increase the sales and use tax by up to 0.3 cents on every dollar, effective from January 1, 2015 through December 31, 2017 for the purpose of funding a variety of capital improvement projects; giving approval for the collection, retention and expenditure of the full tax proceeds and any related earnings, notwithstanding any state revenue or expenditure limitation; and setting forth the effective date, ballot title, amendments to section 3-2-5, "Rate of Tax," B.R.C. 1981and related details.

PRESENTERS

Jane S. Brautigam, City Manager
Tom Carr, City Attorney
David Gehr, Deputy City Attorney
Bob Eichem, Chief Financial Officer
David Driskell, Executive Director of Community Planning and Sustainability
Maureen Rait, Executive Director of Public Works
Tracy Winfree, Director Public Works Transportation
Molly Winter, Director of Downtown, University Hill Management Division and Parking
Jeff Dillon, Director of Parks and Recreation
David Farnan, Director of Library and Arts
Alisa Lewis, City Clerk
Peggy Bunzli, Budget Officer
Elena Lazarevska, Senior Financial Analyst

EXECUTIVE SUMMARY

In preparation for the discussion of this agenda item, city council members have reviewed or considered potential 2014 ballot items in three previous meetings during 2014. The first was Feb. 18, the second was on Apr. 22, and the third was on Jun.17. At the June meeting Council expressed interest in placing a 0.3 percent sales and use tax increase for three years (2015, 2016 and 2017) on the ballot for the November 4, 2014 election.

During previous discussions projects have been classified as city projects and non-profit projects. That is, two thirds (0.2 percent of the 0.3 percent total) would be used to fund new city projects in the Civic Area, the Hill, and improvements to the pathway and lighting along the Boulder Creek path. One third (0.1 percent of the 0.3 percent) would be used contribution of matching funds to the renovation of the Museum of Boulder, renovation changes for the Dairy Center for the Arts, Chautauqua, and funding for other culture enhancements in Boulder.

As staff fleshed out options and projects this distinction became very blurred and no longer seemed applicable. Several projects clearly began to overlap both categories. In the case of the Dairy and Chautauqua the city owns many of the assets, and cultural enhancements in areas such as the arts are a part of the city's current programs. The only pure non-profit stand alone project is the museum project. The results of the proposed projects benefit the entire community. Therefore, in this memo staff has dropped the separation and now refers to the ballot proposal as a .3% for capital projects.

STAFF RECOMMENDATION

Suggested Motion Language:

Staff requests council consideration of this matter and action in the form of the following motion:

> Motion to introduce and order published by title only an ordinance submitting to the registered electors of the City of Boulder at the special municipal coordinated election to be held on Tuesday, November 4, 2014, the question of authorizing the city council to increase the sales and use tax by up to 0.3 cents on every dollar, effective from January 1, 2015 through December 31, 2017 for the purpose of funding a variety of capital improvement projects; giving approval for the collection, retention and expenditure of the full tax proceeds and any related earnings, notwithstanding any state revenue or expenditure limitation; and setting forth the effective date, ballot title, amendments to section 3-2-5, "Rate of Tax," B.R.C. 1981and related details.

COMMUNITY SUSTAINABILITY ASSESSMENTS AND IMPACTS

- Economic:
  - An increase in the sales and use tax rate would create an incremental economic impact equal to the amount of the tax increase approved by the

voters. Any increase would be charged on all retail purchases, and items subject to use tax for the length of the tax. The new revenue collected would provide increased funds for capital projects that can help the economic vitality of the city.

- Environmental:
  - It is expected that some of the capital projects that would be funded with this tax increase may generate more travel to the City of Boulder to enjoy the improvements made in the city. At the same time, the projects would include efficient and effective improvements to infrastructure, which would help address environmental sustainability.
- Social:
  - It is projected that an increase in the sales and use tax would provide more opportunities for everyone to enjoy the uniqueness of the quality of life in Boulder.

OTHER IMPACTS

- Fiscal: Three tenths percent increase in the sales and use tax rate for the City of Boulder would increase the tax on a hundred dollar purchase by thirty cents. Other fiscal impacts to the city are covered in the background and analysis sections of this agenda item.

- Staff time: The staff time needed to complete the background work for ballot items is included within the departmental work plans.

BOARD AND COMMISSION FEEDBACK

This is the formative stage of the ballot process so no board or commission feedback has been solicited at this time. If council decides to move a ballot issue forward on this first reading, any needed board or commission input would be sought following that decision.

PUBLIC FEEDBACK

This is the formative stage of the ballot process so no formal process has been used to solicit specific feedback at this time. The public hearings that will be held will provide the initial formal public feedback.

BACKGROUND and ANALYSIS

The following link leads to the Feb. 18 agenda packet when 2014 ballot items were considered briefly by the City Council.
February 18 Comprehensive Financial Strategy Update

As follow up to the Feb. 18 meeting, more specific ballot topics were considered at the April 22 study session. The summary and answers to most of the questions asked by council members at the April 22 study session were provided in the June 3 council packet under agenda item 3B starting on page 7. At the April 22 study session, ballot items were considered and reviewed in the context of the ongoing long range fiscal planning used by the city. An explanation of this and the progress made to date can be found in attachment

2 of the April 22 study session packet, starting on page 40. The following link leads to this attachment.
Attachment 2 - Long Range Fiscal Planning

At the June 17 Council meeting, the City Council discussed proposed recommendations and supported removal of the Flatirons Event Center item from consideration. Other city funds will be identified to complete this project and it will not be included in the proposed 2014 ballot item. Staff will provide information in the future regarding the source of funds for this change. Improvements to the Boulder Creek bike path and improved lighting on the path have been added to the proposed 2014 ballot item (See **Attachment E**).

The link for the June 17 meeting is:
June 17 Council Meeting - Potential Ballot Items

Subsequent to the June 17 council meeting a different project regarding Chautauqua arose. This project would address issues safety and lighting issues in the area that have been discussed for several years. The project would be challenging due to various requirements for historical compliance. Staff feels this project merits consideration by the City Council and it has been included as proposed for funding if this ballot issue moves forward. Information regarding the project can be found in **Attachment G.**

Pay As You Go (PAYG) Sales Tax for Capital Items
After significant discussion at the April 22 study session and the June 17 council meeting, there were indications that council would like to consider placing a PAYG question to the voters for the November 2014 election.

As staff worked to prepare a recommendation for council consideration at the April 22 study session, a set of filters was developed in order to help select the projects that might be most appropriate for a November 2014 ballot measure, proposing a three year PAYG financing plan. These filters are:

- Which projects do not belong because they should be resolved in the operating budget?
- Which projects are high priority and new, as opposed to ongoing maintenance backlogs that should be addressed in the operating budget?
- Which projects have accurate cost estimates, and which need a great deal more work and vetting, therefore, would not be ready for 2014 consideration?
- Of those projects that may have inaccurate cost estimates, which could be refined in a timely manner?
- Which projects will be impactful in the community to clearly demonstrate value and success using PAYG financing?

PAYG financing options

The following table was developed to assist council in discussing the possible options in terms of percentage increases in sales and use tax, as well as in the number of years the increase would be effective.

Rate	One Year Amount	Three years	Five Years
.1%	$3.0M	$9.0M	$15.0M
.2%	$6.1M	$18.3M	$30.5M
.3%	$9.2M	$27.6M	$46.0M

Staff Recommendation

Based upon staff review of the projects discussed in February and in light of a focus on shorter term projects that would be impactful to the community, the staff is recommending that city council consider placing a 0.3 percent - 3 year temporary sales and use tax on the ballot in November 2014 that would include the following projects:

Hill Projects (Attachment B):		
Residential Pedestrian Lighting	$2,000,000	
Commercial District Event Street	$ 750,000	
Commercial District Irrig. and St. Tree Improv.	$ 520,000	$3,270,000
Civic Area Initial Improvements – Begin Vision Plan **(Attachments C and D)**		$8,700,000
Boulder Creek Area (Attachment E):		
Boulder Creek Path Lighting	$1,040,000	
Boulder Creek Path Improvements	$ 885,000	
Arapahoe.13th Underpass	$2,500,000	
Eben Fine Park Stream Bank Restoration	$ 700,000	$5,125,000
Public Arts (Attachment F):		$ 600,000
Chautauqua Pedestrian Safety Access and Lighting: (Attachment G)		$1,500,000
Dairy Center for the Arts (Attachment H):		$3,850,000
Museum of Boulder (Attachment I):		$4,000,000
Contingency		$ 555,000
Total		$27,600,000
Estimated Revenue-3 years -.3%		$27,600,000
Difference		-0-

There are attachments for each of the projects, which can be found at the end of this agenda memo.

Other Cultural Enhancements in the City of Boulder
Prior to the April 22 study session, several culturally focused non-profits contacted the City Manager to request city funding for specific capital projects. Since that study session, additional information has been received regarding each of the proposals, and city council has received communications from each of them in support of using the proposed PAYG financing for their needs. Copies of the letters from each of the entities can be found in the April 22 study session packet, starting on page 33, as Exhibits B-D, at the link below.
April 22 Study Session - Letters from Non Profits

There are many non-profit organizations and facilities in the City of Boulder, some of which have a partnership with the city, and some of which do not. One of the goals of the upcoming Community Cultural Plan (that was discussed by City Council at the June 10 study session) will be to build a community vision for what important existing facilities/organizations should continue to receive direct support from the city and what others exist for which partnership with the city might be appropriate.

As an alternative to considering funding for the cultural facilities that have approached the city to date, to be considered for the upcoming PAYG discussion, funding requests could be considered in the future in the context of the completed Community Cultural Plan. This approach would delay funding for such projects until another ballot measure would be considered in the future. In light of initial interest that was expressed by council members, attachments G, H and I are included respectively for the Chautauqua, the Dairy Center for the Arts and for the Museum of Boulder projects.

Agreements Proposed for Use and Flow of Funds for Entities that Do Not Use City Financial and Accounting Internal Controls and Processes

If this ballot issue goes forward, all parties want it to be successful. At the same time, the handling of taxpayer funds requires due diligence, oversight for appropriate usage, accountability, and other appropriate levels of fiscal stewardship. For internal city projects, appropriate internal controls are already in place for both the collection of revenues and the expenditures of city funds. In addition, these controls are periodically reviewed and tested by internal city staff and external city auditors.

These same processes are not in place for capital projects that do not fall under city processes and procedures. Therefore, staff feels that appropriate controls will need to be agreed upon by any external entity receiving funds, if this ballot proposal goes forward and is approved by the voters. As proposed, the ballot language would require that an agreement be entered into and approved by the City Manager for any project that is not subject to city fiscal controls. Staff does not propose placing the procedures and process in the actual ballot language as it could be confusing and difficult to modify if things

would change in the future. Initial discussions indicate that this process is acceptable to any entity that would be in such a relationship.

Contingency
There are many unknowns that can occur when projects will be built over a period of time. Examples are: inflationary costs can rise unexpectedly and be greater than are estimated in the original cost projections, revenues can fall short of projections, and unexpected costs can occur that were unforeseen. The fire training center was a prime example of all three and the project was delayed for nearly a decade until a solution was found so the project could move forward. Therefore, to mitigate these issues a contingency is needed for these projects. The proposed $555,000 is approximately two percent of the total projects. Finance staff members have reviewed the projects and feel the costs and revenues have been projected conservatively so this level of contingency will be acceptable.

Operating Costs for Projects
The major cause of failed capital improvement programs across the United States is the lack of a funding stream adequate to pay for the new operating costs associated with new capital projects. There have been numerous stories across the United States of new schools and prisons that have been built, or where funds are in place to build them, that have not been completed or have not been able to be used because there were no resources to pay for the new operating costs. If the voters approve investing in new or expanded projects, then new operating dollars need to accompany the approval of the projects, if they cannot be absorbed within existing resources. At this time, it does not appear that the projects being considered will generate large increases in operating costs that cannot be absorbed in the operating budget. Staff will monitor costs as the projects develop and report back to council if operating costs escalate beyond expectations.

NEXT STEPS
If council wishes to pursue a PAYG ballot item for 2014, and pass the attached ordinance on first reading, a second reading will occur on August 5 and, if needed, a third reading would occur on August 19. All ballot items must be passed on final reading by council by the end of August to meet county deadlines. If a reading would be needed past August 19, it will need to be a special meeting and must meet all timeline requirements, which would be difficult to do.

ATTACHMENTS
A: Pay as You Go Ballot Ordinance
B: University Hill Projects
C: Civic Area Projects
D: Civic Area: Additional Information
E: Boulder Creek Area Projects
F: Public Art Projects
G: Chautauqua Project
H: Dairy Center for the Arts Project
I: Museum of Boulder Project

This Page Intentionally Left Blank

ORDINANCE NO.____

(Tax Increase for Capital Facilities)

AN ORDINANCE SUBMITTING TO THE ELECTORS OF THE CITY OF BOULDER AT THE SPECIAL MUNICIPAL COORDINATED ELECTION TO BE HELD ON TUESDAY, NOVEMBER 4, 2014, THE QUESTION OF AUTHORIZING THE CITY COUNCIL TO INCREASE THE SALES AND USE TAX BY UP TO 0.3 CENTS ON EVERY DOLLAR, EFFECTIVE FROM JANUARY 1, 2015 THROUGH DECEMBER 31, 2017 FOR THE PURPOSE OF FUNDING A VARIETY OF CAPITAL IMPROVEMENT PROJECTS; GIVING APPROVAL FOR THE COLLECTION, RETENTION AND EXPENDITURE OF THE FULL TAX PROCEEDS AND ANY RELATED EARNINGS, NOTWITHSTANDING ANY STATE REVENUE OR EXPENDITURE LIMITATION; AND SETTING FORTH THE EFFECTIVE DATE, BALLOT TITLE, AMENDMENTS TO SECTION 3-2-5, "RATE OF TAX," B.R.C. 1981 AND RELATED DETAILS.

WHEREAS the City Council finds that it is appropriate for voters to approve collection, retention, and expenditure of the full amount collected from the tax proposed by the ballot issue described below.

NOW, THEREFORE, BE IT ORDAINED BY THE CITY COUNCIL OF THE CITY OF BOULDER, COLORADO:

Section 1. A special municipal coordinated election will be held in the City of Boulder, county of Boulder and state of Colorado, on Tuesday, November 4, 2014, between the hours of 7 a.m. and 7 p.m.

Section 2. At that election, there shall be submitted to the electors of the City of Boulder entitled by law to vote the issue of a sales and use tax increase as described in the ballot issue title in this ordinance.

Section 3. The official ballot shall contain the following ballot title, which shall also be the designation and submission clause for the issue:

ISSUE NO. ___

TAX INCREASE FOR CAPITAL FACILITIES

SHALL CITY OF BOULDER TAXES BE INCREASED ($9,200,000 first full fiscal year increase) ANNUALLY BY INCREASING THE SALES AND USE TAX BY 0.3 CENTS FOR THE PERIOD OF JANUARY 1, 2015 TO DECEMBER 31, 2017;

AND IN CONNECTION THEREWITH,

SHALL ALL OF THE REVENUES COLLECTED USED TO FUND CAPITAL IMPROVEMENTS THAT WILL INCLUDE WITHOUT LIMITATION THE FOLLOWING:

- UP TO $ 8,700,000 FOR CAPITAL IMPROVEMENTS FOR THE BOULDER CIVIC AREA GENERALLY BOUNDED BY CANYON BLVD, ARAPAHOE AVE, 9TH STREET AND 13TH STREET,

- UP TO $ 3,270,000 FOR CAPITAL IMPROVEMENTS IN THE UNIVERSITY HILL COMMERCIAL DISTRICT AND HIGH DENSITY RESIDENTIAL AREAS INCLUDING LIGHTING, IRRIGATION AND TO IMPROVE PUBLIC STREETS,

- UP TO $ 5,125,000 FOR CAPITAL IMPROVEMENTS TO THE BOULDER CREEK PATH AND ITS ENVIRONS GENERALLY BETWEEN 3RD AND 17TH STREETS, INCLUDING LIGHTING AND PATH IMPROVEMENTS TO INCREASE SAFETY,

- UP TO $ 600,000 FOR PUBLIC ART AND TO PRESERVE OR RESTORE THE EXISTING ART COLLECTION,

- UP TO $ 3,850,000 TO IMPROVE THE DAIRY CENTER FOR THE ARTS PROPERTY,

- UP TO $ 1,500,000 FOR IMPROVEMENTS TO CHAUTAUQUA PARK AND ITS ENVIRONS FOR ACCESS, PEDESTRIAN, SAFETY, AND LIGHTING IMPROVEMENTS,

- UP TO $ 4,000,000 FOR CAPITAL IMPROVEMENTS AT THE MUSEUM OF BOULDER PROVIDED THAT THE MUSEUM OF BOULDER HAS FIRST RAISED AND DEDICATED AN EQUAL AMOUNT AND IN COMPLIANCE WITH TERMS, CONDITIONS, AND TIMING APPROVED BY THE CITY COUNCIL, AND

- ANY REMAINING FUNDS TO BE APPROPRIATED BY THE BOULDER CITY COUNCIL TO FUND CAPITAL IMPROVEMENT PROGRAM PROJECTS;

AND IN CONNECTION THEREWITH,

SHALL THE FULL PROCEEDS OF SUCH TAXES AT SUCH RATES AND ANY EARNINGS THEREON BE COLLECTED, RETAINED, AND SPENT, AS A VOTER-APPROVED REVENUE CHANGE WITHOUT LIMITATION OR CONDITION, AND WITHOUT LIMITING THE COLLECTION, RETENTION, OR SPENDING OF ANY OTHER REVENUES OR FUNDS BY THE CITY OF BOULDER UNDER ARTICLE X SECTION 20 OF THE COLORADO CONSTITUTION OR ANY OTHER LAW?

FOR THE ISSUE ____ AGAINST THE ISSUE ____

Section 4. If this ballot issue is approved by the voters, the City Council will adopt terms, conditions, and timing of payments prior to any appropriations to the Museum of Boulder that it finds are necessary to protect the public health, safety and welfare of the residents and visitors of the City of Boulder. In the event that the city, in its legislative or administrative capacity, determines that the Museum of Boulder cannot meet such terms or conditions in a reasonable or timely manner, such funds may be appropriated by the City Council for other capital improvement projects that are consistent with the ballot issue title.

Section 5. If this ballot issue is approved by the voters, the City Council further amends the Boulder Revised Code, effective on January 1, 2015, to read:

3-2-5. Rate of Tax.

(a) Except as specified in Subsection (b) of this section, the amount of the tax hereby levied is 3.~~56~~ 86 percent of the purchase price of tangible personal property or taxable services sold or purchased at retail.

(b) The amount of the tax hereby levied on food sold in or by a food service establishment shall be the amount levied in Subsection (a) of this section plus 0.15 percent of the purchase price of such food. Cover charges, admission, or entrance fees and mandatory service or service-related charges shall be included as part of the purchase price of such food. However, a mandatory service or service-related charge shall not be included as part of the purchase price of such food if the full amount of the charge is passed on to the employees of the food service establishment who have provided direct service to each person paying the charge, and if all federal and state income and other applicable taxes due on such charge have been withheld by the food service establishment and paid to the appropriate government.

(c) Of said amount:

(1) Parks and Recreation: 0.25 percent shall be deemed a parks and recreation tax, which tax shall expire at midnight on December 31, 2035 (Ord. No. 7862, approved by voters in 2012).

(2) Open Space and General: 0.33 percent shall be used for the purposes, during the time periods, and in the following amounts, as follows:

(A) An open space tax through midnight on December 31, 2018 (Ord. No. 5893, approved by voters in 1997).

(B) An open space tax for 0.22 percent, and a general sales and use tax for 0.11 percent from January 1, 2019 through midnight on December 31, 2034 (Ord. No. 7912, approved by voters in 2013).

(C) An open space tax for 0.10 percent, and a general sales and use tax for 0.23 percent from January 1, 2035 and continuing without expiration (Ord. No. 7912, approved by voters in 2013).

(3) Open Space: 0.15 percent shall be deemed an open space tax through midnight on December 31, 2019 (Ord. No. 7301, approved by voters in 2003).

(4) Transportation and General: 0.15 percent shall be used for the purposes, during the time periods, and in the following amounts, as follows:

(A) a transportation tax from January 1, 2014 through midnight on December 31, 2029 (Ord. Nos. 7913 and 7922, approved by voters in 2013).

(B) a general sales and use tax from January 1, 2030, which tax shall expire at midnight on December 31, 2039 (Ord. No. 7922, approved by voters in 2013).

(5) Capital improvement tax. 0.3 percent shall be deemed a capital improvement tax through midnight on December 31, 2017 (Ord. No. ***, approved by voters in 2014).

As each tax expires, the aggregate tax shall be reduced accordingly.

Section 6. If this ballot issue is approved by the voters, the City Council may adopt amendments to the Boulder Revised Code to further implement this sales and use tax increase and such other amendments to the Boulder Revised Code as may be necessary to implement the intent and purpose of this ordinance.

Section 7. If a majority of all the votes cast at the election on the issue submitted shall be for the issue, the issue shall be deemed to have passed and shall be effective upon passage, and it shall be lawful for the City Council to provide for the amendment of its tax code in accordance with the issue approved.

Section 8. The election shall be conducted under the provisions of the Colorado Constitution, the charter and ordinances of the City, the Boulder Revised Code, 1981, and this ordinance, and all contrary provisions of the statutes of the state of Colorado are hereby superseded.

Section 9. The officers of the City are authorized to take all action necessary or appropriate to effectuate the provisions of this ordinance and to contract with the county clerk to conduct the election for the City.

Section 10. If any section, paragraph, clause, or provision of this ordinance shall for any reason be held to be invalid or unenforceable, such decision shall not affect any of the remaining provisions of this ordinance.

Section 11. This ordinance is necessary to protect the public health, safety and welfare of the residents of the City, and covers matters of local concern.

Section 12. The City Council deems it appropriate that this ordinance be published by title only and orders that copies of this ordinance be made available in the office of the city clerk for public inspection and acquisition.

INTRODUCED, READ ON FIRST READING, AND ORDERED PUBLISHED BY TITLE ONLY this ___ day of _____, 2014.

_____
Mayor

Attest:

_____
City Clerk

READ ON SECOND READING, PASSED, ADOPTED, AND ORDERED PUBLISHED BY TITLE ONLY this _____ day of _____ , 2014.

_____
Mayor

Attest:

_____
City Clerk

University Hill Residential Area Lighting Improvements

The University Hill residential area is roughly bounded by Broadway on the east, Baseline Road on the south, 9th Street on the west, and Arapahoe Avenue on the north (please see the shaded areas on the associated figure). Safety has been identified as a concern on the Hill, especially for pedestrians at night. Pedestrians have reported that they feel extremely unsafe walking on the residential streets' sidewalks. Safety issues include a feeling of "darkness" and not being able to see people or objects while walking on the sidewalks. Currently, the Hill residential neighborhoods are lighted at the street intersections with one Xcel Energy High Pressure Sodium (HPS) orange hued street light on a 30' pole, with additional mid-block streetlights on the longer north/south blocks, and occasionally on the shorter east/west blocks. No specific pedestrian lighting is provided on the sidewalks outside of the Hill commercial area. The numerous trees in the area are mature, and block much of the existing lighting from reaching the sidewalks.

Based on direction from Council, staff has developed scopes and initial cost estimates to install high efficiency Light Emitting Diode (LED) pedestrian-scale lighting and roadway lighting on the Hill, along with a control system to monitor the lights and identify any outages or other problems, as well as to dim the lights to minimize energy use during the lowest activity periods. Interest was expressed by Council to consider Photovoltaic (solar-powered) lighting. It was investigated for use on the Hill, but it is not viable due to the heavy tree cover that limits direct sunlight exposure throughout the Hill residential area.

As part of the improvements, existing Xcel Energy street lights would be replaced with city-owned lights to provide consistent, full-spectrum "white" light. Providing improved lighting throughout the entire Hill residential area (both the shaded "highest density" and "lower density" areas) is estimated to cost in the range of $8-9 million. This was far outside of the potential budget given other needs. Therefore, two subsets of the entire Hill area have been broken out for Council consideration.

The first subset focuses lighting improvements on critical pedestrian corridors that were identified in a workshop held to obtain input from representatives of the CU administration, police department, and student government, the University Hill Neighborhood Association, and city staff members from the City Manager's Office, Police, Transportation, and the Downtown and University Hill Management District/Parking Services. These corridors (shown in yellow on the figure) link the areas of highest residential density on the Hill with the CU campus, the Hill commercial district, and downtown Boulder, which was identified as one of the most important pedestrian destinations for Hill residents. Installing continuous pedestrian-scale lighting on 14' poles at 70' to 90' spacing and improved intersection lighting with two fixtures on 30-35' poles on all of the identified critical corridors is estimated to cost $2 million.

The second subset provides pedestrian-scale lighting and improved roadway lighting on additional streets (shown in orange on the figure) in the highest density residential areas on the Hill (shaded in red on the figure). On these streets, continuous pedestrian-scale lighting on 14' poles would be provided at somewhat wider 90' to 110' spacing, along with a single 30-35' street light at each intersection. Providing improved lighting on the indicated highest density

streets in addition to the critical pedestrian corridors would serve the highest concentrations of Hill residents, at an additional estimated cost of $3.5 million.

The staff recommendation is to propose subset one for $2.0 million. This could serve as a good pilot program and will provide significant improvements and information if subset two was considered in a later ballot measure.

In addition to the one-time construction cost, it is important to note that there will be on-going Operation & Maintenance (O&M) costs associated with the additional lighting infrastructure. These continuing costs are estimated to equal approximately 2% of initial installation annually. Therefore, if the improved lighting on the critical pedestrian corridors was installed (subset one) at a cost of $2 million, the annual cost to operate the new lighting would be expected to be approximately $40,000 annually. If Council would propose the two subsets together would be $5.5 million and the operating cost would be estimated at $110,000 annually. It is felt that the new operating costs for subset one can be absorbed in the operating budget of the city and no new source of operating revenue will be needed.

Attachments:
B-1: University Hill Lighting Improvements

SPECIFIC RECOMMENDATIONS PER AREA

The University Hill lighting is divided into areas as depicted below:

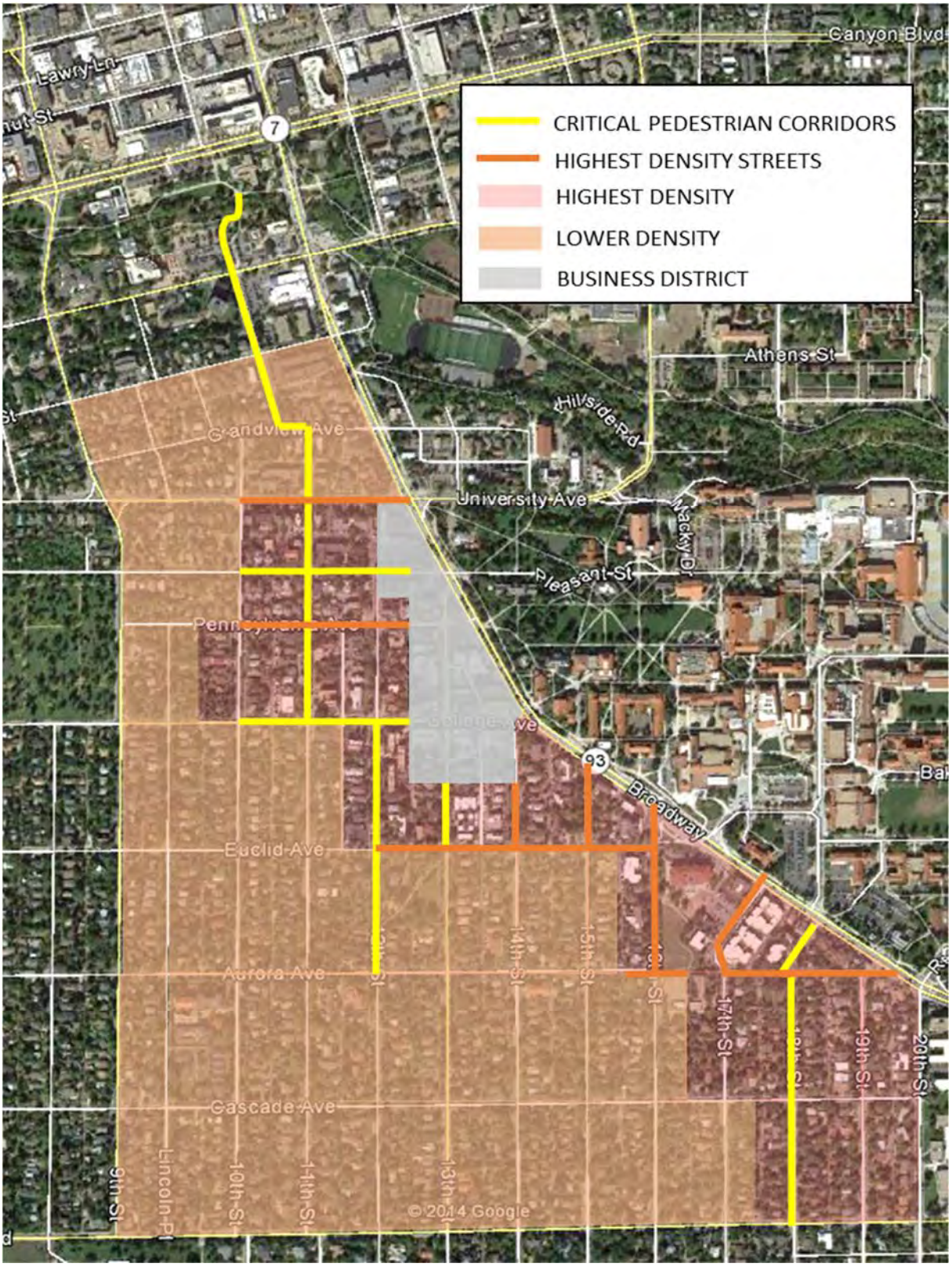

This Page Intentionally Left Blank

To: Members of City Council

From: Jane Brautigam, City Manager
David Driskell, Executive Director of Planning and Sustainability
Jeff Dillon, Superintendent Parks and Recreation
Paul Leef, Civic Area Project Manager
Jody Tableporter, Civic Area Project Manager

Date: June 17, 2014

Subject: Pay as you Go (PAYG) Submission: Civic Area

EXECUTIVE SUMMARY

Realizing Boulder's aspirations for a new "Heart of the City" requires comprehensive Civic Area site redevelopment and associated funding. This memo outlines a proposed approach to redevelop the Civic Area site and identifies three essential, integrated sets of capital projects that fulfill critical first steps towards achieving the adopted Civic Area vision: Creek at the Core, Connections and Access, and Community Spaces. The memo provides a high level cost assessment for these Phase 1 capital investments to help inform Council discussions regarding the potential application of PAYG funding to this important community priority.

The first section of this memo provides context regarding the Civic Area, and in particular, the integrated and phased approach to implementation of the adopted vision, including near-term site investments, activation/events, and long term capital projects (e.g., a year-round Farmer's Market, innovation center, multi-use event space, etc.).

I. CONTEXT: OVERVIEW OF THE CIVIC AREA IMPLEMENTATION PLAN APPROACH

On Sep 3, 2013, City Council approved the vision plan for the Boulder Civic Area, a document that encapsulated eighteen months of input, engagement and aspirations of over 5,000 Boulder citizens. The vision plan established the goals, guiding principles and core themes for the Civic Area--components that now inform the implementation plan and are reflected in three integrated strands of work (explained in greater detail in the following section):

1. Activation
2. Near-Term Site Redevelopment
3. Long-Term Capital Projects

Underlying this approach is the belief that the Civic Area project will be successful if the community develops a sense of ownership through participation in events and witnesses a positive and sustained change in the area's physical appearance and use – with near-term site improvements and activation helping to develop momentum, engender a sense that positive change is possible, and spurring potential interest and investment from external partners.

Following is an overview of the three work strands within the adopted Implementation Plan:

1. **Activation**

In the vision plan, the community identified the Civic Area as a place to "expand...cultural, arts, science, educational or entertainment amenities." However, Boulder citizens have become unaccustomed and/or disinclined to use the Civic Area as their public front yard or to view it as a place for culture and arts: a role played by urban parks in other cities. The implementation plan proposes to change perceptions by bringing new activities and people back to the Civic Area for summer/fall events that engage a broad range of audiences. Once people are back in the Civic Area, enjoying new activities, new events, they will swell the ranks of those who see the area's potential as the new heart of the city.

The strategy for summer/fall 2014 is to enhance partner events, particularly those that can create a splash, foster productive partnerships, pilot programs that relate to capital projects, and bring people to the Civic Area, and to market all area activities under a Civic Area umbrella. For example, for the successful Bot Joy mural event, the Civic Area events team added a 120-kid art class (with BMoCa) and established a Civic Area hashtag for social media.

In addition to Bot Joy, 2014 Civic Area events are being developed by the Civic Area events team (comprised of Civic Area project management and Parks and Rec staff) with the Dairy (Heritage Bike Parade), BMoCa (Game Changers) and the Library (Library Summer Festival). Parks and Recreation is leveraging existing partnerships to deliver Civic Area events associated with the Get Movin Challenge (bringing Yoga into the Park), Parks & Recreation Month and a volunteer-event occurring on Public Lands Day.

Also under consideration for 2014 or 2015 are events that will stretch the curation skills of the Civic Area team, including an Innovation Civic Area camp for teens, a Community Long Table and performance series. Although not technically an event, the Civic Area team is also engaging partners to help deliver a creek side interpretive exhibit.

2. Near-Term Site Redevelopment

The Near-Term Site Redevelopment is the subject of this PAYG memo; the context and proposed work plan (interventions, cost, phasing) are covered in detail in Section II, entitled "Near-Term Site Redevelopment/PAYG Submission."

3. Long-Term Capital Projects

The vision plan outlines a number of significant capital investments that would fundamentally shape the Civic Area's future, creating west and east "bookends" of facilities with a renovated and expanded park at the core. Examples of facility investments include a year-round market hall, a redeveloped senior center, a multi-use events space, and relocated municipal services. Extensive work is getting underway to take these key concepts to the next level of detailed planning, feasibility analysis and stakeholder discussions, with the aim of creating a short-list with suitable detail for consideration as part of a potential 2016 bond ordinance.

To complete this work, the Civic Area team will convene public/private partners to discuss potential Civic Area long-term capital investments in each of the following areas: the Arts, Local Foods, Event Space, Connections and Innovation/Services. The groups will convene bi-monthly for six months beginning this summer. To the extent that proposed projects are common to multiple working groups (e.g., innovation center, a subject for both Event Space and Service/Innovation) combined group meetings will be scheduled.

Appendix B contains additional detail on the focus of the individual work groups.

II. NEAR-TERM SITE REDEVELOPMENT/PAYG SUBMISSION

A. Context: Implement initial capital investments to redevelop the Civic Area in keeping with the adopted vision plan

The Civic Area today lacks identity as a unified public space. Both daily users and visitors experience it as a series of fragmented spaces (the library, bike path cut-through, Tea House, etc.) with very little sense of the area as a cohesive whole. As documented in the Civic Area visioning process and the resulting vision plan, the area falls short of its promise as a community destination and civic 'heart' with a special and coherent sense of place.

B. Integrated delivery plan

PAYG funding is requested to substantially initiate an integrated and comprehensive redevelopment of the Civic Area. As envisioned in the adopted plan, the redeveloped Civic Area will have a "linear 'green' along Boulder Creek...providing natural beauty, ecological function and flood safety as well as recreational, art, and cultural opportunities." The plan also outlines "a blend of indoor and outdoor facilities and spaces as an integral and important component of new programs for the Civic Area," with

"access and mobility… improved so people can get to, round, within and through the Civic Area better."

In accordance with the Civic Area Guiding Principles and best-practice design principles, the redevelopment will capitalize on the site's unique natural assets, provide enhanced outdoor venues for community gatherings, and address connectivity issues that now isolate the Civic Area from adjacent areas of the city. The focus is not on individual interventions (a piece of art or a new plaza) but on delivering substantial improvements across the site to create critical momentum toward reanimating Boulder's civic heart. The design work necessary to define in detail the proposed improvements will begin in Summer 2014. What is outlined below is a first-level draft based on the adopted vision plan and subsequent staff team discussions, with order of magnitude cost estimates. Undoubtedly, detailed design work and community input will shape the specifics and likely alter the budget specifics. The focus at this point is to ensure that the estimated amounts are appropriate for the scale of work and change envisioned, as informed by the community vision plan's principles and themes:

1. **The Creek at the Core**: The Creek is a symbol of what defines Boulder—outdoor space and nature—and it is located at the city's urban core. Many cities need to re-create this type of urban park feature; in Boulder, it is not only present but serves as the cohesive thread across the entire Civic Area site.

   As illustrated in the attached diagram (see items marked #1 in Appendix A) the individual interventions to deliver "the Creek at the Core" include: infrastructure to link the library and Creek; playgrounds, nature play areas and other improvements along both sides of the creek (between the library and municipal building and East of Broadway); and improvements in the area near the Gilbert White Memorial. The combined result is an enhanced and active natural environment at the core of the city that symbolizes Boulder's unique lifestyle--with areas designed to support play, recreation, socializing, contemplation and education.

2. **Community Spaces**: The adopted vision plan describes a Civic Area where people from all parts of the community gather, interact, and attend both planned and impromptu events (e.g., poetry readings, concerts, education, dance, etc.). Urban parks and civic spaces serve this vital role in numerous other cities.

   To meet community aspirations, improvements are needed to the Civic Area's infrastructure, and in particular to outdoor plazas and other community spaces to successfully host gatherings, performances and events. While new buildings and other indoor space improvements are addressed in the Long Term Capital Projects section, individual interventions proposed for the near-term include potential improvements to the Library Café/courtyard, the north library plaza, the north

municipal lawn, the sister cities plaza, and the areas/plazas adjacent to the Farmer's Market where power, lighting and other amenities are needed to support events.

Items marked #3 on the diagram in Appendix A highlight the proposed Community Space interventions. The intention is to invest in space improvements across the area to support multiple nodes of activity so that one area does not become better activated while another area becomes a place of neglect. Visitors will also stay longer and enjoy multiple activities that appeal to various members of a family or group. The plan also delivers the spaces needed for the growing indoor/outdoor programming aspirations of the library, BMoCA, and others.

3. **Connections and Access**: The Civic Area is not only internally disjointed, but it also suffers from a lack of physical connection to other parts of the city. One of the core tenets of the vision plan is to link the Civic Area more strongly with the rest of downtown, so that the two areas function as a unit to attract greater numbers of citizens and visitors; this will not occur without better connectivity.

   In advance of the envisioned redevelopment of Canyon Boulevard, targeted interventions can improve the connectivity between the Civic Area and the rest of downtown and create a better front-door(s) to the Civic Area. Proposed connections and access projects include: gateway enhancements, way-finding, signage and lighting improvements. The gateways are marked as #2 on the site diagram in Appendix A. Other improvements like lighting and signage are distributed across the Civic Area site.

In summary, the Creek at the Core, Community Spaces and Connections/Access improvements work together as three legs of a stool: each element is essential, interrelated and contribute to a working whole. For example, Boulder Creek is the signature feature which unites the entire Civic Area; if improved on its own, without better community spaces, activation and access, the desired momentum toward achieving the full Civic Area vision will unlikely be achieved.

C. Financial Implications

The estimated investment to deliver the integrated package of Creek at the Core, Community Spaces, Connections and Access is $8.7 million. This is the proposed submission for the PAYG funding.

Cost Break-Down: The estimate is comprised of the following costs, which were developed for each of the three theme areas of proposed improvements. Cost estimates were first developed for specific anticipated components within each theme area (e.g., connecting the Library plaza to the Creek area) and verified at that level of detail. The summary below describes the components included in each theme, but provides only the "rolled up" cost estimate. The key reason for this approach is that the design work needed

to determine the specific package of improvements (which would inform more accurate cost estimates at the detailed level) has yet to occur. Importantly, that process will include substantial community input.

The staff team would like to avoid a process of "picking and choosing" specific project components to arrive at a desired budget amount before the actual design work is completed. The team is confident that the proposed budget amount is at the level necessary to achieve the desired impact in terms of improvements and transformation of the Civic Area.

If council would like to reduce the proposed amounts, the design process can certainly design to a lower level of expenditure, understanding that it will also have a lower level of overall impact (either through reducing the scope, scale or interrelationship of specific improvements, or by eliminating proposed components altogether).

- **Boulder Creek at the Core: $4.425M**
  This includes improvements to areas north and south of the creek for nature play, education, recreation and social activity, including: infrastructure to link the library and Creek; playgrounds and nature play areas and other improvements along both sides of the creek (between the library and municipal building and East of Broadway); and improvements in the area adjacent to the Gilbert White Memorial. The most substantial investment (~2.5 million) will be in transforming the south side of the creek and the library into a large state-of-the-art nature play area that will serve as a significant attraction for families and create a strong synergy with improvements currently underway at the library. Cost estimates for this and related "Creek at the Core" work include items such as asphalt removal, landforming, equipment investments, irrigation systems, pathways, furniture, extensive landscaping, lighting and signage.

- **Community Spaces: $3.075M**
  This includes enhanced or redesigned public spaces and plazas to support a variety of events and programs, along with associated infrastructure investments. Specific spaces that will be improved as part of this investment are expected to include: the Library café/courtyard, the north library plaza, the north municipal lawn, the sister cities plaza and areas/plazas adjacent to the Farmer's Market. Cost estimates for this and related "Community Spaces" improvements include items such as surfacing replacement or refurbishment, seating, lighting, landscaping, irrigation, signage, art and providing access to electrical power to support food vending and performances.

- **Connectivity and Access: $1.2M**
  This includes improvements such as creating gateways (possibly via art) and related way-finding, pathway enhancements, signage and improved lighting across the site.

Cost Phasing: Due to the three year funding cycle associated with PAYG, the proposed improvements would be delivered in three phases of $2.9M each. The goal is to deliver elements of the Creek at the Core, Community Spaces and Connectivity/Access themes in each of the three delivery years. The exact scope and prioritization will be influenced by the site design undertaken in 2014 and associated public engagement.

Third Party Check: The cost estimates summarized in this memo were cross-checked using: (1) historical data from Parks and Recreation projects and (2) conceptual cost estimates provided by American Civil Contractors. The estimates were found to be consistent between sources and provided reassurance regarding the overall required financing.

Previous Civic Area Cost Estimates/Submissions: Various figures have been cited previously in regards to the Civic Area redevelopment:

- **$300,000 for "catalyst project:**" The 2014 CIP contained a request for a $300,000 "catalyst" project that, among other things, was intended to phase in the long-term vision. That CIP financing will be used to commission consultants to work with staff and the community to transform the adopted vision plan for the park areas and public spaces to a concrete site development plan that will truly catalyze changes to the Civic Area. The Civic Area team will be retaining consultant support in June/July 2014 and launching the participatory design process shortly thereafter.

- **$4.8 million Project Proposal**: The scope associated with the $4.8M civic area budget included in the February Council memo was a placeholder prepared by one department. The proposal was limited in focus to a playground area south of the creek and some general signage, lighting and security improvements. The $8.7M proposal represents a comprehensive view that reflects the aspirations in the vision plan, provides for a high degree of integration across the park, and was developed with partners, such as the Library, BMoCA and the Farmer's Market. The new proposal, for example, seeks to: link the library to the Creek, while redeveloping the areas in-between; develop community spaces and plazas; and enhance gateways and connections across Canyon Boulevard. Achieving this greater vision necessitated a proposal for a larger investment.

D. **Process**

1. **Hire consultant**. Using 2014 CIP funding, a consulting team will be hired to lead the detailed site development planning of the Civic Area. The consultant will engage with key stakeholders as well as the broader community to develop the exact site development phasing and construction for 2015-2017, that would use PAYG funding. Projects designated for 2015 will be designed in sufficient level of detail to be "shovel ready" as funding becomes available.

2. **Phased delivery**. As previously indicated, implementation of the overall site development plan can be phased over a three year period; each phase should ensure that elements of Creek at Core, Connections/Access and Community Places are delivered to achieve the integrated effect from site redevelopment, access and activation.

APPENDIX A: SITE DIAGRAM

BOULDER CIVIC AREA

Draft 05/19/14

1. Boulder Creek at the Core: Includes extensive, revitalized and redesigned play areas, nature, eduction, and attractive people space, linking with paths and library entrances

2. Enhanced Connection and Access: Includes possible improvements such as gateways, new signage, way-finding, crossings and art

3. Platforms for Community Activity and Arts: Includes enhanced or redesigned plaza and public spaces designed to support events and programs, farmers' market or others

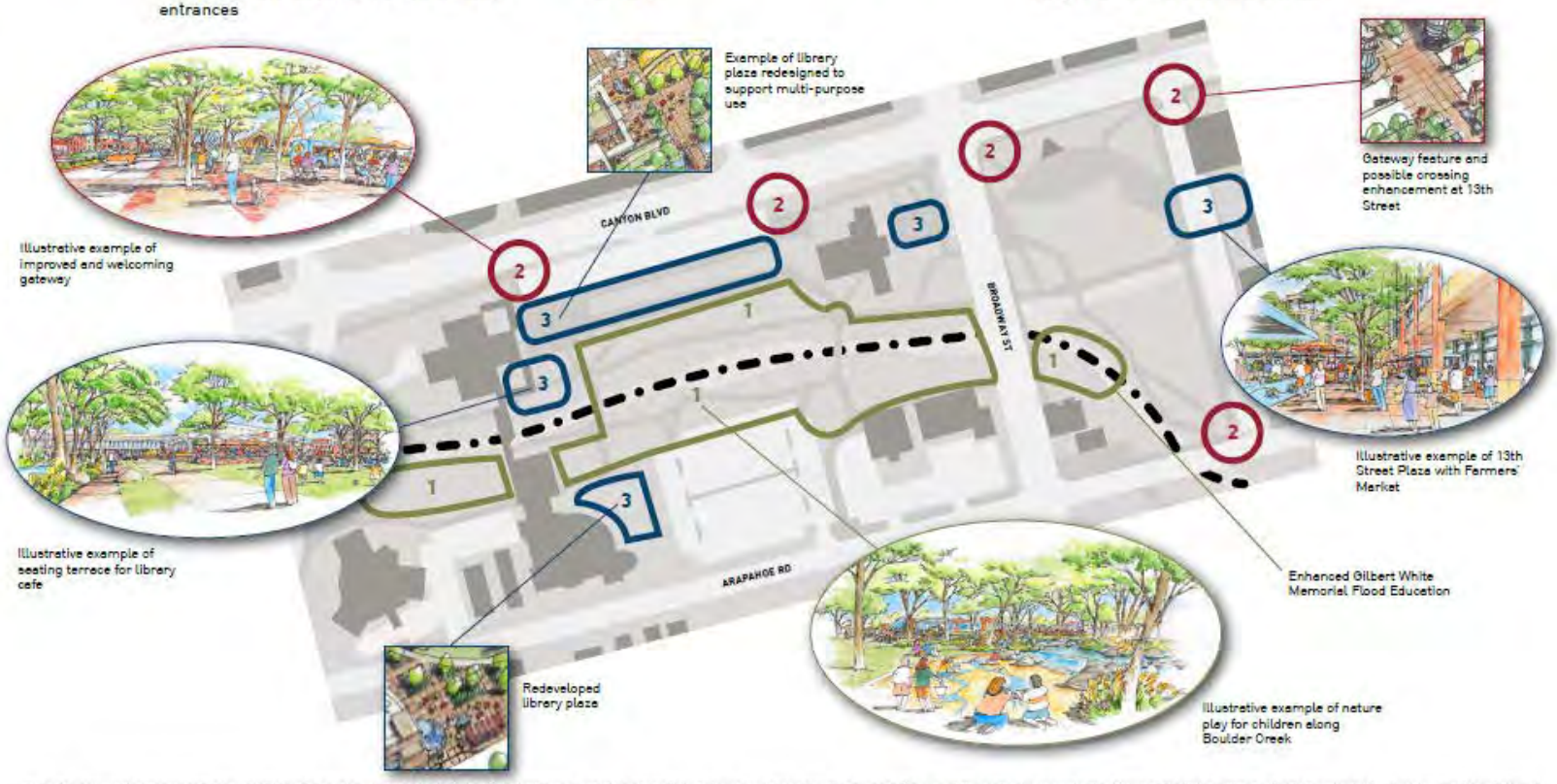

Note: The proposed improvements are not intended to function as stand-alone elements but rather as part of an integrated whole, whose impact together exceeds the sum of the parts. For example, the "Creek at the Core" will not activate the area by itself, and places for activity will not attract people without well designed connections and access.

APPENDIX B
Focus of Long Term Capital Project Work Groups

Food: The vision plan includes the aspiration to "expand the Farmer's Market as a vital component of the area" and "possibly expand it to year round (or extended season) local foods marketplace." Topic for this group will include options for the Civic Area to support the local foods sector, including the evaluation of the Farmer's Market expansion**.**

Art: The vision plan has a placeholder for more culture and arts and performance space at both the East End and West End. It also states the aspiration for the Civic Area to "expand....cultural, arts, science, educational or entertainment amenities that are otherwise lacking in the community." The Art work group will do double-duty, therefore, addressing not only art-needs but the broader aspirations related to science, education and entertainment. Civic Area capital projects that might be discussed, for example, range from a performance venue to a curated performance season.

Event Space: In the vision plan, providing "new community meeting space and gathering places" is seen as essential to delivering the Civic Heart of Boulder. Since event space means different things to different people, this group will focus on determining the need and feasibility of delivering additional meeting space for organizations (e.g., the Civic Use Pad) as well as space that can serve multiple purposes, e.g., meeting space plus demonstration kitchen, etc.

The city will also begin internal, cross-function discussions about:

Service and Innovation: In the vision plan, the Civic Area serves as the "primary location for city management and government, including functional and interactive places for the community to interface and conduct city business and be creative." The topics discussed in this work group, therefore, will include potential new municipal buildings and innovation center. Several studies will inform the Service and Innovation work group, including a new study that identifies options for the way the city works that inform the physical configuration of city offices and buildings. This effort will examine innovative new ways of improving and streamlining service delivery, improving efficiency and lowering operating costs. Additionally, the role of the City to facilitate "productive collisions" and enhance civic engagement through physical infrastructure is vitally important to strengthening creativity and long term community resilience.

Connections: The master plans seeks to: improve the Civic Area's pedestrian and bicycle amenities, address surface lots and parking needs, improve wayfinding to/from downtown, reduce barrier effects across major thoroughfares, and re-establish a "new urban design and streetscape character for Canyon Boulevard – to make it more of a 'boulevard' with attractive landscaping that is comfortable for pedestrians, bicycles, and accessible by transit." The Connections group will have a wide-ranging remit to address this list of interrelated objectives.

Two Points of Clarification

It is very likely that the discussion in different groups will overlap. For instance, the event space group may very well discuss combined meeting and innovation space, the later being the purview of the Future Government group. The Civic Area program manager, who will be attending all group meetings, may call for combined group meetings to address shared topics, thereby tapping into a wide range of knowledge.

The assembled groups will also discuss programming. While the groups are being assembled primarily to discuss capital projects, the capital projects only make sense if the programs/activities provided therein draw a crowd. Accordingly, we will be advising potential project sponsors to do a program pilot to prove the concept well before any capital commitments are made, e.g., asking advocates of a science museum to run a pilot program to prove the communities' interest and need.

APPENDIX C

Existing Conditions of Thematic Areas and Examples of Possible Improvements

"Creek at the Core" Theme: Existing Conditions and Possible Directions

"Connections" Theme: Existing Conditions vs. Illustrative Examples (Gateways)

"Community Spaces" Theme: Existing Conditions and Illustrative Examples

This Page Intentionally Left Blank

PAYG options for the Civic Area
Response to Questions from June 17 City Council Meeting

1. Completing the Site Transformation (funded by PAYGo) before finalizing the Long-Term Capital projects.

In general, the Site Transformation projects focus on the redesign of the Civic Area 'Park at the Core' outdoor spaces (e.g., nature play along Boulder Creek, outdoor platforms for community activity, and signage and gateways for better connectivity). The Park at the Core also connects and supports the buildings envisioned for the periphery of the site, i.e., the long-term capital projects that will form the "west bookend" in the Library area and the "east bookend" along 13th Street.

The interface between the Site Transformation (Park at the Core) and the Long-Term Capital projects (East and West Bookends) will be critical to the area's success. To ensure adequate attention to that interface and effective near-term investments, the selected Site Transformation consultants will be tasked with creating three options for options massing and use mix for the potential capital projects as part of the site redesign process, in a manner consistent with the adopted vision plan and informed by the 2014 input of the Long-Term Capital Project work groups. In areas where future building design and function are clear (e.g., the Library site), the design of the adjacent outdoor area will be finalized. In areas where building design and function may not be fully determined, flexibility in the design of the adjacent outdoor space will be retained.

The selected Site Transformation consultants will also analyze access and mobility considerations, service access, solar orientation and entry issues so that the near-term site improvements support longer term investments and overall site functionality and success.

2. Preliminary Work to Advance Civic Area Transportation Issues

The Transportation Division budgeted 2014 CIP funds to begin the Canyon Boulevard Complete Street study and is working closely with the Civic Area team to initiate and coordinate topographic site surveys. These surveys will provide base mapping for the upcoming design work related to Canyon Boulevard (the central piece of the connections study) and overall area site planning.

Transportation staff held a preliminary meeting with Colorado Department of Transportation Region 4 representatives to engage them in several initiatives, including Canyon Boulevard, Envision East Arapahoe, and the Regional Arterial Bus Rapid Transit planning for SH 119 and SH7. The Region 4 office has established a point person, Karen Schneiders, for the Canyon and Envision East Arapahoe processes. Staff intends to follow-up with more frequent dialogue to foster better understanding of the city's urban design and multimodal goals. In the 4th quarter of 2014, the process to hire a consulting team for the Canyon Boulevard Connections study will begin. The study is expected to

start in early 2015. Another $100,000 is proposed for the 2015 CIP to advance the Canyon Boulevard design work in anticipation of a potential 2016 bond package.

Boulder Creek Path Improvements

The Boulder Creek Path is a multi-use concrete path parallel to the Boulder Creek riparian corridor. It stretches seven miles from east Boulder to the foothills on the west end of town. Use along the Boulder Creek Path is highest through the heart of the downtown municipal campus and during summer months with an average daily count of between 1,500 to 2,000 bikes per day. It is estimated that foot traffic through this stretch of the Boulder Creek path is comparable to daily bike traffic. Path users have expressed concern for personal safety due to a lack of pedestrian scale lighting and high potential for conflict between pedestrians and bicyclists.

Based on direction from Council, an interdepartmental team comprised of Transportation, Utilities and Parks has developed a scope and initial cost estimates to improve pedestrian lighting and better separate users on foot from users on wheels along the Boulder Creek corridor from 17th Street to Eben G. Fine Park. The total project costs are estimated at $5.125 million. The projects are listed in priority order from the staff team for Council's consideration. A brief description of each item is detailed below. A list of potential improvements offers several options that may be packaged together or advanced separately as follows:

1	**Install Pedestrian-scale lighting**	
a.	17th Street to 13th Street continuous lighting	$310,000
b.	13th Street to 9th Street continuous lighting	$290,000
c.	9th Street to 6th Street non-continuous lighting	$120,000
d.	6th Street to Eben Fine Park non-continuous lighting	$200,000
e.	Eben Fine Park conflict area lighting	$120,000
	Lighting Sub-total	**$1,040,000**
2	**Complete physical path improvements (in priority order)**	
a.	Pedestrian path (6th to east of Eben Fine Park)	$275,000
b.	East entrance to Eben Fine Park	$100,000
c.	pedestrian path (17th to 13th)	$250,000
d.	6th and 9th streets underpass approaches	$60,000
e.	Interpretive signing	$150,000
f.	Crusher fine trail along north bank (9th to Eben Fine)	$50,000
	Pathway Improvement Subtotal	**$885,000**
3	**Install new box culvert at Arapahoe/13th for path users**	**$2,500,000**
4	**Eben Fine Park stream bank restoration**	**$700,000**
Boulder Creek Improvements Total		**$5,125,000**

Pedestrian lighting

The Boulder Creek Path is currently inconsistently lighted. There is continuous lighting on the University of Colorado (CU) property east of 17th Street. There are unlit segments between 17th Street and the municipal campus, and infrequent lighting west of the campus. There is a need to provide consistent lighting that is coordinated to the usage patterns to provide visibility and an increased sense of safety by all users.

It is recommended that city-owned, pedestrian-scale lighting (14' pole height) using high efficiency Light Emitting Diode (LED) light sources be installed throughout the Boulder Creek Path from 17th Street to Eben G. Fine Park. For continuous lighting in the highest use areas, pole spacing between 60' and 80' is proposed. In lower use areas, non-continuous lighting is proposed using pole spacing between 150' and 250'. At path conflict areas, LED lights on taller (18' to 20' height) poles are proposed. One of the known and anticipated concerns regarding added lighting includes impacts to wildlife habitat along riparian corridors. The importance of being sensitive to wildlife will be considered as a factor as the design proceeds. Being sensitive to adjacent property owners will also be important during final design. Lighting fixtures will be designed and located to minimize light trespass into the sensitive riparian areas next to the creek, and to minimize light trespass onto adjacent residential properties. A lighting control system will be provided to monitor the lights and identify any outages or other problems, as well as to dim the lights during late night low activity periods to minimize energy use during the lowest activity periods, which also is anticipated to lessen the impacts on wildlife. (Note: Photovoltaic (solar-powered) lighting was investigated for use on the Boulder Creek Path, but it is not viable due to the heavy tree cover that limits direct sunlight exposure.) Existing Xcel Energy lights along the corridor will be replaced with city-owned lights to provide consistent, full-spectrum "white" light along the corridor.

Lighting installation cost estimates for five distinct segments of the path are shown above. In addition to these one-time construction costs, it is important to note that there will be on-going Operation & Maintenance (O&M) costs associated with the additional lighting infrastructure. These continuing costs are estimated to equal approximately 2% of initial installation cost annually. Therefore, if the proposed lighting was installed in all five segments at a cost of $1,040,000, the annual cost to operate the new lighting is expected to be approximately $21,000. This new operating cost can be funded with current resources.

Separated paths

The existing Boulder Creek multi-use path between 17th Street to Eben Fine Park varies in width from eight to 14 feet wide. City and national guidance recommends a 10 foot minimum multi-use path width and a wider path when high bike or pedestrian use is anticipated.

To better accommodate the volume and types of users through the downtown stretch, it is recommended that the existing multi-use path be striped as a two-way bikeway with pavement markings to serve bicyclists and other wheeled traffic. A separate pedestrian path would be constructed adjacent to existing path to accommodate pedestrians. The list of physical path

improvements is prioritized by segment. The cost estimate to provide a continuous separate pedestrian facility along Boulder Creek from Eben G. Fine Park to 17th Street is approximately $885k, which includes approximately $150k for interpretive signing.

Arapahoe Avenue Underpass Improvements

An additional $2.5M improvement project is proposed at Arapahoe/13th Street to address sight distance, frequent path closures due to flooding, and personal safety. This project would construct a new box culvert to serve as a grade-separated pedestrian/bike underpass. The box culvert would be east of the existing bridge and the multi-use path currently under the bridge span would be removed. It is important to note that while this project is a higher priority than some other improvements, due to the significant process required it may take three to five years to complete. Also, staff prioritized this project lower due to the project cost relative to other Boulder Creek path components. Staff will continue to coordinate underpass design to include and/or not preclude potential future Civic Area improvements for possible flood mitigation, placemaking and connectivity.

Eben G. Fine Park - Bank Restoration

A stream bank restoration project in Eben G. Fine Park also is proposed to address multi-objective goals of the greenways program including erosion control, improved water quality, habitat and recreational access as well as enhanced park character. While this project is not exclusive to the path safety issues raised by Council, it would be a beneficial project to achieve multiple community goals in the Boulder Creek Greenway. This project is estimated to cost $700k.

This Page Intentionally Left Blank

Pay As You Go - Funding for Arts

Summary:
A "pay as you go" tax initiative is being discussed by City Council as a possibility to go before voters in the November 2014 election. Of those funds that would be raised, one option is that six hundred thousand dollars be assigned to the City of Boulder's Public Art program. These funds will be used to enhance the city's emerging public art program and fund key maintenance and restoration projects for the current public art collection. The following provides background regarding the specific projects.

Public Art

a) New public art projects.
A series of public art projects to be installed at sites across the city. The goal is to maximize the affect across different neighborhoods and districts. The strategy in identifying sites, coordinating selection, and mobilizing projects will be to enhance city construction projects, visual environment initiatives, or other city priorities. The funds will be used for all costs associated with the selection, approval, design, installation, communications, and events associated with the commissioning of these new public artworks.

b) Key maintenance projects for the existing public art collection.
Several public art projects in the city's inventory having been identified as in need of urgent repair, restoration, and conservation will be completed. These funds will be maximized by seeking matching dollars from the agencies that are responsible for each artwork identified for maintenance in this project.

This Page Intentionally Left Blank

CHAUTAUQUA PEDESTRIAN SAFETY, ACCESS AND LIGHTING IMPROVEMENTS

The Colorado Chautauqua is a unique public asset to the City of Boulder and provides a world-class destination for recreation, culture and historic distinction to the community and visitors. Through collaborative stewardship, city staff continues to work closely with the Colorado Chautauqua Association and members of the community to provide stewardship of this critical asset for the community and future generations. Through the current Pay-As-You-Go capital funding initiative, the community has an opportunity to experience capital improvements that will have a current and lasting impact on the visitor experience of Chautauqua.

Based on direction from Council, an interdepartmental team comprised of Public Works, Parks and Recreation and Open Space and Mountain Parks have developed a scope and initial cost estimates to enhance visitor experiences, improve public safety for access, lighting and amenities. The proposed Chautauqua Park historic site visitor experience improvements will include health and safety related items such as historic lighting designed to keep within cultural landscape design guidelines, access improvements such as safe pedestrian walkways and educational and interpretive signage. The estimated scope of this work is approximately $1.5 million depending on final design drawings and historic preservation reviews.

Three three key improvement projects include:

1. **Improved access and pedestrian safety along Baseline Road that may include new sidewalks, aligned parking and related safety enhancements totaling approximately $1M (see Attachment 1)**
2. **Pedestrian lighting along key access points for safety and accessibility from Baseline Road through the major park access walks to visitor facilities totaling approximately $250,000 (see Attachment 2).**
3. **Interpretive and wayfinding signage for historic interpretation of the site and to improve overall visitor experiences and understanding of the site character totaling approximately $250,000 (see attachment 3).**

Collaborative Stewardship

As noted above, the improvements will continue to inform the collaborative stewardship process **(see attachment 4)**. If these projects are selected for funding, a working group will hold several meetings to shape next steps on the broader stewardship and implementation of the improvements.

The overall purpose of the next phase of the collaborative stewardship is to build off of the previous work done to adopt guiding principles by putting these into action. The guiding principles are not intended to define the specific structures, processes, or agreements for making key decisions at Chautauqua. The next phase will focus on the implementation items that can put these guiding principles into action.

Leading up to and following council action on the projects, staff will begin developing a work plan for this next phase of the stewardship improvements.

ATTACHMENTS

Attachment G-1: Transportation Improvements Concept Design
Attachment G-2: Chautauqua Master Exterior Lighting Plan
Attachment G-3: Chautauqua Master Signage Plan
Attachment G-4: Collaborative Stewardship of the Colorado Chautauqua - Guiding Principles for Place Management and Fiscal Sustainability

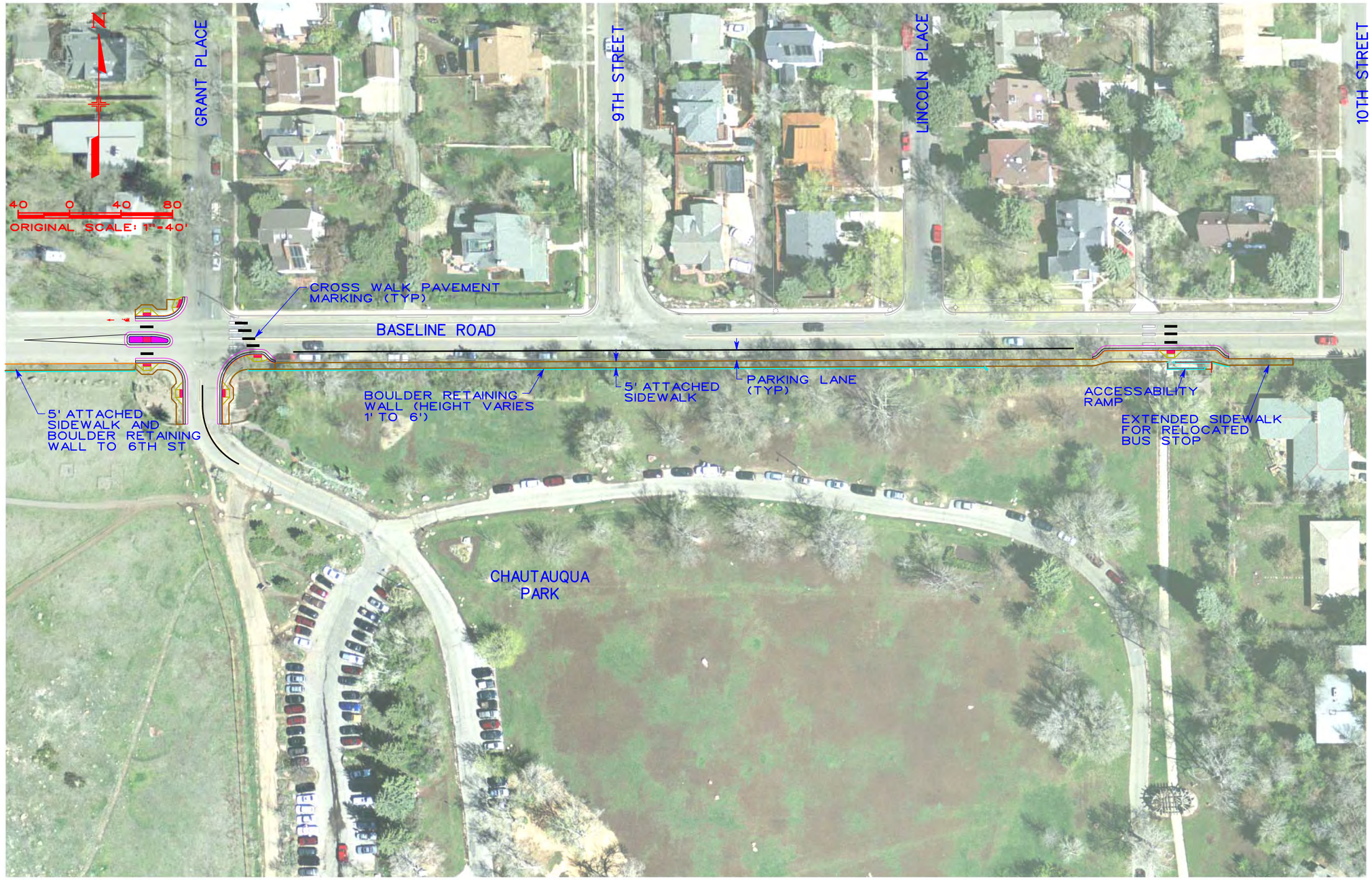

W:\13005000-COB_2014TIP\032-Baseline West-Chitaqua Park\Baseline West-Chautauqua Concept Design01.dgn

Print Date: 7/2/2014	Sheet Revisions			CITY OF BOULDER PUBLIC WORKS DEPARTMENT	CENTENNIAL ENGINEERING, INC. 5420 Ward Road, Suite 125 Arvada, CO 80002 (720) 279-7250	As Constructed	BASELINE RD. WEST-CHAUTAUQUA PARK PEDESTRIAN IMPROVEMENTS	Project No./Code
Drawing File Name: Baseline West-Chautauqua Concept Design01.dgn	Date:	Comments	Init.			No Revisions:		
Horiz. Scale: 1:80 Vert. Scale: As Noted						Revised:	Designer: / Structure Numbers	
Unit Information Unit Leader Initials						Void:	Detailer:	Sheet Number
							Sheet Subset: / Subset Sheets:	

CHAUTAUQUA
NATIONAL HISTORIC LANDMARK

Colorado Chautauqua National Historic Landmark Master Exterior Lighting Plan

January 20, 2012
Clanton & Associates

Table of Contents

Introduction 1
Design Philosophy 1
Image and Identity 1
Environmental Issues and Goals 2
Historic Preservation 2
Nighttime Visibility 3
Safety and Security 4
Nighttime Aesthetics 4
City of Boulder Lighting Ordinance 4
Prescriptive Designs and Strategies 5
Primary Roadways (Public) 6
Secondary Roadways (Residential) 7
Parking (Public) 8
Pedestrian Paths 9
Parks and Public Spaces 10
Building Facades 11
Monuments/Structures 16
Residential Exterior 17
Historic Globe Lighting 18
Control Strategies 19
Maps and Drawings 20
Appendix A 25
Appendix B 25

Introduction

On the Chautauqua campus, the exterior lighting helps to organize and define the nighttime visual environment. The placement, style, and performance of the lighting equipment determine much of the visual character of the environment after dark as well as the overall visibility for visitors. Changes in light levels should signify changes in public (more light) versus private (less light) zones of the park. During the day, the decorative elements of the lighting equipment will support the historic nature of the architecture and site and provide a unifying aesthetic element on the property. In addition to identifying where to provide light, the masterplan also designates areas that should remain dark. Every effort should be made to minimize light trespass and light pollution for the residences and adjacent open space.

The site lighting system should provide for driver and pedestrian visibility and way finding. Traveled pathways are lighted to provide guidance and good visibility while parking lots are lighted to provide security for both pedestrians and motorists. All of these design issues should be addressed with minimal energy use and effective maintenance in mind.

Design Philosophy

The exterior lighting masterplan for Chautauqua will provide light for safety and comfort while preserving the natural resources and atmosphere that make the park so unique.

The lighting program throughout will help retain a low level of natural ambient light suitable for the City of Boulder open space and mountain parks, save energy, and reduce waste to support Chautauqua green building goals. Low glare, well-placed lighting will provide a safe and comfortable nighttime environment. This masterplan recommends lighting strategies for areas where Chautauqua deems that safety and security is a concern, but does not propose lighting throughout the entire park. Specific control measures will ensure that lighting is not used when it is not needed.

The following design principles address the philosophy of site lighting throughout the Chautauqua National Historic Landmark:

- Image & Identity
- Environmentally Sensitive Lighting
- Historic Preservation
- Nighttime Visibility
- Safety and Security
- Nighttime Aesthetics

Image and Identity

The most important issue related to Chautauqua image and identity is not so much the selection of luminaire style, but rather the consistent application of styles, mounting heights, and light levels throughout the entire historic site. This masterplan establishes a clear hierarchy of lighting equipment and strategies to support the architecture and infrastructure of the park.

The luminaire styles should be influenced by the architectural styles of the park structures. However, many traditional lighting fixtures create as much glare as they do useful light and are not designed to minimize light trespass and light pollution. With some modifications, many traditional styles can be made to better control the light and still stay true to the traditional forms.

Light enhances architectural form and will support massing, hierarchy, and details of the architecture. Surfaces will be revealed with light, but views of the light fixtures will be minimized. Light fixtures should be integrated into the architecture where possible by mounting in eaves, under canopies, recesses, or within low walls. Light fixtures shall be inconspicuous unless there is an intentional decorative purpose. In general, the pedestrian level of the architectural form shall be the emphasis for appropriate exterior lighting. Only a few select facades should have light above the pedestrian level as a way to identify Chautauqua's very prominent and public features.

Environmental Issues and Goals

Environmentally sensitive lighting minimizes light pollution and light trespass, and applies only the right amount of light where and when it is needed. To limit light trespass and light pollution, the Lighting Masterplan complies with the City of Boulder Outdoor Lighting Standards, Section 9-9-16. All exterior area lighting will be shielded or fully shielded, aimed downward, and will utilize white light sources. Lighting levels will be minimized and lighting controls will ensure that lighting is turned off in some areas when it is not needed.

- *Dark Skies – Minimizing Light Pollution*

  Light pollution is uncontrolled light that travels into the atmosphere. This light represents wasted energy and creates "sky glow" that reduces visibility of stars in the night sky. Unshielded luminaires and excessively high light levels cause more light pollution than properly controlled light fixtures. The lighting within Chautauqua will be well shielded and designed to limit light levels to help maintain dark skies.

- *Friendly Neighbor – Limiting Light Trespass*

  Light trespass is often felt as "the light shining in my window". Usual culprits are unshielded floodlights, high wattage lamps, and other unshielded luminaires that are improperly located and poorly aimed. Light trespass will be avoided throughout Chautauqua. Light trespass can be minimized with careful equipment selection, proper location, and proper aiming and shielding.

- *Lighting only WHAT is necessary.*

  The determination of what to light is just as important as how to light. Some areas may be specifically designated as dark preserves. When an area does require lighting, the design should contain the light to that area as much as possible. For instance, light from parking areas should be adequately shielded to limit stray light onto adjacent areas or buildings. This same principle applies to street and trail lighting locations to minimize stray light onto adjacent cabins. By lighting only what is necessary, the light that is used will be more effective as compared to a design that lights all areas equally.

- *Lighting only WHEN it is necessary.*

  Energy use and light pollution can be reduced by turning off lights when they are not needed. Time control and motion sensors can be used to automatically turn lights off in areas that are used less at night yet still provide light when needed for late night use.

Historic Preservation

The Chautauqua Design Guidelines note that the development of the park spanned several decades. While lighting equipment such as street poles may have some historic character, the guidelines state that simplicity should be the most important consideration. This masterplan illustrates various period styles that could be used on the site. While the style may reflect a lantern-like aesthetic, the lighting technology will still address glare and uplight from the luminaire.

The lighting of building facades and structures at Chautauqua will focus on highlighting elements and features of the existing architecture. The designs should take care to hide the lighting equipment and not use any stylized fixtures that become an additional decorative element on the façade.

Nighttime Visibility

- *Lighting Quality, not Quantity.*

  Often, architectural exterior lighting is used principally for floodlighting instead of lighting quality, resulting in over-lit facades that create reflected light pollution or trespass. High quality accent lighting creates a composition of light and darkness on the architecture, using less light for greater effect. Streets and parking lots are also often over-lit when light level is used as the main lighting criteria without concern for the many other factors that affect visibility.

  Lighting quality involves many issues such as contrast, brightness adaptation, minimal glare and light source color. Good visibility is achieved by balancing brightness, lighting vertical surfaces, providing clear visual cues, and controlling glare. These strategies create a high quality visual environment using low light levels and minimal energy.

- *Brightness Adaptation.*

  Our eyes adjust to the brightest object in our field of view. This adjustment of our eyes is referred to as brightness adaptation. If an object is very bright, such as uncontrolled light from a floodlight, everything else in the immediate surrounding area appears relatively dark, making it harder to detect object details.

- *Reducing Glare.*

  Glare is usually caused by uncontrolled light emitted from unshielded luminaires. An example of this is unshielded wall pack fixtures or floodlights located on a building façade. These situations can be easily avoided with proper equipment selection, location, aiming, and shielding.

- *Better Visibility with White Light.*

  Light source color is another key to low light level visibility. Reaction time and color recognition under low light levels is superior with white light sources like metal halide, fluorescent, LED, and induction lamps. Using a warm colored light source (3000 K) will give a warm residential aesthetic while taking advantage of the white light visibility benefit.

- Lighting Vertical Surfaces.

  Illuminated surfaces improve the sense of brightness, safety, and security in an exterior environment. These surfaces allow pedestrians to see other people and objects in silhouette as well as accenting the character of the architecture and features.

- *Wayfinding.*

  Sign lighting provides an obvious complement to wayfinding features. However, lighting may also augment wayfinding in the form of indicators. For example bollards may alert motorists to the presence of pedestrians. Additionally, changes in brightness provide visual cues and orientation for pedestrians. Continuously lighted streets may identify a primary vehicle route while lower lighting levels suggest private or residential areas.

Safety and Security

Lighting to improve safety involves lighting hazards so that they can be seen with sufficient reaction time. Hazards may include vehicle intersections, crosswalks, stairs and ramps, and other site features that may be perceived as unsafe if not well identified at normal night time lighted conditions. The lighting system, along with other site design elements, must provide visual information to assist users in avoiding such things as a collision or loss of bearings.

Security can be described as the perception of safety. Lighting to improve security involves lighting potentially hazardous locations and situations. For example, an increase in reaction time can improve the ability to find refuge, or call for help. Lighting can also act as a deterrent by increasing the visibility in an area of concern. However, it should be noted that an increase in the number of people in an area will be a more effective deterrent against crime than an increase in light level.

Nighttime Aesthetics

The lighting system at night should reveal a hierarchy of brightness levels and provide subtle surface brightness throughout the public spaces. The style of lighting equipment will be less noticeable at night but an organized sequence of lighted areas and surfaces will provide wayfinding and a sense of security. For example, a street that provides access to cottages may have a relatively low light level when the surrounding cottage porches have lights. Similarly, the lighted façade of the Auditorium at the end of Morning Glory Drive provides a visible destination at the end of a public street.

City of Boulder Lighting Ordinance

The City of Boulder adopted a lighting ordinance in 2003. Its objective is to ensure safety and security, establish the use of white light sources (compact fluorescent, LED, and induction), prevent overlighting, and minimize light pollution. The ordinance sets limits on the following lighting characteristics:

Maximum allowable light levels (illuminance in footcandles)	Building Entries: 5 Parking Lots: 5 Pedestrian Walkways: 3
Maximum uniformity ratio	15:1
Maximum lumen rating for full cutoff luminaires	14,000
Maximum lumen rating for cutoff and semi cutoff luminaires	1,250
Maximum lumen rating for unshielded luminaires	900
Lighting controls	Recommended after close of business
Maximum pole height	20' adjacent to residential 25' otherwise
Flagpole lighting	(1) Uplight not to exceed 3,500 lumens

Additional and special use requirements can be found in the City of Boulder Land Use Code, Chapter 9-9, under Section 9-9-16, Lighting, Outdoor.

Prescriptive Designs and Strategies

The previously described concepts are applied to the typical components found throughout the Chautauqua park: roads, pedestrian spaces, structures, and residences. Roadways are made up of primary (public) routes that are frequently used by park visitors who are not necessarily staying there (open space parking, auditorium drop-off). Secondary (residential) routes serve all of the cottages but most likely are not frequented by the visiting public. Pedestrian spaces include both paths and open areas. Structures may be small focal points such as the arbor and signage or large, public facades such as the auditorium. Finally, the residential component includes all of the rented and privately owned cottages.

The map below color codes these components.

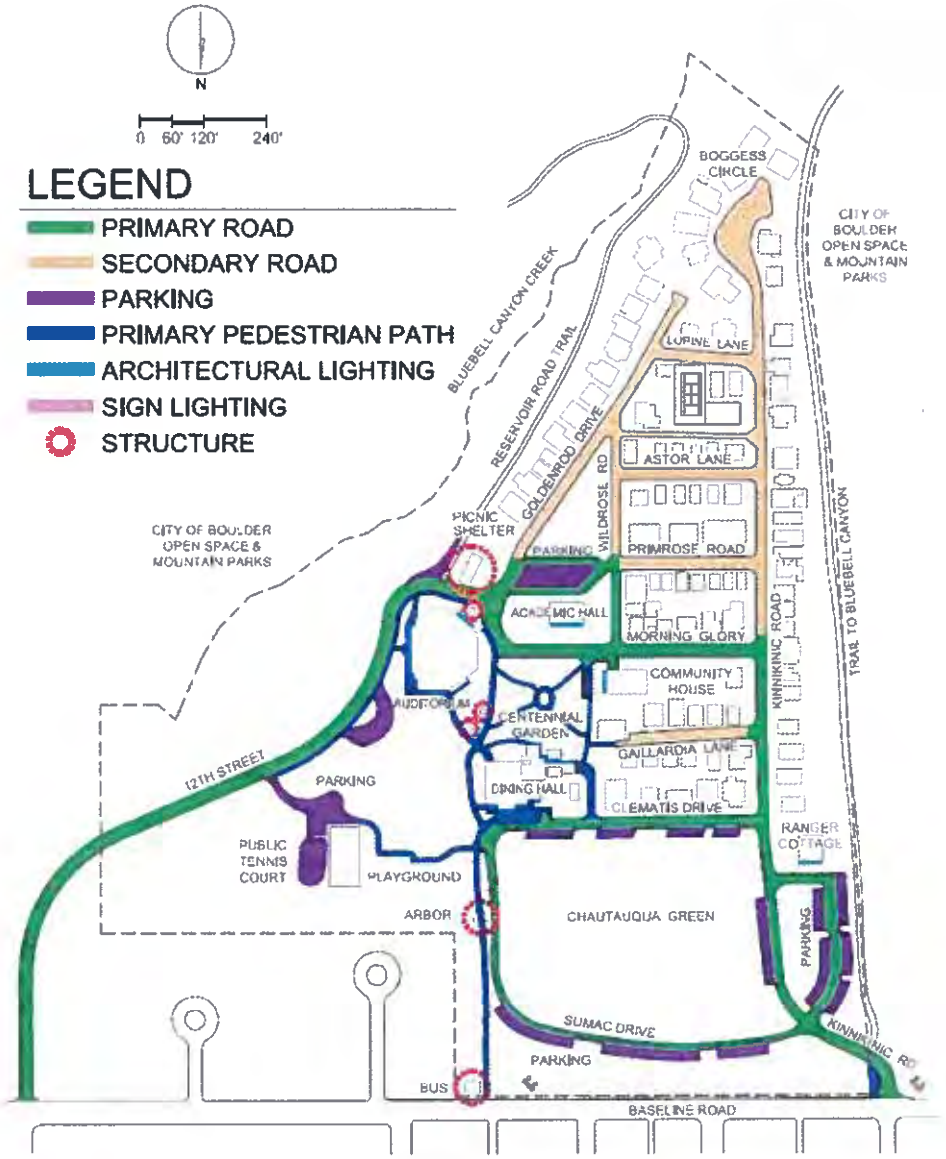

The following sections illustrate prescriptive designs and strategies for each of the components described on the map. Each section documents typical existing conditions, lighting equipment specifications, rules of thumb for location, spacing, and mounting heights, and appropriate sketches for mounting details.

Primary Roadways (Public)

EXISTING CONDITIONS:

Currently, cobrahead luminaires with high pressure sodium lamps are mounted on wood poles for the majority of the street lighting. The poles are not consistently located at intersections or on the same side of the road.

PROPOSED LIGHTING CONCEPT:

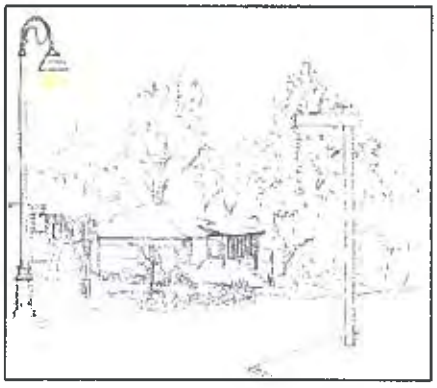

A traditional style, pole-mounted luminaire will provide lighting along the primary roads at intersections. Along stretches of primary roadway without intersections, luminaires should be spaced uniformly at curves or other decision points.

EXAMPLES

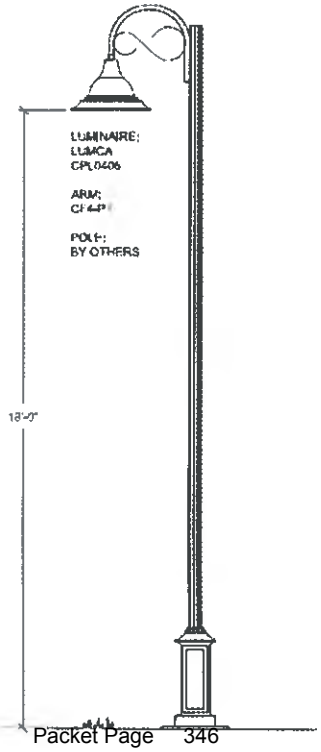

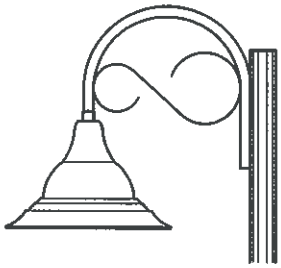

LUMINAIRE SPECIFICATIONS

Horizontal Distribution	Type IV or V
Lamp Type	Induction
Lumen Output	6000 lumens (85 watt)
Color Temperature	3000 K
Color Rendering Index	80+
Pole Height	18'
Pole Layout	Locate at intersections and mid-block
Controls:	Photocell ON, dim to 50% after curfew.

Secondary Roadways (Residential)

EXISTING CONDITIONS:

Currently, cobrahead luminaires with high pressure sodium lamps are mounted on wood poles for the majority of the secondary street lighting. Pole locations are not consistent. The remainder of the street lighting in residential streets comes from the porch lighting on the cabins.

PROPOSED LIGHTING CONCEPT:

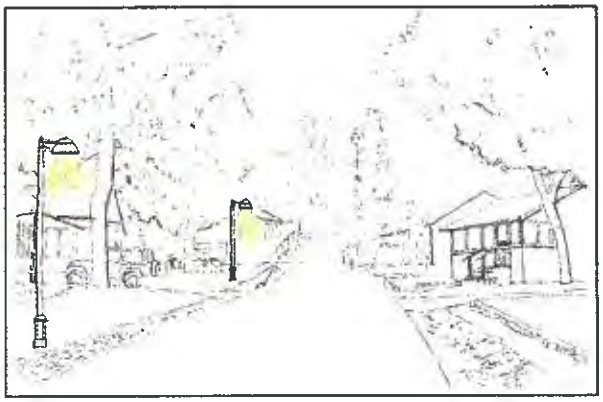

Smaller scale poles and luminaires should light the secondary streets. The cabin porch lanterns provide background brightness while the streetlights illuminate the roadway. Backlight from the luminaires should be controlled to prevent light trespass onto the cabin property.

EXAMPLES

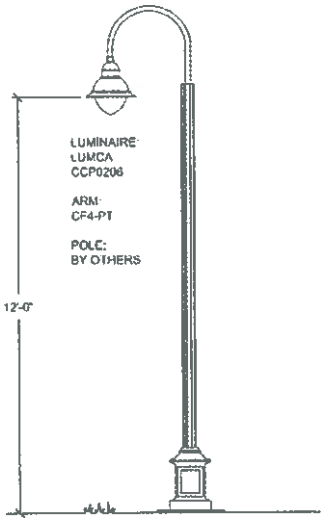

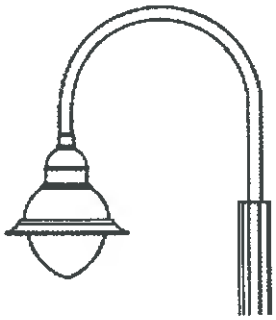

Note: Teardrop shaped globes introduce additional uplight and do not meet the City of Boulder Lighting Ordinance. Because the lamp is concealed fully within the opaque shroud, a variance may be possible.

LUMINAIRE SPECIFICATIONS

Horizontal Distribution	Type IV or V
Lamp Type	Induction
Lumen Output	3500 lumens (55 watt induction)
Color Temperature	3000 K
Color Rendering Index	80+
Pole Height	12' – 14'
Pole Layout	Locate at intersections.
Controls:	Photocell ON, dim to 50% after curfew.

Parking (Public)

EXISTING CONDITIONS:

Currently, cobrahead luminaires with high pressure sodium lamps provide the lighting for parking lots. No specific lighting is provided for public parking in areas such as along the Chautauqua Green.

PROPOSED LIGHTING CONCEPT

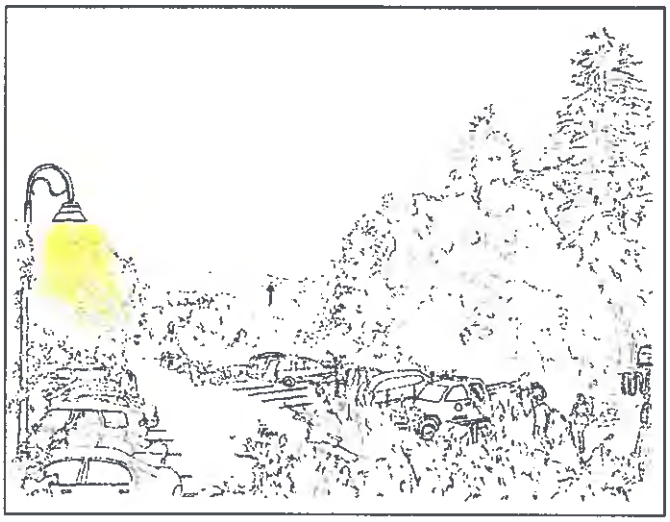

A traditional style, pole-mounted luminaire should provide lighting for the parking areas. The luminaire and pole configuration should match that of the adjacent roadway (primary or secondary).

EXAMPLES

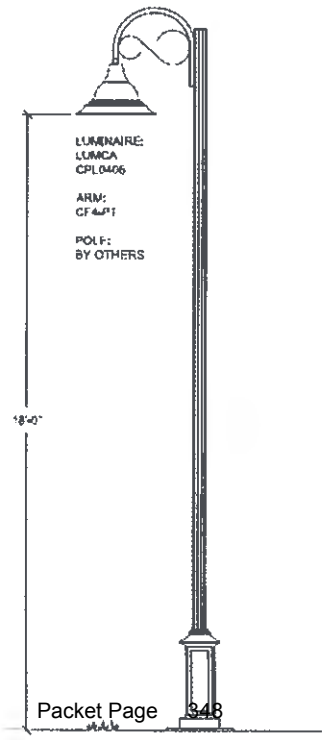

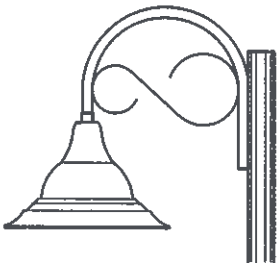

LUMINAIRE SPECIFICATIONS

Horizontal Distribution	Type IV or V
Lamp Type	Induction or CFL
Lumen Output	3500 lumens (55 watt induction)
Color Temperature	3000 K
Color Rendering Index	80+
Pole Height	12' – 14'
Pole Layout	Space at 4-6 times pole ht.
Controls:	Photocell ON, dim to 50% after curfew.

Pedestrian Paths

EXISTING CONDITIONS:

Currently, pedestrian scale lighting exists along some paths and in the Centennial Garden. However, it is typically provided by adjacent street lighting (cobrahead luminaires).

PROPOSED LIGHTING CONCEPT

For pedestrian paths that are frequently traveled at night and are not near lighted roadways, smaller scale lighting should be used. Matching existing acorn style lighting is recommended.

EXAMPLES

LUMINAIRE SPECIFICATIONS

Horizontal Distribution	Type IV or V
Lamp Type	CFL
Lumen Output	1200 lumens (18 watt)
Color Temperature	3000 K
Color Rendering Index	80+
Mounting Height	12'
Pole Layout	Locate poles at path intersections and traffic / pedestrian conflict areas.
Controls:	Photocell ON, dim to 50% after curfew.

Parks and Public Spaces

EXISTING CONDITIONS:

Centennial Garden, currently lit by acorn style lights, is an example of an illuminated public space. The park serves as a pedestrian corridor at night as well.

PROPOSED LIGHTING CONCEPT

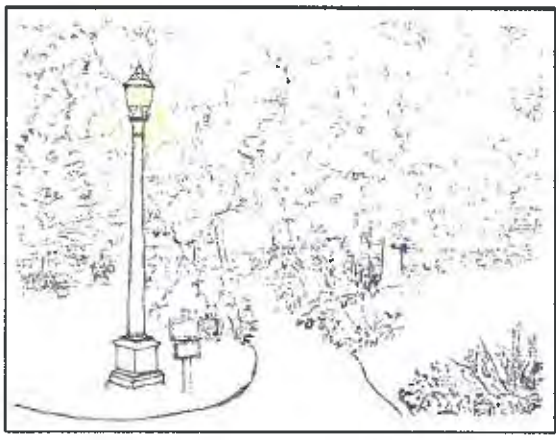

These areas will use the pedestrian luminaire to match the existing acorn style lighting.

EXAMPLE PRODUCTS

LUMINAIRE SPECIFICATIONS

Horizontal Distribution	Type IV or V
Lamp Type	Induction or CFL
Lumen Output	1200 lumens (18 watt CFL)
Color Temperature	3000 K
Color Rendering Index	80+
Pole Height	12'
Pole Layout	Locate at path intersections.
Controls:	Photocell ON, dim to 50% after curfew.

Building Facades

EXISTING CONDITIONS:

The existing Auditorium façade has no exterior lighting. While it would not be lit every night, its prominence to drivers coming to Boulder on Highway 36 makes it a good landmark and public icon during events.

PROPOSED LIGHTING CONCEPT:

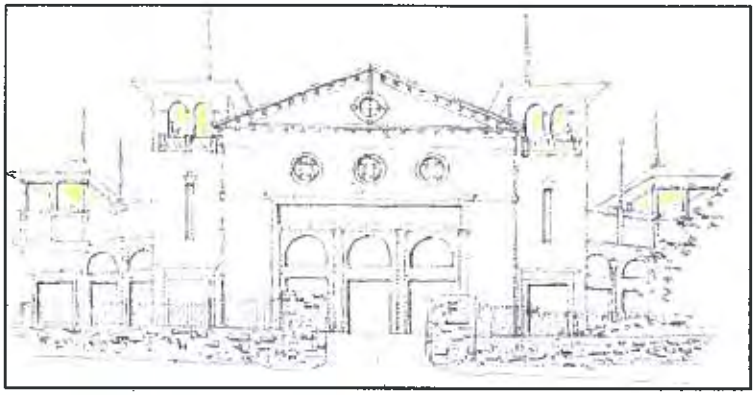

Like many buildings in the park, small architectural details (niches, cupolas, etc.) could be lit with minimal lighting equipment and energy use.

Lighting in niches should be mounted at the top, lighting downward. Uplighting of the cupolas must be contained within the roof overhangs to reduce light escaping into the night sky.

EXAMPLES

LUMINAIRE SPECIFICATIONS

Distribution	20°-40° beam spread
Lamp Type	Linear LED
Lumen Output	400 – 900 lumens max
Color Temperature	3000 K
Color Rendering Index	80+
Controls:	Provide for the changing of overall light levels by switching different luminaire types separately. Controls should provide for a minimum of two "scenes" such as open/closed, event/no event, etc.

Auditorium – Non-Event Evenings

Auditorium – Event Schedule

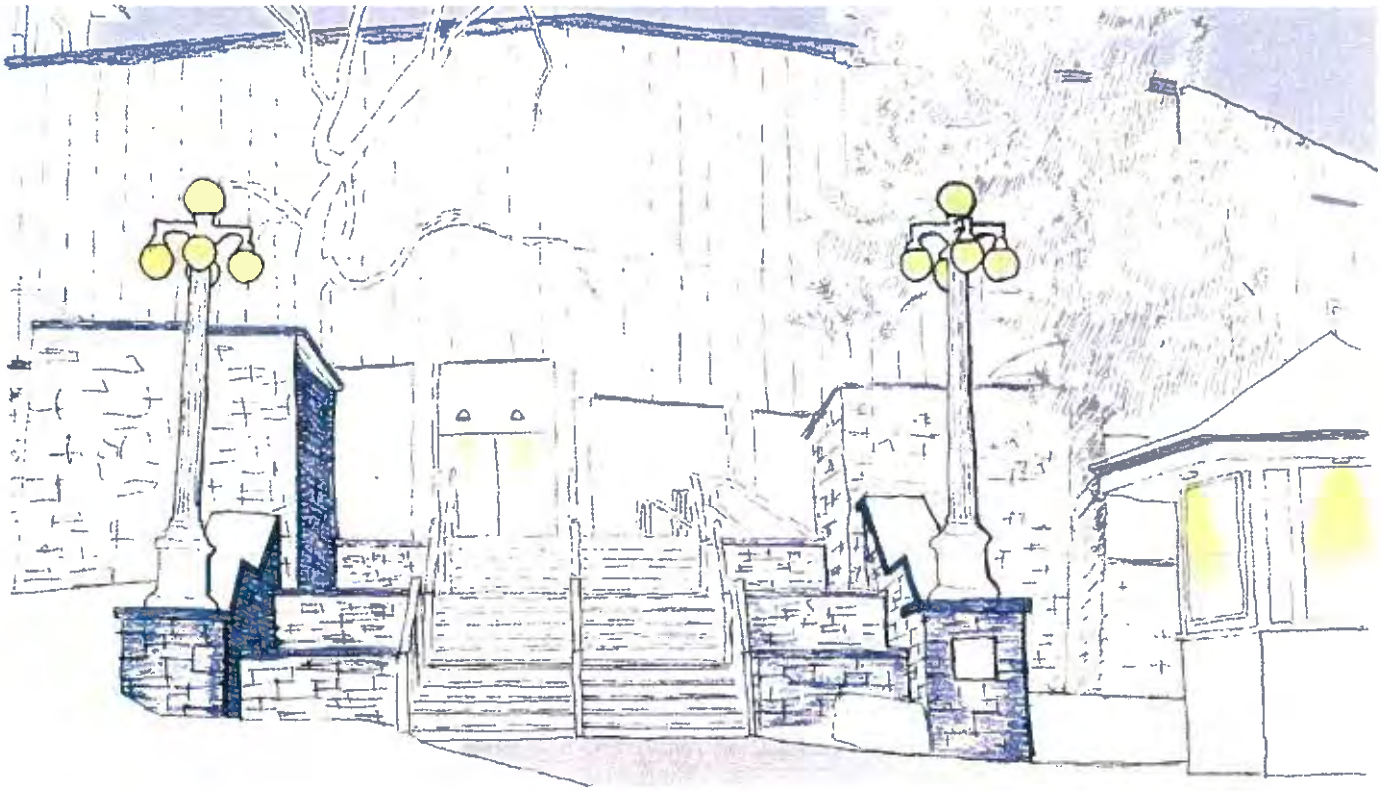

Auditorium –Event Evenings

Auditorium –Event Evenings

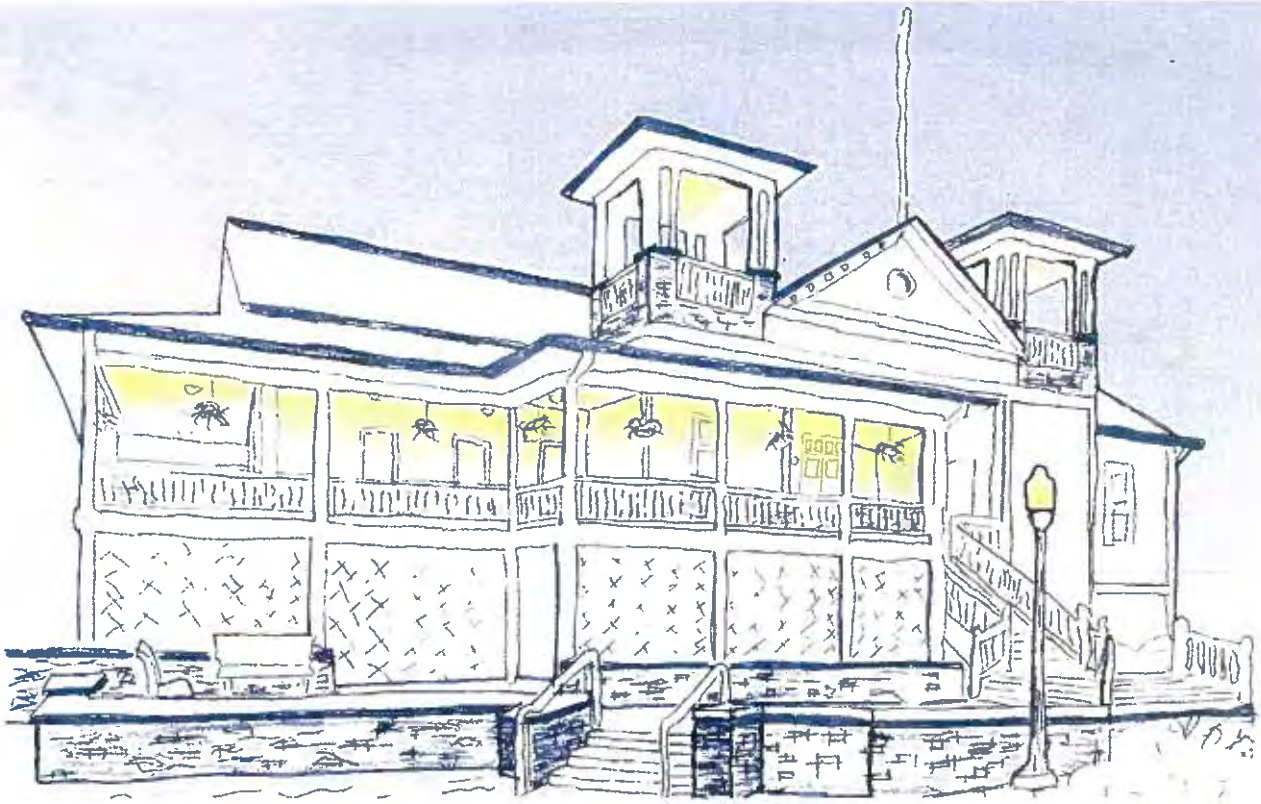

Dining Hall – Open

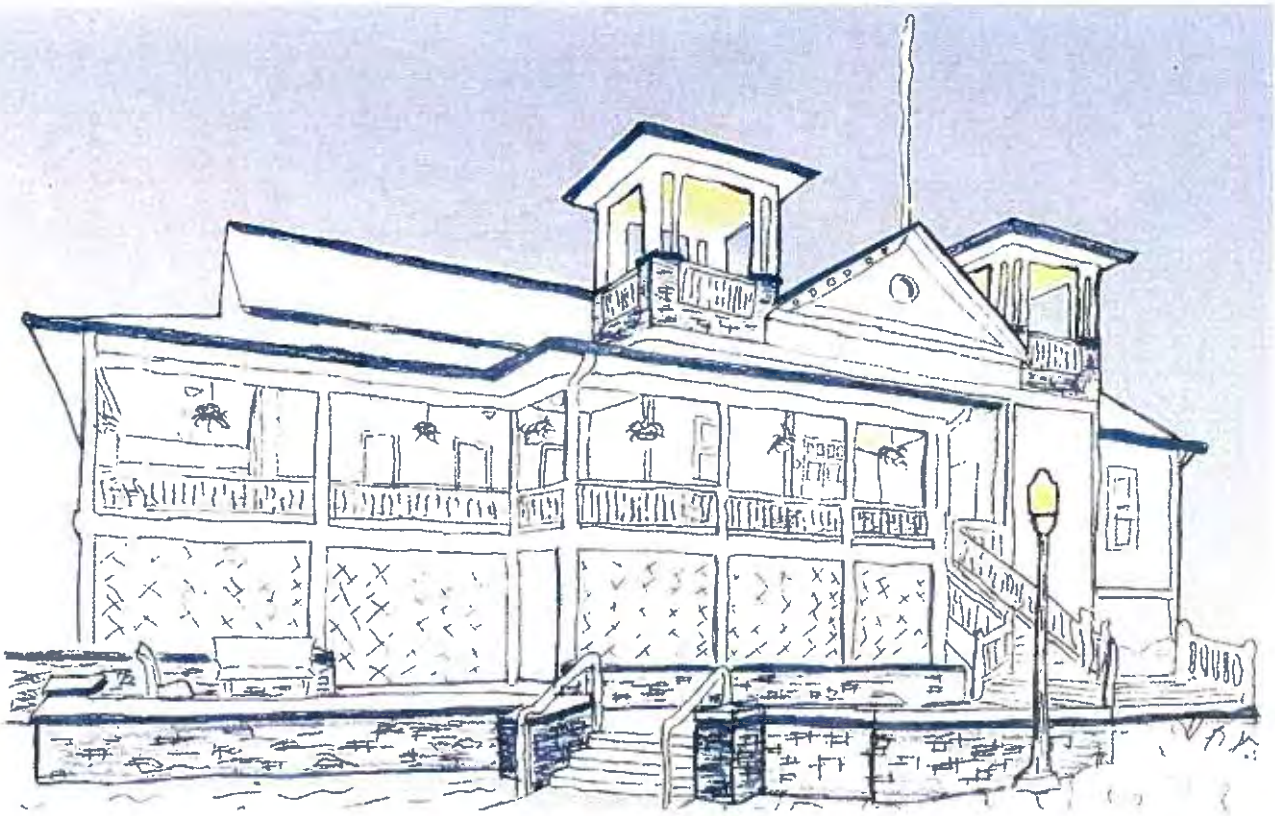

Dining Hall – Closed

Academic Hall

Community House

Monuments/Structures

EXISTING CONDITIONS:

Currently, very few structures are lighted in the Park. However, structures such as the Arbor receive a significant amount of pedestrian traffic at night and warrant additional illumination.

PROPOSED LIGHTING CONCEPT:

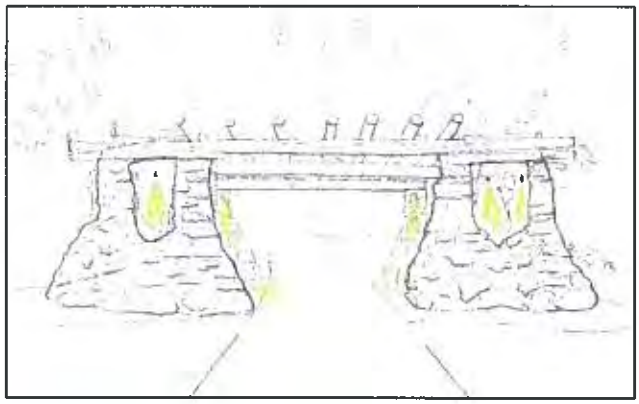

Structure lighting should remain subtle, downward directed, and controllable so that it is only on during events or certain times of the evening.

In this lighting concept for the arbor, only the inside surfaces of the stone columns are illuminated. The reflected light will produce a glow inside the structure, inviting pedestrians to pass through on their way to the Auditorium or to Baseline Road.

EXAMPLES:

LUMINAIRE SPECIFICATIONS:

Distribution	Flood or Narrow Flood
Lamp Type	LED
Lumen Output	100 – 400 lumens
Color Temperature	3000 K
Color Rendering Index	80+
Controls:	Provide for the changing of overall light levels by switching different luminaire types separately. Controls should provide for a minimum of two "scenes" such as open/closed, event/no event, etc.

Residential Exterior

EXISTING CONDITIONS:

Currently, exterior lighting on and around the cabins is kept to a minimum. Most cabins have a lantern style porch light beside or above the door.

PROPOSED LIGHTING CONCEPT

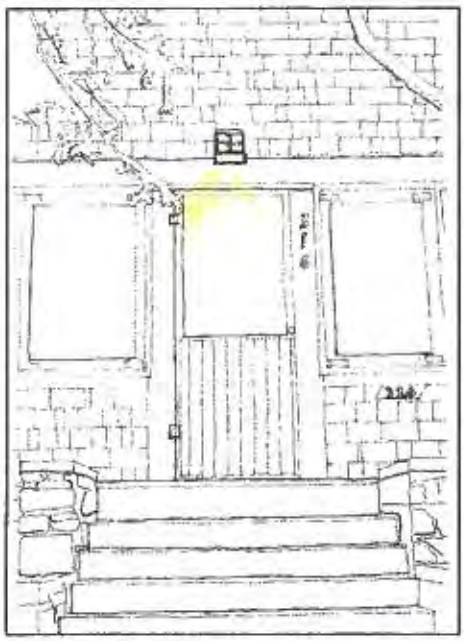

The lamps in the porch lights should be changed to compact fluorescent or LED and controlled with an automatic timer. The location of lights and building number should be paired in such a way that the number is clearly illuminated for late night arrivals and easy address identification.

For Private cottage owners:

CCA is implementing this porch lighting plan on all CCA owned cottages and CCA may offer assistance to private cottage owners in retrofitting existing switches with timers to maintain consistency throughout the park by providing a source for the timers being used and contact information for the CCA electrician. The timers being used are completely programmable and can be set to turn porch lights on from dusk until dawn.

EXAMPLES

Lamp Type	Compact Fluorescent or LED
Lumen Output	400 – 900 lumens (max)
Color Temperature	3000 K
Color Rendering Index	80+
Mounting Height	Over door.
Controls:	Photocell ON / Timer OFF.

Historic Globe Lighting

EXISTING CONDITIONS:

The decorative globe fixtures located at the auditorium are dated from the early 1900's and are a character defining feature of the district.

These luminaires have been relamped with low wattage compact fluorescent lamps. This approach keeps the historic fixture while reducing glare, energy consumption, and light pollution.

LAMP RETROFITS

Lamp Type	Compact Fluorescent
Lumen Output	900 lumens (max)
Color Temperature	3000 K
Color Rendering Index	80+
Controls:	Provide automatic time switch.

Control Strategies

Exterior lighting control for the campus uses several different strategies:

- Automatic photocontrol: turns the light ON at sunset and OFF at dawn.
- Automatic photocontrol with time switch: turns light ON at sunset and OFF at a set time of night.
- Automatic photocontrol with time switch and manual override: turns the light ON at sunset and OFF at a set time; can be overridden to stay ON later and then reset to the regular schedule the next day.
- Partial night photocontrol: turns the light ON at sunset, dims the light to 50% at 10pm (or other selected time) and then OFF at dawn.

The control schedule for all of the lighting components is listed in the following table. The lighting varies by time of year (standard season and event nights) and by time of day (dusk to curfew and curfew to dawn).

	Standard Seasonal Schedule		Event Schedule		Control Type
Exterior Lighting	**Dusk to 10 PM**	**10 PM to Dawn**	**Dusk to Post Event Time**	**Post Event Time to Dawn**	
Primary Lighting	ON	ON at HALF POWER	ON	ON at HALF POWER	Auto
Secondary Lighting	ON	ON at HALF POWER	ON	ON at HALF POWER	Auto
Pedestrian Lighting	ON	ON at HALF POWER	ON	ON at HALF POWER	Auto
Architectural Lighting					
Auditorium	Tower Lighting ON	OFF	ALL ON	OFF	Auto/Manual for Event
Community House	ALL ON	OFF	ALL ON	OFF	Auto/Manual for Event
Dining Hall	Tower Lighting ON	OFF	ALL ON	OFF	Auto/Manual for Event
Academic Hall	ALL ON	Entry Lighting ON	ALL ON	Entry Lighting ON	Auto/Manual for Event
Ranger Cottage	ALL ON	OFF	ALL ON	OFF	Auto
Structure Lighting					
Kiosks	OFF	OFF	ON	OFF	Auto/Manual for Event
Arbor	ON	OFF	ON	OFF	Auto/Manual for Event
Trolley Stop	ON	OFF	ON	OFF	Auto/Manual for Event
Picnic Shelter	OFF	OFF	ON	OFF	Auto/Manual for Event
Sign Lighting					
Baseline Entry	ON	ON	ON	ON	Auto
Trolley Stop	ON	OFF	ON	OFF	Auto/Manual for Event

Maps and Drawings

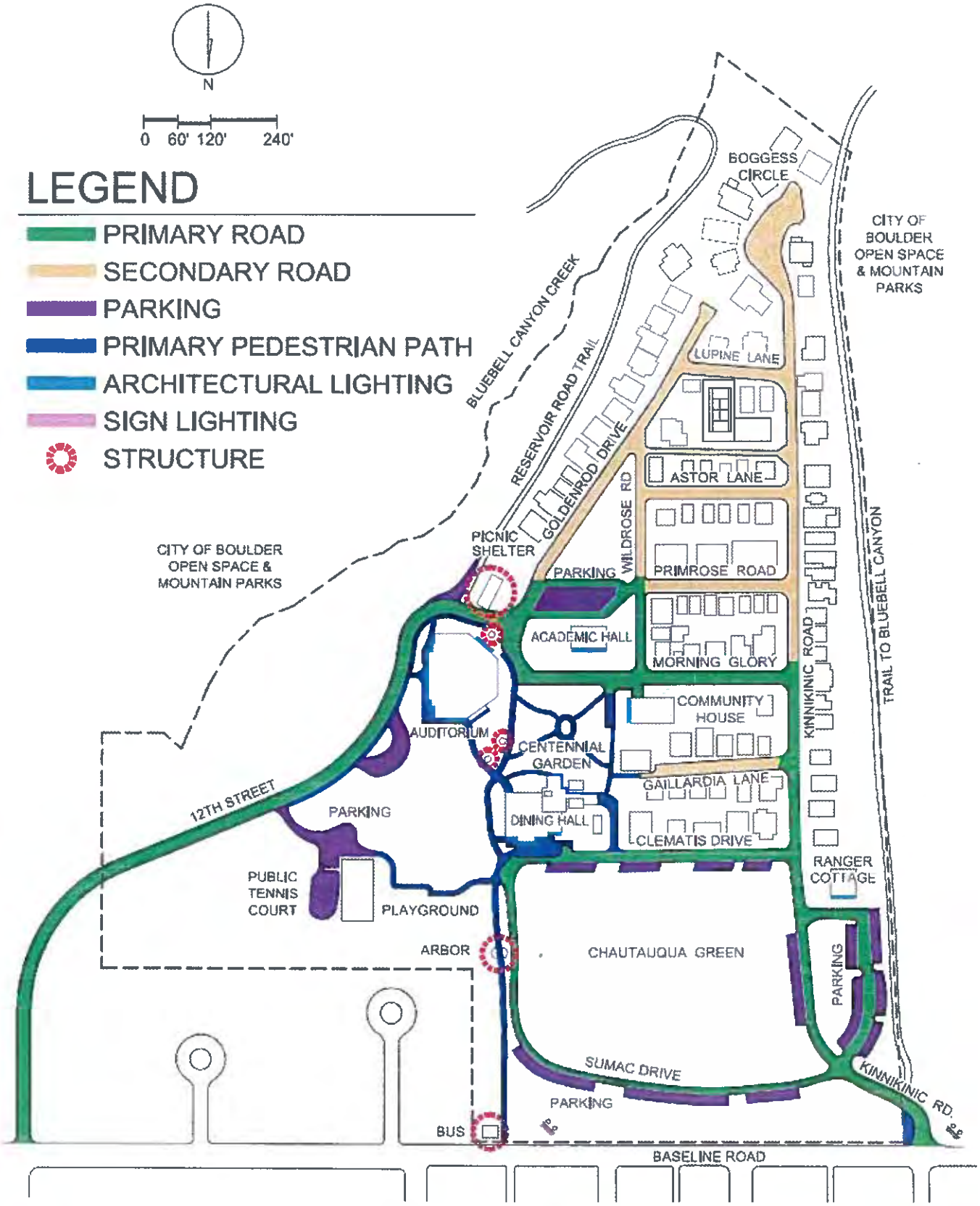

AREA CLASSIFICATIONS

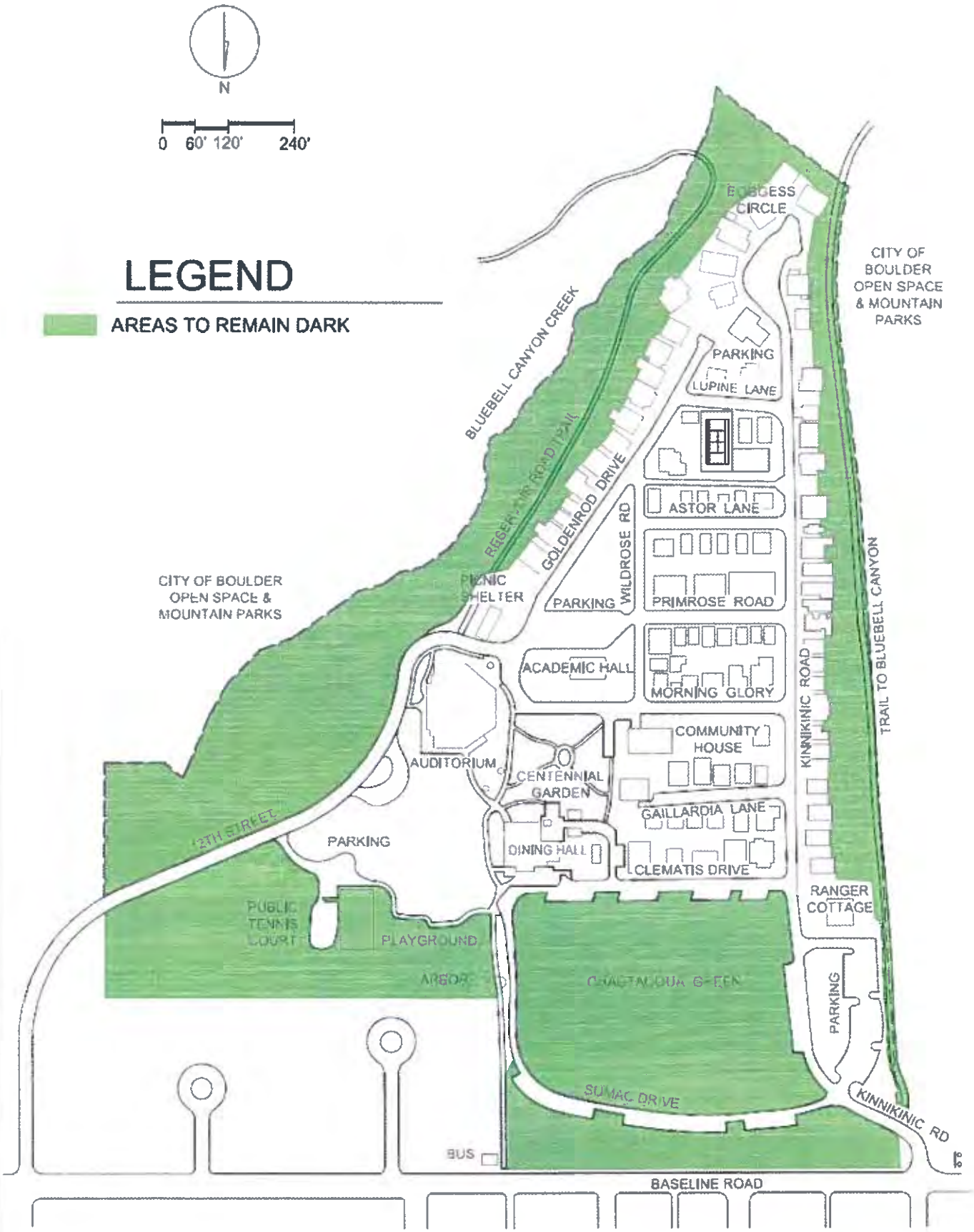
N
0 60' 120' 240'
LEGEND
AREAS TO REMAIN DARK
EGRESS CIRCLE
CITY OF BOULDER OPEN SPACE & MOUNTAIN PARKS
BLUEBELL CANYON CREEK
PARKING
LUPINE LANE
REGENT PRO DI TRAIL
GOLDENROD DRIVE
ASTOR LANE
WILDROSE RD
PRIMROSE ROAD
CITY OF BOULDER OPEN SPACE & MOUNTAIN PARKS
PICNIC SHELTER
PARKING
ACADEMIC HALL
MORNING GLORY
TRAIL TO BLUEBELL CANYON
KINNIKINIC ROAD
COMMUNITY HOUSE
AUDITORIUM
CENTENNIAL GARDEN
GAILLARDIA LANE
12TH STREET
PARKING
DINING HALL
CLEMATIS DRIVE
RANGER COTTAGE
PUBLIC TENNIS COURT
PLAYGROUND
ARBOR
CHAUTAUQUA GREEN
PARKING
SUMAC DRIVE
KINNIKINIC RD
BUS
BASELINE ROAD

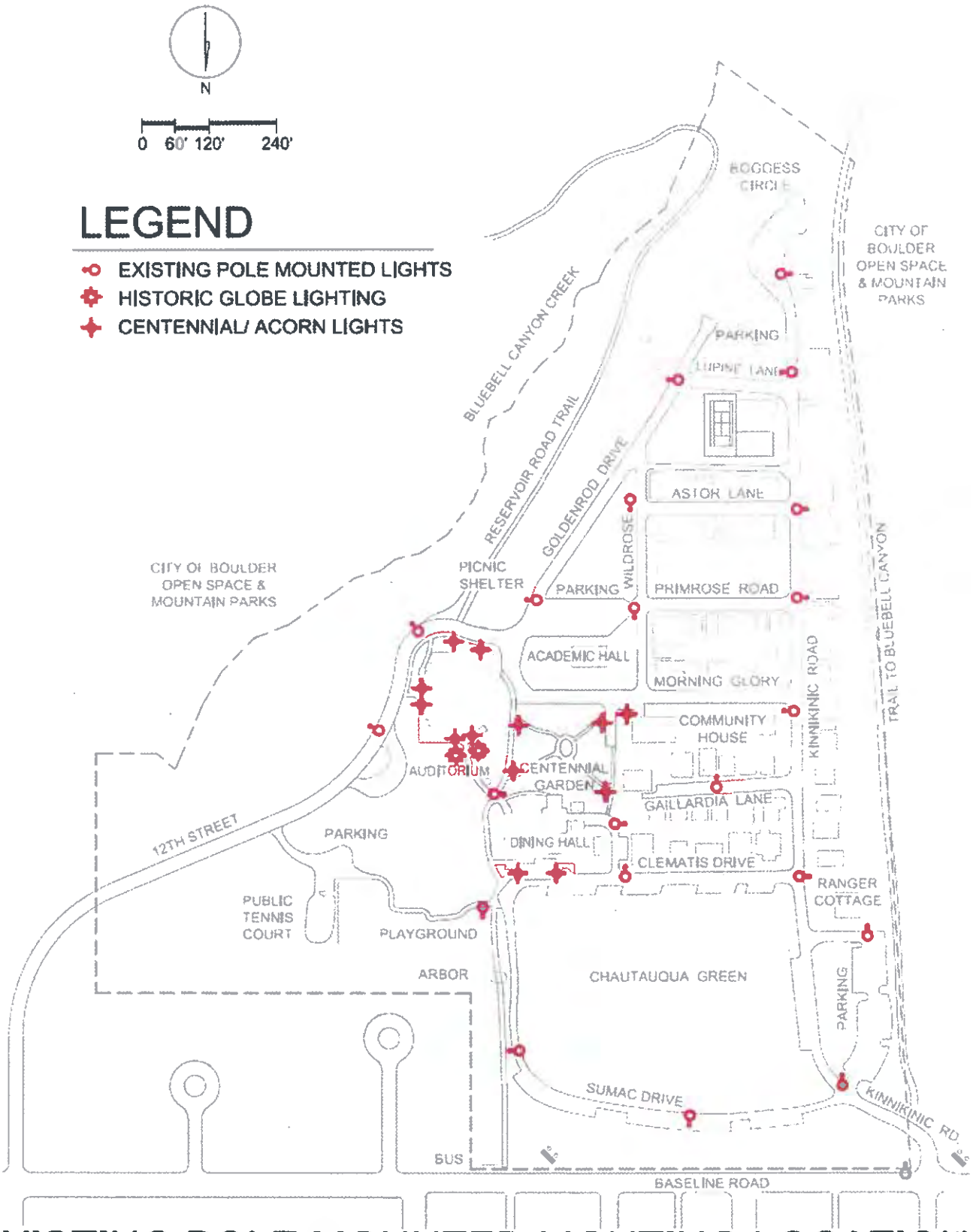

EXISTING POLE MOUNTED LIGHTING LOCATIONS (APPROX.)

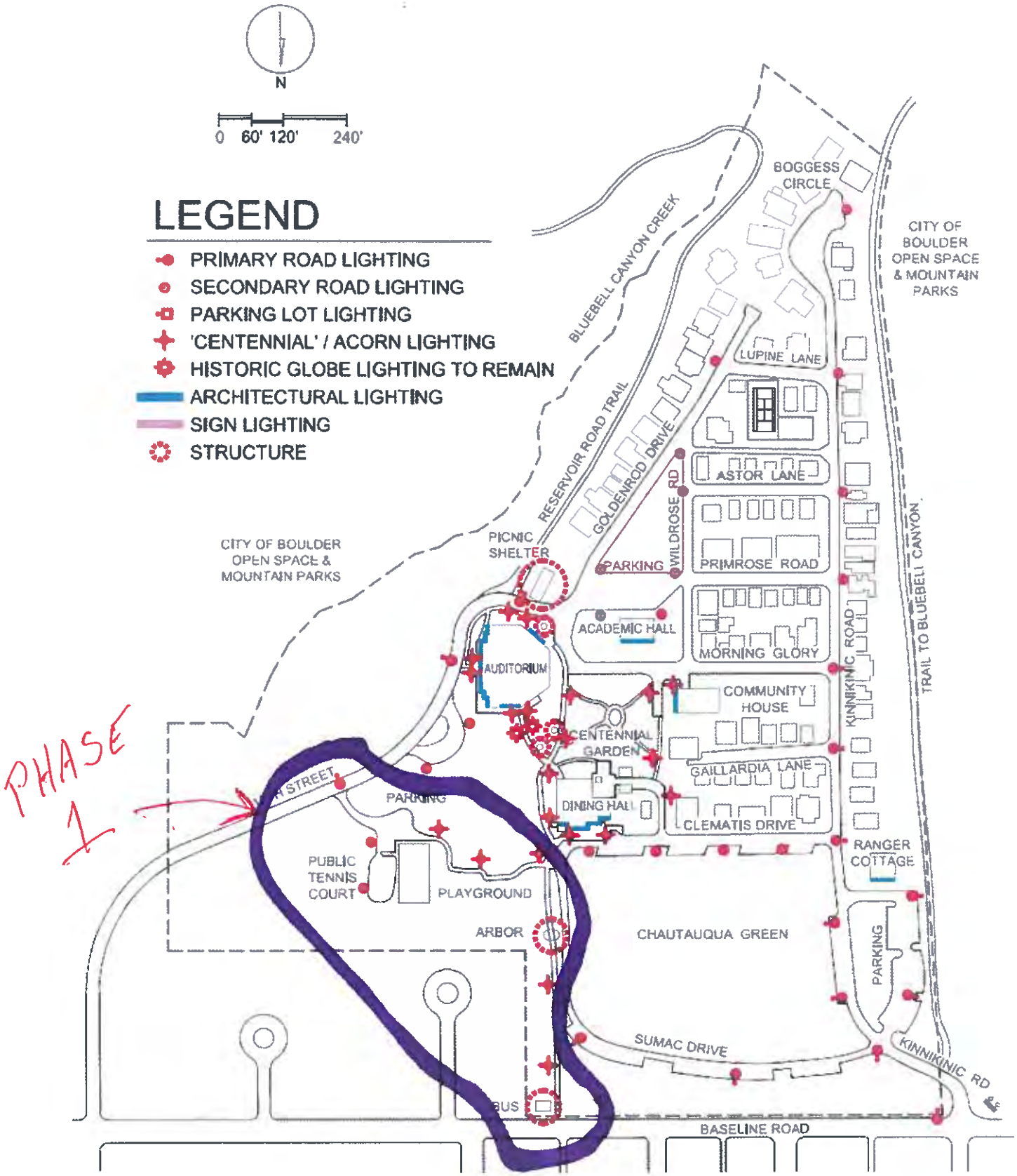

LIGHTING MASTER PLAN

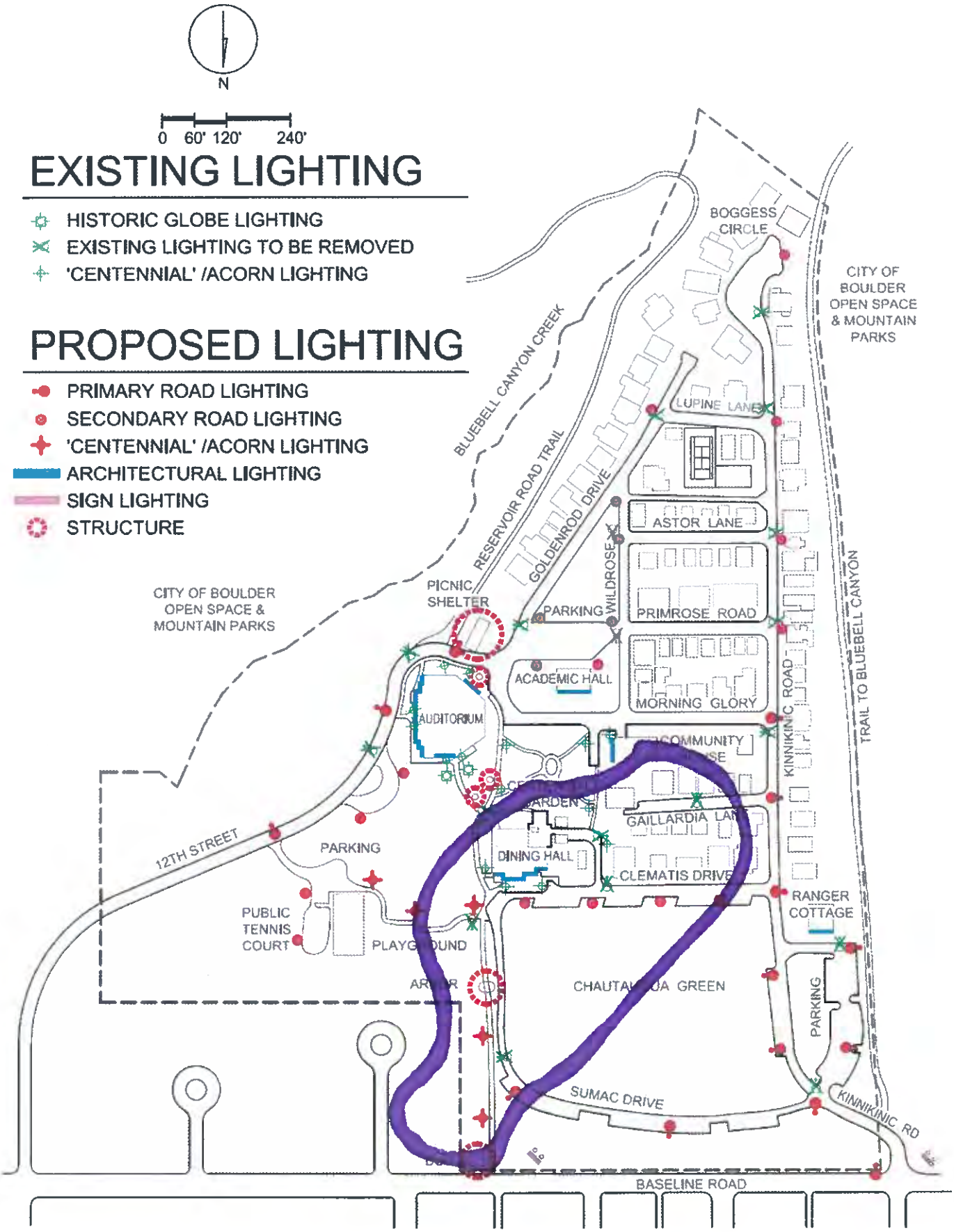

EXISTING & NEW PROPOSED LOCATIONS (APPROX.)

Appendix A

NOTE: TEARDROP SHAPED GLOBES INTRODUCE ADDITIONAL UPLIGHT AND DO NOT MEET THE CITY OF BOULDER LIGHTING ORDINANCE. BECAUSE THE LAMP IS CONCEALED FULLY WITHIN THE OPAQUE SHROUD, A VARIANCE MAY BE POSSIBLE.

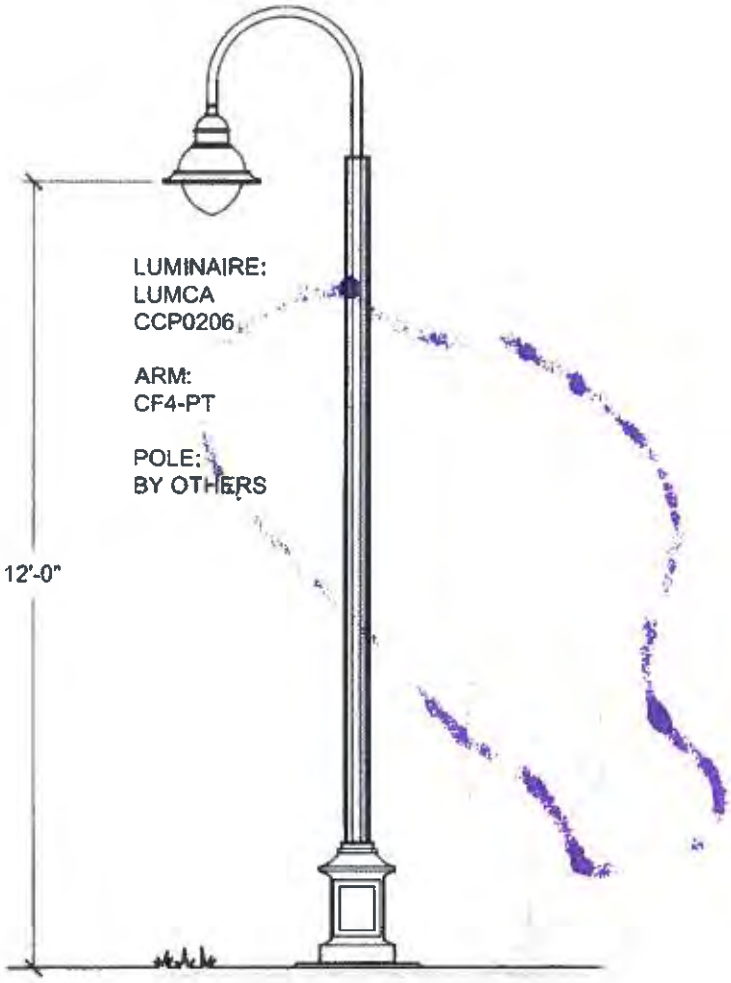

SECONDARY

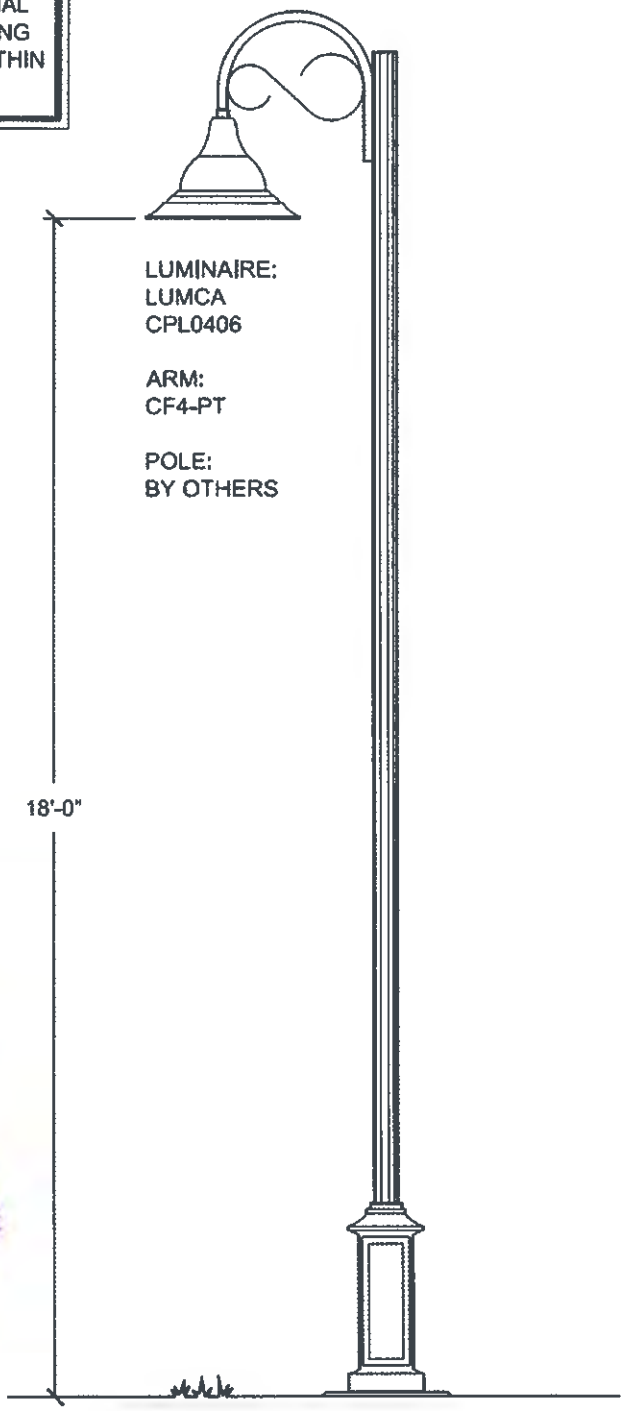

PRIMARY

CHAUTAUQUA STREET LUMINAIRES

Appendix B

In 1998, Clanton & Associates completed a lighting design for the Centennial Garden. At that time, other recommendations were made for the auditorium architectural lighting and pedestrian lighting north of the arbor and near the playground. This appendix contains the documentation for those recommendations. The concepts and designs shown in the masterplan continue the recommendations made at that time.

"FALSE" LIGHTED WINDOW

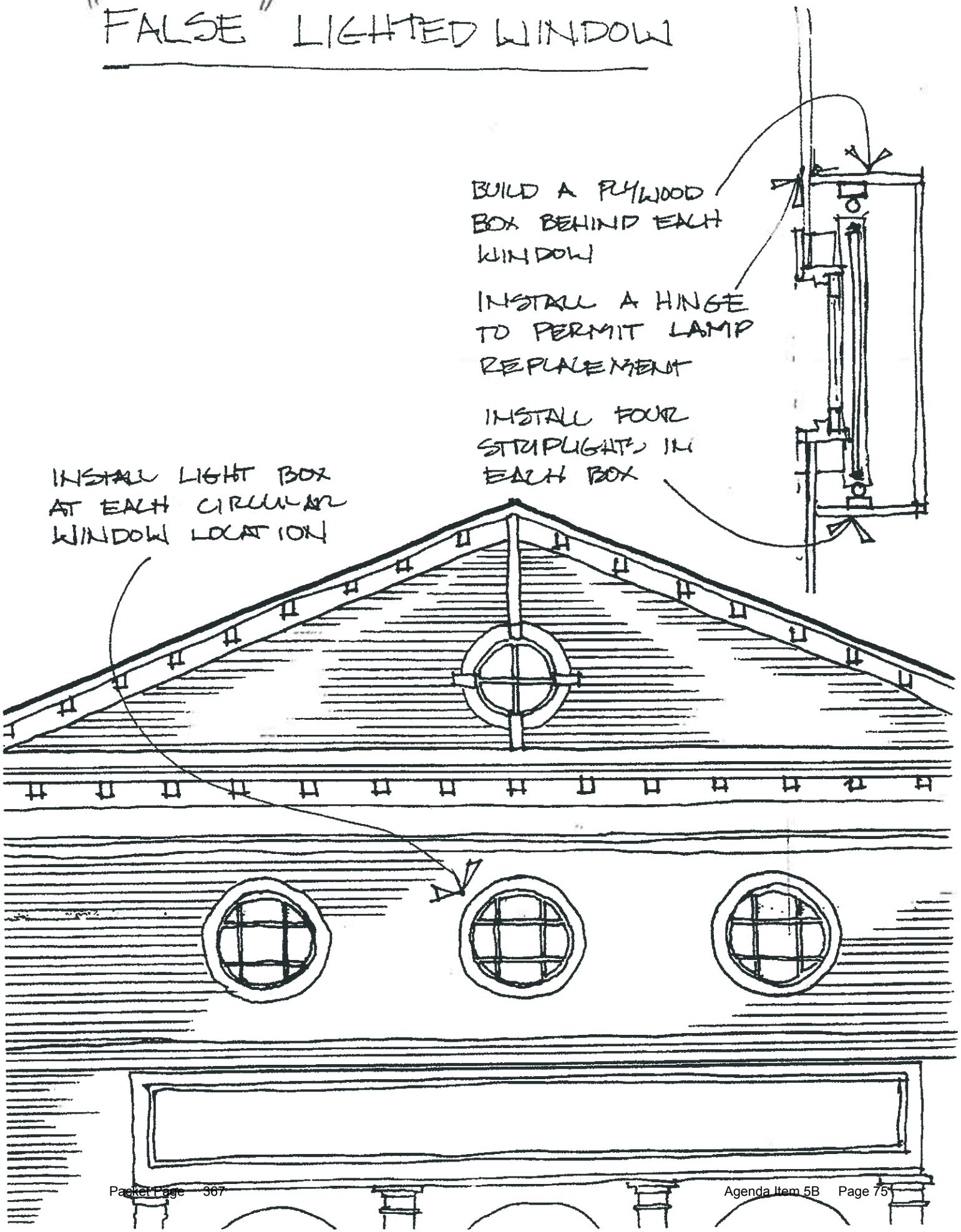

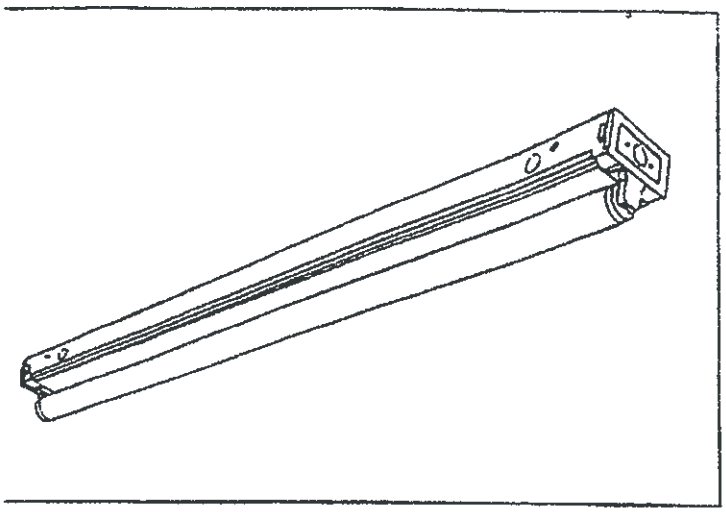

CS2-1, CS3-1
CS4-1, CS8-1
STRAIGHTLINER
CHANNEL ONE LAMP TS & RS

Type: _____

Job Description: _____

FEATURES:

Available 2′, 3′, 4′ or 8′.

Heavy die formed steel channel.

Rotary lock lampholders for positive lamp contact.

Channel ends double as joiners.

Individual or row mounting. Surface or suspended.

Ballast covers on 4′ and 8′ units are secured with 1/4-turn fasteners.

SPECIFICATIONS:

Ballasts
Energy efficient ballasts are thermally protected, automatic resetting, Class P, high power factor, CBM, sound rated A, unless otherwise specified. 20 watt ballasts are trigger start, low power factor, Class P. All are U.L. listed.

Housing
Die formed steel with heat sink embossments for cooler running ballasts. Socket saddles are factory installed.

Finish
All parts pre-painted with high gloss baked white enamel, minimum reflectance 86%, applied over iron phosphate pre-treatment for maximum adhesion and rust resistance.

Labels
All fixtures carry the U.L. label. 2′, 3′ and 4′ units are listed for use on combustible low density, cellulose fiberboard ceilings. (CSA approval available. Use Suffix "CSA"). (HPF only).

Cross Section

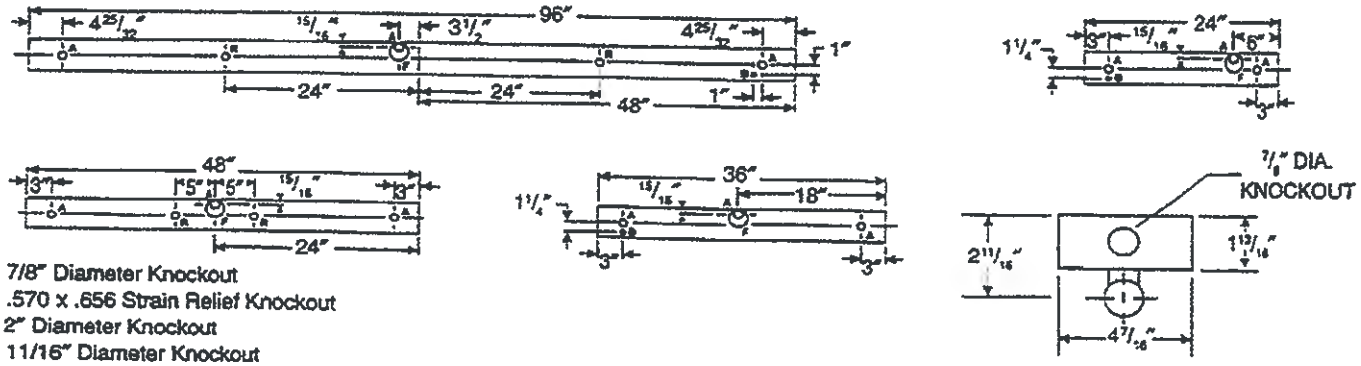

A - 7/8″ Diameter Knockout
B - .570 x .656 Strain Relief Knockout
F - 2″ Diameter Knockout
R - 11/16″ Diameter Knockout

Note 1: All Non-Shielded (strip) fixtures – Deduct 1/16″ from overall dimension for continuous row mounting. Dimensions shown include end panel.

Mounting Data

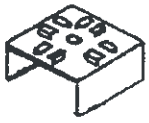

CSZTF
Flush Mount

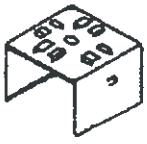

CSZT
1-1/2″ Space

CSTH
Slide Clamp
Tong Hanger

Accessories

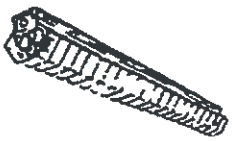

CSWG4 Wire Guards
CSWG3 Wire Guards

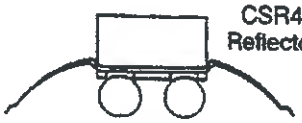

CSR4
Reflector

CSRA4
Reflector

C1

UPLIGHTING FOR COPULA

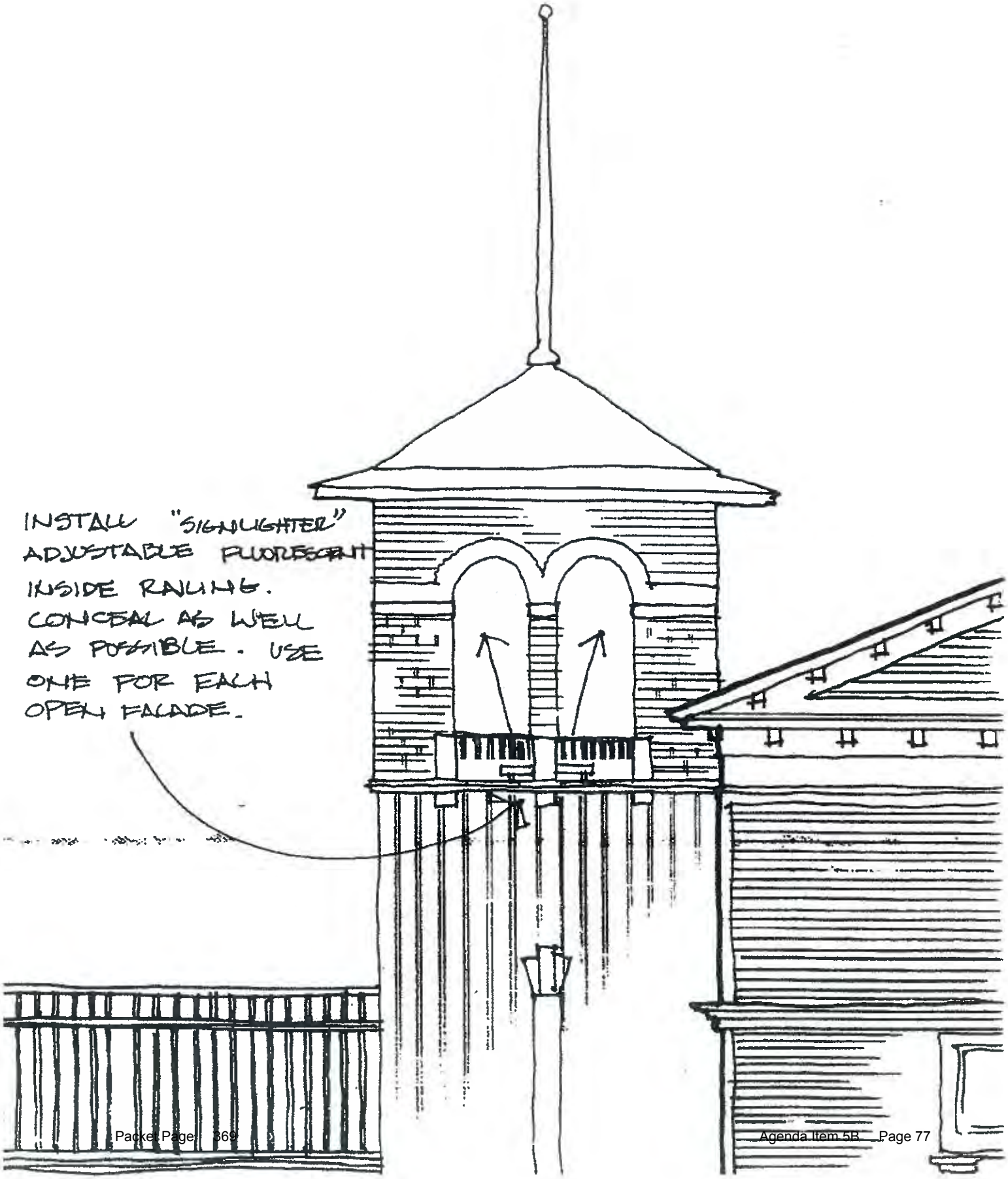

Outdoor Sign and Poster Luminaire

SLA

Asymmetric Distribution End Arm Mount

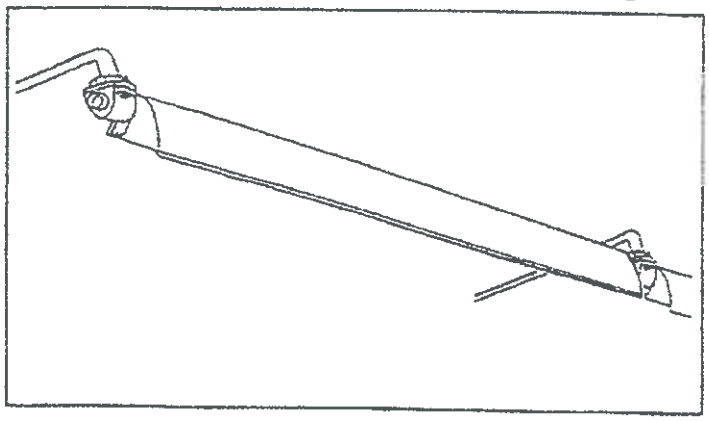

Type: _____

Job Description: _____

APPLICATIONS:

- Wet location sign light can be mounted in any direction and still operate properly and retain its wet location approval.
- Asymmetric reflector provides outstanding distribution for a crisp clean appearance.
- Choice of lamps allows maximum flexibility for any application.
- Choice of three ballast types for any application.
- U.L. approval for uplighting even in outdoor applications.

Ballast & Electrical

The SLA may be ordered with or without ballasts. Fixtures less ballasts may be wired with any of a wide choice of ballast types available including the plastic sign types. A choice of three outdoor ballasts are available from the factory. Other ballasts may be ordered for indoor use. Ballasts must be remote mounted no longer than 15' from the socket. For electronic ballast lead lengths, consult factory. Units are wired with leads in socket housings only. All conduit, condulets and extension wiring are furnished by the installing contractor.

SPECIFICATIONS:

Construction

Socket housings are constructed of die-cast aluminum and permit easy access to the socket and ample splicing room. Full socket housings on unit must be used. Neoprene sleeves around sockets provide weathertight enclosure. Reflector is constructed of extruded aluminum and is optically designed to provide maximum illumination. Reflector ends are precision die cast with a keyed shoulder which securely locks the reflector to the socket housing. A simple nut adjustment gives the reflector 360° aiming. One inch diameter holes are provided at each end of the reflector for drainage.

Shielding

A "DR" acrylic shield with outstanding impact resistance is recommended for areas with temperatures 35°F or lower. The shield is optional and protects the lamp for wind, ensuring proper lamp operating temperature. The shield must be specified as shown in the ordering guide.

Finish

Exterior finish is anodized diffuse. Optional painted colors are available. Internal reflector is high reflectance baked white enamel.

Installation

The SLA may be mounted singly or in continuous rows. See back of this page for a typical layout.

Labels

The SLA is U.L. approved as being raintight or weatherproof in normal outdoor use. U.L. approved for uplighting or downlighting and bears appropriate U.L. labels.

General Assembly

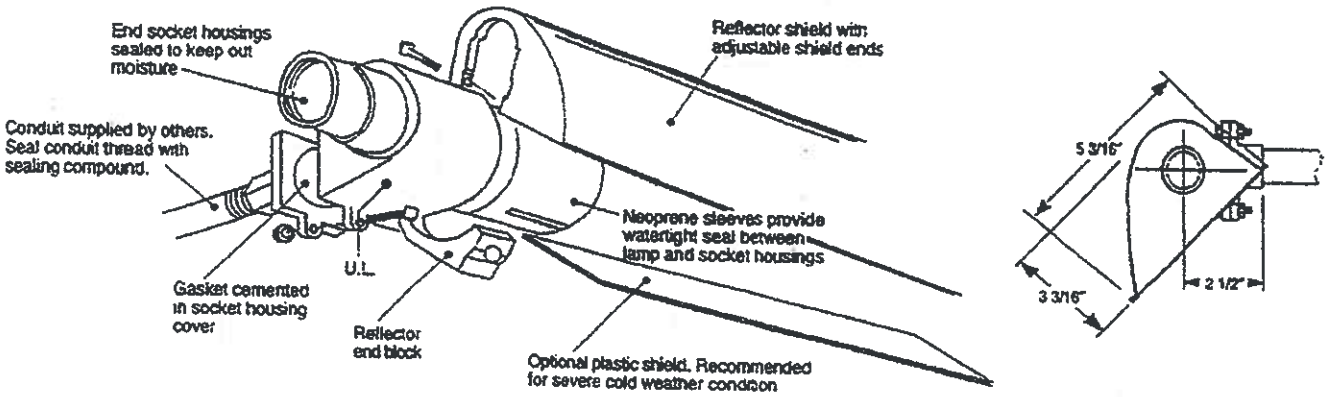

Socket housings are threaded for standard 3/4" rigid conduit.

08

FORUM

PRO-10 (430 MA, T-8)
PRO-30 (800 MA, T-12)
PRO-40 (1500 MA, T-12)

PROJECTOR (Outdoor,Wet Location)

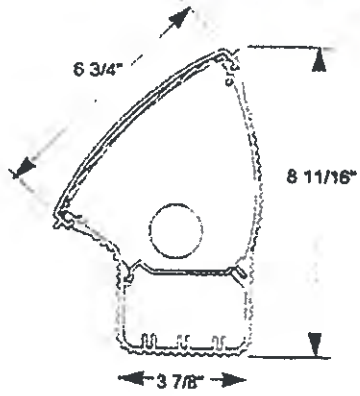

PRO-10

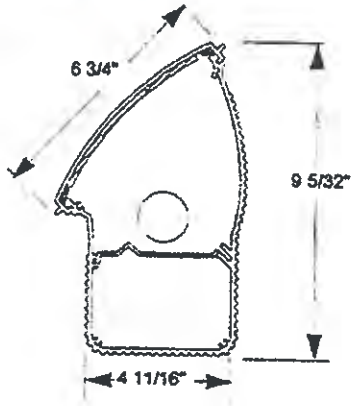

PRO-30, PRO-40

FORUM PROJECTOR SERIES
The PRO is a heavy duty, wet location, integral ballasted, floodlight with a high degree of beam control. The optics are designed to evenly illuminate vertical or horizontal surfaces.

Applications: For illuminating sides of buildings, signs, columns, parapets and facia.

Mounting: The PRO can be ground, parapet, or ledge mounted as close as one foot from the surface to be illuminated The mounting brackets permit 359 degree rotation for up or down orientation and end-to-end mounting for an uninterrupted light pattern.

HOW TO SPECIFY

WET LOCATION | LIGHT LENGTH 4', 6' or 8' | BRIGHT DIP ANODIZED (STARDARD) CUSTOM PAINTED FINISHES AVAILABLE

PRO - 10 X L - 120 - FINISH

10 = 430 MA
30 = 800 MA
40 = 1500 MA

VOLTAGE
120 V or 277 V

SPECIFICATION:

Housing: Shall be .125 thick extruded aluminum 6063-T5 alloy with external surface ribs for heat dissipation to prolong ballast life. Sockets shall be prewired and factory installed. The ends shall be .250 thick cast aluminum mechanically attached and gasketed for water tightness. Standard finish shall be bright dip anodized.

Lens: Shall be extruded acrylic with 100% DR for maximum toughness. Lens shall be gasketed along all edges for water tight seal.

Reflector: Reflector shall be die formed 22 gauge aluminum with 86% reflectivity

Mounting Brackets: Shall be fabricated from 12 gauge CRS with provisions for 359 degree rotation.

Ballast: Ballast shall be CBM/ETL certified Class P.

Product Listing: The fixture shall be listed with U.L.

CANDLEPOWER SUMMARY

CATALOG NO.: PRO-10
LAMP TYPE: F40T12WW/RS
LUMENS: 3200
FIXTURE EFFICIENCY: 67%
LUMINAIRE INPUT WATTS: 51
TEST REPORT NO.: B.A.L 5822.0

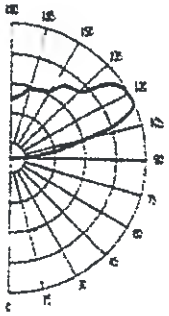

ANGLE	CANDELA	LUMENS
180	562	
175	595	53
165	702	155
155	732	208
145	867	268
135	931	277
125	1257	355
115	1296	395
105	778	307
95	231	95
90	91	
85	42	16
75	37	11
65	25	6
55	15	3
45	4	0
35	0	0
25	0	0
15	0	0
5	0	0
0	0	

CATALOG NO.: PRO-30
LAMP TYPE: F48T12/WW/HO
LUMENS: 4200
FIXTURE EFFICIENCY: 67%
LUMINAIRE INPUT WATTS: 84
TEST REPORT NO.: B.A.L. 5822.MOD

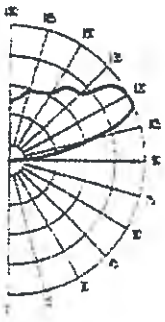

ANGLE	CANDELA	LUMENS
180	736	
175	779	53
165	920	155
155	959	208
145	1136	268
135	1220	277
125	1647	355
115	1698	395
105	1019	307
95	303	95
90	119	
85	55	16
75	48	11
65	33	6
55	20	3
45	5	0
35	0	0
25	0	0
15	0	0
5	0	0
0	0	

FORUM, INC. 214 NORTH LEXINGTON AVE. PITTSBURGH, PA 15208

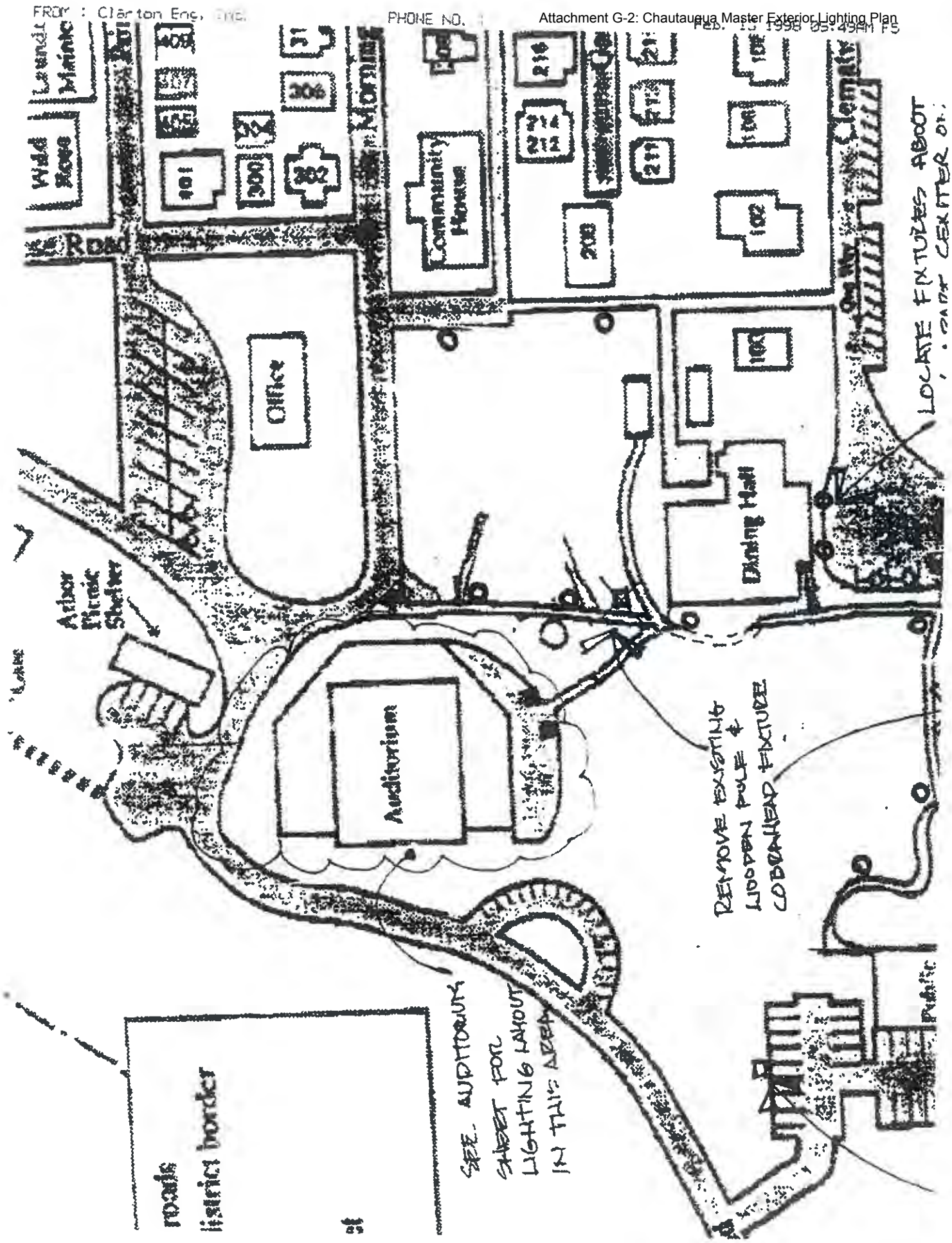
FROM : Clarton Eng. Inc.
PHONE NO.
Feb. 13 1998 05:49AM P5
Laundry
Maintenance
Wild Rose
Road
Office
Community House
Dining Hall
Auditorium
Arbor Picnic Shelter
Cemetery
Public
LOCATE FIXTURES ABOUT
REMOVE EXISTING
WOODEN POLE &
COBRAHEAD FIXTURE
SEE AUDITORIUM
SHEET FOR
LIGHTING LAYOUT
IN THIS AREA
roads
historic border

CHAUTAUQUA

Colorado Chautauqua National Historic Landmark Master Signage Plan: Wayfinding and Interpretive

February 27, 2009

Presented by:
ECOS Communications, Inc.
for
Colorado Chautauqua Association

Contents

Background 1

Wayfinding Signs
- Overview 2
- Color Palette 3
- Fonts 4
- Sign Types 5
- G: Gateway 6
- P: Pedestrian Directional 8
- V: Vehicular Directional 11
- A: Identity 14
- B: Area Identity 16
- D: Directory Map 18
- C: Changeable 20
- Installation 22

Interpretive Signs
- Overview 23
- Color Palette 24
- Fonts 25
- Photography 27
- Illustration 28
- Flourishes, Rules, and Dingbats 29
- Interpretive Writing 30
- Sign Types 31
- E1-E4: Slopers 32
- E5-E6: Wall 39
- E7, E8, E9, E10: Tour Locators 44
- Installation 48

Locator Maps 49

Purpose
This document serves as a set of implementation instructions for a new system of wayfinding and interpretive signs at the Colorado Chautauqua National Historic Landmark. The recommendations and specifications herein comply with the recently amended (February 2009) Chautauqua Park Historic District Design Guidelines, originally adopted by the City of Boulder's Landmarks Preservation Advisory Board in June 1987.

Context
In 2007, the Colorado Chautauqua Association (CCA) underwent a site-wide interpretive planning process using outside consulting. The resulting document, the Interpretive Services Plan for Chautauqua, sets forth detailed recommendations for a set of wayfinding signs and a set of interpretive signs to better orient and educate visitors about the site: navigation, offerings, and historic significance.

In addition, CCA applied for and received National Historic Landmark status for the Colorado Chautauqua site in 2006. The heritage and preservation enthusiasts anticipated to visit Chautauqua will expect a level of interpretation on par with other NHL sites. This expected increase in visitors specifically interested in Chautauqua's historical story brings another strong argument to the need for high quality interpretive signage (available to visitors without need for personal interpretive staff).

Scope
The Design Guidelines presented herein shall apply to all new signage installed on the 40 acres designated a National Historic Landmark. While all of this property is owned by the City of Boulder, its management is split among three entities: CCA and two City of Boulder departments: Parks and Recreation, and Open Space and Mountain Parks. All signage occurring on property within the National Historic Landmark boundary shall be subject to the guidelines herein, regardless of management status.

Note: City of Boulder regulatory signage related to parking, speed limits, and all city code is not subject to these Design Guidelines.

CCA is an independent non-profit entity that owns 63 historic buildings on the site (cottages, lodges, and the Community House) and manages 26 acres at the site, including the entire historic core and the site's most important public structures: the Auditorium, the Dining Hall, and the Academic Hall. The mission of the Colorado Chautauqua Association is to preserve, perpetuate, and improve the site and spirit of the historic Chautauqua by enhancing its community and values through cultural, educational, social and recreational experiences.

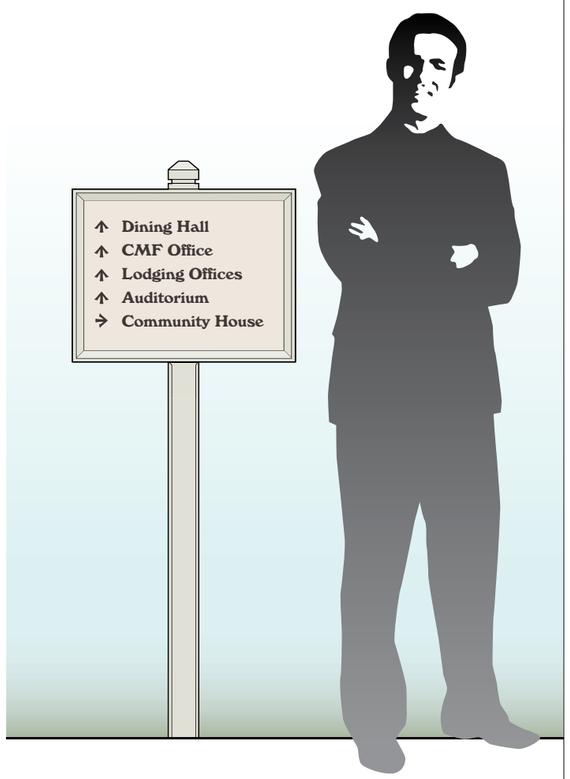

Introduction
Visitors to the Colorado Chautauqua National Historic Landmark and associated park and trail system need to be properly directed around the site and educated about its offerings. The system of strategically placed directional, identity, and directory signage proposed in this plan will serve this purpose, and greatly improve the visitor experience.

The intact historic nature of the site demands that great care be taken in the design, materials, size, messaging, and placement of signs. The Chautauqua motto of "Voluntary Simplicity" governs each decision, even as care is taken to match the style of the period of significance (1898-1930) where it may show ornamentation or typical graphic elements.

Colors and type styles used throughout the wayfinding system draw from the site's primary public buildings and what has become the Chautauqua style over the past several decades.

Materials are historically appropriate, and consist primarily of painted or stained wood for all posts and sign frames. Design elements are few and simple, making the signs relatively easy and inexpensive to produce.

Design Challenges
The scale of Chautauqua has stayed intimate over time, even as American vehicles, municipal codes, and habits call for larger roadways and greater caution. The goal with this wayfinding system is to strike a balance between making signage large enough to be legible and serve its purpose, while keeping sign panel sizes and heights to a minimum. This balance is attempted again where it comes to color: keep the signage consistent with the site's neutral palette while giving enough visual interest to call visitors' attention to directions and information.

Note: Requirements of the Americans with Disabilities Act have been considered in specifications for the signs and graphics herein.

Wayfinding: Color Palette

Colors selected for wayfinding signage were derived from those found in existing architecture and are specified using Kwal paint formulas.

Lettering for signage is specified as a matte black vinyl from Avery Graphics.

Sample	Kwal Paint Match	Pantone Closest Match
	CL 2933M - Salsify	413
	CL 2725D - Dissent	465
	8673M - Tavern Taupe	7535
	CW055W - Honeywind	413
	7735D - Topaz	7405
	8644M - Seal Beach	7538
	Black	100% Process
	CW057W - White Solitude	N/A

Wayfinding: Fonts

The Windsor font is currently used on all Chautauqua Park signage. During an exploration of period typography, it was determined that Windsor is relevant to the character and styles used at the turn of the century.

1. **Full Windsor display**

2. **Directional Signs**
   Initial Caps

3. **Identity Signs**
   Large/Small Caps

4. **Large/Small Caps Proportion**
   Small caps are sized at 77% of their larger counterparts.

1

ABCDEFGHIJKLMNOPQRSTVWXYZ
abcdefghijklmnopqrstvwxyz

2

Community House

3

COMMUNITY HOUSE

4

Wayfinding: Sign Types

Wayfinding signs on the site fall into two primary categories: Directionals and Identities. Directory maps and other programmatic signage is considered informational.

Directional signs may be intended primarily to be viewed either by visitors traveling along roadways (Vehicular Directionals) or by visitors traveling along footpaths (Pedestrian Directionals).

Type G - Gateways
Occur at primary property entrances.

Types P1 and P2 - Pedestrian Directionals
Provide directional information to pedestrian traffic. Scaled down versions of V (Vehicular Directional) signs, located on or adjacent to pedestrian pathways.

Types V1 and V2 - Vehicular Directionals
Provide directional information to vehicular traffic. Their secondary function is to provide directional information to pedestrian traffic. For placement on roadways on the right side of the driver, before a decision point.

Types A1 and A2 - Building Identities
Identify buildings. These are free-standing, single post ground signs positioned parallel to building, scaled to be viewed by vehicles and pedestrians.

Types B1 and B2 - Area Identities
Identify open spaces and features of interest (such as "Chautuaqua Park"). These are free-standing, double post ground signs positioned parallel to the road, scaled to be viewed by vehicles and pedestrians.

Type D - Directory Maps
Provide visual orientation and destination locations. Placed in areas where visitors congregate or merge.

Type C - Changeable Panels
Provide seasonal or alternating information to visitors. Applied to any sign that requires a changeable messaging.

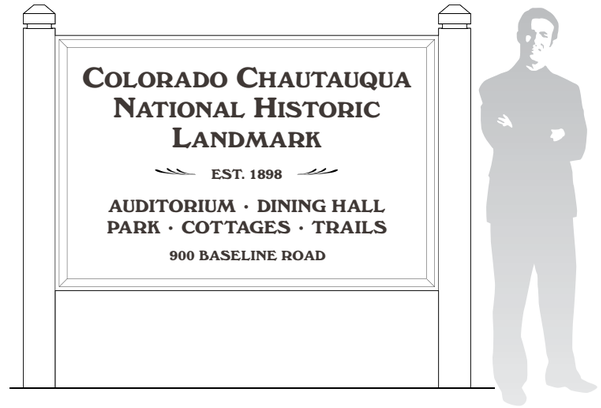

Type G

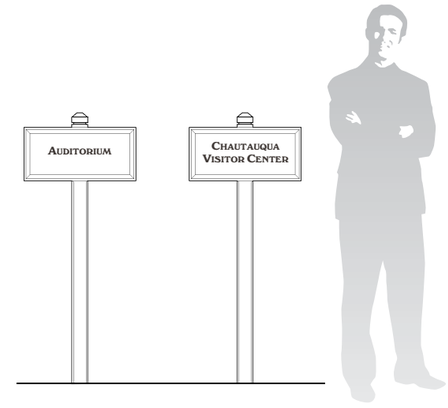

Types A1 and A2

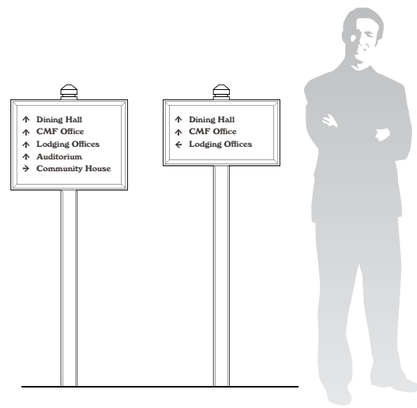

Types P1 and P2

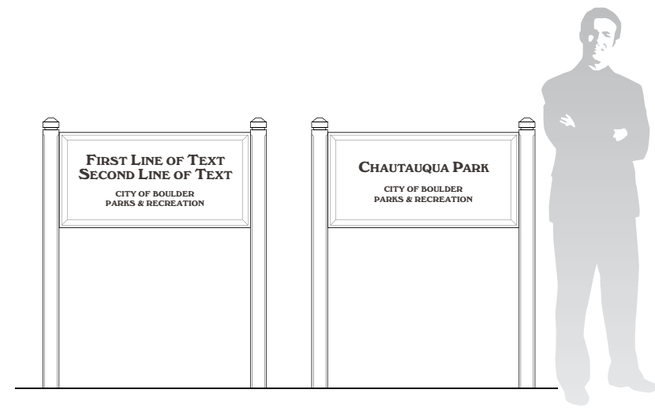

Types B1 and B2

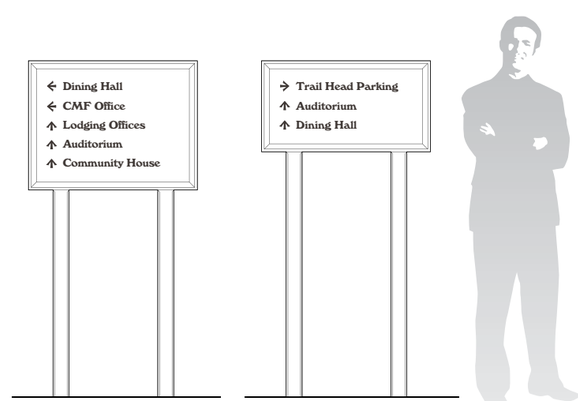

Types V1 and V2

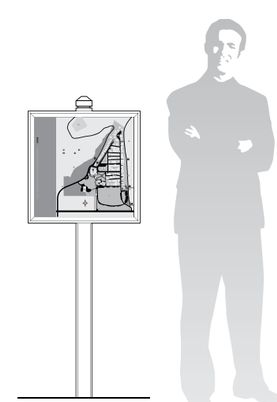

Type D

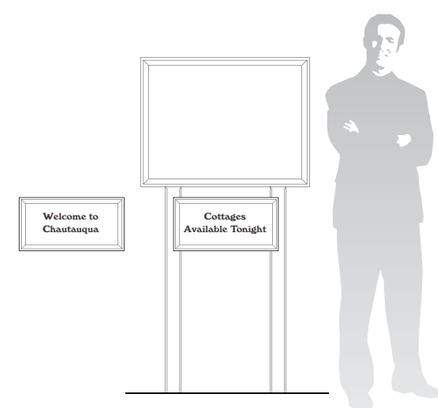

Type C

Wayfinding: Type G - Graphic Layout

The existing gateway sign (entrance identity) at Chautauqua's Baseline entrance will be repainted, and a new message will be applied to the front and back faces. Other primary entry signs to be developed will follow this general design, and may be one- or two-sided.

1. Finished with exterior grade penetrating opaque stain to match 8644M Seal Beach.
2. Finished with exterior grade sign paint with smooth low-sheen finish, to match CL2933M Salsify.
3. Finished with exterior grade enamel to match CW057W White Solitude.
4. Matte Black A9090-O High Performance opaque vinyl (Avery), or black silk screen/print.

NOTE:

The decision to choose one fabrication method over the other for graphic information should be made considering sign size, durability needed/desired, and risk of vandalism.

Wayfinding: Type G - Structure

Additional gateway signs (entrance identity) may be fabricated and installed at alternate entrances.

1. 1'' thick SignPly (or approved equal) Single-sided, painted aluminum over furniture grade exterior plywood core.
2. Stainless steel angle bracket with galvanized or stainless steel wood screw.
3. Frame made from clear grain hardwood or cedar and finished smooth.
4. Clear grain cedar post. Post cap routed and sawed from solid post material – not added as a separate component.

NOTE:

All surfaces of sign frame/panel and post must be primed and painted prior to assembly to ensure complete weather seal.

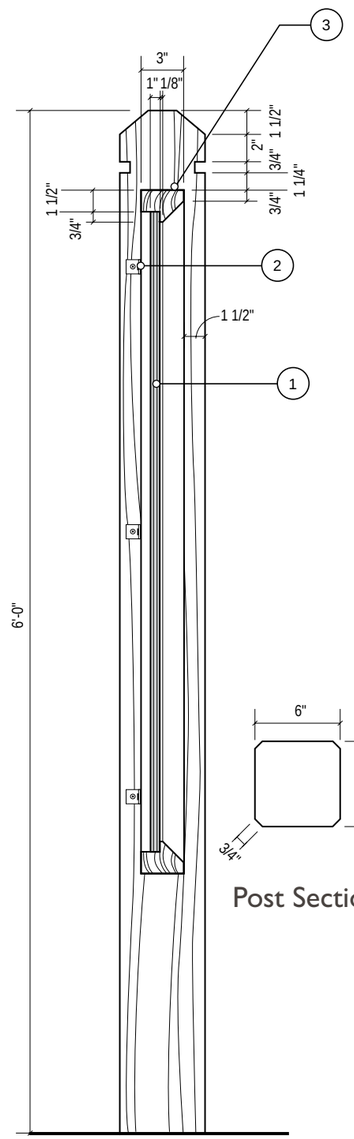

Section View

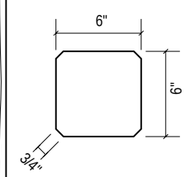

Post Section

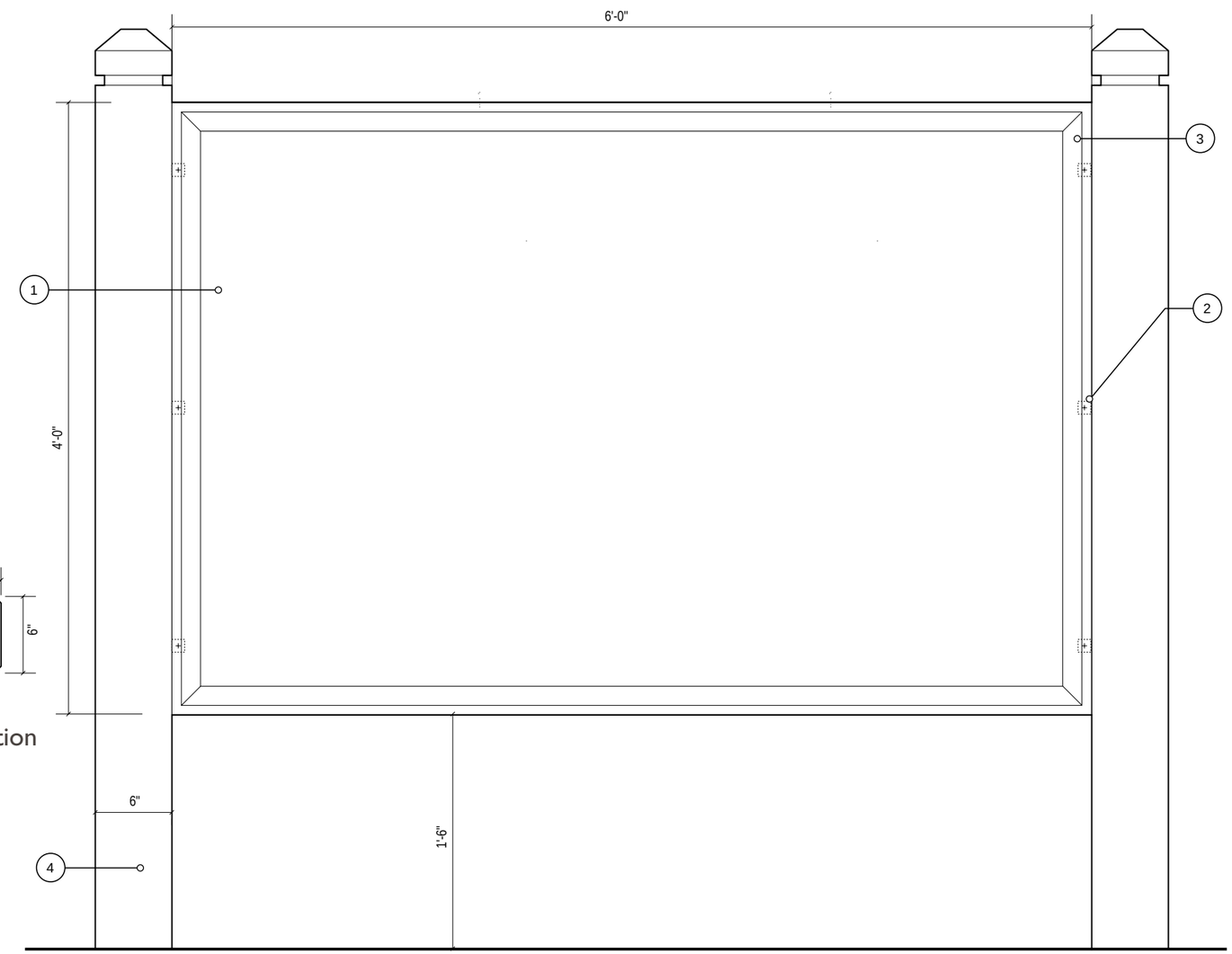

Front View

Wayfinding: Types P1 and P2 - Graphics

Pedestrian directional signs include two size formats. The large format will accommodate four to five line items. The small format will accommodate one to three line items.

1. Finished with exterior grade penetrating opaque stain to match CL 2933M Salsify.
2. Finished with exterior grade enamel to match CW057W White Solitude.
3. Matte Black A9090-O High Performance opaque vinyl (Avery), or black silk screen/print.

NOTE:

The decision to choose one fabrication method over the other for graphic information should be made considering sign size, durability needed/ desired, and risk of vandalism.

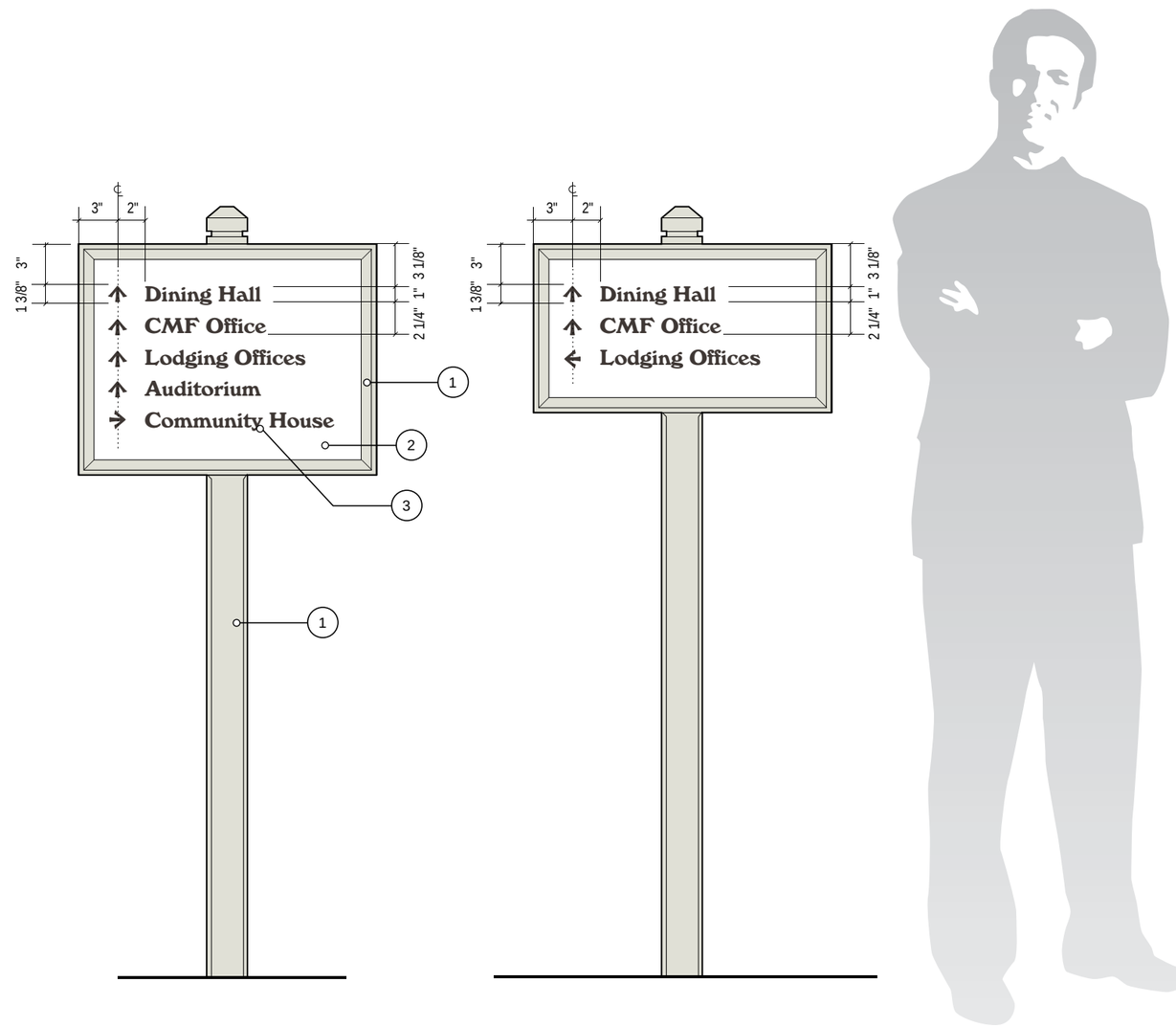

Wayfinding: Type P1 - Structure

Large pedestrian directional signs are to be placed perpendicular to pedestrian routes accessing more than three destinations.

1. 3/4'' thick SignPly (or approved equal) Single-sided, painted aluminum over furniture grade exterior plywood core.
2. Galvanized wood screw.
3. Frame made from clear grain hardwood or cedar and finished smooth.
4. Clear grain cedar post. Post cap routed and sawed from solid post material – not added as a separate component.

NOTE:

All surfaces of sign frame/panel and post must be primed and painted prior to assembly to ensure complete weather seal.

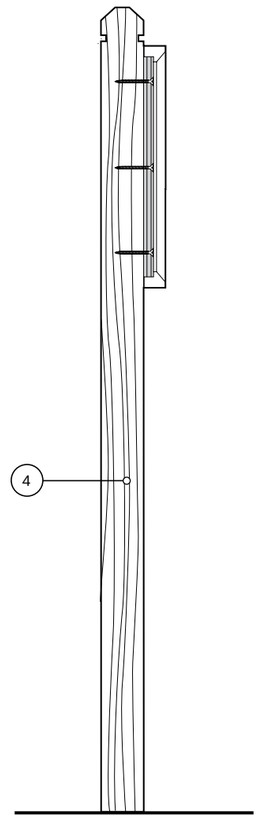

Section View
Single Face

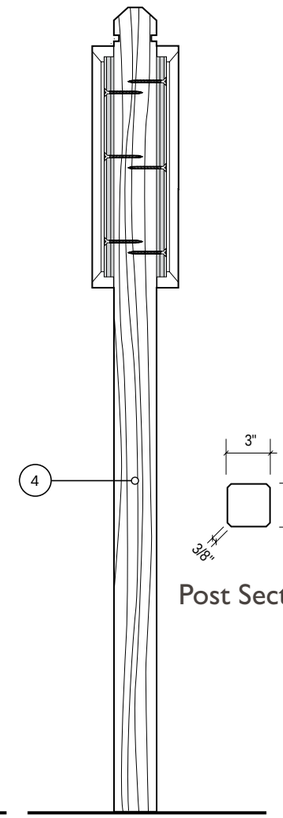

Section View
Double Face

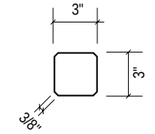

Post Section

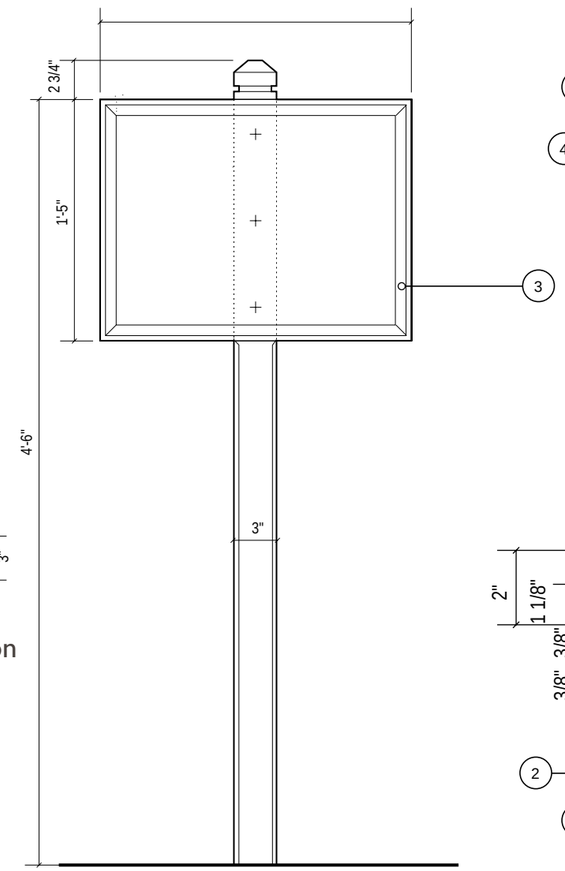

Front View

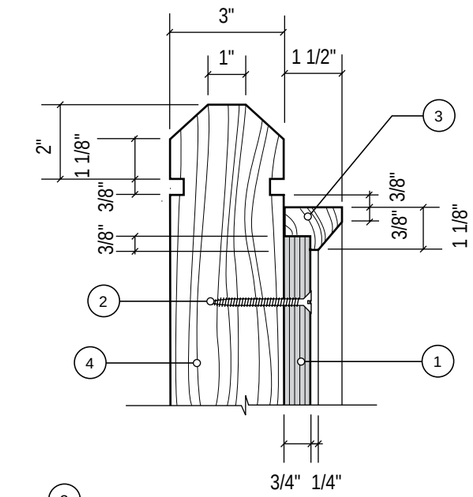

Detail View
Single Face

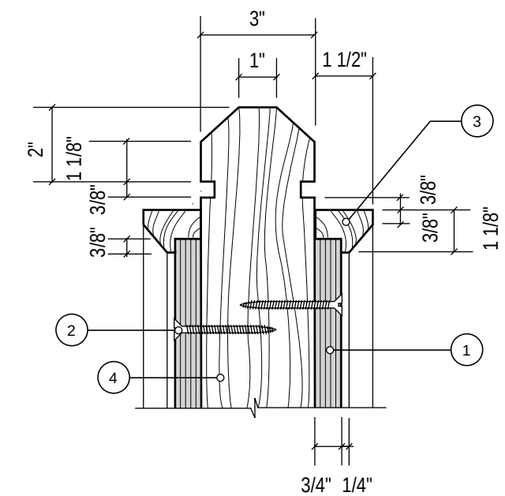

Detail View
Double Face

Wayfinding: Type P2 - Structure

Small pedestrian directional signs are to be placed perpendicular to pedestrian routes accessing three or fewer destinations.

1. 3/4'' thick SignPly (or approved equal) Single-sided, painted aluminum over furniture grade exterior plywood core.
2. Galvanized wood screw.
3. Frame made from clear grain hardwood or cedar and finished smooth.
4. Clear grain cedar post. Post cap routed and sawed from solid post material – not added as a separate component.

NOTE:
All surfaces of sign frame/panel and post must be primed and painted prior to assembly to ensure complete weather seal.

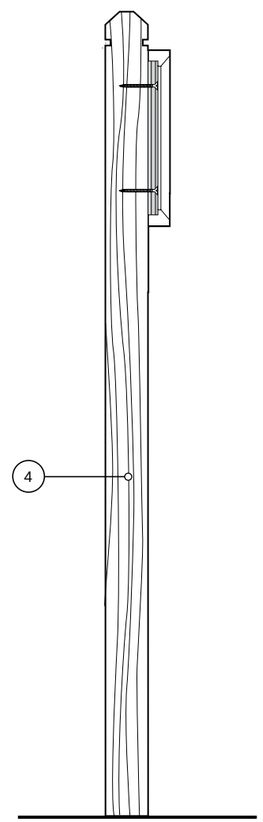

Section View
Single Face

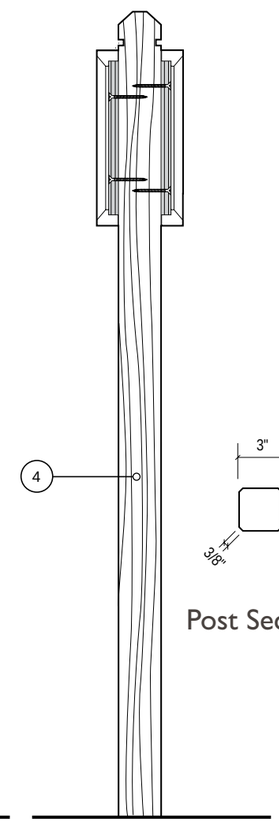

Section View
Double Face

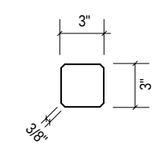

Post Section

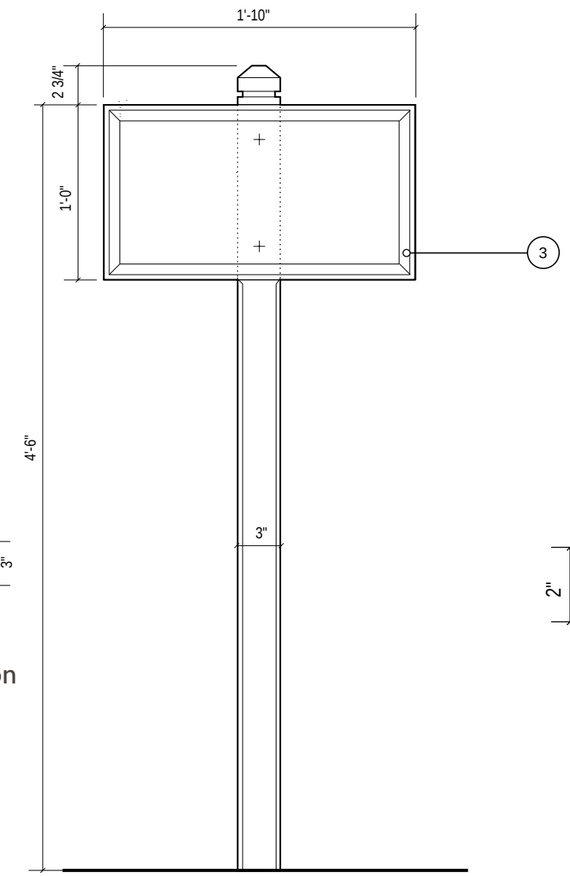

Front View

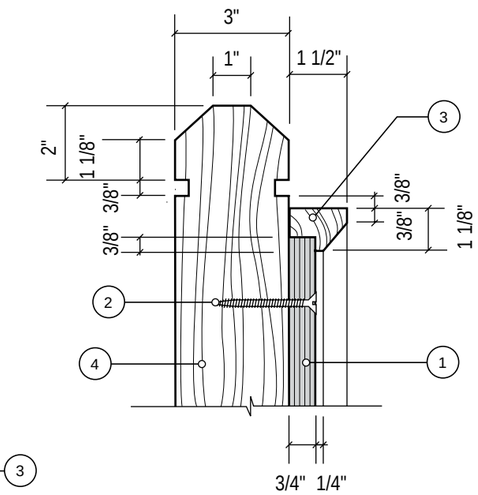

Detail View
Single Face

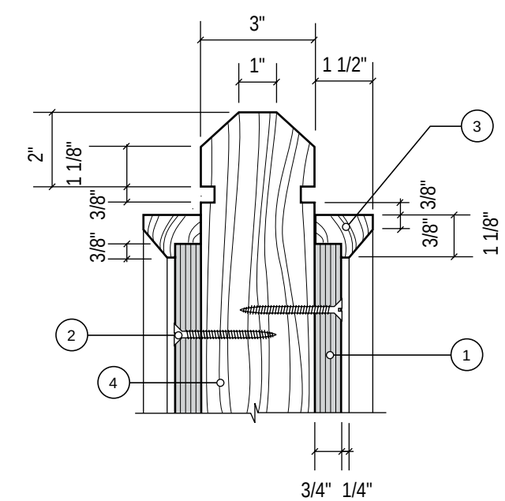

Detail View
Double Face

Wayfinding: Types V1 and V2 - Graphics

Vehicular directional signs include two size formats. The large format will accommodate four to five line items. The small format will accommodate one to three line items.

The smaller of two types of Vehicular directional signs will accommodate one to three line items.

1. Finished with exterior grade penetrating opaque stain to match CL 2933M Salsify).
2. Finished with exterior grade enamel to match CW057W White Solitude.
3. Matte Black A9090-O High Performance opaque vinyl (Avery), or black silk screen/print.

NOTE:

The decision to choose one fabrication method over the other for graphic information should be made considering sign size, durability needed/ desired, and risk of vandalism.

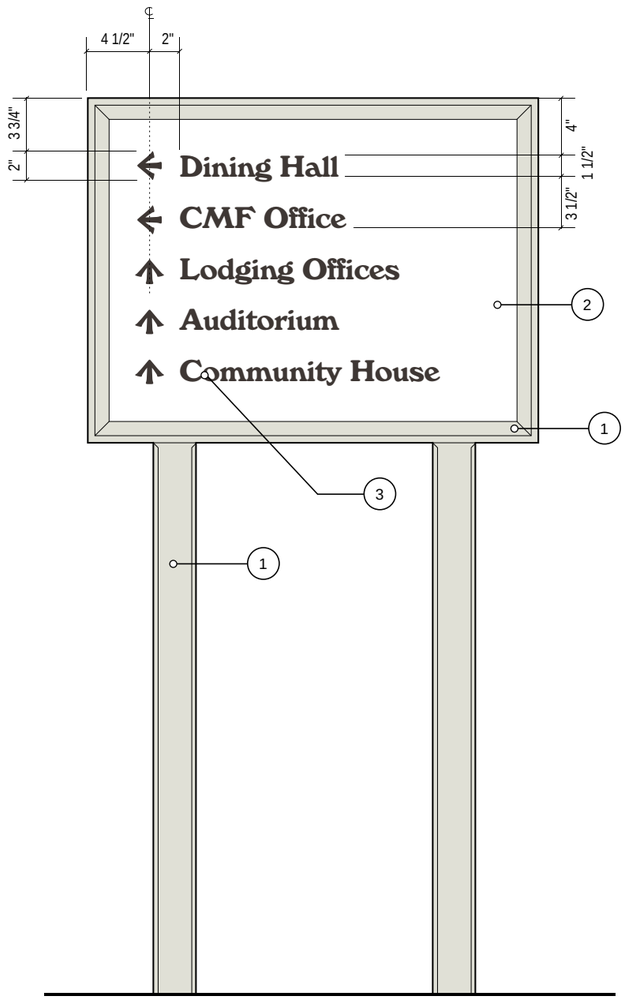

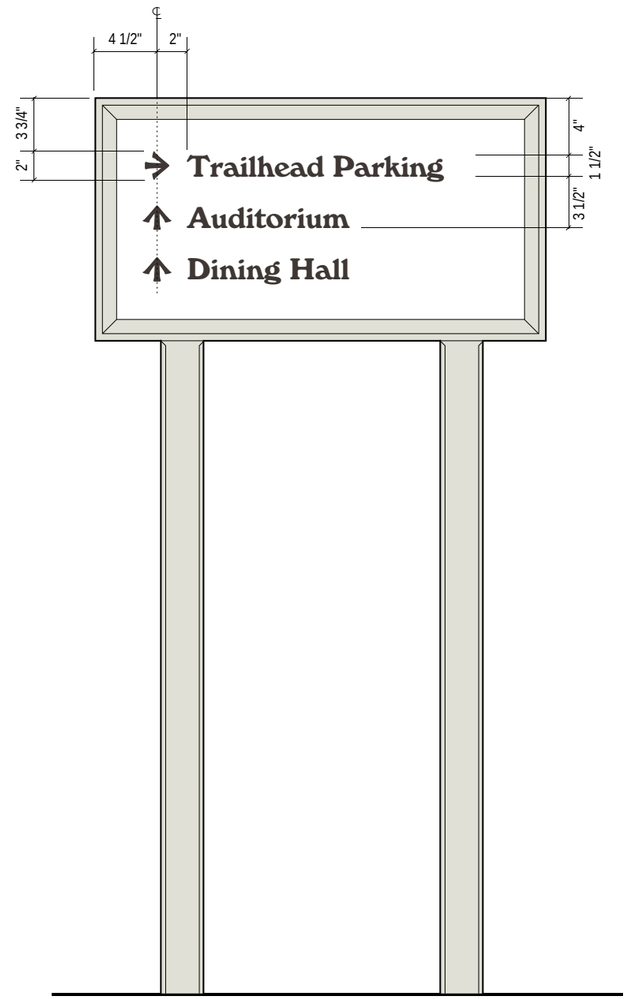

Wayfinding: Type V1 - Structure

Large vehicular directional signs are to be placed perpendicular to vehicular routes accessing four or more destinations.

1. 1" thick SignPly (or approved equal) Single-sided, painted aluminum over furniture grade exterior plywood core.
2. Galvanized wood screw.
3. Frame made from clear grain hardwood or cedar and finished smooth.
4. Clear grain cedar post. Top beveled and finished smooth.

NOTE:
All surfaces of sign frame/panel and post must be primed and painted prior to assembly to ensure complete weather seal.

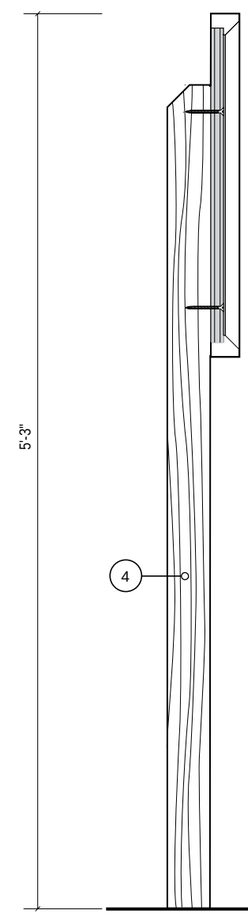

Section View

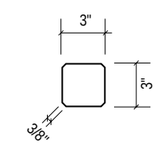

Post Section

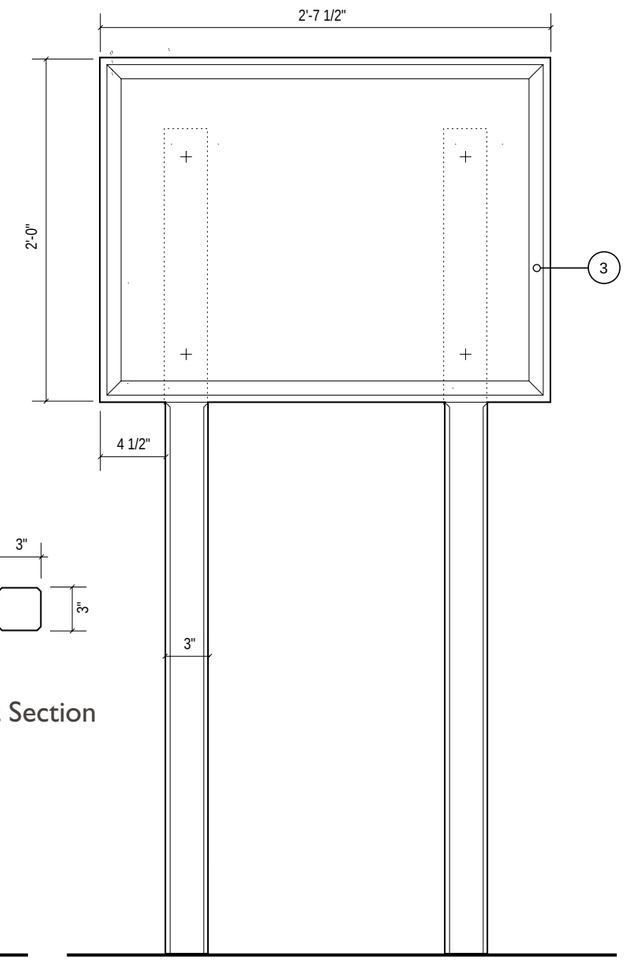

Front View

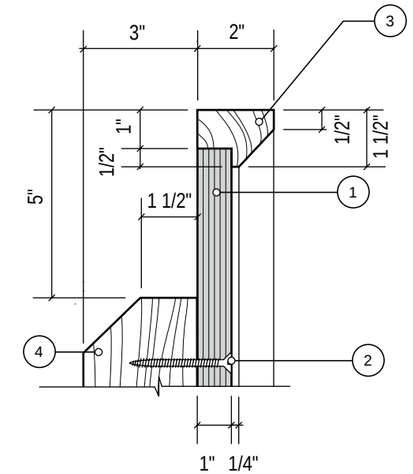

Detail View

Wayfinding: Type V2 - Structure

Small vehicular directional signs are to be placed perpendicular to vehicular routes accessing three or fewer destinations.

1. 1" thick SignPly (or approved equal) Single-sided, painted aluminum over furniture grade exterior plywood core.
2. Galvanized wood screw.
3. Frame made from clear grain hardwood or cedar and finished smooth.
4. Clear grain cedar post. Top beveled and finished smooth.

NOTE:
All surfaces of sign frame/panel and post must be primed and painted prior to assembly to ensure complete weather seal.

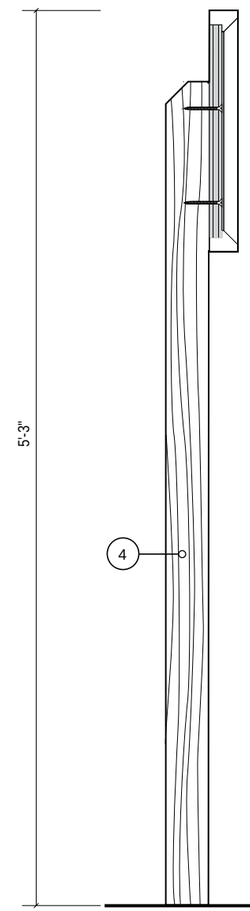

Section View

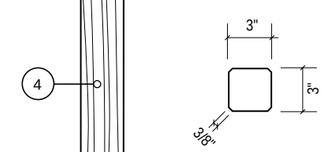

Post Section

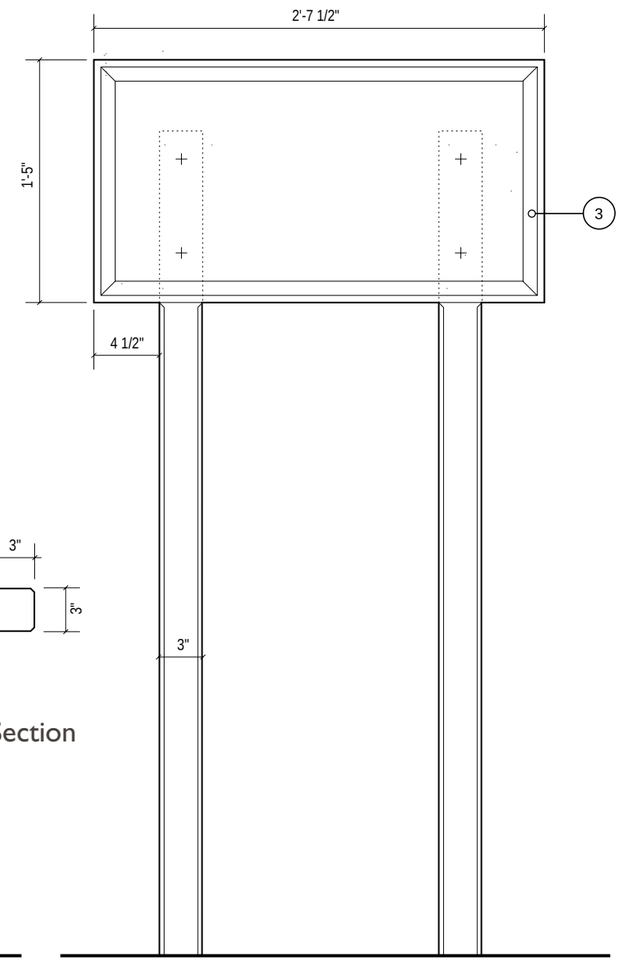

Front View

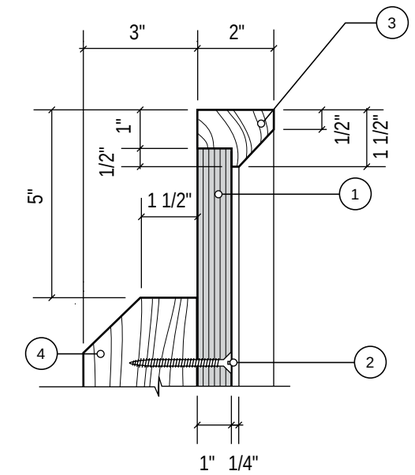

Detail View

Wayfinding: Type A - Graphic Layout

Identity signs may accommodate one or two line names.

1. Finished with exterior grade penetrating opaque stain to match CL 2933M Salsify.

2. Finished with exterior grade enamel to match CW057W White Solitude.

3. Matte Black A9090-O High Performance opaque vinyl (Avery), or black silk screen/print.

NOTE:

The decision to choose one fabrication method over the other for graphic information should be made considering sign size, durability needed/ desired, and risk of vandalism.

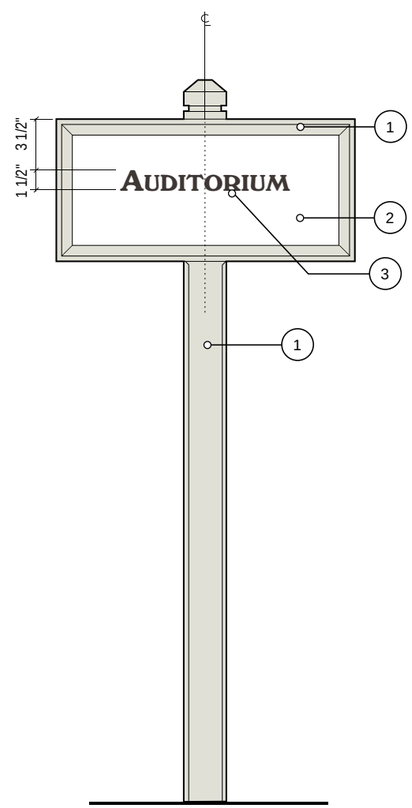

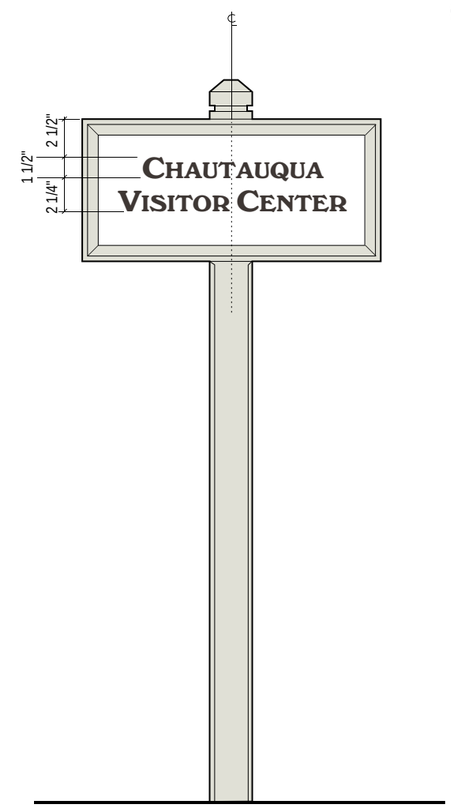

Wayfinding: Type A - Structure

Identity signs are placed parallel to the building or facility it represents.

1. 3/4'' thick SignPly (or approved equal) Single-sided, painted aluminum over furniture grade exterior plywood core.
2. Galvanized wood screw.
3. Frame made from clear grain hardwood or cedar and finished smooth.
4. Clear grain cedar post. Post cap routed and sawed from solid post material – not added as a separate component.

NOTE:
All surfaces of sign frame/panel and post must be primed and painted prior to assembly to ensure complete weather seal.

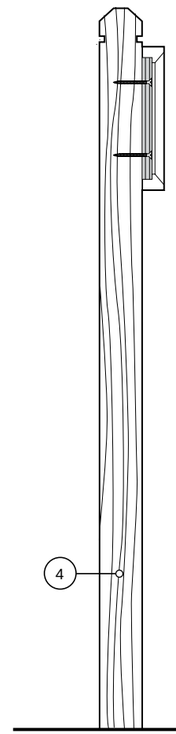

Section Detail

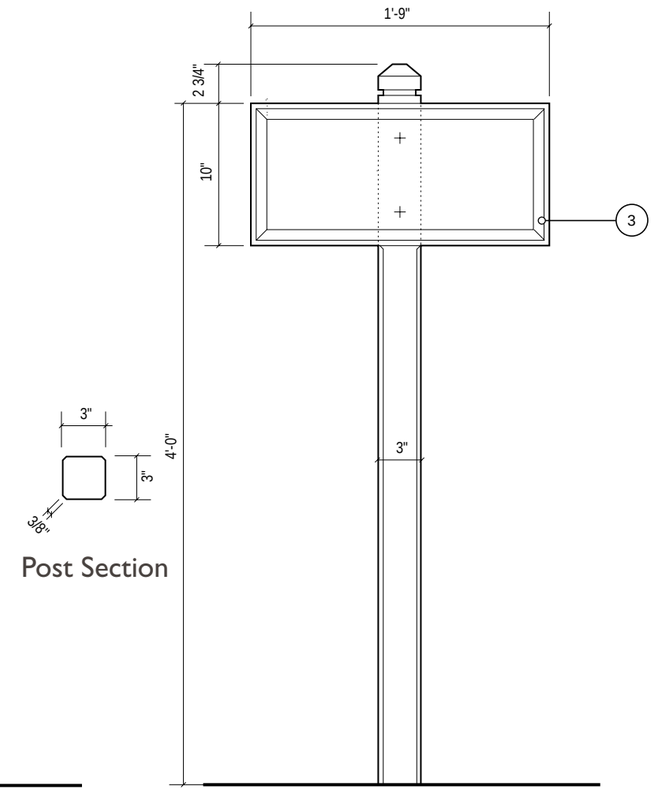

Post Section

Front View

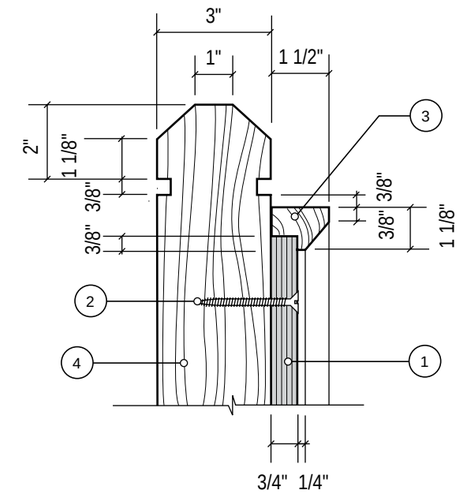

Detail View

Wayfinding: Type B - Graphic Layout

Area identity signs include two graphic formats– a two line identity and a single line identity. Both include accommodations for two lines of sub text.

1. Finished with exterior grade penetrating opaque stain to match 8644M Seal Beach.
2. Finished with exterior grade sign paint with smooth low-sheen finish, to match CL2933M Salsify.
3. Finished with exterior grade enamel to match CW057W White Solitude.
4. Matte Black A9090-O High Performance opaque vinyl (Avery), or black silk screen/print.

NOTE:

The decision to choose one fabrication method over the other for graphic information should be made considering sign size, durability needed/ desired, and risk of vandalism.

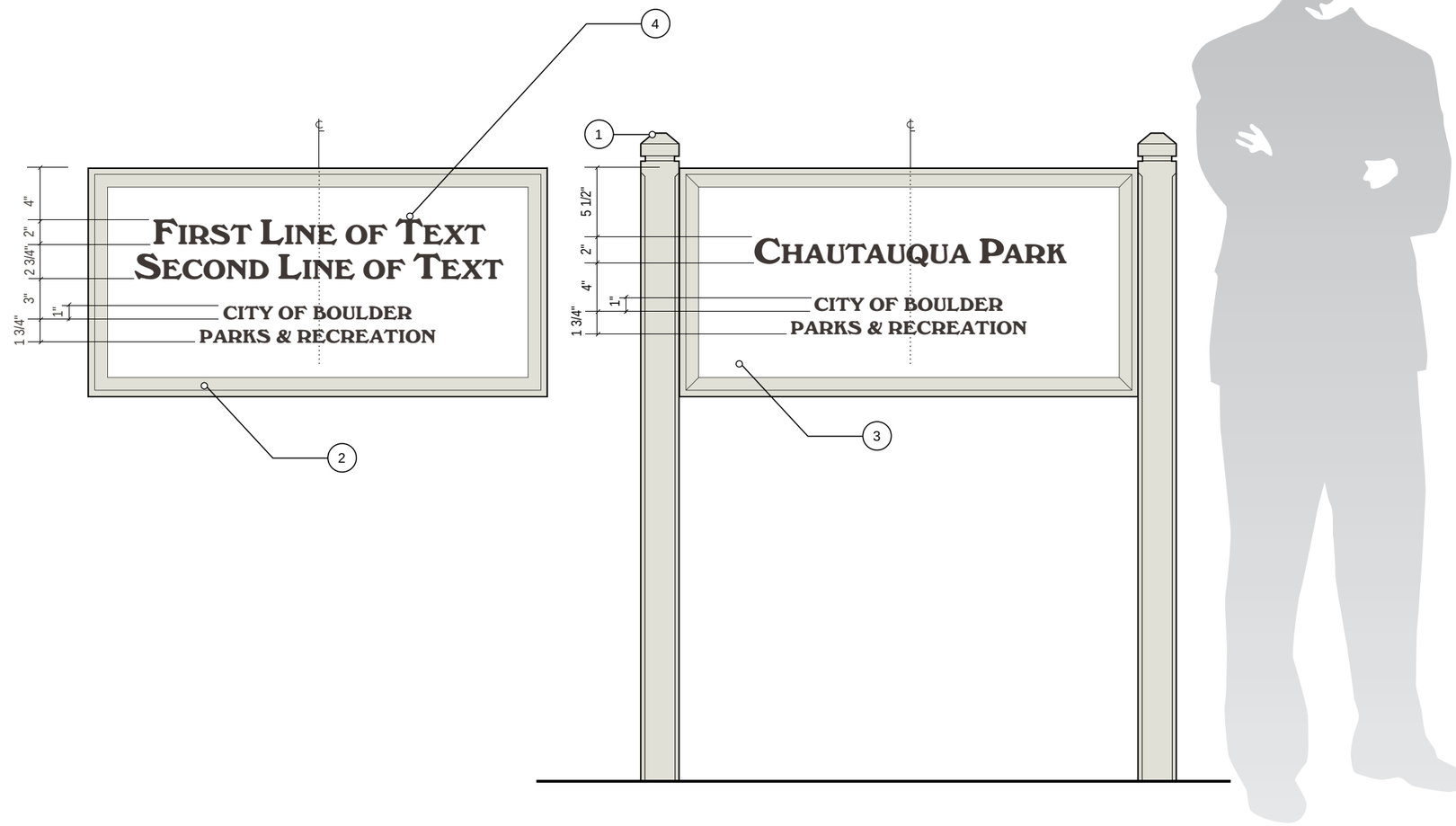

Wayfinding: Type B - Structure

Area identity signs are to be placed parallel to vehicular routes Preferably at or near pedestrian access entries.

1. 1/2" thick SignPly (or approved equal) Single-sided, painted aluminum over furniture grade exterior plywood core.
2. Stainless steel angle bracket with galvanized or stainless steel wood screw.
3. Frame made from clear grain hardwood or cedar and finished smooth.
4. Clear grain cedar post. Post cap routed and sawed from solid post material – not added as a separate component.

NOTES:

All surfaces of sign frame/panel and post must be primed and painted prior to assembly to ensure complete weather seal.

This sign type can be used for future needs currently unforeseen, and scaled proportionately up or down 20% to accommodate necessary messages.

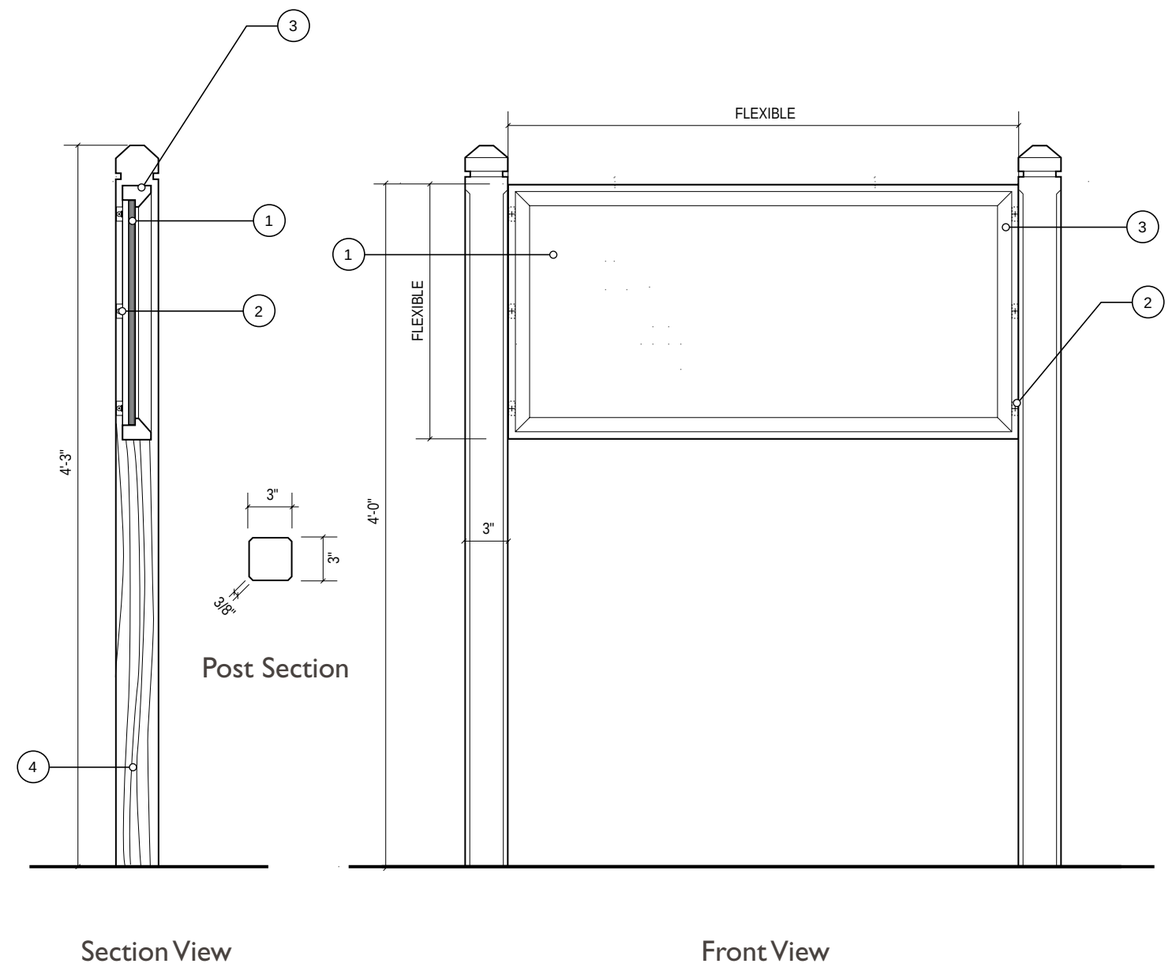

Wayfinding: Type D - Graphic Layout

The free standing directory maps include four map configurations, each representing a right-read orientation to assist the viewer in place navigation.

1. Finished with exterior grade penetrating opaque stain to match CL 2933M Salsify.

2. Porcelain enamel panel. Colors derived from project standard palette.

NOTE:
Fiberglass embedment digital output is acceptable to locations likely to require changes to the map graphic.

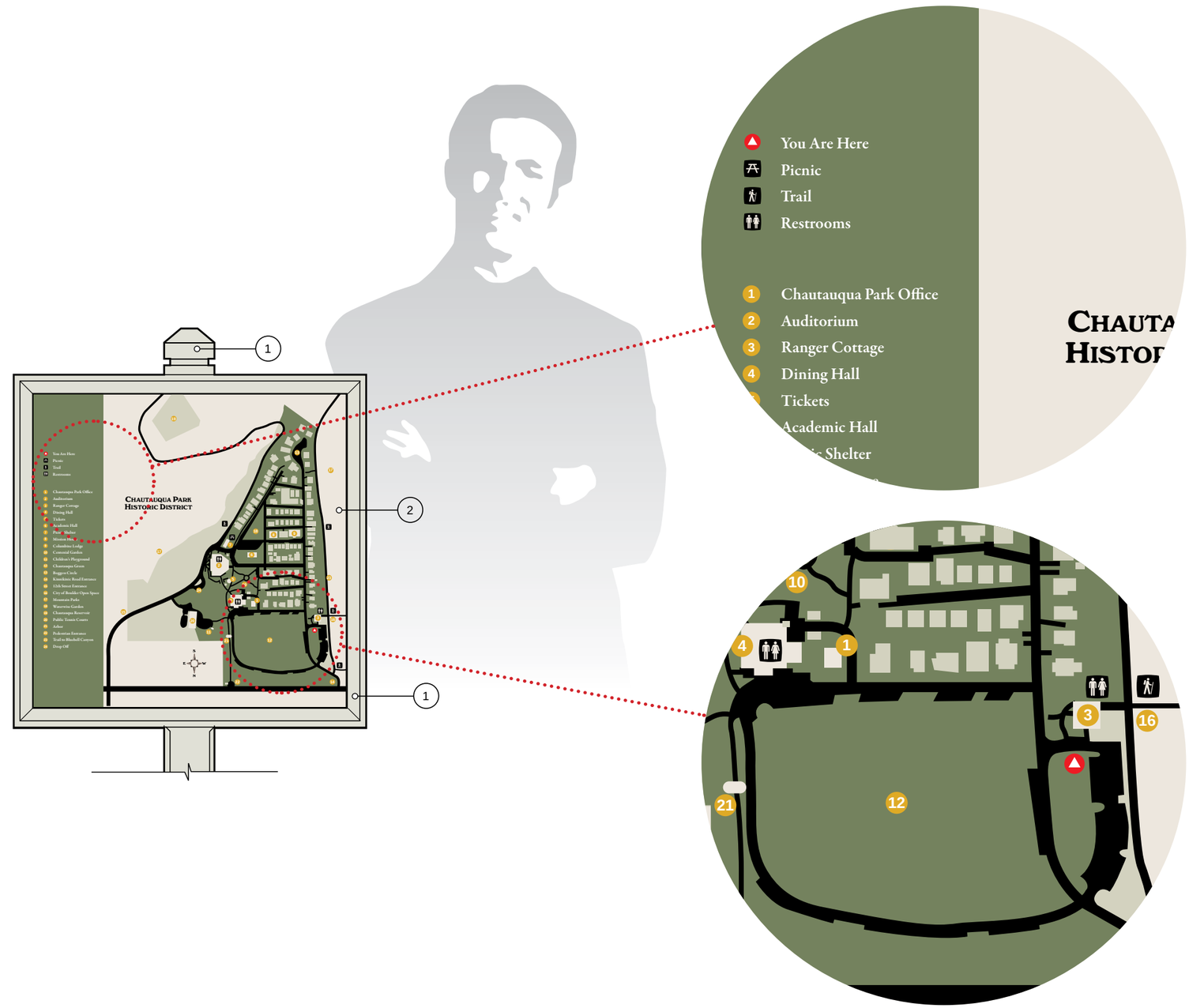

Wayfinding: Type D - Structure

Directory map signs are to be strategically placed in areas where visitors congregate or converge.

1. 3/4'' thick SignPly (or approved equal) Single-sided, painted aluminum over furniture grade exterior plywood core.
2. Galvanized wood screw.
3. Frame made from clear grain hardwood or cedar and finished smooth.
4. Clear grain cedar post. Post cap routed and sawed from solid post material – not added as a separate component.
5. Porcelain enamel or fiberglass embedded panel.

NOTE:

All surfaces of sign frame/panel and post must be primed and painted prior to assembly to ensure complete weather seal.

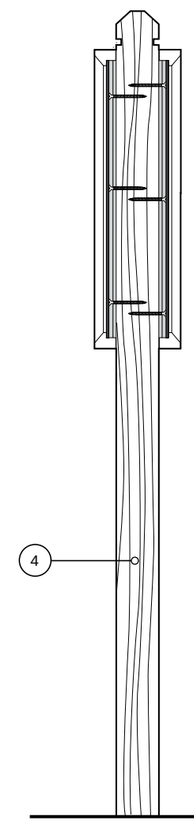

Section View

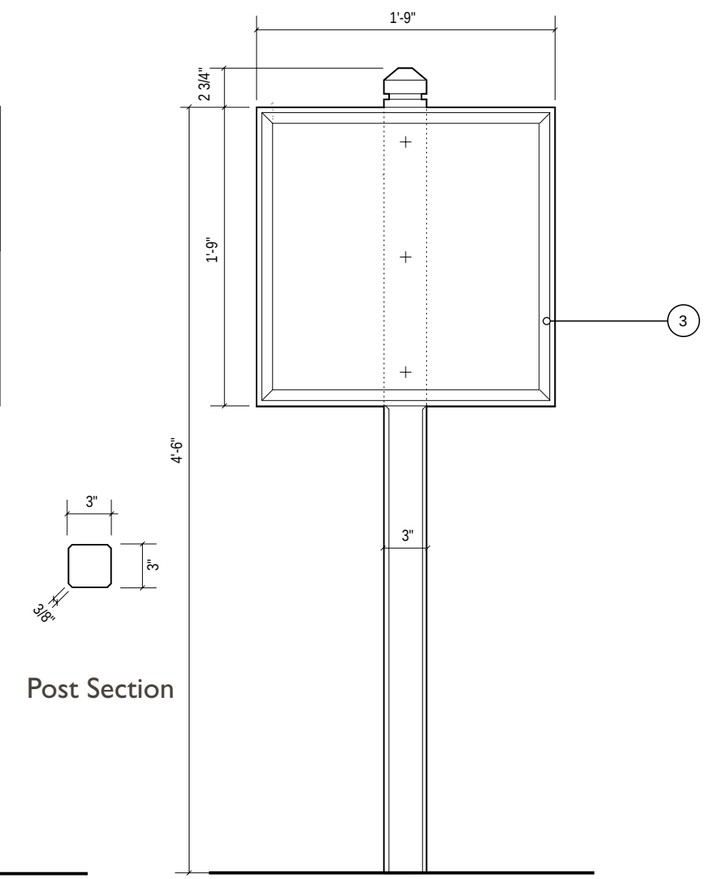

Post Section

Front View

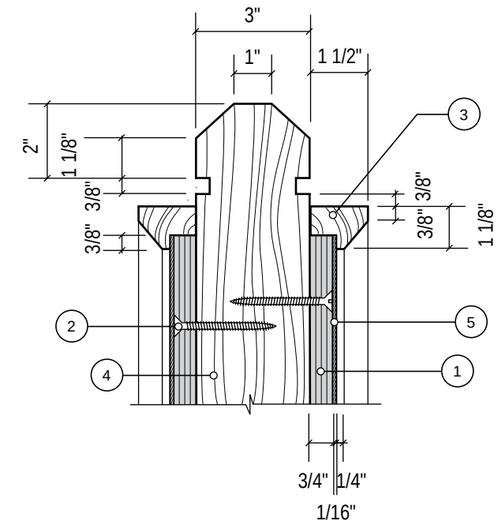

Detail View

Wayfinding: Type C - Graphic Layout

The changeable sign will accommodate two line items.

1. Finished with exterior grade penetrating opaque stain to match CL 2933M Salsify.
2. Finished with exterior grade enamel to match CW057W White Solitude.
3. Matte Black A9090-O High Performance opaque vinyl (Avery), or black silk screen/print.

NOTE:

The decision to choose one fabrication method over the other for graphic information should be made considering sign size, durability needed/ desired, and risk of vandalism.

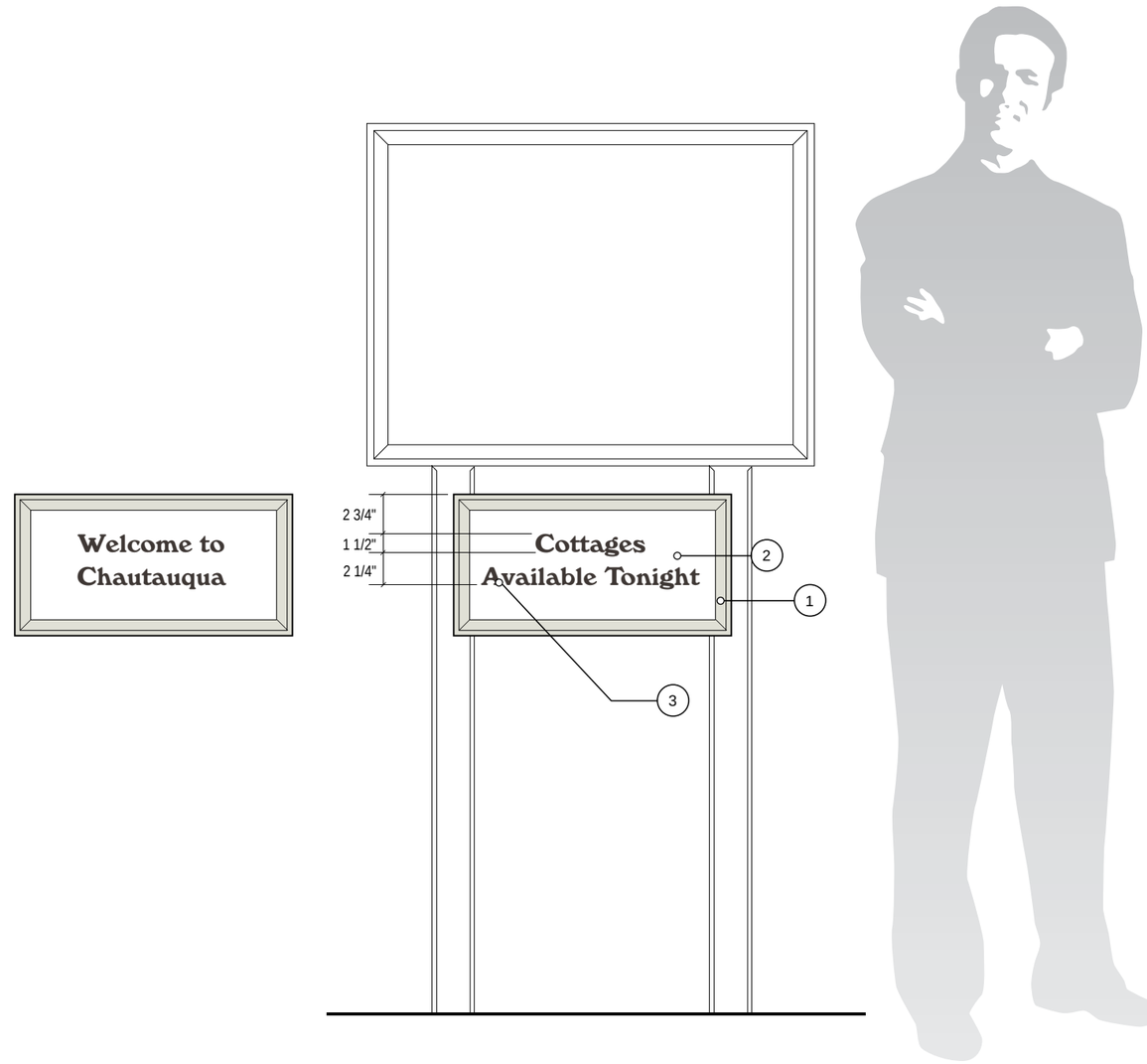

Wayfinding: Type C - Structure

Changeable signs will be mounted beneath directional sign panels and directly onto the support posts. The panel inserts are held in place by slotted grooves within the top and bottom frame edges. Panels receive a thumb slot visible only when panel has been slid upward.

1. 3/4" thick SignPly (or approved equal) Single-sided, painted aluminum over furniture grade exterior plywood core.
2. Galvanized wood screw.
3. Frame made from clear grain hardwood or cedar and finished smooth.
4. Clear grain cedar post. Post cap routed and sawed from solid post material – not added as a separate component.
5. 1/4" thick aluminum, primed and painted with exterior enamel to match CW057W White Solitude. Fits loose, but secure in grooved frame. Slide up and pull out to remove. Message on both sides of removable panel.

NOTE:
All surfaces of sign frame/panel and post must be primed and painted prior to assembly to ensure complete weather seal.

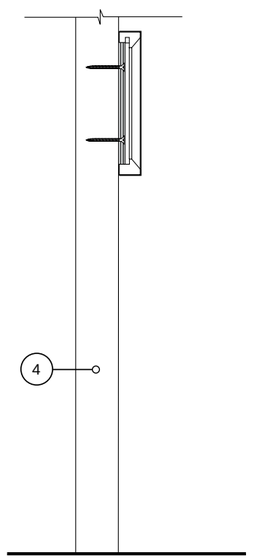

Section View

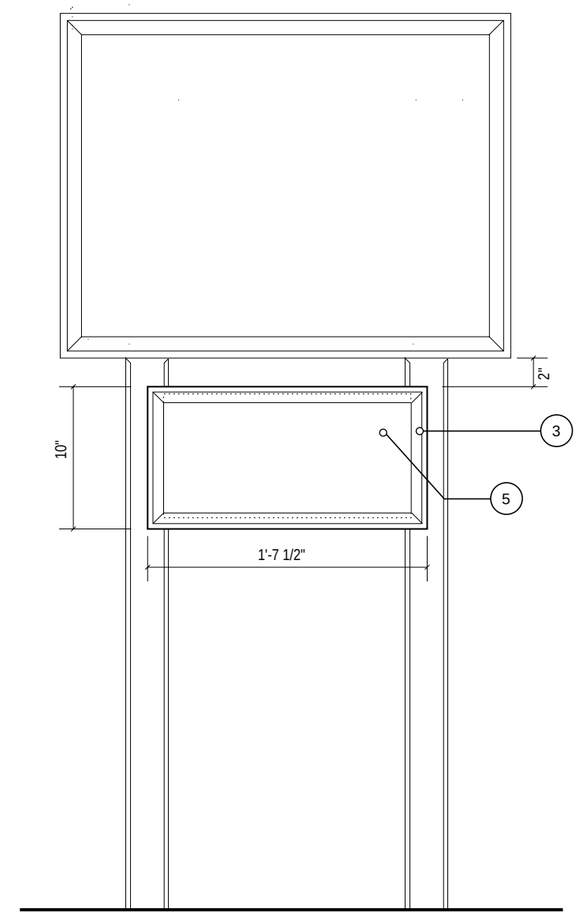

Front View

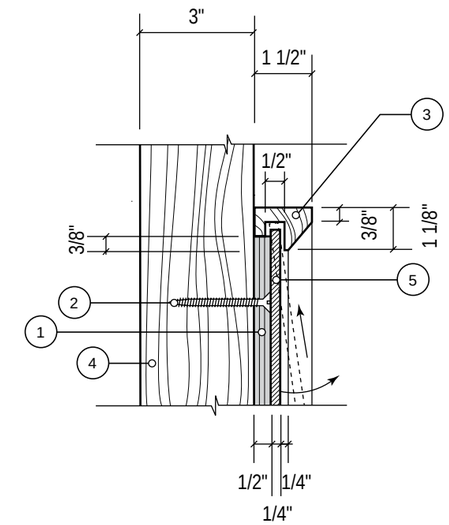

Detail View

Wayfinding: Installation

1. Post
2. Concrete to grade with positive top drainage angle
3. Gravel

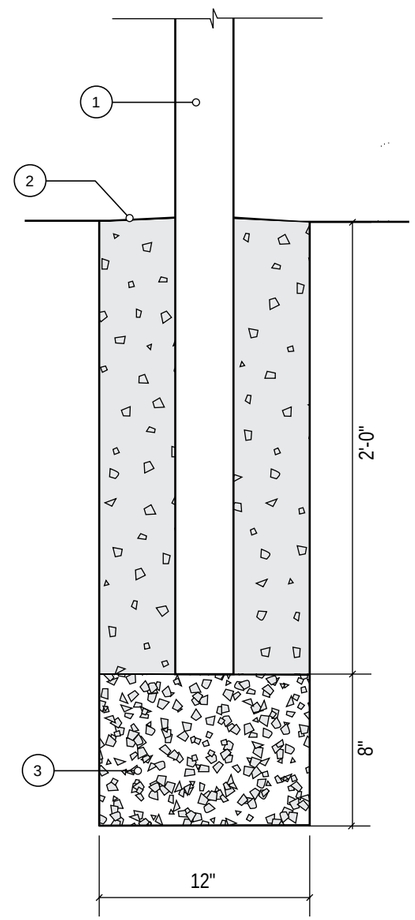

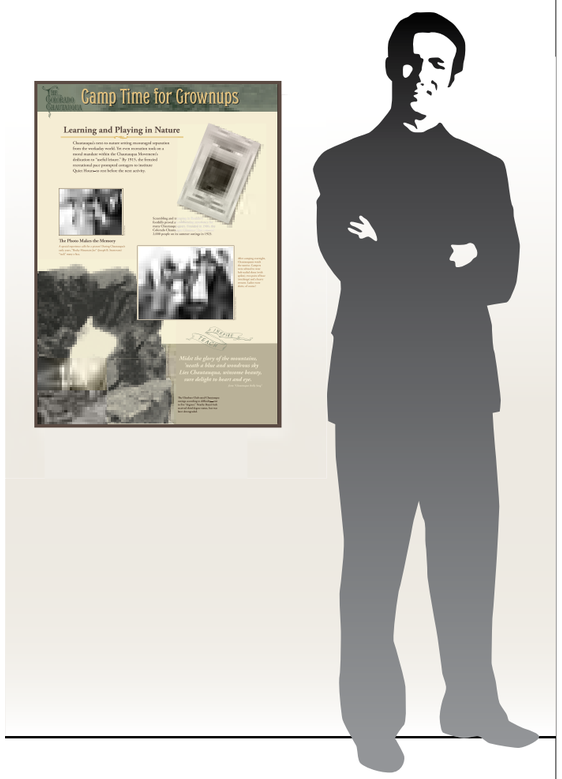

Introduction

The Colorado Chautauqua is a local treasure of national importance. It holds a unique place in history as one of the last chautauquas in continuous operation in the United States, and the only such site west of the Mississippi with its original structures intact. The site continues to draw hundreds of thousands of visitors each year, many of whom are unaware of Chautauqua's historic significance. Rather, they seek the amenities and programs offered today.

The interpretive program at Chautauqua serves to connect all visitors to the site's rich history and to an important chapter in American history, thereby building appreciation and support for the resource. While education is the primary purpose of interpretation, encouraging attitudes and behaviors that promote conservation and preservation is a strong secondary purpose.

Designs for the interpretive program draw from the typical styles of the historic period of significance (1898-1930), including illustration, type, and graphic treatment. However, best practices in today's interpretive methods are used for text writing, panel organization, universal access and fabrication. Samples are shown herein. Ornamentation is deliberate and judicious, and used to convey the character of Chautauqua's formative days and to create hierarchy of information, as well as visual richness. Colors draw from the primary public structures, and include additional accent hues as appropriate to the times. The goal is to convey central messages in an engaging way for today's visitors, while creating layouts that elicit the look and feel of the early Chautauqua days.

Design Challenges

There is no end to interesting stories to tell about Chautauqua, yet the manner and means of telling them must be done carefully, and in small numbers. Individuals and firms responsible for implementing the interpretive program must exercise restraint regarding both numbers of exhibits created, and density of information.

Exterior sloper panels allow for viewing of the structures and/or resources being interpreted. Porcelain enamel graphic panels are specified for this "permanent" application. While they are more expensive to produce, they provide a sophisticated high resolution full-color look, and are extremely durable in outdoor conditions. Temporary and event signage may be produced in faster turn-around and cost effective materials.

Interpretive signs and exhibits are to be located in strategic locations that add to, rather than detract from, Chautauqua's historic nature.

Note: Requirements of the Americans with Disabilities Act have been considered in specifications for the signs and graphics herein.

Interpretive: Color Palette

Colors selected for wayfinding signage were derived from those found in existing architecture and are specified using Kwal paint formulas.

Gradations of these colors are permissible.

All process and blends are to match physical paint samples as closely as possible, not specifications.

NOTE: *Colors show on this page are for representation only. Actual colors will differ due to output limitations.*

Sample	Kwal Paint Match	Pantone Closest Match
	CL 2933M - Salsify	413
	CL 2725D - Dissent	465
	8673M - Tavern Taupe	7535
	CW055W - Honeywind	413
	7735D - Topaz	7405
	8644M - Seal Beach	7538
	Black	100% Process
	CW057W - White Solitude	N/A

Interpretive: Fonts - Style

1. **Gable Antique Condensed**
   Main Panel Titles
2. **Adobe Garamond Pro Bold**
   Headers: Primary Text, Secondary Text, and Caption
3. **Adobe Garamond Pro Bold Italic**
   Quotations, Poetry, Lyrics
4. **Adobe Garamond Pro Semibold**
   Body and Caption Copy
5. **Adobe Garamond Pro Semibold Italic**
   Image Credits

The Colorado Chautauqua Association,
Boulder, Colorado.
Platform Contract.

1909 use of type nearly identical to Gable Antique Condensed

1 ABCDEFGHIJKLMNOPQRSTVWXYZ
abcdefghijklmnopqrstvwxyz

2 ABCDEFGHIJKLMNOPQRSTVWXYZ
abcdefghijklmnopqrstvwxyz

3 *ABCDEFGHIJKLMNOPQRSTVWXYZ*
abcdefghijklmnopqrstvwxyz

4 ABCDEFGHIJKLMNOPQRSTVWXYZ
abcdefghijklmnopqrstvwxyz

5 *ABCDEFGHIJKLMNOPQRSTVWXYZ*
abcdefghijklmnopqrstvwxyz

Interpretive: Fonts - Size

1. **Main Panel Title**
   Gable Antique Condensed 160 pt.
   Customized with a stepped drop shadow.
2. **Primary Header**
   Adobe Garamond Pro Bold 65 pt.
3. **Secondary Header**
   Adobe Garamond Pro Bold 41 pt.
4. **Caption Header**
   Adobe Garamond Pro Bold 33 pt.
5. **Primary Text**
   Adobe Garamond Pro Semibold 30 pt.
6. **Secondary Text**
   Adobe Garamond Pro Semibold 24 pt.
7. **Caption Text**
   Adobe Garamond Pro Semibold 20 pt.
8. **Quotation**
   Adobe Garamond Pro Bold Italic 42 pt.
9. **Quotation Source**
   Adobe Garamond Pro Semibold Italic 20 pt.
10. **Photo Credit/Source**
    Adobe Garamond Pro Semibold 8 pt.

NOTES:

Point size shown here is accurate only when this document is printed or viewed at tabloid size (11" x 17") at 100%.

Gable Antique Condensed as shown here and on the previous page has a few modifications. Serifs descending below the baseline have been modified in these forms: Uppercase F, H, K, M, N, R and lowercase p and q.

1 **The Most**

2 **Uplifts**

3 **Tabernacle of Learning**

4 **Entertainment as Enlightenment**

5 When the "Texas-Colorado Chautauqua"

6 Commitment to self-improvement

7 Easy access to nature and the mountains

8 ***Midst the glory***

9 from "Chautauqua Rally Song"

10 Photo Courtesy of

Interpretive: Photography

Black and white historic photos will serve as the primary graphic elements for interpretive panels. The archives stored and managed by the Colorado Chautauqua Association are a treasury of high quality images that can serve nearly all the essential messages for the site. Other local resources for historic photos include Boulder's Carnegie Branch Library for Local History and the Archives at the University of Colorado Libraries.

1. **Titles**
   Where existing, handwritten information on original photographs will be displayed.

2. **Tone of Photographs**
   B & W and color original photographs shall be scanned as color CMYK files to show warmth of original prints.

3. **Rules**
   Photographs shall generally include a 2-point rule around their perimeter at .125" from photo edge. Rule color may vary within the acceptable palette.

4. **Clipping Paths**
   For variety and interest of large photographic images, photos may be clipped at logical and appropriate breaks. Clipping must be VERY carefully completed with 1-2 pixel feathering to soften edges. (Note red line indicated in lower figurer shows location of break, not decorative element).

1 2

3

4

Interpretive: Illustration

Illustration style shall use continuous solid tone in early 20th century "poster" style. Duo-tone and multi-tone are acceptable, depending on existing source materials. Gradations within the illustration are to be avoided. Color originals should be placed as such.

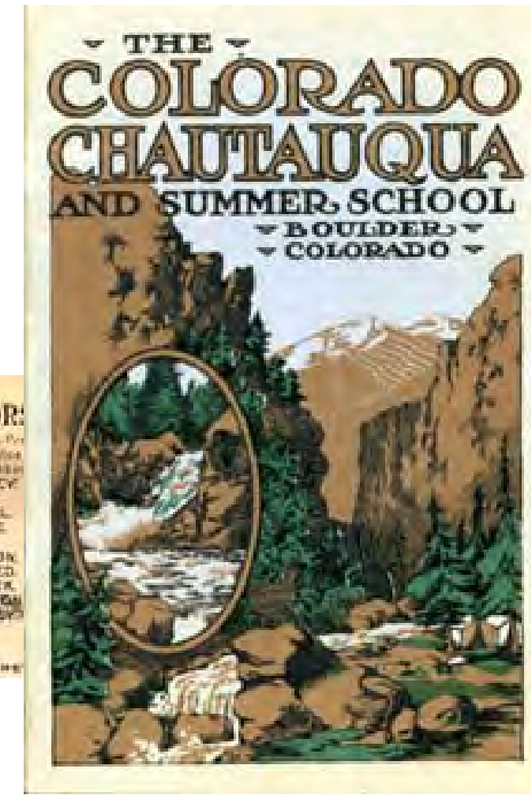

Interpretive: Flourishes, Rules, and Dingbats

Design elements are to be derived from historic references. Simpler forms are preferred over highly ornamental designs.

Use is to be limited primarily to key elements, such as primary headers.

If artifact images are used on a particular panel, elements may tie directly to these references.

Overview
Interpretive writing is an art that involves using language precisely to engage visitors and convey key messages quickly. This is prose as story telling. Reading interpretive writing should be enjoyable for visitors. Such writing should include information that helps visitors connect to the resource as well as to their own lives.

Writing Guidelines
- In general, use short words, sentences, and paragraphs.
- Vary sentence length and structure.
- Use active verb forms wherever possible.
- Use "colorful" descriptors.
- Avoid highly technical terms, as well as slang or overly casual constructions (except where these are integral to the content).

Once text has been written, then edit, edit, edit. Brevity and simplicity are always key to successful interpretive writing. Readership always trumps elegance.

Text Layout Guidelines
How interpretive text is presented on the page carries equal importance to its content. Layout can determine whether text gets read and understood. These guidelines are intended to help visitors engage easily with the printed word.

- Use different type styles and sizes to cue the reader about where to begin, and to communicate the most essential elements.
- Avoid hyphenation.
- Take care with line length and wraps; avoid widows.
- Do not exceed 55 characters in a line of text, regardless of font size or panel width.
- View blocks of copy as graphic elements, to be grouped on the panel in harmonious balance with other elements.

Design and Installation Considerations
Exhibits are generally viewed while visitors are standing, except in the case of visitors using wheelchairs. For most of us, looking down is easier down than up, as the head and eyes naturally incline downward. Therefore, care should be taken regarding where content sits above the floor on panels. In general, panel content (excluding large headers and graphics) should not exceed 66" above the floor at the viewing location.

Note: These guidelines do not discuss storyline and message development. These essential steps must occur before the process of text development.

Interpretive: Sign Types

Interpretive signs at the site may be free-standing or mounted to existing or future structures.

Type E1
Sloper panel: large, free-standing

Type E2
Sloper panel: small, free-standing

Type E3
Sloper panel: large, wall mount

Type E4
Sloper panel: small, wall mount

Type E5
Flush wall mount: Vertical Panel

Type E6
Flush wall mount: Horizontal Panel

Type E7, E8, E9, E10
Tour Locator, free-standing and adaptations to sign structures.

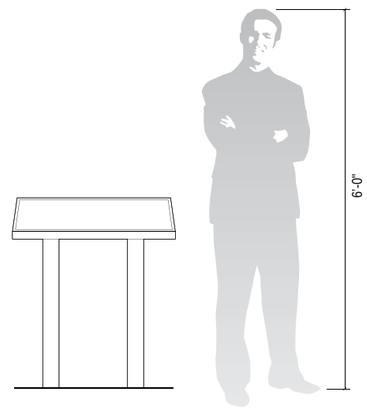

Type E1

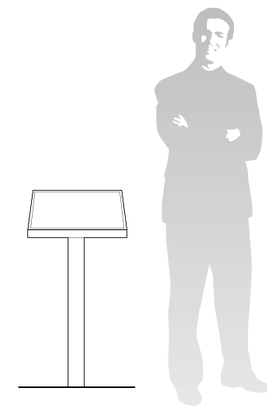

Type E2

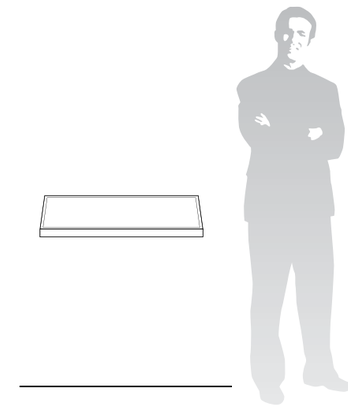

Type E3

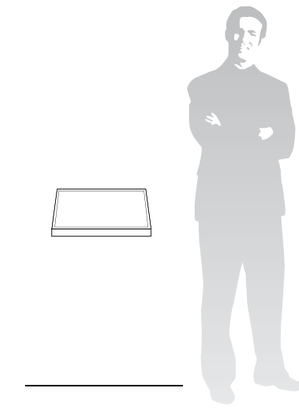

Type E4

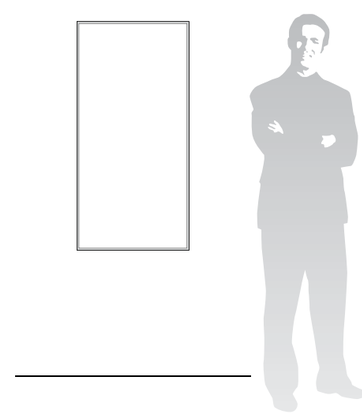

Type E5

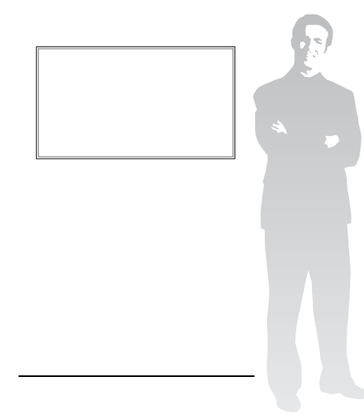

Type E6

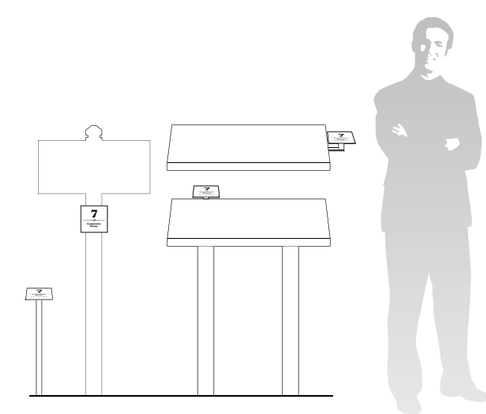

Types E7, E8, E9, E10

Interpretive: Sloper - Typographic Sizing

Fonts and Sizes:

1. **Main Panel Title**
   Gable Antique Condensed 160 pt.
   Customized with a stepped drop shadow.

2. **Primary Header**
   Adobe Garamond Pro Bold 65 pt.

3. **Secondary Header**
   Adobe Garamond Pro Bold 41 pt.

4. **Caption Header**
   Adobe Garamond Pro Bold 33 pt.

5. **Primary Text**
   Adobe Garamond Pro Semibold 30/40 pt.

6. **Secondary Text**
   Adobe Garamond Pro Semibold 24/28 pt.

7. **Caption Text**
   Adobe Garamond Pro Semibold 20/25 pt.

8. **Photo Credit/Source**
   Adobe Garamond Pro Semibold 8 pt.

Interpretive: Sloper - Design Elements

1. Primary title header and copy to be on panel, harkening to early 20th century print style.

2. Logo and Flatirons lithograph image from 1909 letterhead works as background to panel title. Illustration and masthead bar draw from colors on historic Chautauqua buildings: 8644M (Seal Beach). Panel color below calls on CW055W (Honeywind). *Note: Adobe Illustrator art delivered as electronic file with Master Signage Plan.*

3. Panel title text is a screened version of 7735D (Topaz) with a black drop-shadow rule.

4. Vary size and configuration of photography across panels to include both large (feature) images and smaller (detail) images.

5. Rules and dingbats are permitted when used in traditional style; however, elements should be used only modestly and to create hierarchy of content.

6. Where appropriate, background illustrations may strengthen panel content. Illustrations to be from historic print collateral artwork or newly commissioned work in this style.

7. Historic photography shown in a rectilinear fashion will always be square to panel and include a 2-point rule .125" from photo edge.

8. When possible, photo representations of historically relevant printwork should be used as "artifacts." Showing such artifacts at an angle can enhance variety. Text accompanying artifacts can justify to angle, where appropriate.

9. Second background color on panel can be used to accentuate or isolate content.

Note: This sample layout serves to illustrate the guidelines; it is not intended as a template.

Interpretive: Sloper - Message Length

Messaging is designed to provide varying levels of information that match the user's interest. A clearly defined hierarchy encourages visitor engagement and helps direct readers through the intended flow of content.

1. 3 Second Message
   Panel title uses short and well-crafted copy to convey "big-picture" take away.

   Copy Length - Up to 6 words

2. 30 Second Message
   Primary header and text are constructed to convey the overall message of the panel.

   Copy Length
   Text - Up to 45 words

3. 3 Minute Message
   In-depth information for a more specialized read. Secondary storylines further enhance overall messaging.

   Copy Length
   Secondary Text - Up to 45 words
   Caption Text - Up to 25 words

Interpretive: Type E1 - Structure

1. Painted 1/4" thick aluminum plate welded to post
2. Security hardware
3. 1" thick all-weather backer panel
4. Painted 1/2" face x 1 1/2" side aluminum frame with security hardware, painted to match CL2725D Dissent
5. Painted aluminum 3" x 3" post, direct burial or as over-sleave depending on mounting condition, painted to match CL2725D Dissent
6. Porcelain enamel graphic

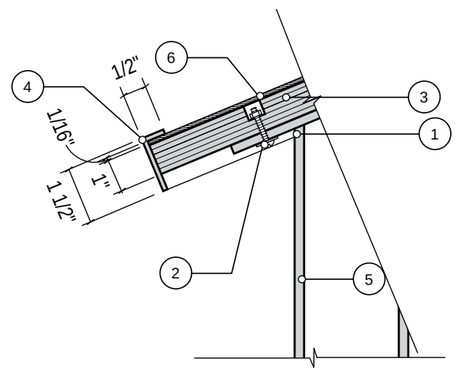

Detail View

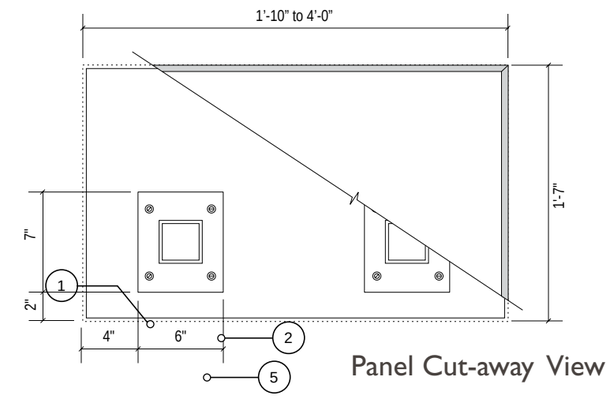

Panel Cut-away View

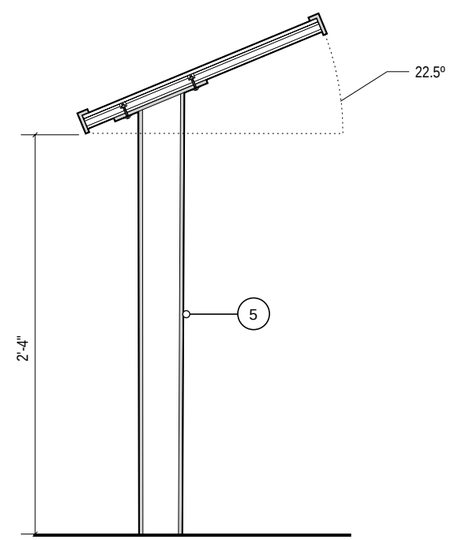

Section View

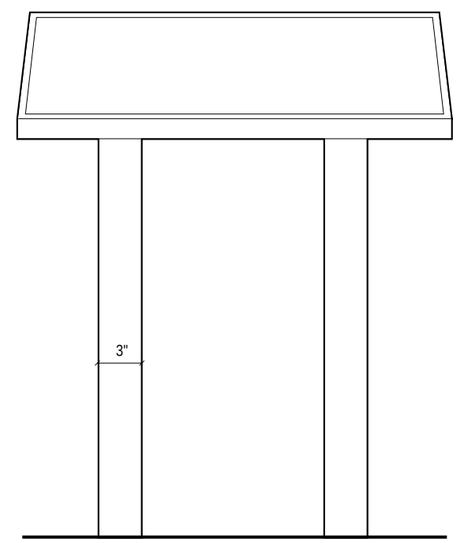

Front View

Interpretive: Type E2 - Structure

1. Painted 1/4" thick aluminum plate welded to post
2. Security hardware
3. 1" thick all-weather backer panel
4. Painted 1/2" face x 1 1/2" side aluminum frame with security hardware, painted to match CL2725D Dissent
5. Painted aluminum 3" x 3" post, direct burial or as over-sleave depending on mounting condition, painted to match CL2725D Dissent
6. Porcelain enamel graphic

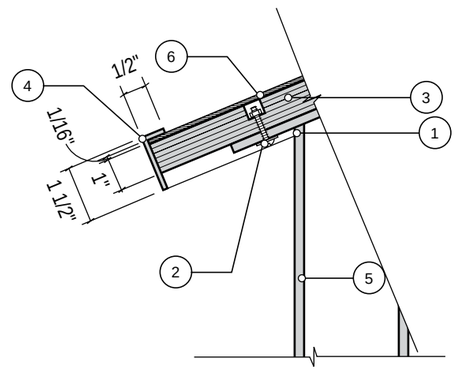

Detail View

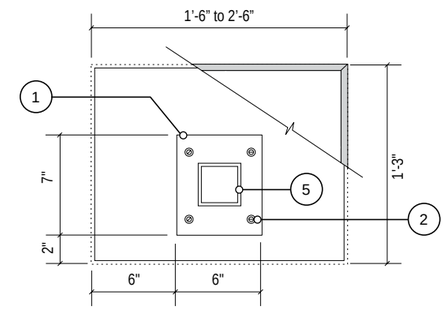

Panel Cut-away View

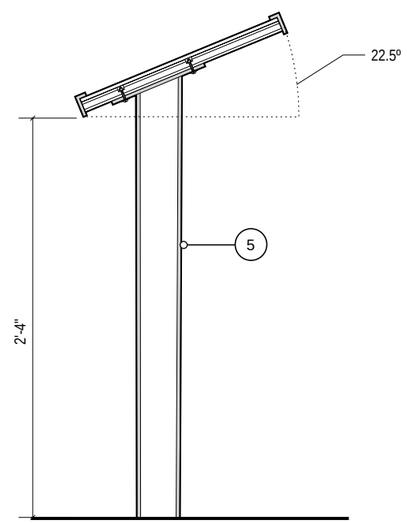

Section View

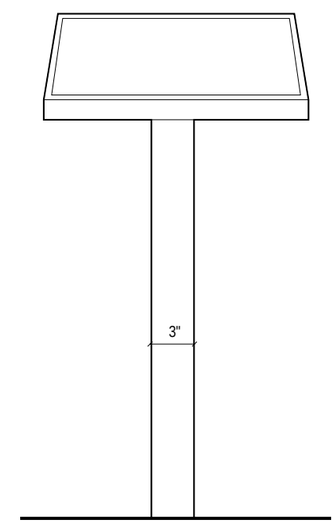

Front View

Interpretive: Type E3 - Structure

1. Painted aluminum 1" x 1" welded frame system, painted to match CL2725D Dissent
2. Security hardware
3. 1" thick all-weather backer panel
4. Painted 1/2" face x 1 1/2" side aluminum frame with security hardware, painted to match CL2725D Dissent
5. Galvanized lag or bolt connection, painted cap to match frame
6. Porcelain enamel graphic

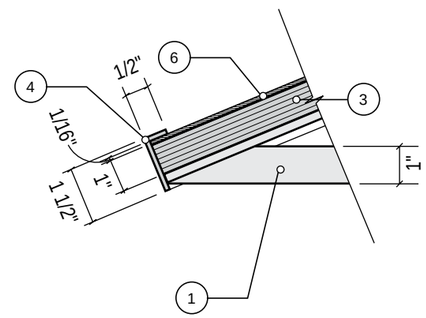

Detail View

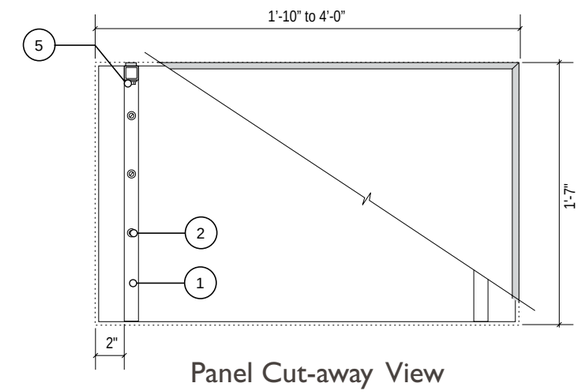

Panel Cut-away View

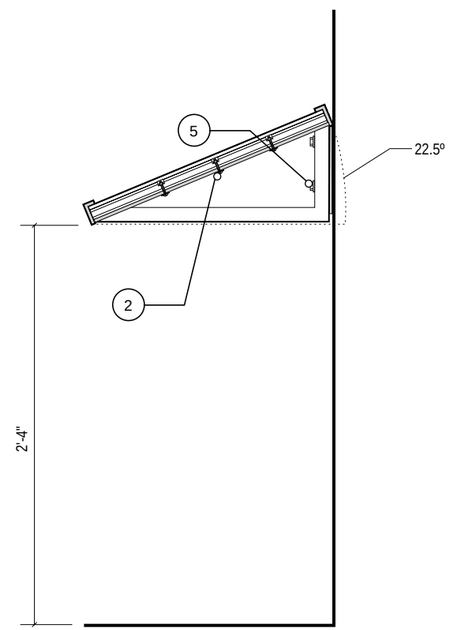

Section View

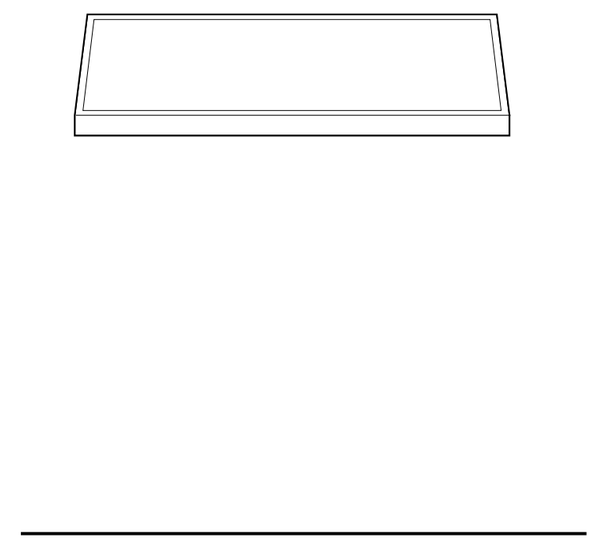

Front View

Interpretive: Type E4 - Structure

1. Painted aluminum 1" x 1" welded frame system, painted to match CL2725D Dissent
2. Security hardware
3. 1" thick all-weather backer panel
4. Painted 1/2" face x 1 1/2" side aluminum frame with security hardware, painted to match CL2725D Dissent
5. Galvanized lag or bolt connection, painted cap to match frame
6. Porcelain enamel graphic

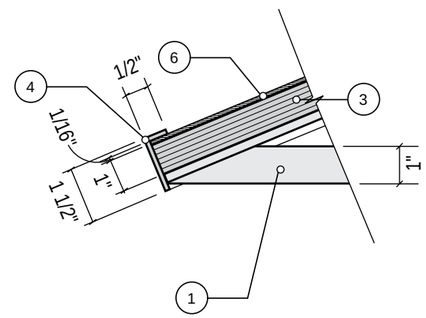

Detail View

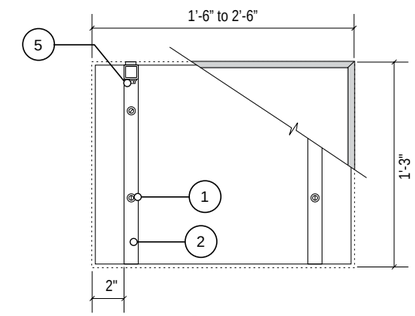

Panel Cut-away View

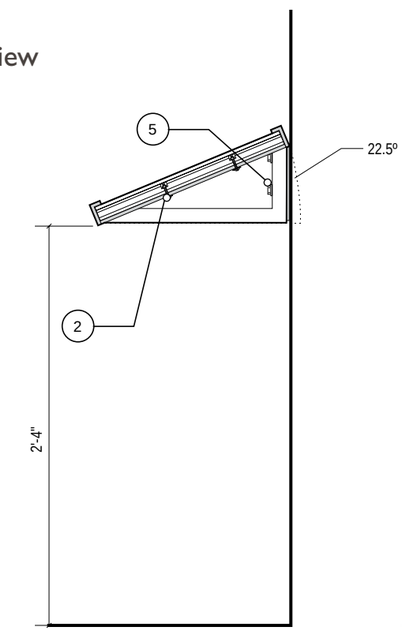

Section View

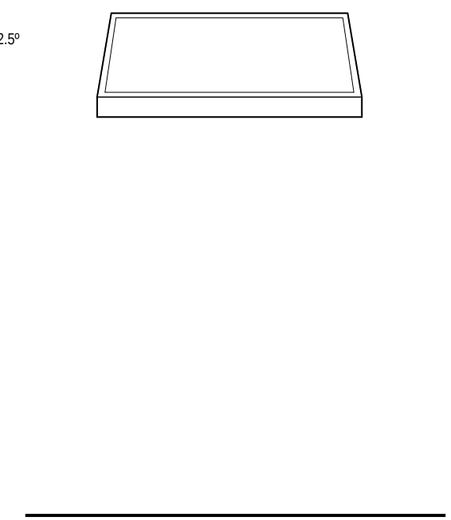

Front View

Interpretive: Types E5 and E6 - Type Sizing

Fonts and Sizes:

1. **Main Panel Title**
   Gable Antique Condensed 160 pt.
   Customized with a stepped drop shadow.

2. **Primary Header**
   Adobe Garamond Pro Bold 65 pt.

3 **Caption Header**
   Adobe Garamond Pro Bold 33 pt.

4. **Primary Text**
   Adobe Garamond Pro Semibold 30/40 pt.

5. **Secondary Text**
   Adobe Garamond Pro Semibold 24/28 pt.

6. **Caption Text**
   Adobe Garamond Pro Semibold 20/25 pt.

7. **Quotation**
   Adobe Garamond Pro Bold Italic 42 pt.

8. **Quotation Source**
   Adobe Garamond Pro Semibold Italic 20 pt.

9. **Photo Credit/Source**
   Adobe Garamond Pro Semibold 8 pt.

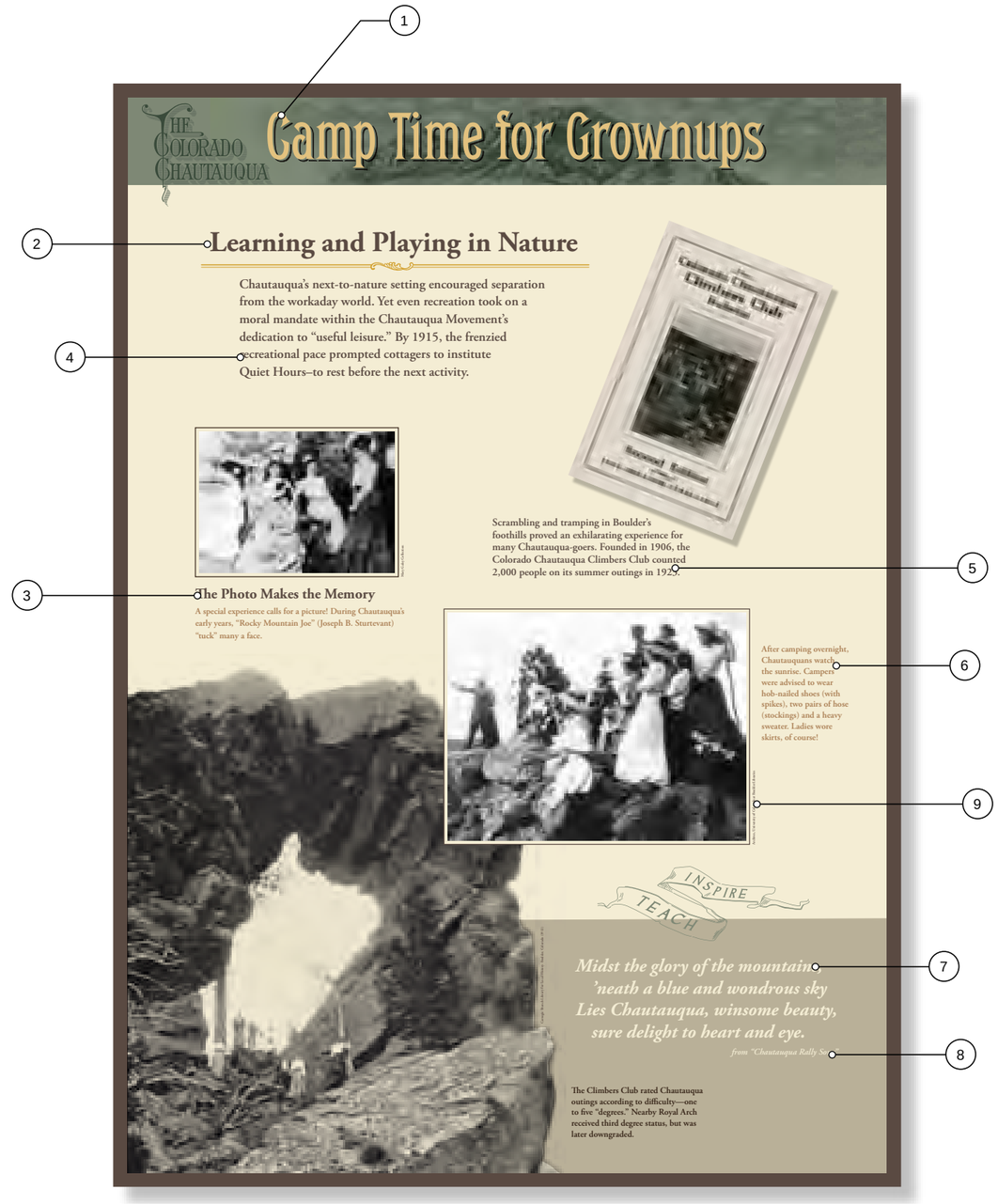

Interpretive: Types E5 and E6 - Design

1. Use of drop shadows is limited to images used as "artifact" objects, thereby creating a distinction and hierarchy of elements.
2. 1/2" face-profile metal frame on edges adds visual containment to panels.
3. Quotations and excerpts can be drawn from historic sources to provide quick read delivery of major ideas and/or to engage the visitor.
4. Clipped or cutout historical photographs can be used as major anchoring elements.
5. Ornamental graphics taken from period print material may be used to support the panel's historical aesthetic and/or to place emphasis on certain content.

NOTE:

This sample layout serves to illustrate the guidelines; it is not intended as a template.

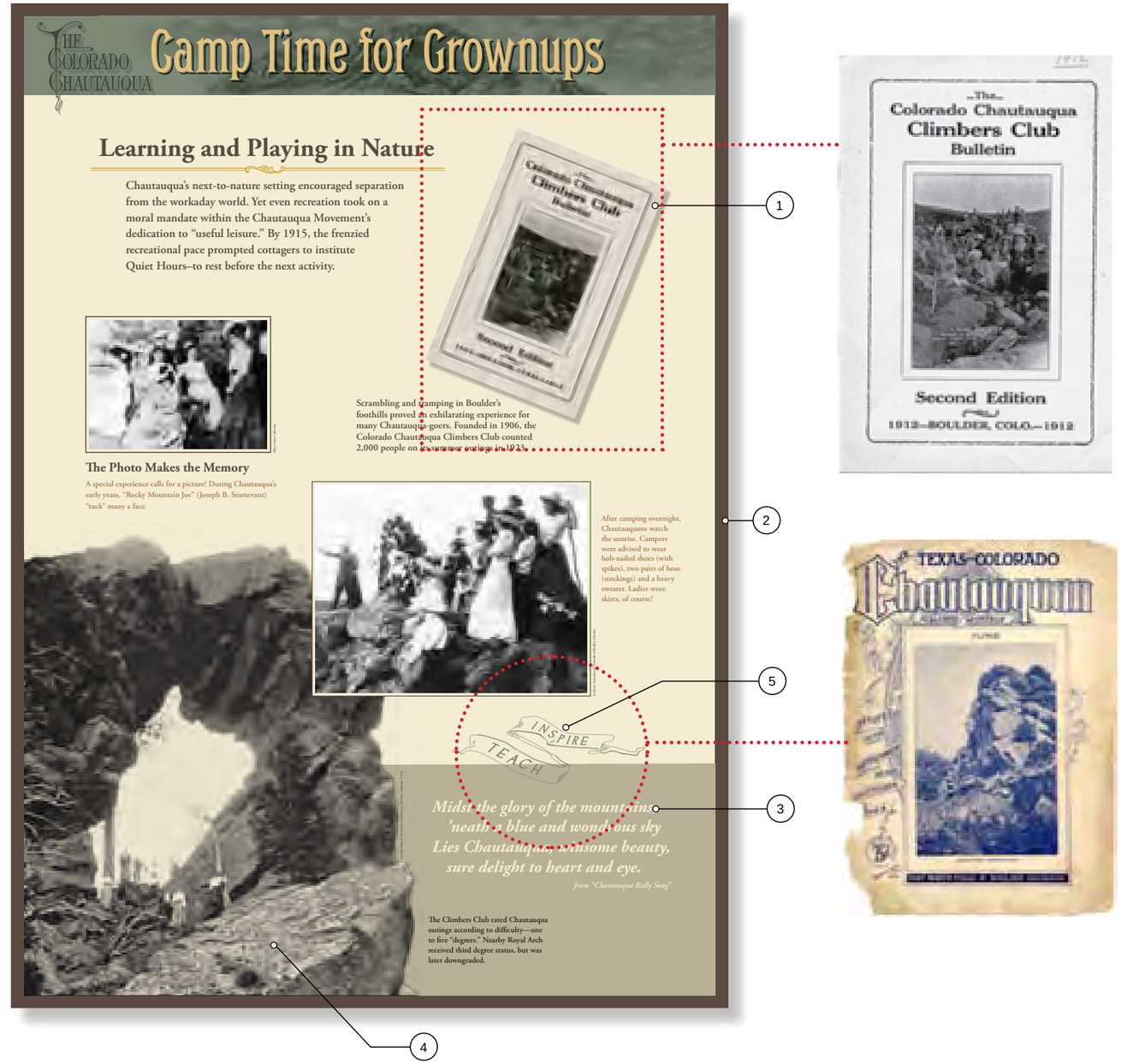

Interpretive: Types E5 and E6 - Messaging

Messaging is designed to provide varying levels of information that match the user's interest. A clearly defined hierarchy encourages visitor engagement and helps direct readers through the intended flow of content.

1. 3 Second Message
   Panel title uses short and well-crafted copy to convey "big-picture" take away.

   Copy Length - Up to 6 words

2. 30 Second Message
   Primary header and text are constructed to convey the overall message of the panel.

   Copy Length
   Text - Up to 45 words

3. 3 Minute Message
   In-depth information for a more specialized read. Secondary storylines further enhance overall messaging.

   Copy Length
   Secondary Text - Up to 45 words
   Caption Text - Up to 25 words

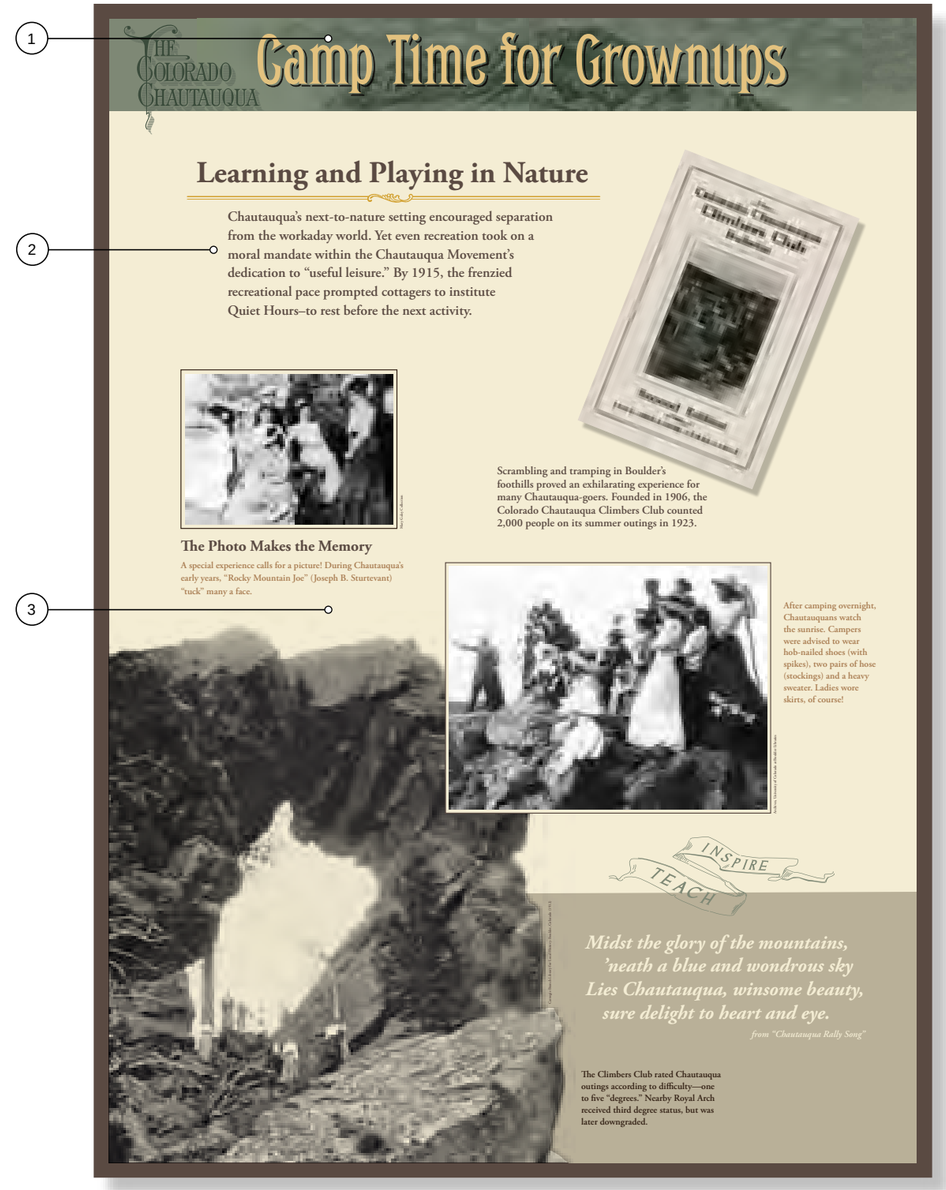

Interpretive: Type E5 - Structure

1. Attachment hardware, style depends on substrate
2. 1" thick all-weather backer panel
3. Painted 1/2" face x 1 1/2" side aluminum frame with security hardware
4. Low-profile "Z" cleat
5. 4-color fiberglass embed digital exterior graphic

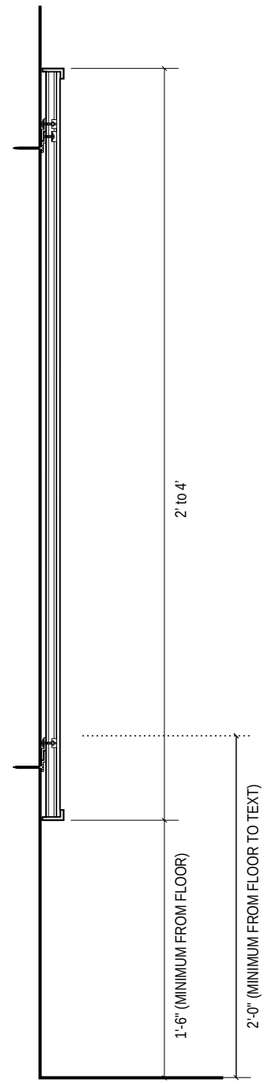

Section View

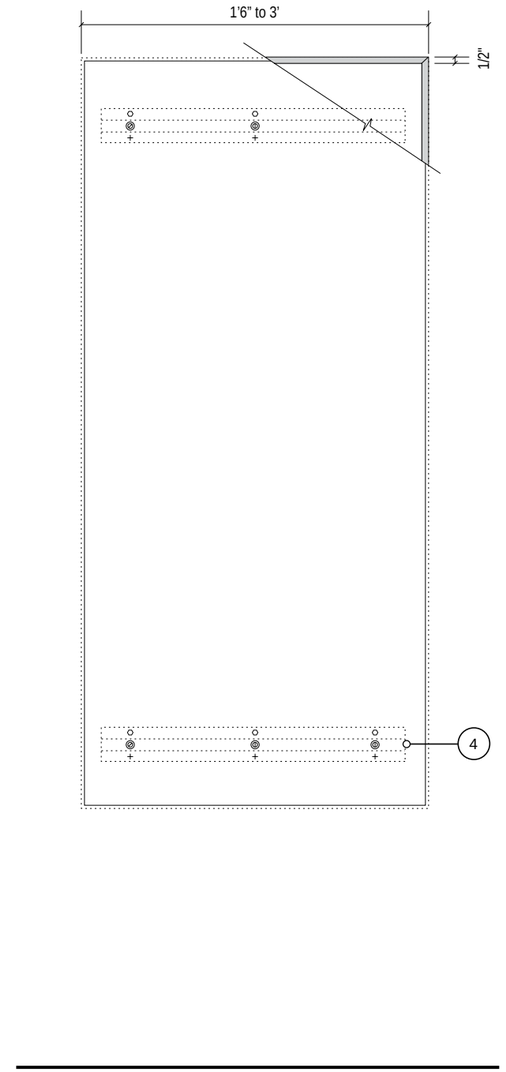

Front View

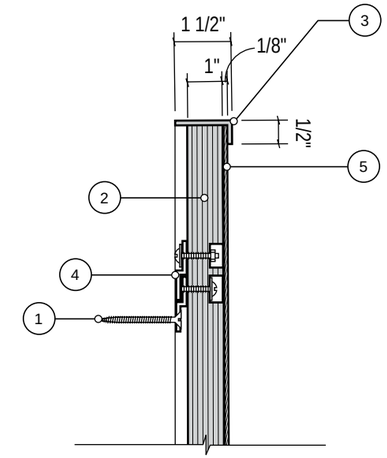

Detail View

Interpretive: Type E6 - Structure

1. Attachment hardware, style depends on substrate
2. 1" thick all-weather backer panel
3. Painted 1/2" face x 1 1/2" side aluminum frame with security hardware
4. Low-profile "Z" cleat
5. 4-color fiberglass embed digital exterior graphic

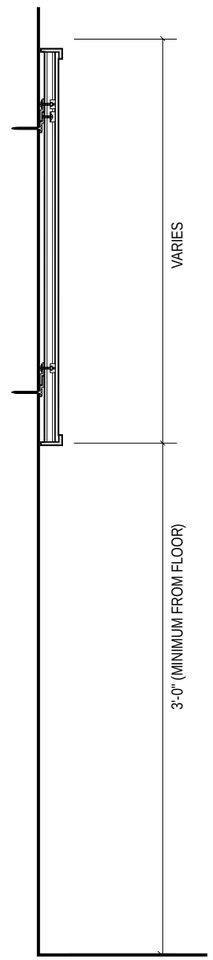

Section View

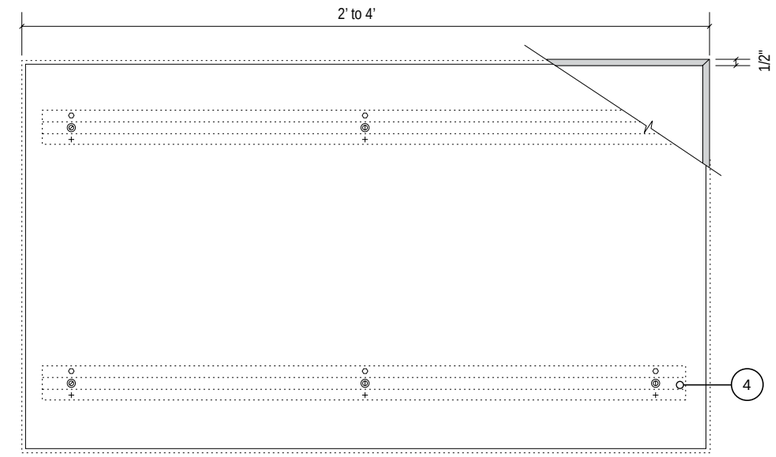

Front View

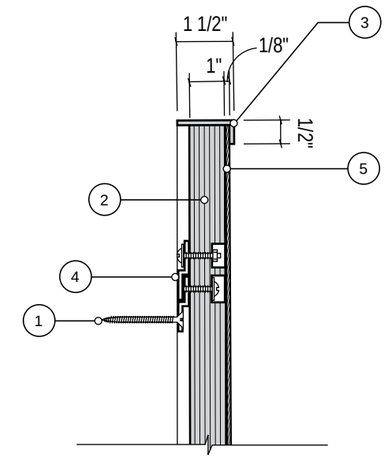

Detail View

Interpretive: Type E7 - Structure & Graphic

1. Porcelain enamel plate (or equivalent). Numeral and text to match black, background to match 8644M Seal Beach.

2. Integral protruding bolt secures aluminum backer plate to aluminum tubing with security nut.

3. 1/8" thick aluminum backer plate, coated with heavy enamel as buffer between aluminum and porcelain steel plate.

4. Painted aluminum 1" x 1" post, direct burial or as over-sleave depending on mounting condition, painted to match CL2725D Dissent.

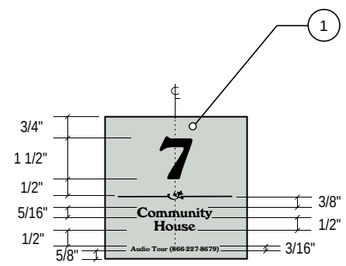

Detail View
(Graphic)

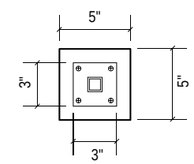

Plan View

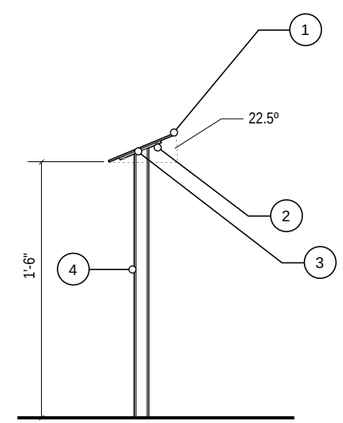

Section View

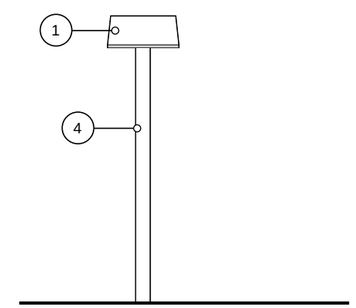

Front View

Interpretive: Type E8 - Structure & Graphic

1. Porcelain enamel plate (or equivalent). Numeral and text to match black, background to match 8644M Seal Beach.

2. Mounting assembly. Consists of 1/8" thick aluminum plate and 1" x 1" square aluminum tube.

3. 1/8" thick aluminum backer plate, coated with heavy enamel as buffer between aluminum and porcelain steel plate, mechanically fastened.

4. Existing free-standing sloper.

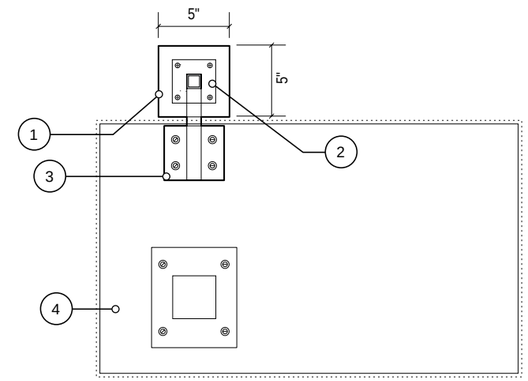

Plan View

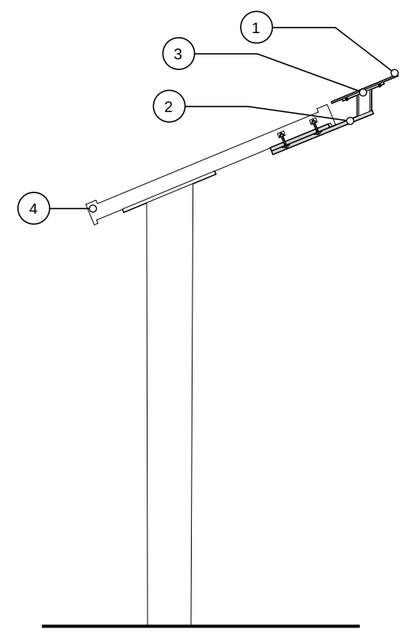

Section View

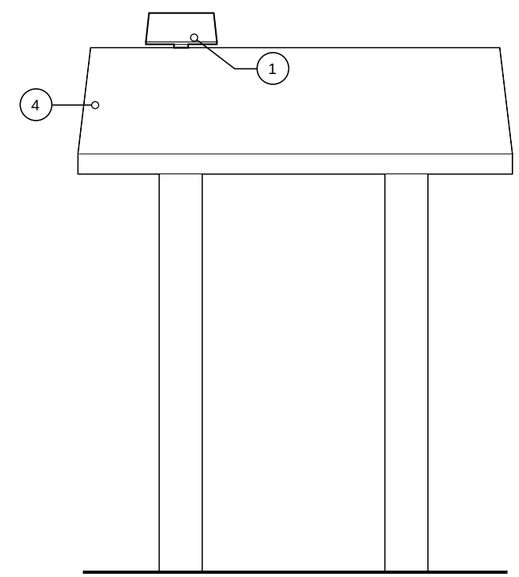

Front View

Interpretive: Type E9 - Structure & Graphic

1. Porcelain enamel plate (or equivalent). Numeral and text to match black, background to match 8644M Seal Beach.

2. Mounting assembly. Consists of 1/8" thick aluminum plate and 1" x 1" square aluminum tube.

3. 1/8" thick aluminum backer plate, coated with heavy enamel as buffer between aluminum and porcelain steel plate, mechanically fastened.

4. Existing wall mounted sloper.

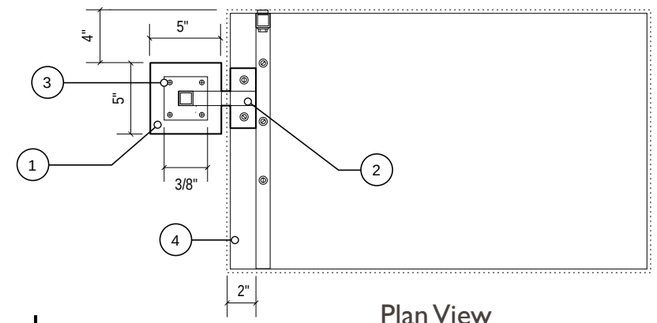

Plan View

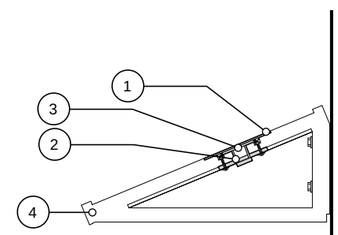

Section View

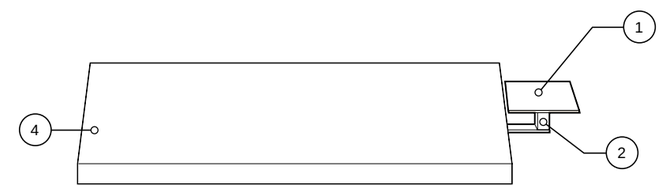

Front View

Interpretive: Type E10 - Structure & Graphic

1. Porcelain enamel plate (or equivalent). Numeral and text to match black, background to match 8644M Seal Beach.

2. Wood support mount, secured to sign post with mechanical fasteners, finished smooth and painted to match substrate.

3. 1/8" thick aluminum backer plate, coated with heavy enamel as buffer between aluminum and porcelain steel plate, mechanically fastened to wood support mount.

4. Existing Building Identity Sign.

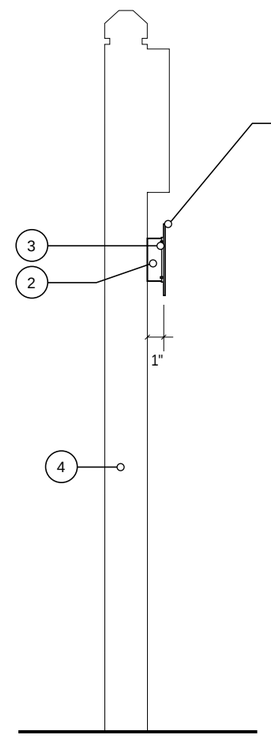

Section View

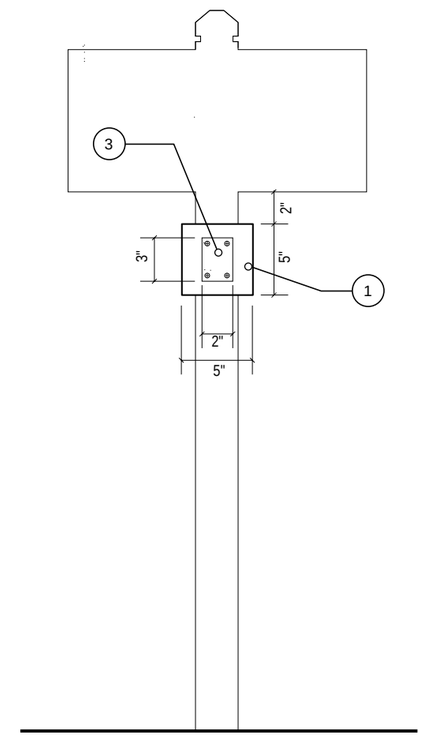

Front View

Interpretive: Installation

1. Post
2. Concrete, with positive top drainage angle
3. Gravel
4. Post (sleeve)
5. Post Anchor

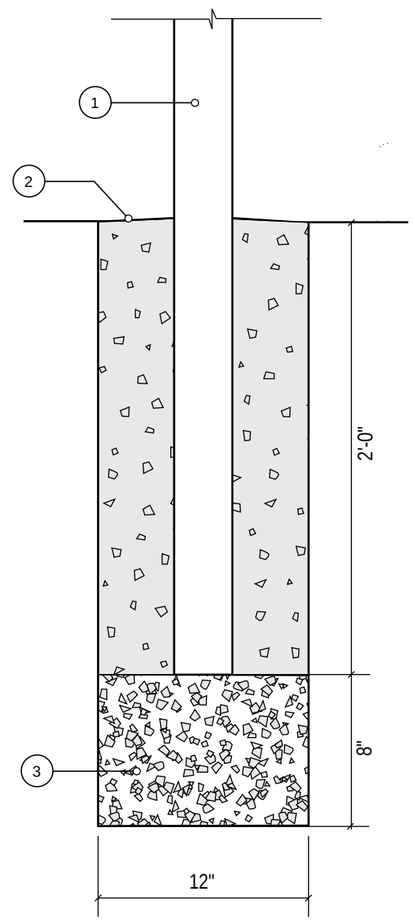

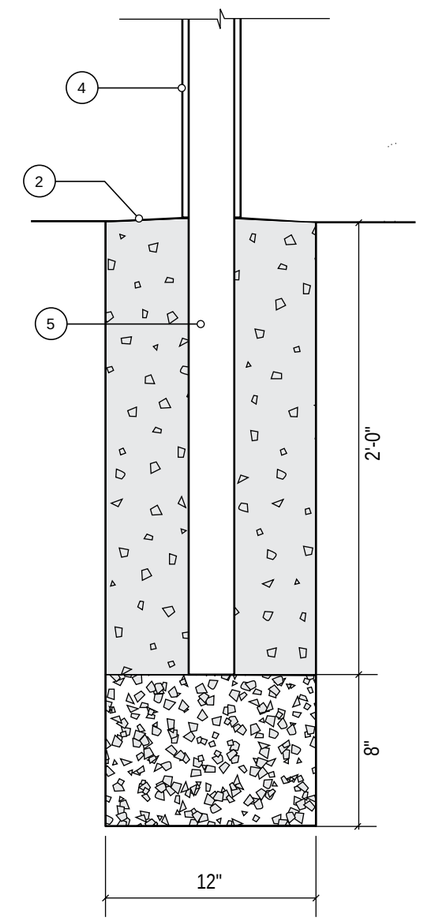

Over-sleave Mounting Option

Locator Maps: Phase I Wayfinding Locations

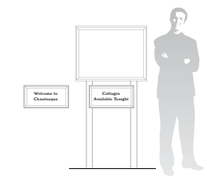

Type C
Changeable Panel

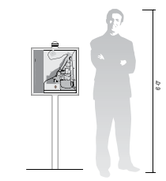

Type D
Directory Map

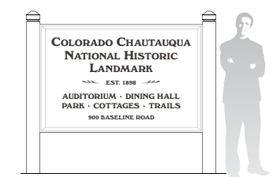

Type G
Gateway

Types P1 and P2
Pedestrian Directional

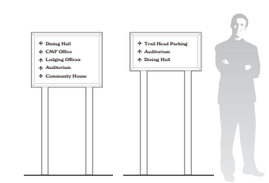

Types V1 and V2
Vehicular Directional

Locator Maps: Phase I Interpretive Locations

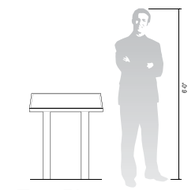

Type E1
Large Sloper
Free-standing

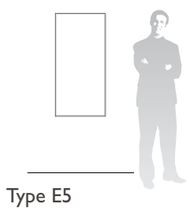

Type E5
Wall Mount
Vertical

Locator Maps: Phase II Wayfinding Locations

Types P1 and P2
Pedestrian Directional

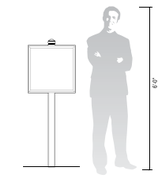

Type D
Directory Map

Locator Maps: Phase II Interpretive Locations

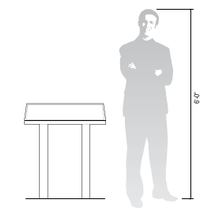

Type E1
Large Sloper
Free-standing

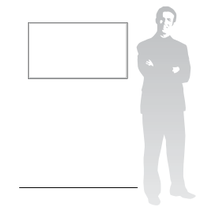

Type E6
Flush Wall Mount
Horizontal

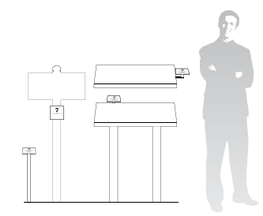

Type E7, E8, E9, E10
Tour Locator

Locator Maps: Future Wayfinding Locations

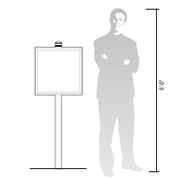

Type D
Directory Map

Locator Maps: Future Interpretive Locations

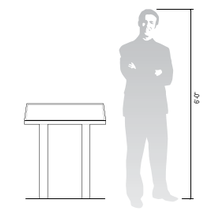

Type E1
Large Sloper
Free-standing

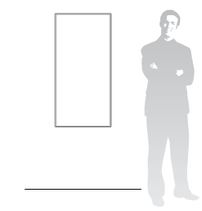

Type E5
Wall Mount
Vertical

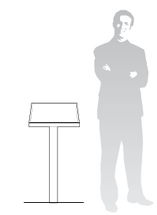

Type E2
Small Sloper
Free-standing

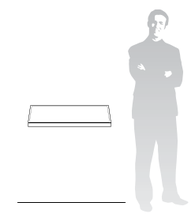

Type E3
Large Sloper
Wall Mount

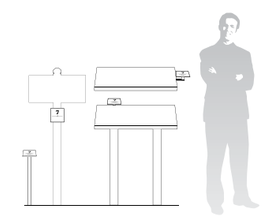

Type E7, E8, E9, E10
Tour Locator

Purpose of the Guiding Principles
These guiding principles represent a shared statement about the nature of the Colorado Chautauqua and the manner in which its primary stewards (the City of Boulder and the Colorado Chautauqua Association) intend to collaborate in the planning and management of its future.

1 A Public Place
Chautauqua is a shared community resource and a public place. It is essential that it remain a place that is accessible, safe and welcoming to the general public.

2 A Historic Landmark
The Colorado Chautauqua is a recognized national and local historic landmark. Preservation of its historic character is of the utmost importance when making decisions about its future.

3 A Historic Mission
Chautauqua supports cultural, educational, social and recreational experiences that are integral to its historic character and function. Preservation and perpetuation of its historic mission and supporting operations are paramount to sustaining the spirit of Chautauqua.

4 A Balanced Approach
Chautauqua encompasses multiple ownerships and missions; the needs and interests of many must be balanced in a manner that protects the site and spirit of Chautauqua, in keeping with principles 1, 2 and 3. Management decisions about surrounding uses should be made with sensitivity to potential impacts on Chautauqua. At the same time, Chautauqua should be managed and preserved in a manner consistent with the community's sustainability goals and with sensitivity to impacts on surrounding residential neighborhoods.

5 Collaborative Place Management
To achieve the balanced approach described in principle 4, the Chautauqua area (including the CCA leasehold and adjacent parks and open space) must be collaboratively managed. In particular, the following components of collaborative place management must be clearly defined and agreed to by the city and the CCA:

5a Roles and Responsibilities. The city and the CCA have the joint responsibility of preserving, perpetuating and improving the spirit and historic character of Chautauqua through collaborative stewardship and place management as well as the responsibility of managing specific public and private assets:

- ***The Colorado Chautauqua Association*** has the role of perpetuating the spirit and mission of the historic Chautauqua through production of cultural, educational, social and recreational experiences to benefit the Boulder community and visitors to the area. The CCA also has the responsibility, under its lease with the city, of managing and programming certain public assets and CCA's owned cottages, lodges and other facilities in a manner consistent with its historic mission and these guiding principles.

- ***The City of Boulder*** has multiple roles, including: 1) **owner** of the underlying land throughout Chautauqua, three key historic buildings and an historic structure in the leasehold, serving in this role as landlord to the CCA; 2) **manager** of the public infrastructure throughout Chautauqua and of the public assets and lands outside the leasehold, including a public park and open space; and 3) **regulator** in terms of city laws. The city has the responsibility of representing the interests and priorities of the community at-large; maintaining safe and efficient access to and within the site; and coordinating policy and action in a manner consistent with these guiding principles.

5b Thresholds for Collaborative Processes. Effective collaboration among the multiple core entities responsible for the Chautauqua area's management is critical. In general, the collaborative processes between CCA, the city and the public should proportionately increase as the scope of the proposed change increases as illustrated in the following graph:

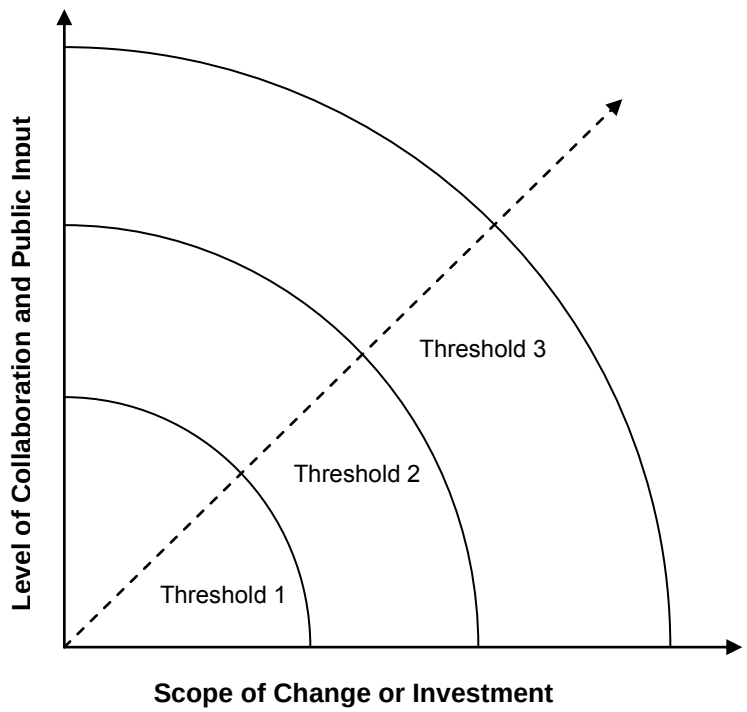

The following is illustrative of "thresholds for collaboration" that will be refined, clarified and agreed to by the city and the CCA to guide future agreements and decision-making processes. It may or may not be the final recommendation to have three thresholds; that will be determined in the next steps.

- **Threshold 1: Minor Modifications.** These encompass site or facility changes that do not involve significant changes to the site or public building exteriors; are led and financed primarily by a single party; and are consistent with these guiding principles. Coordination and collaboration between the CCA and the city is essential, but successful precedents exist that can be clearly defined and followed to ensure

transparency, mutual understanding and continued success. *Examples of this type of change include recent enhancements to site way finding and interpretive signage and current work to improve the bus pull-out and site circulation for improved pedestrian safety*.

- **Threshold 2: Significant Modifications Led by a Single Party.** These are changes to the site or facilities that significantly alter a city-owned building's exterior, involve new construction or demolition, significantly alter historic site patterns or designs, and/or represent a significant change in use. This level of change may be proposed by a single party but will require a higher degree of coordination and collaboration early in the process to address the concerns or needs of other parties and ensure consistency with these guiding principles. The resulting process may or may not lead to shared financial responsibility, but should ensure transparency, opportunities for public input and clarity and timeliness of decision making for the concerned party (i.e.). *Examples of this type of change include the potential addition of ADA-accessible bathrooms for the Chautauqua Auditorium and the concept of a new free-standing building*.
- **Threshold 3: Significant Modifications Requiring Multi-Party Investment.** These are changes similar in scope or impact to those in Threshold 2, but which would clearly benefit from joint investment in their design and implementation. Due to the shared investment, these may require an even higher degree of collaboration early and throughout the process. *An example of this type of change is the potential undergrounding of utilities around and through the National Historic Landmark area.*

5c Guiding Policy Documents. To support a collaborative approach to management of the Chautauqua area, key policy documents should be jointly developed and adopted by the core parties. These include, but are not limited to, the Chautauqua Collaborative Stewardship Framework (which should be revised and finalized consistent with these guiding principles) and the Chautauqua Design Guidelines.

5d Public Information and Input. Because the management of Chautauqua is a shared responsibility across multiple entities, it can be difficult for the public to find complete and accurate information regarding planning and management-related issues for the area. A shared approach to providing public information and opportunities for public input shall be developed and implemented to support these principles' goals for collaborative stewardship in the public interest.

6 A Cautious Approach to Change

While it is recognized that changes within and around Chautauqua will occur over time, decisions over these matters must be thoughtfully and cautiously considered, and collaboratively managed in accordance with these guiding principles to ensure the preservation of Chautauqua's historic character and unique sense of place.

7 Shared Financial Responsibility

Because the Chautauqua area is a shared resource with community-wide as well as interest-specific benefit, investments in its care and upkeep should be shared in accordance with the benefit provided to each interest or user group as well as the community at-large. This does not remove the possibility of significant changes being funded by a single party; however, when there are clear benefits to multiple entities, joint funding should be considered.

Dairy Center for the Arts

The Dairy Center for Arts is requesting funding of $4 million for improving two of the current theaters, including soundproofing, the addition of dressing rooms and the reconfiguration of one theater into a black box theater, as well as expansion and modernization of the building's lobby and façade, including an outdoor deck area as a special events space. The request would also include modernizing a hallway, reconfiguring administrative spaces to provide greater efficiency, and funding for lost operational revenues during the construction period (note: city staff does not recommend including funding for loss of revenue). A detailed plan and budget has been developed in concert with an architect, general contractor and acoustics consultant. With appropriate funding, this project is nearly ready to go.

The building the Dairy Center for the Arts is located in is owned by the City of Boulder. Staff has reviewed the proposed project. Subsequent to the June 17, 2014 Council meeting correspondence was received from the board of the Dairy Center for the Arts stating they were in agreement with removing the dollars for lost operating revenues during construction. The amount was approximately $150,000.

This Page Intentionally Left Blank

Museum of Boulder

The Museum of Boulder has recently acquired the historic Masonic Lodge building at Broadway and Pine with plans to convert the building into an expanded museum that will accommodate larger displays, as well as Smithsonian-class traveling exhibits in a specially designed gallery. The museum's scope would be expanded to allow for science and technology exhibits, as well as enhanced programming and space for children. The Museum has embarked on an ambitious capital campaign to raise the $8 million dollars needed for the renovation, and is requesting that the city provide $4 million dollars of that total with the rest to be matched by the community. The museum commissioned an evaluation of the viability of a museum of this size and scope in Boulder, and found that it was likely to draw at least 55,000 visitors per year.

Staff feels the proposed Museum of Boulder will be a notable new addition to downtown Boulder and an exciting new cultural draw. The city and the Museum of Boulder have a broad understanding of the museum's potential financial impacts. Based on early economic impact analyses of expected museum visitors, the city should see some increased revenues but should not expect the museum to generate large new city revenues. Also, as is the case for many non-profit facilities, funding needs for operational expenses may be challenging, especially in early years. The intent of the proposed ballot measure is that city funding would be matched by private fundraising efforts in the spirit of a partnership and that city funding would not be expected to support ongoing operating expenses.

This Page Intentionally Left Blank

Council Working Agreements

Council Process:

- The council will work on general discipline in being prepared to ask questions and make comments.
- The council asks the mayor to intervene if discussion on agenda items extends beyond a reasonable time frame.
- The council will engage in the practice of colloquy to fully explore the different sides of a specific point.
- The mayor will ask the city clerk to set the timer lights for council members if discussions begin to exceed efficient debate. Members should respect the lights as a time reminder, but will not be bound by them as absolute limits.
- Rather than restating a point, council members should simply say "I agree."
- The council agenda committee may, with advance notice, adjust each public speaker's time to two rather than three minutes during public hearings for items on which many speakers want to address the council.
- Council members will grant each other permission to mentor and support each other on how each person contributes to the goal of being accountable for demonstrating community leadership.
- In order to hear each other respectfully and honor the public, council will avoid body language that could convey disrespect, side conversations, talking to staff, whispering to neighboring council members, passing notes, and leaving the council chambers.
- Regarding not revisiting past discussions, the council should check-in with fellow members periodically to ensure that this is not an issue.
- During a council meeting, any form of electronic messages, including emails and texts, that relate to matters being considered and which arrived at any time during that meeting shall not be read by council members, nor shall any messages on matters under consideration be sent by council members.

Council Communication:

- Council members agree to keep quasi-judicial roles scrupulously separate between members of boards and members of council, avoid expressing ideas to board members on things coming before the board, and carefully disclose or recuse themselves when there is involvement with board members on a topic.
- Council agrees to e-mail the city manager about issues that they run into that staff or boards may be working on so that the manager can be actively involved in managing issues and keeping the full council informed well in advance of items coming before council for action.
- Members will keep the full council informed on issues from committees, public groups or other agencies that they are following, through hot line e-mails, brief verbal reports at the end of council meetings or other means.
- The council will find ways to support majority council decisions and adequately inform the public, through responsive letters that explain how divergent points of view were heard and honored in decisions, via standard e-mail responses for hot issues, by occasional council Letters to the Editor to clarify the facts, or by seeking out reporters after meetings to explain controversial decisions.

Council Committees:

- Council committee meetings will be scheduled to accommodate the council members on the committee.
- Notice of the times and places for each committee meeting will be noticed once per month in the Daily Camera.
- The council agenda will include time for reports from committees under Matters from Members of Council, noting that written communications from the committees are appropriate as well.

Selection of Mayor and Mayor Pro Tem:

- Council members will make a good faith effort to the select the mayor and mayor pro tem in an open and transparent process.
- After the council election, members seeking election as mayor or mayor pro tem should:
    - make their interest in the positions known to their fellow members as soon as possible;
    - focus their communication with other council members on the positive attributes the member brings to the positions; and
    - refrain from any negative remarks about any person seeking election as mayor or mayor pro tem.
- Nominated individuals' presentations may include, but need not be limited to the following:
    - the skills and attributes the member would bring to the mayoral position;
    - the member's ability to efficiently run council meetings, respect the views of the minority while allowing the majority to rule, and perform other mayoral duties;
    - how the member would represent the city and city council and mayor position at gatherings outside of city council meetings
    - how the member would serve on and appoint other council members to regional and national boards and commissions; and
    - how the member would promote trust of the community and other council members.
- Council members should work to avoid divisiveness by being inclusive during the mayoral selection process.

Agreed: Members of the Boulder City Council

Approved by Council: January 21, 2014

	Project	Council or Staff?	2014				2015			
			1st Quarter	***2nd Quarter***	***3rd Quarter***	***4th Quarter***	***1st Quarter***	***2nd Quarter***	***3rd Quarter***	***4th Quarter***
HOUSING/LAND USE/PLANNING	Comprehensive Housing Strategy	Council	Briefing - with other related efforts, workplan	SS - objectives, recommended early action items	Briefing	Direction on policy options	Adopt strategy and action plan			
		Staff Activities	Housing choice analysis; needs assessment; best practices; trends data; workplan	Opportunity site inventory; potential tools with "bang for buck" analysis	Develop policy options and recommendations; stakeholder engagement					
	North Boulder	Council	IP - update and preliminary policy choices	Briefing - options and feedback	Update and direction					
		Staff Activities	Public meeting with options	Preferred options and refined action plan	Action plan					
	East Arapahoe/Sustainable Streets and Centers	Council		Briefing - issues, scope, and feedback	SS - preferred scenarios, draft plan, and action plan	Plan "Lite" - council action	Next Corridor - 30th St or Colorado			
		Staff Activities	Joint East Arapahoe workshop to "test" planning workshop	East Arapahoe scope of work, public workshop, scenario modeling, character definition	Scenario refinement ad recommendations	Develop East Arapahoe action plan				
	Resilience	Council		Briefing - scope agenda		SS - scoping session	SS	Direction or IP	Direction or IP	Direction or IP
		Staff Activities	Agenda setting workshop 4/28	Hire Asst. City Manager, begin strategy development	Scope strategy components	Scoping	Resilience work	Strategy analysis and development	Strategy analysis and development	Strategy analysis and development
	Boulder Valley Comprehensive Plan	Council				SS - scoping session	SS	Direction or IP	Direction or IP	Direction or IP
		Staff Activities				Scoping analysis and partner outreach	Issues identification	Strategy analysis and development	Strategy analysis and development	Strategy analysis and development
	Other	Council	Annexation Strategy - Direction (options and feedback)	Usable open space - Code Change	Economic Sustainability Strategy implementation - Code Change					
			Density/ROW Dedication Calculations - Code Change	Parking generation and reduction - Code Change						
			County Assessor valuations for landscape and lighting upgrades - Code Change	Renewable energy sources - Code Change						
		Staff Activities	Annexation Strategy - analyze costs and options	Planning Board for above code changes	Planning Board for above code changes					
			Planning Board for above code changes							

	Project	Council or Staff?	2014				2015			
			1st Quarter	***2nd Quarter***	***3rd Quarter***	***4th Quarter***	***1st Quarter***	***2nd Quarter***	***3rd Quarter***	***4th Quarter***
TRANSPORTATION	Transportation Master Plan	Council	IP (includes scope for AMPs)	SS (includes AMPS)	Acceptance - establish work program and coordination	Continue implementing pilots	Coordination with BVCP	Coordination with BVCP	Coordination with BVCP	Coordination with BVCP
		Staff Activities	Scenario and sensitivity analysis	Joint board workshop, TAB	Develop final update for board recommendation and council acceptance	Implement and coordination with BVCP and Resilience				
	Community EcoPass	Council	Feasibility Study - joint release with County	Rolls into TMP update						
		Staff Activities								
	Regional Transportation	Council	Briefing	Briefing		Briefing		Briefing		Briefing
		Staff Activities								
	Electric Vehicle Parking Ordinance/Energy Services	Council	Council agenda	SS			IP	IP	IP	IP
		Staff Activities								
	Access Management and Parking Strategies	Council	Scope	SS - Guiding principles, work program and process (includes TMP update)	Round 1 Code Changes - Auto and parking planning, zoning regs, EV charging stations	Update - Work plan and policy issues	Long Term Round 2 - Parking code changes and other policy issues	Council endorsement of ongoing work plan		
		Staff Activities	Finalize work program	Short term parking code regulation changes	Long term parking code changes	Long term parking code changes	Additional workplan items and public process tbd	Finalize document		
			TDM tool kit development for TMP integration	Long term parking code regulation changes	Additional workplan items tbd	Additional workplan items and public process tbd				
			Short term parking code ordinance changes	Public outreach and joint board meeting						
			Research/best practices	Additional workplan items tbd						
			Develop communications strategy							
ADD'L HOUS/PLAN/TRANS	Comp. Financial Strategy/Capital Bond	Council	Direction	SS	SS - finalize ballot?	Ballot?				
		Staff								
	Cap. Bond 1 Implement.	Staff		Construction			85% complete		100% Complete	
	Flood Recovery	Staff		Repairs and FEMA Reimbursement	FHWA/FEMA work	FHWA/FEMA work	Building Better Boulder		Building Better Boulder	
	Boulder Junction Phase 1 Implementation	Staff			South side of Pearl opens	Ongoing redevelopment coordination		Goose Creek Bridge opens		Depot Square opens
	Boulder Junction Phase 2 - City owned site	Staff		Coordination	Coordination		Coordination			
	Yards mobilized to move for Pollard option	Staff		Grading, prairie dogs, moving	Final prep			Yards moves continue		
	Safe Routes to School	Staff			Public process to prioritize projects		Application			
	Implement Transpo.Tax	Staff		Expand maintenance, hire						

	Project	Council or Staff?	2014				2015			
			1st Quarter	***2nd Quarter***	***3rd Quarter***	***4th Quarter***	***1st Quarter***	***2nd Quarter***	***3rd Quarter***	***4th Quarter***
LIVABILITY	Homelessness/Human Services	Council Items	Shelter/ Funding: Update on position and relationship with Boulder Shelter; Shelter funding and issues update and other funders.	SS - Human Services Strategy Update and Homeless Action Plan (including funding priorities and partnerships)	IP - Homelessness Issues	SS - Human Services Strategy Update and Homeless Action Plan (including funding and service priorities)				
					Regional Planning update/services and housing					
					2014 Point in Time Report					
					SS - Services and Regional coordination update	IP - Services and Regional coordination	IP - Services and Regional	SS - Services and Regional coordination	SS - Services and Regional	IP - Services and Regional
		Staff Activities	Facilitate monthly Boulder Homeless Planning Group re:	HS Strategy Update and Homeless Action Plan Update	HS Strategy Update and Homeless Action Plan -					
			Convene regional meeting with Denver/Boulder/MDHI							
			County Ten Year Plan meeting with focus on meeting housing	County Ten Year Plan meeting with focus on meeting housing						
	Neighborhood/Park Events and Other Events	Council Items	GOCO grant application		GOCO grant acceptance					
						SS - Special Events with Street Closures and Block Party Permitting				
		Staff Activities	Review current PR permits and developm pilot program	Conduct pilot neighborhood event (link with Hill and GOCO school yard grant)	Conduct pilot neighborhood event	Review neighborhood park planning and event pilot success and plan schedule for 2015	Finalize njeighborhood event schedule for 2015	Conduct neighborhood events	Conduct neighborhood events	Review pilot program and propose permit changes required to make improvements
			Link with park planning outreach	Summer recreation programs - arts, music, health, wellness	Continue summer art series and volunteer events					
			GOCO school yard grant	Submit GOCO grant	GOCO grant award - start civic area community park					
				Review and analysis of existing special event permitting	Develop recommendations					
	Arts	Council Items		SS - Library & Arts, including Community Cultural Plan				Adoption of Community Cultural Plan		
		Staff Activities		Work with new director						

	Project	Council or Staff?	2014				2015			
			1st Quarter	***2nd Quarter***	***3rd Quarter***	***4th Quarter***	***1st Quarter***	***2nd Quarter***	***3rd Quarter***	***4th Quarter***
LIVABILITY	Code Enforcement	Council Items	SS	SS (includes Social Issues Strategy information)						
		Staff Activities								
	University Hill	Council Items	IP - 14th St Public/Private Partnership	Update - 14th St Public/Private Partnership	Update - 14th St Public/Private Partnership					
			Bears/Trash							
				SS - Hill Reinvestment Strategy	Update - Hill Reinvestment Strategy					
		Staff Activities	14th St - Hill Alt. Mode survey	14th St - Finalize analysis and develop recommendation to proceed with the Global Agreement						
			14th St - Finalize LOI							
			14th St - Financial Analysis							
			14th St - Additional access analysis							
			14th St - Board outreach							
			Pilot Parklet Competition	Parklet Implementation						
			Outreach to CU and stakeholders for support of Reinvestment Strategy	Fox Theatre mural by CU students	start pilot RSD program (to run through 2016)					
			Recommendation for staffing Strategy implementation and prelim. analysis of future org structure options	Hire a fixed term Hill Coordinator						
	Civic Area	Council Items					SS - Park Program and Improvements			
		Staff Activities	Civic Activity Team established	Coordinate music in park series		Review summer series success and revise for 2015	Prepare first phase of park improvements for 2015	Conduct adult fitness and health classes	Conduct visitor event at civic area around art installations	
			Hire Civic Area staff for P&R	Add seasonal park staff for outdoor education and orientation		Expand Ready to Work crew	Revise summer programs and plan for 2015	Install temporary adult fitness playground	Coordinate horticulture gardens with Farmers' Market event	
			Prepare GOCO grant for nature play and park planning	Conduct volunteer event around upgrades to Peace Garden and edible plant exhibit		Complete park planning outreach	Conduct art competition for summer installation	Install south side nature play area		
			Work with Park Foundation to develop plan for art and entertainment	Coodinate with CU for partnership with GUB and Civic Area park plan		Develop 1% for Arts demonstration project in partnership with foundations and non-profits		Expand seasonal staffing and horticulture/edible garden displays		

	Project	Council or Staff?	2014				2015			
			1st Quarter	***2nd Quarter***	***3rd Quarter***	***4th Quarter***	***1st Quarter***	***2nd Quarter***	***3rd Quarter***	***4th Quarter***
LOCAL FOOD	Civic Area	Council Items	IP - update on implementation		SS - catalyst projects					
		Staff Activities								
	Ag Plan	Council Items	IP				Acceptance			
		Staff Activities								
	Other or not categorized	Council Items								
		Staff Activities	CU/BVSD partnerhip for neighborhood garden	Form cross-dept team	Develop work plan to achieve council vision					
			Burk Park/Horizon School playground	Housing links with YSI programs and local gardening pilot						
			Design guidelines for edible landscape in local parks							
CLIMATE AND ENERGY	Zero Waste Master Plan	Council Items	IP	SS - options and feedback		Acceptance and action plan		Implementation - commercial focus		
		Staff Activities	Stakeholder input on options and rulemaking on curbside compost		Public feedback on strategies	Draft plan and action plan for public review		Implementation - program enhancements and ordinance development		
	Municipalization	Council Items		SS - workplan	Briefing - energy services	Briefing - energy services	Update - energy services	Update - energy services	Update - energy services	Update - energy services
				SS - energy services						
		Staff Activities		Xcel/city task force; refine recommendations						
	Climate Commitment	Council Items		Briefing - framework, preliminary goals/targets, strategy development	SS - goals/targets, feedback on strategy scenarios, draft document	Approval				
		Staff Activities	Working groups meet	Scenario development; GHG inventory complete	Strategy formulation; city organization initiative launched		Launch action plan			
	Valmont Butte	Council Items			SS					
		Staff Activities								

	Project	Council or Staff?	2014				2015			
			1st Quarter	***2nd Quarter***	***3rd Quarter***	***4th Quarter***	***1st Quarter***	***2nd Quarter***	***3rd Quarter***	***4th Quarter***
OPEN SPACE	Charter Issues	Council Items			Address disposition process and use of Realization Point for pro bike race					
		Staff Activities								
	Highway 93 Underpass	Council Items								
		Staff Activities			In process					
	Eldo to Walker Ranch	Council Items								
		Staff Activities	City/County review of contractor proposals for potential mountain bike connection	Routes - weather dependent						
	IBM Connector	Council Items								
		Staff Activities		City/County requirement complete and await railroad to replace bridge						
	Trailhead as part of transportation system	Council Items								
		Staff Activities			status update					
	Other or not categorized	Council Items								
		Staff Activities			additional signage					

	Project	Council or Staff?	2014				2015			
			1st Quarter	***2nd Quarter***	***3rd Quarter***	***4th Quarter***	***1st Quarter***	***2nd Quarter***	***3rd Quarter***	***4th Quarter***
OTHER	Emerald Ash Borer (EAB)	Council	IP							
			Develop preliminary management plan	Implement pilot plan	Monitoring	Evaluate long term forest management plan and EAB strategy	Management plan and response	Response	EAB	EAB
	Civic Use Pad	Council	SS - Public/private partnership	Approval of MOU with St. Julien Partners	Update on negotiations with St. Julien Partners					
	Human Services Strategy	Council		SS		SS		Public hearing		
	Various	Council	IGA with CDOT/County for US 36 bikeway maintenance	Pilot dog waste composting project - Valmont and OSMP possible site	Transportation code changes for AMPS	Smoking ban - public hearing				
			IGA for bikeway maintenance/ US 36 enhancements	CEAP call up for Baseline Underpass east of Broadway	Comprehensive Annual Finanical Report					
			Old Pearl Street ROW vacation	DRCOG TIP Priorities for city applications	Appointment of independent auditor					
			Transportation code changes - bike parking, TDM, etc.	Mobile food vehicles - ordinance change to expand podding in downtown	Update on investment policies - action					
			NPP - zone expansions and removal		Modification of construction use tax filing - IP then action					
					Pearl Street Mall regulations - code changes					

COUNCIL MEMBERS

Matthew Appelbaum	Mayor
George Karakehian	Mayor Pro Tem
Macon Cowles	Council Member
Suzanne Jones	Council Member
Lisa Morzel	Council Member
Tim Plass	Council Member
Andrew Shoemaker	Council Member
Sam Weaver	Council Member
Mary Young	Council Member

COUNCIL EMPLOYEES

Thomas A. Carr	City Attorney
Jane S. Brautigam	City Manager
Linda P. Cooke	Municipal Judge

KEY STAFF

Bob Eichem	Chief Financial Officer
Alisa D. Lewis	City Clerk
Patrick von Keyserling	Communications Director
David Driskell	Executive Director of Community Planning and Sustainability and Acting Director of Housing
Molly Winter	Downtown, University Hill Management & Parking Services Director
Heather Bailey	Energy Strategy and Electric Utility Development Executive Director
Larry Donner	Fire Chief
Joyce Lira	Human Resources Director
Karen Rahn	Human Services Director
Don Ingle	Information Technology Director
Eileen Gomez	Labor Relations Director
David Farnan	Library and Arts Director
Lynne C. Reynolds	Municipal Court Administrator
Michael Patton	Open Space and Mountain Parks Director
Jeff Dillon	Acting Parks and Recreation Director
Greg Testa	Acting Police Chief
Maureen Rait	Public Works - Executive Director
Tracy Winfree	Transportation Director
Jeff Arthur	Utilities Director

2013 City Council Committee Assignments

INTERGOVERNMENTAL ORGANIZATIONS

Beyond the Fences Coalition	Morzel, Plass (Castillo – staff alternate)
Boulder County Consortium of Cities	Morzel, Young
Colorado Municipal League (CML) – Policy Committee	Jones, Appelbaum (Castillo – staff alternate)
Denver Regional Council of Governments (DRCOG)	Jones, Plass
Housing Authority (Boulder Housing Partners)	Shoemaker
Metro Mayors Caucus	Appelbaum
National League of Cities (NLC)	Appelbaum, Cowles
Resource Conservation Advisory Board	Morzel (at large seat), Plass
Rocky Flats Stewardship	Morzel, Plass (1st alternate), Castillo (2nd alternate)
University of Colorado (CU) / City Oversight	Cowles, Shoemaker, Weaver
US36 Mayors and Commission Coalition	Appelbaum
US36 Commuting Solutions	Karakehian, Morzel (alternate)
Urban Drainage and Flood Control District	Karakehian

LOCAL ORGANIZATIONS

Boulder Museum of Contemporary Art (BMoCA)	Young
Boulder Convention and Visitors Bureau	Plass, Cowles (alternate)
Dairy Center for the Arts	Jones
Downtown Business Improvement District Board	Shoemaker, Weaver, Young

INTERNAL CITY COMMITTEES

Audit Committee	Cowles, Morzel, Shoemaker
Boards and Commissions Committee	Plass, Shoemaker
Boulder Urban Renewal Authority (BURA) Mayoral Appointment	Karakehian
Charter Committee	Karakehian, Morzel, Weaver
Civic Use Pad/ 9th and Canyon	Karakehian, Morzel, Young
Council Retreat Committee	Jones, Morzel
Evaluation Committee	Morzel, Plass
Legislative Committee	Jones, Karakehian, Weaver, Young
School Issues Committee	Morzel, Plass, Shoemaker

SISTER CITY REPRESENTATIVES

Jalapa, Nicaragua	Jones
Kisumu, Kenya	Morzel
Llasa, Tibet	Shoemaker
Dushanbe, Tajikistan	Weaver
Yamagata, Japan	Plass
Mante, Mexico	Young
Yateras, Cuba	Karakehian
Sister City Sub-Committee	Morzel, Cowles, Karakehian

TO: Members of Council
FROM: Dianne Marshall, CAP-OM, City Clerk's Office
DATE: July 22, 2014
SUBJECT: Information Packet

---

1. **CALL UPS**
   - **A.** Vacation of a 25 foot utility easement running perpendicular to the 28th Street Frontage Road and east-to-west at 800 28th Street (4DR2014-00082). This easement vacation is subject to City Council call-up no later than July 22, 2014.
   - **B.** Landmark Alteration Certificate to construct a one-story, 425 sq. ft., two-car garage, remove a portion of the contributing garage and construct a fence along the north, south, east and property lines at 730 Pine St. in the Mapleton Hill Historic District, per section 9-1 1-18 of the Boulder Revised Code 1981 (HIS2014-00087). This Landmark Alteration Certificate is subject to City Council call-up no later than July 22, 2014.
   - **C.** Landmark Alteration Certificate to construct a one-story, four car garage at the northeast corner of the lot where a four car garage was previously located on the landmarked property at 1507 Pine St., per section 9-11-18 of the Boulder Revised Code (HIS20I4-00I74). This Landmark Alteration Certificate is subject to City Council call-up no later than July 22, 2014.

2. **INFORMATION ITEMS**
   - **A.** Flood Recovery Status

3. **BOARDS AND COMMISSIONS**
   - **A.** Beverages Licensing Authority Annual Retreat – April 29, 2014
   - **B.** Beverages Licensing Authority – June 24, 2014
   - **C.** Human Relations Commission – June 16, 2014
   - **D.** Landmarks Board – May 7, 2014
   - **E.** Landmarks Board – June 4, 2014
   - **F.** Open Space and Mountain Parks Board – June 11, 2014
   - **G.** Open Space and Mountain Parks Board – July 9, 2014

4. **DECLARATIONS**
   - **A.** First Congregational Church of Boulder Day – July 17, 2014

INFORMATION PACKET
MEMORANDUM

To: Members of City Council

From: Jane S. Brautigam, City Manager
David Driskell, Executive Director of Community Planning & Sustainability
Charles Ferro, Development Review Manager
Jonathan Woodward, Associate Planner

Date: July 16, 2014

Subject: **Call-Up Item and Extension of the Call-up Period:** Vacation of a 25 foot utility easement running perpendicular to the 28th Street Frontage Road and east-to-west at 800 28th Street (ADR2014-00082). This easement vacation is subject to City Council call-up no later than July 22, 2014.

EXECUTIVE SUMMARY:

The applicant requests vacation of a 25 foot utility easement at 800 28th Street (refer to **Attachment D** for exact location) for a residential multi-family development project that was approved by the Planning Board in October 2013. The area to be vacated will be used for an internal sidewalk and site amenities. This site is the current location of the "Boulder Outlook Hotel." The easement was originally dedicated in 1982 to accommodate utilities. The easement is no longer needed since utilities are not present at this location and will not be needed in the future. All requisite utility companies have approved the request.

The proposed easement vacation was originally approved by staff on June 2, 2014, and one scheduled City Council meeting occurred on June 17, 2014. The 30 day call-up period occurred during City Council's summer recess; therefore, a second call-up date of July 22, 2014 was added to allow City Council adequate time for review.

Section 9-4-4(c) of B.R.C. 1981 states: "The city council may call up any board decision within thirty days of the board's action. The city manager may extend the call-up period until the council's next regular meeting, if the manager finds in writing within the original call-up period that the council will not receive notice of a decision of the board in time to enable it to call up the decision for review."

The city manager finds that, because the next regularly scheduled City Council meeting is after the call-up period, it did not receive notice of the board's decision regarding 800 28th Street in time to

consider call-up within 30 days. Therefore, the City Manager extends the call-up period for this application until the City Council's next scheduled meeting on July 22, 2014.

CODE REQUIREMENTS:
Pursuant to the procedures for easement vacations set forth in subsection 8-6-10(b), B.R.C. 1981, the city manager has approved the vacation of a 25 foot existing utility easement. The date of final staff approval of the easement vacation was June 2, 2014 (refer to **Attachment E**, *Notice of Disposition*). The vacation will be effective 30 days from the second potential call-up date of July 22, 2014, which would be August 21, 2014, unless the approval is called up by City Council.

FISCAL IMPACTS:
This vacation of this easement was required as a condition of approval for Site Review, and it is a key part of the larger site plan for the Boulder Outlook Hotel redevelopment. A denial of this request could cause the applicant to make significant changes to the approved site plan and site design.

COMMUNITY SUSTAINABILITY ASSESSMENTS AND IMPACTS:

- Economic: None identified.
- Environmental: No impacts are anticipated through this utility easement vacation.
- Social: None identified.

BACKGROUND:
The subject property is a 4.2 acre lot located in a Business Transitional 1 (BT-1) zone district (refer to **Attachment A**, *Vicinity Map*). It is being developed as the future American Campus Communities Student Housing. The property has a 25 foot utility easement that runs perpendicular to the west property line (refer to **Attachment B**, *Site Plan).*

The portion of easement to be vacated was originally dedicated for utility purposes in 1982. There are no public or private utilities or structural encroachments located in the easement to be vacated.

Given that there is no public need for the portion of easement for which it was intended, failure to vacate the requested portion of easement would cause hardship to the property owner, and it would interfere with the site plan and design of the future residential multi-family redevelopment.

ANALYSIS:
Staff finds the proposed vacation of a 25 foot utility easement (25 feet x 255 feet) consistent with the standard set forth in subsection (b) of section 8-6-10, "*Vacation of Public Easements*", B.R.C. 1981. Specifically, staff has determined that no public need exists for this utility easement.

No vacation of a public easement shall be approved unless the approving agency finds that:

✓ 1. Change is not contrary to the public interest.

✓ 2. All agencies having a conceivable interest have indicated that no need exists, either in the present or conceivable future, for its original purpose or other public purpose.

✓ 3. Consistent with the Comprehensive Plan and Land Use Regulations.

✓ a. Failure to vacate the easement would cause a substantial hardship to the use of the property consistent with the Comprehensive Plan and Land Use Regulations; or

N/A b. Would provide a greater public benefit than retaining the property in its present status.

PUBLIC COMMENT AND PROCESS:
Notice of the vacation will be advertised in the Daily Camera within the 30 day call up period. Staff has received no written or verbal comments adverse to the vacation.

NEXT STEPS:
If the requested vacation is not called up by City Council then the Deed of Vacation (**Attachment C**) will be recorded. If the requested vacation is called up, and subsequently denied, the applicant will be limited to development on the property outside of the easement area.

Approved By:

Jane S Brautigam

Jane S. Brautigam,
City Manager

ATTACHMENTS:

Attachment A:	Vicinity Map
Attachment B:	Site Plan
Attachment C:	Deed of Vacation
Attachment D:	Exhibit A
Attachment E:	Notice of Disposition

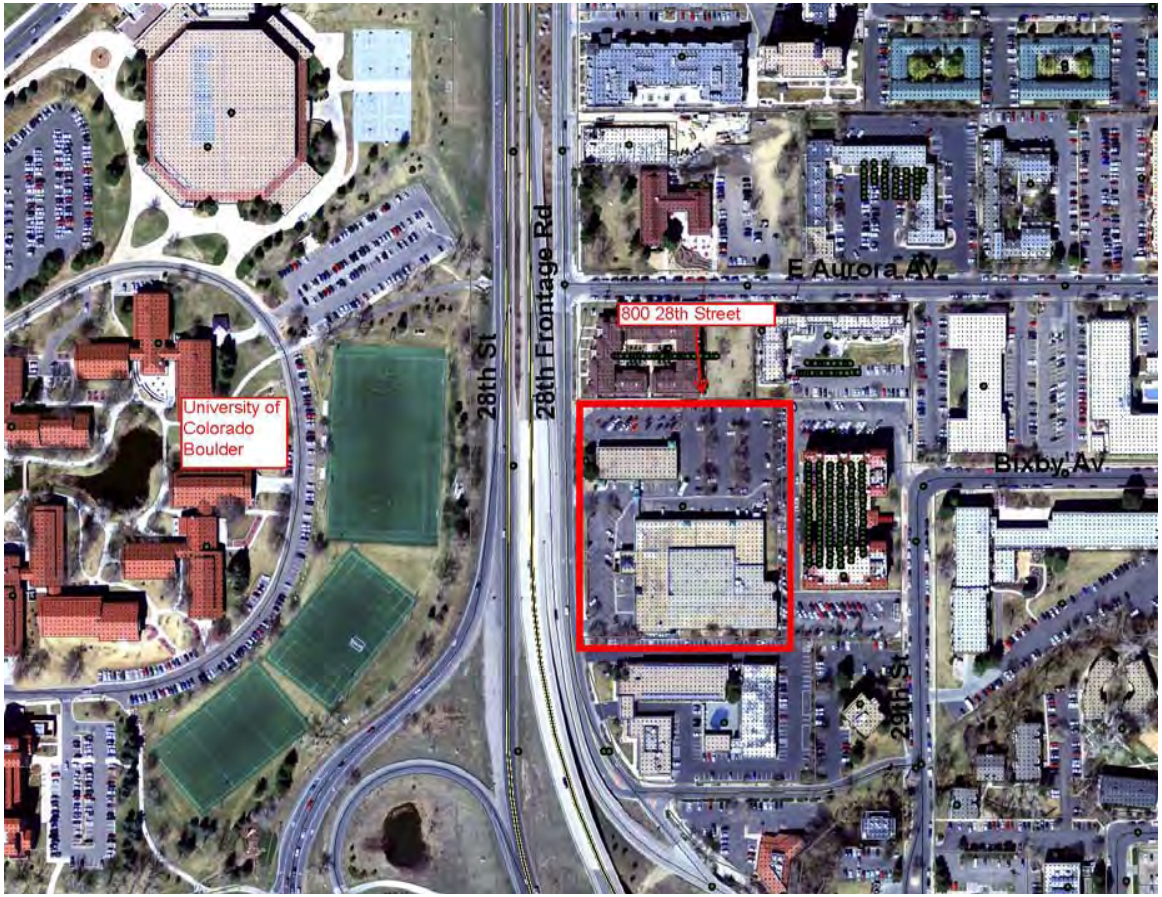
University of Colorado Boulder
28th St
28th Frontage Rd
800 28th Street
E Aurora Av
Bixby Av
29th St

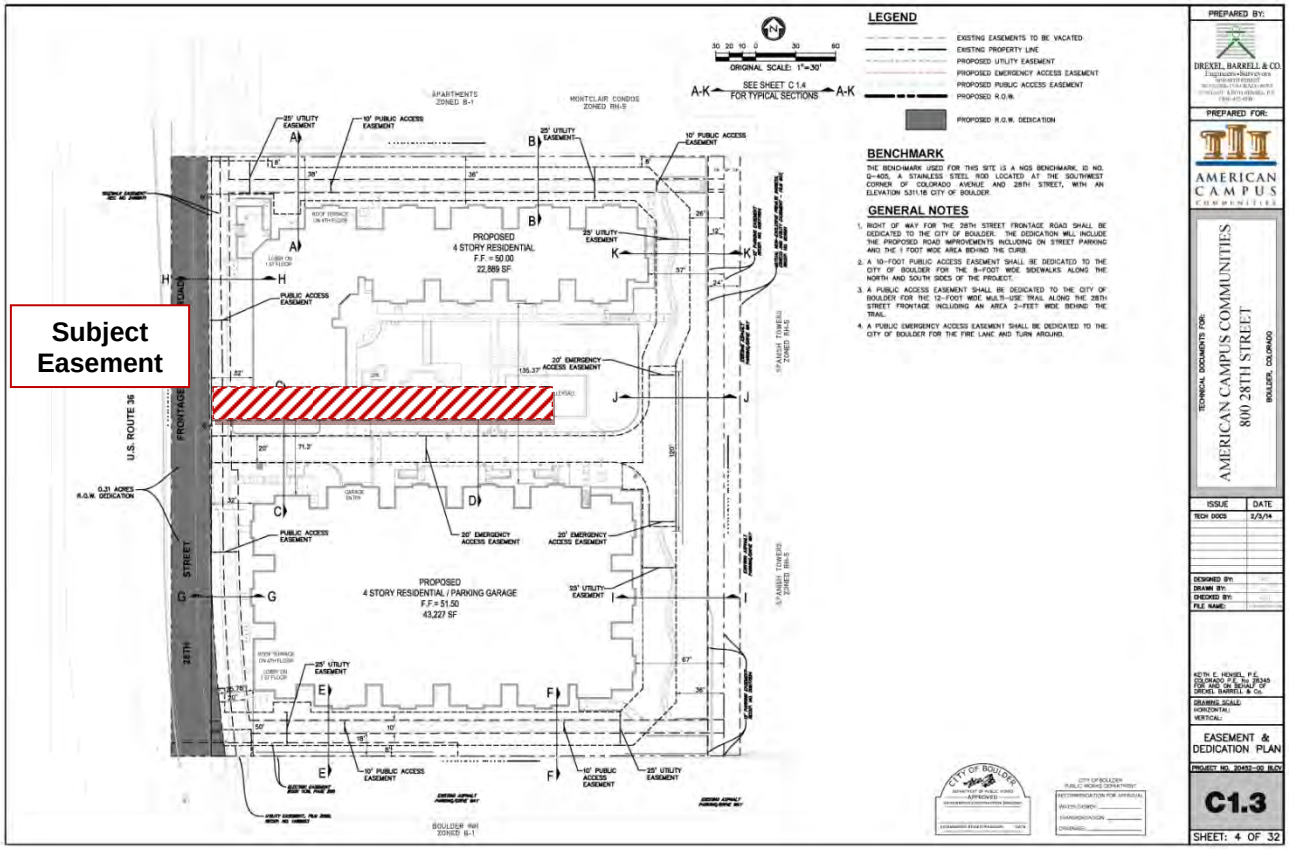
Subject Easement
LEGEND
EXISTING EASEMENTS TO BE VACATED
EXISTING PROPERTY LINE
PROPOSED UTILITY EASEMENT
PROPOSED EMERGENCY ACCESS EASEMENT
PROPOSED PUBLIC ACCESS EASEMENT
PROPOSED R.O.W.
PROPOSED R.O.W. DEDICATION
ORIGINAL SCALE: 1"=30'
SEE SHEET C1.4 FOR TYPICAL SECTIONS
BENCHMARK
THE BENCHMARK USED FOR THIS SITE IS A NGS BENCHMARK, ID NO. Q-405, A STAINLESS STEEL ROD LOCATED AT THE SOUTHWEST CORNER OF COLORADO AVENUE AND 28TH STREET, WITH AN ELEVATION 5311.16 CITY OF BOULDER.
GENERAL NOTES
1. RIGHT OF WAY FOR THE 28TH STREET FRONTAGE ROAD SHALL BE DEDICATED TO THE CITY OF BOULDER. THE DEDICATION WILL INCLUDE THE PROPOSED ROAD IMPROVEMENTS INCLUDING ON STREET PARKING AND THE 1 FOOT WIDE AREA BEHIND THE CURB.
2. A 10-FOOT PUBLIC ACCESS EASEMENT SHALL BE DEDICATED TO THE CITY OF BOULDER FOR THE 8-FOOT WIDE SIDEWALKS ALONG THE NORTH AND SOUTH SIDES OF THE PROJECT.
3. A PUBLIC ACCESS EASEMENT SHALL BE DEDICATED TO THE CITY OF BOULDER FOR THE 12-FOOT WIDE MULTI-USE TRAIL ALONG THE 28TH STREET FRONTAGE INCLUDING AN AREA 2-FEET WIDE BEHIND THE TRAIL.
4. A PUBLIC EMERGENCY ACCESS EASEMENT SHALL BE DEDICATED TO THE CITY OF BOULDER FOR THE FIRE LANE AND TURN AROUND.
PROPOSED 4 STORY RESIDENTIAL F.F. = 50.00 22,869 SF
PROPOSED 4 STORY RESIDENTIAL / PARKING GARAGE F.F. = 51.50 43,227 SF
U.S. ROUTE 36
28TH STREET FRONTAGE ROAD
0.31 ACRES R.O.W. DEDICATION
25' UTILITY EASEMENT
10' PUBLIC ACCESS EASEMENT
20' EMERGENCY ACCESS EASEMENT
PUBLIC ACCESS EASEMENT
APARTMENTS ZONED B-1
MONTCLAIR CONDOS ZONED RH-5
SPANISH TOWERS ZONED RH-5
BOULDER INN ZONED B-1
PREPARED BY:
DREXEL, BARRELL & CO.
PREPARED FOR:
AMERICAN CAMPUS COMMUNITIES
TECHNICAL DOCUMENTS FOR:
AMERICAN CAMPUS COMMUNITIES
800 28TH STREET
BOULDER, COLORADO
ISSUE
DATE
TECH DOCS
2/3/14
DESIGNED BY:
DRAWN BY:
CHECKED BY:
FILE NAME:
DRAWING SCALE
HORIZONTAL:
VERTICAL:
EASEMENT & DEDICATION PLAN
PROJECT NO. 30452-00 BLDG
C1.3
SHEET: 4 OF 32

For Administrative Purposes Only
Address: 800 28th Street
Case No.: ADR2014-00082

DEED OF VACATION

The City of Boulder, Colorado does hereby vacate and release to the present owner(s) of the subservient land, in a manner prescribed by Subsection 8-6-10(b), B.R.C. 1981, the following utility easement previously dedicated to the City of Boulder and recorded in the records of Boulder County Clerk and Recorder at Film 1235, Reception No. 527442 on January 7, 1983, located at 800 28th Street and as more particularly described as follows:

See Exhibit A attached hereto and incorporated herein by reference.

The within easement vacation and release of said easement shall extend only to the portion and the type of easement specifically vacated. The within vacation is not to be construed as vacating any rights-of-way or easements or cross-easements lying within the description of the vacated portion of the easement.

Executed this _____ day of _____, 20__, by the City Manager after having received authorization from the City Council of the City of Boulder, Colorado.

CITY OF BOULDER, COLORADO

By:_____
Jane S. Brautigam, City Manager

Attest:

_____
City Clerk

Approved as to form:

_____
City Attorney's Office

5-28-2014
Date

EXHIBIT A
PAGE 1 OF 2

Engineers/Surveyors

Boulder
Colorado Springs
Steamboat Springs
Grand Junction

1800 38th Street
Boulder, CO 80301-2620

303.442.4338
303.442.4373 Fax

Drexel, Barrell & Co.

JANUARY 21, 2014

LEGAL DESCRIPTION

A TRACT OF LAND LOCATED IN THE SW1/4 OF SECTION 32 T1N, R70W OF THE 6TH P.M., CITY OF BOULDER, COUNTY OF BOULDER, STATE OF COLORADO, BEING MORE PARTICULARLY DESCRIBED AS FOLLOWS:

A TRACT OF LAND AS DESCRIBED IN ON FILM 1235 AS RECEPTION NO. 527442 IN THE BOULDER COUNTY RECORDS.

Legal Description Prepared By

Mathew E. Selders
Colorado License No. 27275
1800 38th Street
Boulder, CO 80301
303-442-4338

COLORADO LICENSED
MATHEW E. SELDERS
27275
5-30-14
PROFESSIONAL LAND SURVEYOR

H:\20452-00 BLCV\Survey\Documents\Legals\Vacation Utility Easement Film 1235, Rec. No. 527442.doc

EXHIBIT A

PAGE 2 OF 2

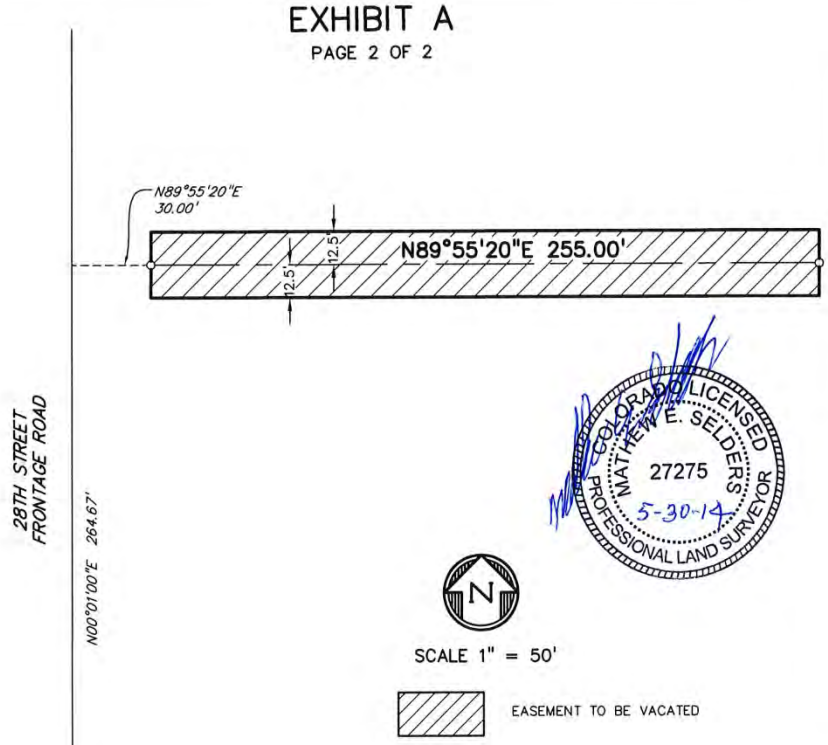

COLORADO LICENSED
MATTHEW E. SELDERS
27275
PROFESSIONAL LAND SURVEYOR
5-30-14

EXHIBIT MAP OF A TRACT OF LAND LOCATED IN THE SE1/4 OF THE SW1/4 OF SECTION 32, T1N, R70W OF THE 6TH P.M., CITY OF BOULDER, COUNTY OF BOULDER, STATE OF COLORADO

NOTE

THIS MAP IS NOT A LAND SURVEY PLAT OR AN IMPROVEMENT SURVEY PLAT. THE PURPOSE OF THIS MAP IS TO GRAPHICALLY SHOW THE LOCATION OF THE TRACT OF LAND DESCRIBED IN THE ACCOMPANYING LEGAL DESCRIPTION.

IN ACCORDANCE WITH CRS 13-80-105;
NOTICE: ACCORDING TO COLORADO LAW YOU MUST COMMENCE ANY LEGAL ACTION BASED UPON ANY DEFECT IN THIS SURVEY WITHIN THREE YEARS AFTER YOU FIRST DISCOVER SUCH DEFECT. IN NO EVENT, MAY ANY ACTION BASED UPON ANY DEFECT IN THIS SURVEY BE COMMENCED MORE THAN TEN YEARS FROM THE DATE OF THE CERTIFICATION SHOWN HEREON.

Drexel, Barrell & Co. Engineers/Surveyors
1800 38TH STREET BOULDER, COLORADO 80301 (303) 442-4338
COLORADO SPRINGS, COLORADO (719) 260-0887
GRAND JUNCTION, COLORADO (970) 257-1350
STEAMBOAT SPRINGS, COLORADO (970) 879-1523

Revisions - Date	Date 1/23/14	Drawn By SDS	Job No. 20452-00
	Scale 1"=50'	Checked By MES	Drawing No. IN FILE

H:\20452-00 BLCV\Survey\Sheets\Exhibits\20452-00ex09.dwg, 5/7/2014 11:16:45 AM

CITY OF BOULDER
Community Planning and Sustainability
1739 Broadway, Third Floor • P.O. Box 791, Boulder, CO 80306-0791
phone 303-441-1880 • fax 303-441-3241 • web www.bouldercolorado.gov

ADMINISTRATIVE REVIEW
NOTICE OF DISPOSITION

You are hereby advised that the following action was taken by the Planning Department:

DECISION:	Approved
DATE:	June 2, 2014
REQUEST TYPE:	Vacation/Easement
ADDRESS:	800 28th Street
APPLICANT:	Xavier Garcia
CASE #:	ADR2014-00082
LEGAL DESCRIPTION:	See Exhibit A.
DESCRIPTION:	EASEMENT VACATION to vacate a 25 foot utility easement along the west property line and running perpendicular to the 28th Street Frontage Road at 800 28th Street.

FINAL DECISION STANDARDS:
Approved as submitted. This application is approved per the criteria for Vacation of Public Easements as set forth in section 8-6-10, B.R.C. 1981. This approval does not constitute building permit approval.

This approval is limited to the vacation of a 25 foot utility easement, previously dedicated to the City of Boulder and recorded in Film 1235 as Reception No. 527442 in the Boulder County Records.

INFORMATIONAL COMMENTS:
Pursuant to section 8-6-10(b), B.R.C. 1981, approval of an easement vacation "is not effective until thirty days after the date of its approval. Promptly after approving the vacation, the manager will forward to the city council a written report, including a legal description of vacated portion of the easement and the reasons for approval. The manager will publish notice of the proposed vacation once in a newspaper of general circulation in the City within thirty days after the vacation is approved. Upon receiving such report and at any time before the effective date of the vacation, the council may rescind the manager's approval and call up the vacation request for its consideration at a public hearing, which constitutes a revocation of the vacation."

A 25 foot utility easement was dedicated on December 15, 1982 (Film 1235, Reception No. 527442). The utilities companies have consented to sign off on the request.

This decision is final and may not be appealed. A new request may be considered only as a new application.

Approved By: _____
Jonathan Woodward, Planning Department

INFORMATION PACKET
MEMORANDUM

To: Members of City Council

From: Jane S. Brautigam, City Manager
David Driskell, Executive Director of Community Planning and Sustainability
Susan Richstone, Deputy Director of Community Planning and Sustainability
Lesli Ellis, Comprehensive Planning Manager
James Hewat, Senior Historic Preservation Planner
Marcy Cameron, Historic Preservation Planner

Date: July 16, 2014

Call-Up Item and Extension of the Call-up Period: Landmark Alteration Certificate to construct a one-story, 425 sq. ft., two-car garage, remove a portion of the contributing garage, and construct a fence along the north, south, east and property lines at 730 Pine St. in the Mapleton Hill Historic District, per section 9-11-18 of the Boulder Revised Code 1981 (HIS2014-00087). This Landmark Alteration Certificate is subject to City Council call-up no later than **July 22, 2014**.

Executive Summary
The proposal to remove a portion of the contributing accessory building, construct a garage and construct fences along the south and west property lines at 730 Pine St. as shown on plans dated 05.27.2014 was approved by the Landmarks Board (4-0) at the July 2, 2014 meeting. The decision was based upon the Board's consideration that the proposed construction meets the requirements in Section 9-11-18, B.R.C. 1981.

Fiscal Impact
None. The review of landmark alteration certificates is an anticipated and ongoing function of the historic preservation program.

Community Sustainability Assessments and Impacts

- Economic: The Historic Preservation Ordinance was adopted to "...enhance property values, stabilize neighborhoods, promote tourist trade and interest, and foster knowledge of the city's living heritage" (9-11-1 (a), B.R.C., 1981). Owners of locally designated landmark properties are eligible for a variety of state and local tax credits for approved

rehabilitations and repairs, and studies have found that historic preservation adds to economic vitality and tourism. Changes to the exteriors of individually landmarked buildings require a Landmark Alteration Certificate, issued by the Department of Community Planning and Sustainability at no charge. This additional review process may add time and design expense to a project.

- Environmental: The preservation and conservation of historic resources is an environmentally sound practice and a sustainability tool. Existing buildings contain significant amounts of embodied energy. Numerous studies have shown that old buildings can be made as energy efficient to operate as new buildings. Owners of individually landmarked buildings are encouraged to reuse and repair as much of the original building as possible when making exterior alterations, thereby reducing the amount of construction waste of building materials deposited in landfills. City staff also can assist architects, contractors and homeowners with design and material selections and sources that are environmentally friendly.

- Social: The preservation of cultural resources is to the benefit of all of Boulder's citizens in that it fosters knowledge and an appreciation of the city's past and adds to the richness and diversity of the urban fabric. Owners of landmarked properties are required to go through the design review process to obtain a landmark alteration certificate and comply with the design guidelines for exterior changes to properties.

The board's approval is subject to a 14-day call-up period by City Council. However, the 14-day call-up period cannot be met due to the fact that the next regularly scheduled City Council meeting is on July 16, 2014.

Section 9-11-16(a) of B.R.C. 1981 states: "The City Manager may extend the call-up period until the council's next regular meeting, if the manager finds in writing within the original call-up period that the council will not receive notice of a decision of the board in time to enable it to call-up the decision for review."

The city manager finds that, because the next regularly scheduled City Council meeting is after the call-up period, it did not receive notice of the board's decision regarding 730 Pine Street in time to consider call-up within 14 days. Therefore, the City Manager extends the call-up period for this application until the City Council's next scheduled meeting on July 22, 2014.

Approved By:

Jane S. Brautigam,
City Manager

ATTACHMENTS:

A. Notice of Disposition dated July 2, 2014
B. Photographs and Drawings of 730 Pine Street

Notice of Disposition

You are hereby advised that on July 2, 2014 the following action was taken:

ACTION: Approved by a vote of 4-0.

APPLICATION: Public hearing and consideration of an application for a Landmark Alteration Certificate to construct a one-story, 425 sq. ft., two-car garage, remove a portion of the contributing garage, and construct a fence along the north, south, east and property lines at 730 Pine St. in the Mapleton Hill Historic District, per section 9-11-18 of the Boulder Revised Code 1981 (HIS2014-00087).

LOCATION: 730 Pine Street

ZONING: Residential Low – (RL-1)

APPLICANT/OWNER: Will Hentschel / Douglas and Jennifer Campbell

This decision was arrived at based on the purposes and intent of the Historic Preservation Code as set forth in 9-11-18, B.R.C., 1981, as applied to the Landmark Alteration Certificate application.

Applicant's Presentation
Jennifer Campbell, 730 Pine St., spoke in support of the landmark alteration certificate application.

Public Hearing
No one from the public spoke to this item.

Motion
On a motion by **M. Gerwing**, seconded by **K. Remley**, the Landmarks Board approved (4-0) the staff memorandum dated July 2nd, 2014, as the findings of the Board and approve the application for a Landmarks Alteration Certificate for the removal of a portion of the contributing accessory building, construction of a garage and construction of fences along the south and west property lines at 730 Pine St. as shown on plans dated 05.27.2014, subject to the following conditions:

Conditions of Approval

1. The applicant shall be responsible for ensuring that the development will be constructed in compliance with the application dated 05.27.2014 on file in the City of Boulder Community Planning and Sustainability Department, except as modified by these conditions of approval.

2. Prior building permit application and final issuance of the Landmark Alteration Certificate, the applicant shall submit revised plans for the proposed fences.

3. Prior to submitting a building permit application and final issuance of the Landmark Alteration Certificate, the applicant shall submit the following: final details showing door and window details, garage doors, roofing materials, siding, paving, fencing and proposed colors. These design details shall be reviewed and approved by the Landmarks design review committee, prior to the issuance of a building permit. The applicant shall demonstrate that the design details are in compliance with the intent of this approval and the General Design Guidelines and the Mapleton Hill Historic District Design Guidelines.

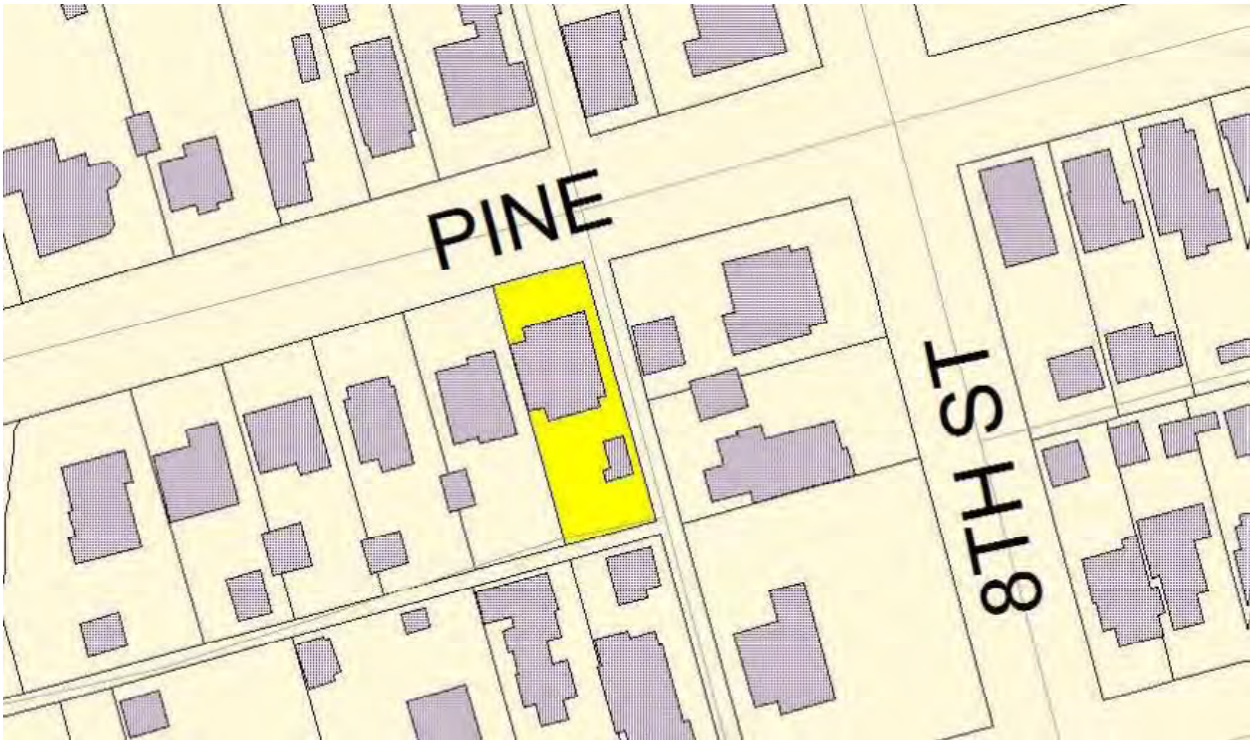

Figure 1. *Location Map, 730 Pine St.*

Figure 2. *730 Pine St., Tax Assessor Photograph, c. 1949*

Figure 3. *730 Pine St., Main House, 2013*

Figure 4. *730 Pine St. Accessory Building, northeast corner, 2014.*

Figure 5. *730 Pine St. Accessory Building, southeast corner, 2014*

Figure 6. *730 Pine St. Accessory Building, southwest corner, 2014*

Figure 7. *730 Pine St. Accessory Building, west wall, 2014*

Figure 8. *Rendering of proposed garage (left) and garage (right)*

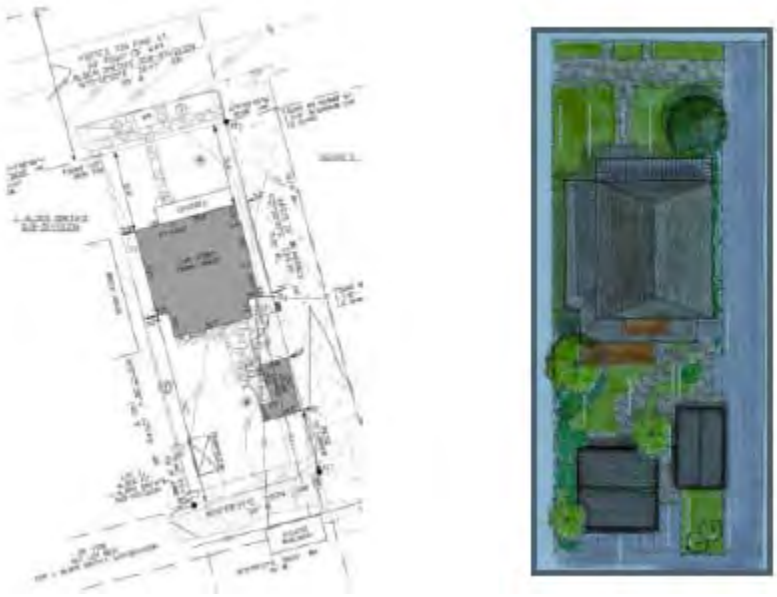

Figure 9. Existing (l) and proposed (r) site plans.

Figure 10. Proposed south elevation

Figure 11. Proposed east elevation (facing alley)

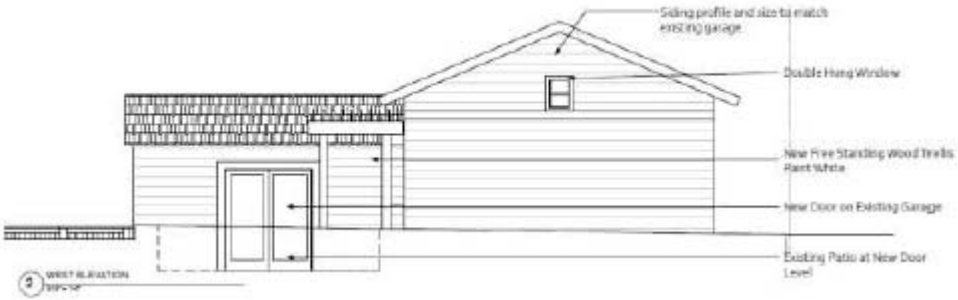

Figure 12. Proposed west elevation

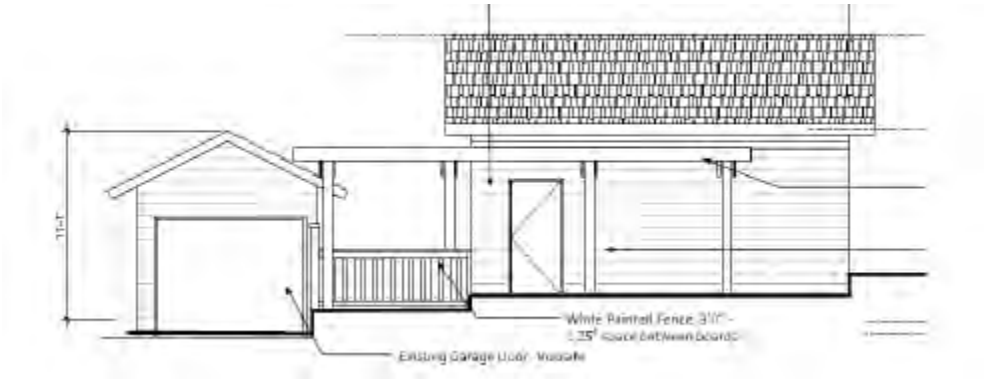

Figure 13. Proposed north elevation (interior lot)

Figure 14. Portion of contributing garage proposed for removal (hatched line)

Figure 15. Looking southwest along 700 block of Pine St. (730 Pine at left)

Figure 16. Existing concrete wall and wood fence at east side of property

INFORMATION PACKET
MEMORANDUM

To: Members of City Council

From: Jane S. Brautigam, City Manager
David Driskell, Executive Director of Community Planning and Sustainability
Susan Richstone, Deputy Director of Community Planning and Sustainability
Lesli Ellis, Comprehensive Planning Manager
James Hewat, Senior Historic Preservation Planner
Marcy Cameron, Historic Preservation Planner

Date: July 16, 2014

Call-Up Item and Extension of the Call-up Period: Landmark Alteration Certificate to construct a one-story, four car garage at the northeast corner of the lot where a four car garage was previously located on the landmarked property at 1507 Pine St., per section 9-11-18 of the Boulder Revised Code (HIS2014-00174). This Landmark Alteration Certificate is subject to City Council call-up no later than **July 22, 2014**.

Executive Summary
The proposal to construct a new, free-standing garage at 1507 Pine St. was approved by the Landmarks Board (4-0) at the July 2, 2014 meeting. The decision was based upon the Board's consideration that the proposed construction meets the requirements in Section 9-11-18, B.R.C. 1981.

Fiscal Impact
None. The review of landmark alteration certificates is an anticipated and ongoing function of the historic preservation program.

Community Sustainability Assessments and Impacts

- Economic: The Historic Preservation Ordinance was adopted to "…enhance property values, stabilize neighborhoods, promote tourist trade and interest, and foster knowledge of the city's living heritage" (9-11-1 (a), B.R.C., 1981). Owners of locally designated landmark properties are eligible for a variety of state and local tax credits for approved rehabilitations and repairs, and studies have found that historic preservation adds to economic vitality and tourism. Changes to the exteriors of individually landmarked

buildings require a Landmark Alteration Certificate, issued by the Department of Community Planning and Sustainability at no charge. This additional review process may add time and design expense to a project.

- Environmental: The preservation and conservation of historic resources is an environmentally sound practice and a sustainability tool. Existing buildings contain significant amounts of embodied energy. Numerous studies have shown that old buildings can be made as energy efficient to operate as new buildings. Owners of individually landmarked buildings are encouraged to reuse and repair as much of the original building as possible when making exterior alterations, thereby reducing the amount of construction waste of building materials deposited in landfills. City staff also can assist architects, contractors and homeowners with design and material selections and sources that are environmentally friendly.

- Social: The preservation of cultural resources is to the benefit of all of Boulder's citizens in that it fosters knowledge and an appreciation of the city's past and adds to the richness and diversity of the urban fabric. Owners of landmarked properties are required to go through the design review process to obtain a landmark alteration certificate and comply with the design guidelines for exterior changes to properties.

The board's approval is subject to a 14-day call-up period by City Council. However, the 14-day call-up period cannot be met due to the fact that the next regularly scheduled City Council meeting is on July 16, 2014.

Section 9-11-16(a) of B.R.C. 1981 states: "The City Manager may extend the call-up period until the council's next regular meeting, if the manager finds in writing within the original call-up period that the council will not receive notice of a decision of the board in time to enable it to call-up the decision for review."

The city manager finds that, because the next regularly scheduled City Council meeting is after the call-up period, it did not receive notice of the board's decision regarding 1507 Pine Street in time to consider call-up within 14 days. Therefore, the City Manager extends the call-up period for this application until the City Council's next scheduled meeting on July 22, 2014.

Approved By:

Jane S Brautigam

Jane S. Brautigam,
City Manager

ATTACHMENTS:

A. Notice of Disposition dated July 2, 2014
B. Photographs and Drawings of 1507 Pine Street

Notice of Disposition

You are hereby advised that on July 2, 2014 the following action was taken:

ACTION: Approved by a vote of 4-0.

APPLICATION: Public hearing and consideration of an application for a Landmark Alteration Certificate to construct a 925 sq. ft., one-story, four-car garage at the northeast corner of the property at 1507 Pine Street, an individually landmarked property, per section 9-11-18 of the Boulder Revised Code 1981 (HIS2014-00174).

LOCATION: 1507 Pine Street

ZONING: RMX-1 (Residential-Mixed 1)

APPLICANT/OWNER: Kristin Lewis / Susan Dawson

This decision was arrived at based on the purposes and intent of the Historic Preservation Code as set forth in 9-11-18, B.R.C., 1981, as applied to the Landmark Alteration Certificate application.

Applicant's Presentation
Susan Dawson, 662 Glen Way, Woodside, CA, prospective owner, introduced the project to the Landmarks Board and her plans for the house.

Kristin Lewis, 1928 14th St., architect, explained proposed changes to the house approved by the Landmarks design review committee, and the current proposal to construct a new garage building on the property.

Public Hearing
Abby Daniels, 1123 Spruce St. Executive Director of Historic Boulder, Inc., stated Historic Boulder's Preservation Committee support of constructing a four-car garage based upon the fact that a similar building was on the property historically.

Motion
On a motion by **K. Remley**, seconded by **M. Gerwing** , the Landmarks Board approved **(4-0)** the staff memorandum dated July 2, 2014, in matter 5C (HIS2014-00174), as the findings of the board and approve the construction of a new, free-standing garage as shown on plans dated May 29, 2014, finding that the plans generally meets the standards for issuance of a Landmark Alteration Certificate in Chapter 9-11-18, B.R.C. 1981, subject to the following conditions:

Conditions of Approval

1. The applicant shall be responsible for constructing the garage in compliance with the approved plans dated May 29, 2014, except as modified by these conditions of approval.

2. Prior to submitting a building permit application and final issuance of the Landmark Alteration Certificate, the applicant shall submit the following: final details showing door and window details, roofing materials, wall materials, proposed colors, hardscaping and fencing, including the proposed trash enclosure. These design details shall be reviewed and approved by the Landmarks design review committee, prior to the issuance of a building permit. The applicant shall demonstrate that the design details are in compliance with the intent of this approval and the *General Design Guidelines.*

Figure 1: 1507 Pine St. Tax Assessor Card photograph c.1929, showing original hipped roof. Photograph Courtesy the Carnegie Branch Library for Local History.

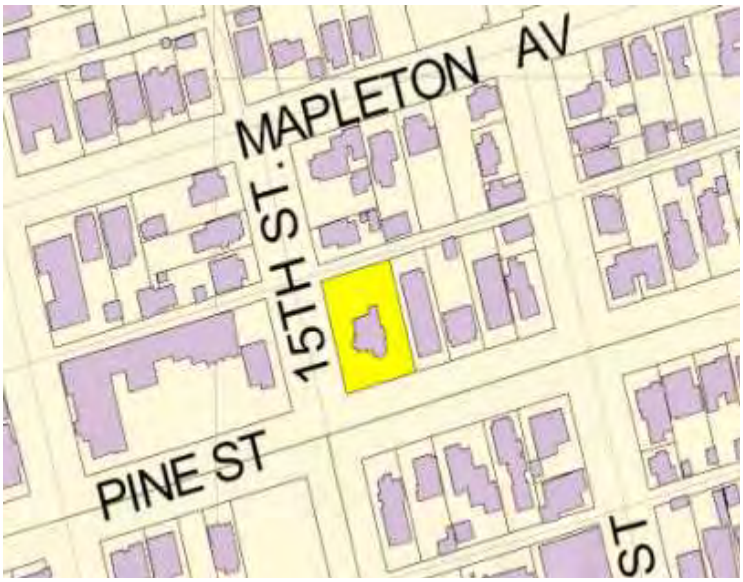

Figure 2: Location Map, 1507 Pine St.

Figure 3. 1507 Pine St., 1974.
Third story addition constructed in 1947, original porches removed.

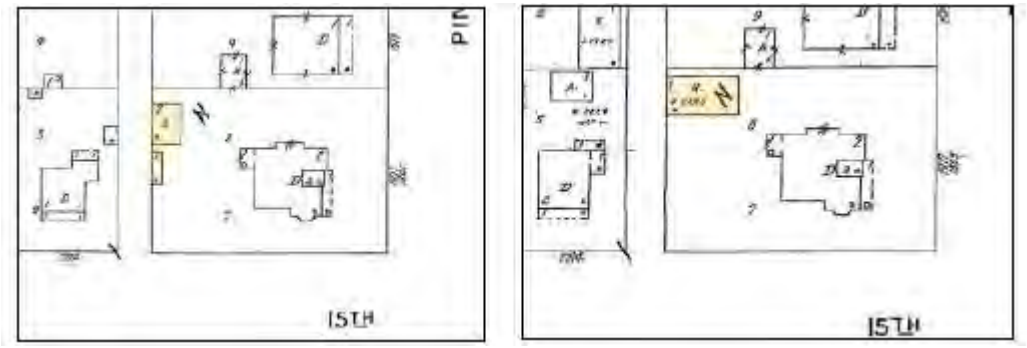

Figure 4. Sanborn Fire Insurance Maps, 1922 (L) and 1931-1960 (R).
Accessory buildings located along the alley (highlighted).

Figure 5. View from Lover's Hill showing accessory buildings at rear of lot, c.1898

Figure 6. 1507 Pine St., southwest corner, 2014.

Figure 7. 1507 Pine St., location of proposed garage from northwest corner of property, 2014.

Figure 8. 1507 Pine St., location of proposed garage, 2014.

Figure 9. 1507 Pine St., fence at north east corner of property, 2014.

Figure 10. 1507 Pine St., south elevation, 2014.

Figure 11: 1507 Pine St., facing east with alley in view on left, 2014.

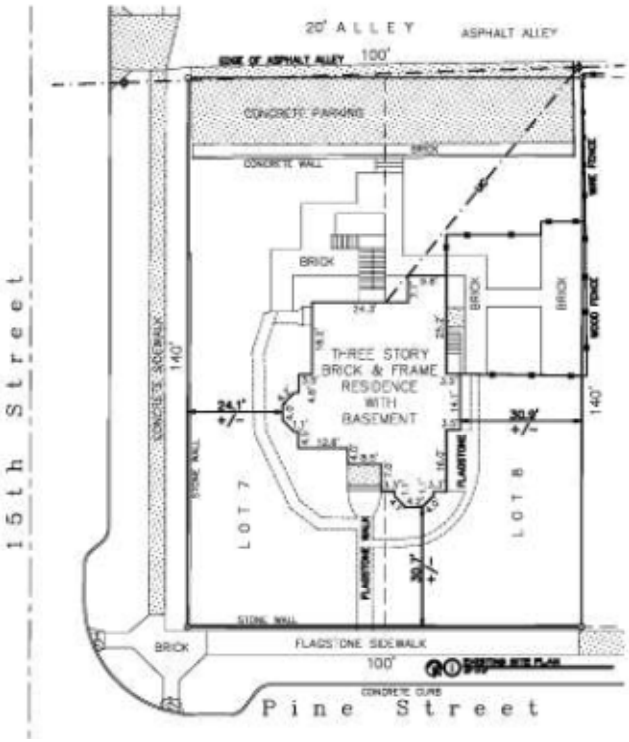

Figure 12: Existing Site Plan

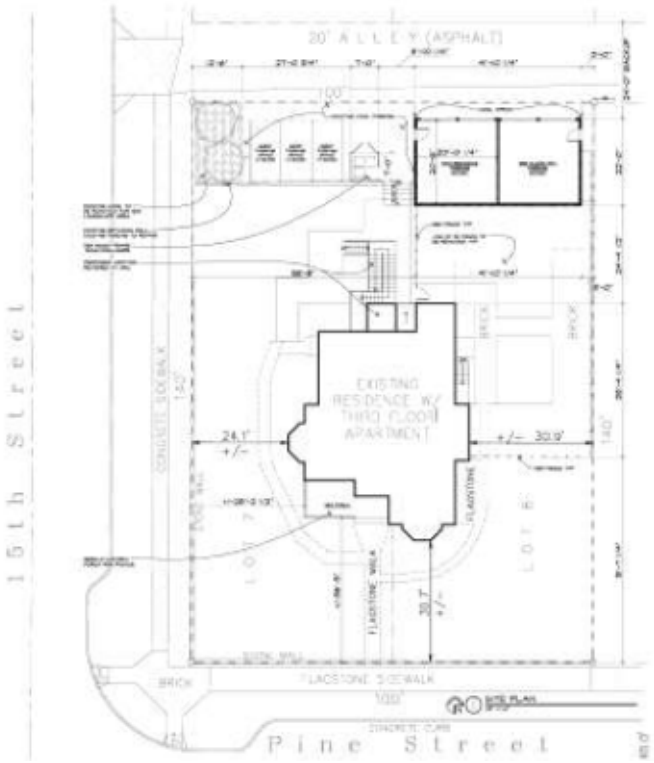

Figure 13: Proposed Site Plan

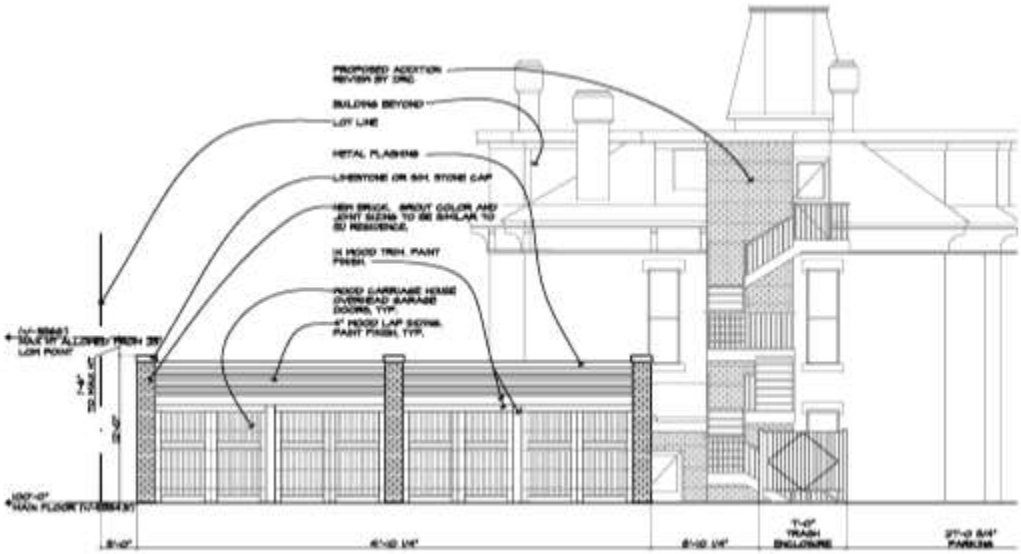

Figure 14: Proposed North Elevation (façade)

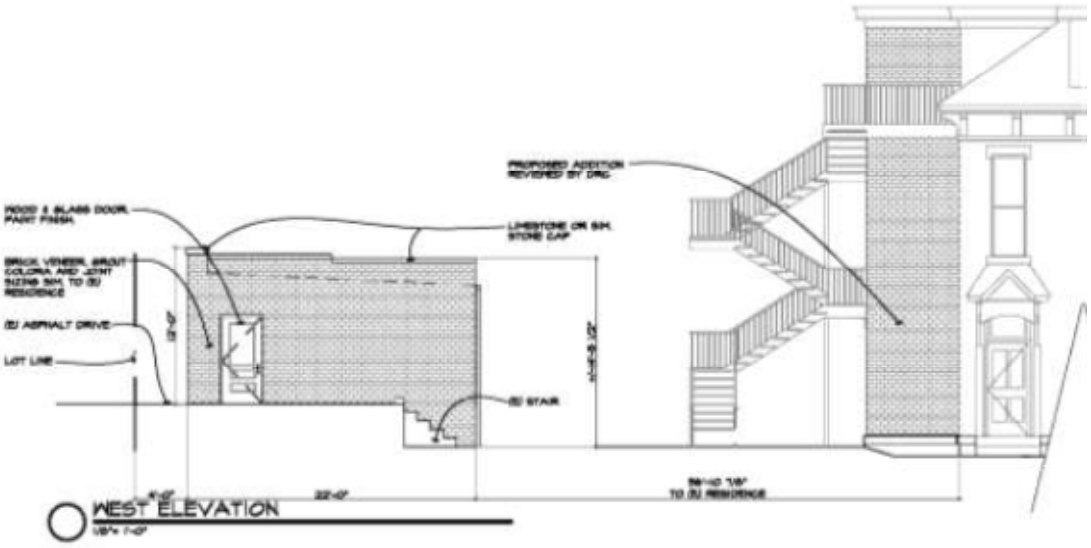

Figure 15: Proposed West Elevation

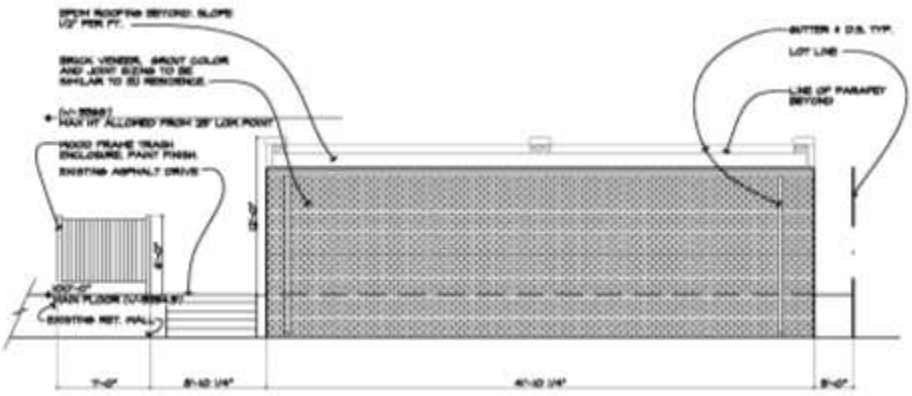

Figure 16: Proposed South Elevation

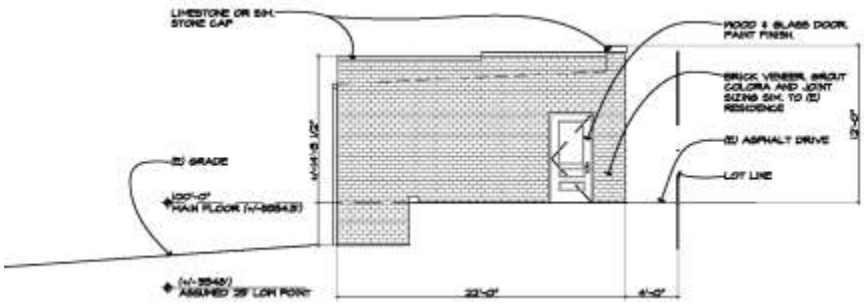

Figure 17: Proposed East Elevation

INFORMATION PACKET
MEMORANDUM

To: Members of City Council

From: Jane S. Brautigam, City Manager
Maureen Rait, Executive Director of Public Works, Flood Recovery Manager

Date: July 22, 2014

Subject: Information Item: Flood Recovery Status

September 2013 brought unprecedented rainfall to the region causing significant flooding and extensive damage to both private property and city infrastructure. This City Council information item provides an update on recovery status in relation to the key objectives for both near-term recovery and long-term resilience. Highlights of the progress made are listed below, by objective, with details provided in the body of the memorandum:

1. **Help people get assistance.**
   - The city and county were awarded $4 million in Community Development Block Grant-Disaster Recovery (CDBG-DR) housing rehabilitation grant funding to assist eligible homeowners in the reconstruction process.
   - Two flood-related emergency annexations are scheduled for Aug. 5, 2014. Remaining flood annexations to proceed in third quarter 2014.
   - Targeted outreach to neighborhoods and property owners with vacant and uninhabitable units continuing.

2. **Restore and enhance our infrastructure.**
   - As of June 30, the city has spent approximately $15.1 million on flood recovery.
   - In terms of costs, with remaining work estimated at $12.2 million, recovery efforts are 55 percent complete.
   - The revised cost estimate of $27.3 million (down from $47 million in October 2013) represents staff's current estimates of flood damage and recovery activities after further investigation of damages and assessment of repair and recovery alternatives. These costs are related to the specific Sept. 2013 flood damages and are not reflective of subsequent issues with additional sediment and debris during spring runoff and summer storms.

3. **Assist business recovery.**
   - The city is continuing to assist businesses with remaining flood recovery needs.

4. **Pursue and focus resources to support recovery efforts.**
   - The city has received $121,000 in FEMA reimbursements to date; pace is expected to increase in third quarter.
   - The city was awarded $76,000 under the CDBG-DR Resiliency Planning Program.
   - The city is pursuing additional CDBG-DR funds in Rounds 2 and 3 ($257 million available).

5. **Learn together and plan for the future.**
   - The city and countywide partners are launching "BoCo Strong" and planning a series of commemoration events in September.
   - The proposed Capital Improvement Program (CIP) includes projects that help mitigate future rainfall/runoff event impacts. City Council will review the CIP as part of the 2015 budget and CIP process.

City staff, consultants and community partners continue to work diligently to make progress in achieving the council-adopted objectives. Each objective is explained in the following pages along with a high-level summary of progress. More detailed information can be found at the city's comprehensive resource for all flood-related information: www.BoulderFloodInfo.net. City Council was briefed previously on May 6, 2014 and that information can be found here. City department directors and staff supporting flood recovery efforts will also be available to address questions at the Flood Recovery briefing immediately before the regular City Council meeting on July 22.

To continue to support the flood recovery efforts, the city created a high-level team that meets on a regular basis to address recovery activities (see diagram here). The Flood Recovery Steering Committee includes executive team members and department directors from the most highly impacted departments.

City Council briefings and updates are expected to be provided on an as needed basis throughout 2014. The next briefing is tentatively scheduled for Oct. 28, 2014.

UNINHABITABLE, VACANT UNITS & REBUILDING

The city continues to help residents in need of assistance as they recover from the flood. Since the last briefing, the city became aware of additional units that were vacant or uninhabitable, and some units on the list began construction. The city's latest estimate is that approximately 50 housing units continue to remain vacant and/or uninhabitable as a result of the flood. Direct outreach and workshops with neighborhoods and property owners that remain vacant continues, and a series of workshops will be scheduled based on specific needs. For example, the neighborhood with the largest number of concentrated uninhabitable units have requested workshops to focus on funding and assistance for property owners and the HOA, building permits and reconstruction, and flood mitigation along Wonderland Creek. These will be held through the end of July and beginning of August.

The Planning & Development Services Center continues to see 10-12 customers per week with flood-related questions and those seeking permits for repairs due to flood damage or mitigation measures. Since Sept. 11, 2013 the city has processed more than 760 flood-related building permits. Since the last council briefing in May, 20 flood recovery permits have been processed, including repairs to the Frasier Meadows Community Health Center.

INDIVIDUAL ASSISTANCE, REBUILDING & CASE MANAGEMENT

The city and the Long-Term Flood Recovery Group of Boulder County (LTFRG) are coordinating and cross-training to connect residents with resources and case management services, and provide streamlined access to city resources. City staff and LTFRG continue to have bi-weekly coordination meetings.

Approximately 155 Boulder households have requested assistance with the LTFRG and remain as active cases. The direct assistance provided by case managers includes assisting with FEMA individual assistance and insurance appeals, mental health programs, volunteer and non-profit labor coordination, construction coordination, funding assistance through the United Way Flood Relief Fund (soon to include the CDBG-DR housing rehab funding as well), as well as connections to other agencies for technical assistance.

Seventy-eight percent of Boulder households with open cases report incomes below $25,000. Nearly half of the 155 households reported a need for financial assistance. Almost one in three of those with financial needs reported significant long-term financial concerns. For households determined to have unmet needs, the median estimate of unmet need is $25,000, ranging between $380 and $380,000.

Home rehabilitation was the second largest category of need reported; 42 percent of cases had ongoing home repair needs. Some residents reported issues with their yards such as failing retaining walls and storm debris. Others sought assistance with mental health and/or disaster trauma (9 percent of cases); assistance finding permanent housing (9 percent of cases); assistance or support navigating recovery hurdles such as insurance claims (8 percent of cases); and assistance finding employment in order to recover financially(6 percent of cases). Other households reported complications related to living in an HOA and struggles with insurance. A handful of residents reported concerns about nearby natural hazards such as debris deposits in waterways.

The City of Boulder and Boulder County obtained $4 million in grant funding for housing rehabilitation and temporary rental assistance through Community Development Block Grant-Disaster Recovery (CDBG-DR) countywide (excluding Longmont). Contracts are currently being signed, and initial outreach letters to potentially eligible applicants are being sent out at the end of July. This funding and construction management will be administered through Boulder County and Longs Peak Energy Conservation. At least seventy-five percent of the funding is required to be used to assist low and moderate income property owners (80 percent of AMI and under) that still have an unmet need to complete housing repairs to single family homes and buildings with eight units or less, not in the floodway (city conveyance zone).

CUSTOMER SERVICE & COORDINATION

City staff is receiving approximately three flood-related Inquire Boulder service submittals per week, and six phone calls daily to the Flood Information Line (303-441-1856). During rainfall events, there is an increase in phone calls. The most common questions are related to floodplains, and continued groundwater and localized flooding concerns.

The city is actively participating and coordinating with state and countywide efforts including case management, business assistance, resilience and capacity building, housing, and CDBG-DR funding.

FLOOD RELATED ANNEXATIONS

Two emergency annexations for properties with failing well and septic systems will be considered by City Council on Aug. 5. Approximately 15 additional properties have signed annexation petitions using the streamlined flood recovery process. The two neighborhoods where infrastructure installation is required (Old Tale Road and Githens Acres) were surveyed for their level of interest in a group annexation. The interest in annexation was less than 50 percent. However, several residents were interested if the city could obtain grant funding to assist in paying for the underground infrastructure or costs to connect to the utility main lines. The city is

waiting to hear if grant funding will be approved to construct the infrastructure for at least one of the two neighborhoods.

CDBG-DR GRANT FUNDING

CDBG-DR funding coordination is continuing countywide for the second round of funding ($199 million for Colorado). The city is working with state and regional partners to explore a more predictable, expedited and customized process for allocating this second round of funding. Additionally, on July 14, Senators Udall and Bennet announced the release of a third round of CDBG-DR funds for an additional $52.8 million, bringing a total of $320.3 million in disaster funding to Colorado. The city will continue to work with its partners to develop a strategy for this third round of funding when more information is available. Staff will continue to update council on the progress and funding awarded through the CDBG-DR process.

Header photos taken at the March 31, 2014 Flood Preparedness + Recovery open house.

FLOOD RECOVERY PROJECT STATUS

As a result of the significant flood damage to city infrastructure, the city is working to complete approximately 300 projects across the community that includes repairs, restoration, replacement and mitigation work. To fund these projects, the city is pursuing a variety of available resources in the recovery and reimbursement process including insurance, FEMA assistance, and other federal agencies (e.g., Federal Highway Administration, Urban Drainage & Flood Control District, Colorado Water Conservation Board, etc.), as further described in Objective #4.

Below is a summary of the total projects by Department/ Division. Projects are considered partially complete if work has been started, temporary repairs have been made or mitigation work has yet to be completed. As of July 1, 2014, the city has completed 64 percent of the flood-related projects and spent $15 million on flood recovery (see more financial details on page 12). Additional mitigation projects that are not part of the FEMA reimbursement process will be reviewed by City Council through the Capital Improvement Project (CIP) process.

	Total Flood Related Projects	Percent Complete
Citywide Total	**331**	**64%**
Department/Division		
OSMP	153	53%
Parks & Recreation	45	76%
PW - Utilities	67	90%
PW - Transportation	32	53%
PW - FAM/Fleet	34	59%

Department-specific details are provided below.

OPEN SPACE AND MOUNTAIN PARKS (OSMP)

Seasonal crews and fair weather have significantly increased the pace of flood recovery on OSMP lands. Since the last update, public access has been restored to the Saddle Rock trail that now includes a temporary and innovative solution to traversing some difficult terrain—a 20-foot steel ladder anchored into rock. Trails at Royal Arch and Boulder Falls remain closed as staff and consultants work on sustainable solutions to repair the damages and provide safe and sustainable access. Access is disrupted along the South Boulder Creek Trail just upstream of South Boulder Road where installation of a new bridge is scheduled. However, visitors are using the roadway bridge to traverse the creek. A summary of OSMP flood-related projects is shown in the table.

PROJECT STATUS	NUMBER OF PROJECTS
Completed	81
Partially Completed	27
Planning/Design	45
TOTAL	**153**

Staff is also working to address erosion and deposition on designated trails that are open, working with regulatory agencies, and contractors to design, gain clearance for and re-construct sustainable trails at approximately 20 locations including Chapman Drive and the Sanitas Valley. Although the Gregory Canyon Trailhead access road remains closed, visitors can access the trail head from the Baseline Trail. The trailhead access road repair will be timed to coincide with the re-opening of Flagstaff Road as part of a cooperative project with Boulder County Transportation.

Staff worked successfully to ensure that that all irrigation ditches serving OSMP were ready to distribute water at the start of the irrigation season to the farmers and ranchers leasing open space land and to others served by those ditches. Grant funding from the Colorado Water Conservation Board (CWCB) to the city and the Green Ditch Company, which received support from CWCB, has facilitated this work. And although there is significant competition for contractors, OSMP continues to repair fences, keeping up with the agricultural management plans and moving livestock to maintain the productivity and ecological health of OSMP grasslands. Volunteers continue to be the main source of help in clearing debris off fences.

In response to FEMA's determination that habitat restoration projects were beyond the scope of their recovery mandate, OSMP ecologists have identified cooperative projects with other agencies, other funding sources, and have prepared grant applications to support post-flood integrated pest management, bank restoration, and repairs to past aquatic habitat improvements. The remains of a collapsed bridge in Boulder Creek near 57th Street were removed to assist with riparian restoration and reduce boating hazards in Boulder Creek.

As the majority of OSMP lands are located in unincorporated Boulder County, OSMP staff has been coordinating with Boulder County's recovery and watershed planning efforts—mostly along Left Hand Creek, Boulder Creek and Fourmile Canyon Creek. OSMP will continue its focus on flood recovery projects over the next 2-3 years.

PARKS AND RECREATION

Approximately 34 percent, or 35 of the 98 Parks and Recreation facilities were significantly damaged by the flood. Recovery work includes repair, restoration and/or replacement of facilities, structures, playgrounds, multi-use fields and courts, and paths.

PROJECT STATUS	NUMBER OF PROJECTS
Completed	34
Partially Completed	8
Planning/Design	3
TOTAL	**45**

Parks and Recreation staff continues to implement flood recovery and restoration projects across the community with approximately 76 percent of the projects complete. The department had 45 distinct projects due to flood damage and has currently completed 34 with eight partially completed. The three remaining projects that are currently in planning and design with FEMA coordination include:

- Eben G. Fine Park – restoration and stabilization of south hillside due to erosion from floodwaters;
- Knollwood Tennis Courts – courts were damaged and need complete replacement in addition to replacement of walls and landscape restoration; and
- Evert Pierson Memorial Kids' Fishing Ponds – full restoration of ponds and associated park amenities.

The department anticipates that all projects will be complete within the next 7 to 10 months.

UTILITIES

Although the water utility infrastructure performed admirably and sustained minimal damages, the wastewater, stormwater and major drainageway systems were overwhelmed by floodwaters and runoff, groundwater infiltration and inflow to the city's open channel and pipe conveyance systems. Initial flood response work included the protection of critical wastewater as well as vulnerable water delivery pipelines and access roads to critical water infrastructure. Recovery work includes:

- Inspecting and cleaning selected wastewater and stormsewer pipe segments;
- Reconstruction of improved drainageway features, which requires the removal of significant amounts of sediment and debris; and
- Stabilization and repair of undermined and damaged pipes.

PROJECT STATUS	NUMBER OF UTILITY PROJECTS			
	WATER	WASTEWATER	STORMWATER/FLOOD MANAGEMENT	TOTAL
Completed	21	15	24	**60**
Partially Completed	0	1	3	**4**
Planning/Design	1	2	0	**3**
TOTAL	**22**	**18**	**27**	**67**

Utilities staff continue to implement flood recovery and restoration projects for the water, wastewater and stormwater/flood management utilities. Approximately 90 percent of the recovery work is complete. Work on all critical water and wastewater infrastructure is complete. Sediment and debris removal from major drainageways is complete. Repair of drainageway features such as drop structures and retaining walls is more than 50 percent complete and should be completed by the end of the summer. Sediment and debris removal from the wastewater is 90 percent complete and will likely be complete by the end of 2014. Sediment and debris removal from the stormsewers is estimated to be approximately 50 percent complete and will likely not be complete until early next year. Utilities maintenance staff continues to clear flood-related blockages as they are discovered and as they are reported by the community.

TRANSPORTATION

Due to the flood, approximately one percent or three miles of roadways were damaged citywide. There are approximately 300 miles of roads that exist within the City of Boulder. It is estimated that approximately 20 percent or 60 miles of the roads were covered in debris. The city also has 60 miles of bike path within the city limits. Approximately 15 percent, or nine miles, of the path was damaged.

PROJECT STATUS	NUMBER OF PROJECTS[1]
Completed	17
Partially Completed	14
Planning/Design	1
TOTAL	**32**

All transportation facilities are available for full use by the public, although some intermittent closures of underpasses are expected due to high flows on the creek. Many of the remaining Transportation projects include construction activities within or adjacent to the Boulder drainageways. As a result, Transportation is targeting late summer or fall for these improvements when water levels subside. The remaining Transportation projects include:

[1] Projects include FEMA and Federal Highway Administration (FHWA). FEMA oversees the disaster relief federal funding for the street system that carries lower volumes, or residential streets, and FHWA, through Colorado Department of Transportation (CDOT), oversees the federal funding for streets that have higher volumes.

- Table Mesa/Lehigh – channel stabilization, reconstructing drop structures and repairing pavement.
- Fourmile Canyon Creek at Violet, 19th and 26th – primary work is complete and only minor revegetation remains.
- 47th Street at Fourmile Canyon Creek – primary work is complete and only fencing replacement, revegetation, and minor channel inlet riprap adjustments remains.
- Various Street Locations – complete final asphalt resurfacing on flood damaged streets.
- Hawthorn – west of 4th Street – primary work is complete and only minor street repair on city portion of Hawthorn remains.
- Boulder Creek at 4141 Arapahoe – removal of a piece of displaced concrete.
- Boulder Creek east of 55th St. – repairs to the rip rap protecting the abutments of the pedestrian bridge.

Transportation staff anticipates that all projects will be complete within the next 7 to 10 months.

FACILITIES AND ASSET MANAGEMENT (FAM): BUILDINGS AND STRUCTURES
Of the 365 city-owned buildings and structures approximately 34, or nine percent, were damaged due to the flood.

PROJECT STATUS	NUMBER OF PROJECTS
Completed	20
Partially Completed	11
Planning/Design	3
TOTAL	**34**

The majority of building and structural repairs (59 percent) have been completed. Following FEMA approval, mitigation work, such as installing sump pumps, rerouting roof drains, and adding flood walls and doors, will be completed at the following facilities:
- Fire Stations #1 and #4;
- West Senior Center;
- Reynolds Library;
- Main Library;
- Iris Center; and
- North Boulder Recreation Center.

Additional flood recovery projects include:
- South Boulder Recreation Center – selecting the type of material to replace the gymnasium floor and completing the replacement.
- Valmont Butte – complete reseeding per the requirements of the Voluntary Cleanup Program.
- 1888 Violet Ave. – demolish the flood damaged single-family residence that housed the Wildland Fire crew (known as the “cache”), as mentioned in a previous “Heads Up” to

City Council. A new wildland fire station is being built as part of the 2011 voter-approved Capital Improvement Bond.

The department anticipates that all flood-related projects will be complete over the next 7 to 10 months.

Header photos taken on April 2, 2014 as crews worked to reconstruct drop structures on Boulder Creek, just west of the Broadway bridge and South Boulder Creek, off Table Mesa Road.

The city continues to assist businesses with flood recovery needs. Impacts to Boulder businesses ranged from moderate damage (businesses that were repaired in a few weeks) to severe (e.g. complete demolition of a building with 20 tenants at 100 Arapahoe Avenue). Business assistance inquiries have included unique requests to specific Boulder businesses (e.g. disposal of confidential but severely damaged documents) and questions about funding sources and business resources.

PARTNER AGENCY COORDINATION

The city is a participant on the Business Recovery working group of the Long-Term Flood Recovery Group of Boulder County. This group is focused on outreach and assistance for unmet needs of small businesses. In addition, the city is participating and assisting the U.S. Economic Administration in identifying best practices and opportunities for integrating economic resilience into disaster recovery efforts based on experiences of the 2013 flood.

TOURISM GRANT

The city assisted the Boulder Convention and Visitors Bureau in completing a tourism and marketing grant application that was submitted to the State of Colorado on June 27. The grant funding comes from HUD through CDBG-DR.

Header photo taken at the March 31, 2014 Flood Preparedness + Recovery open house and event flyer image from the Business Flood Recovery meeting.

Due to the September 2013 flooding, the city was declared a national disaster and created the opportunity for possible reimbursement through FEMA, Federal Highway Administration (FHWA) and the State of Colorado. The city is striving to maximize reimbursement from all applicable agencies as well as through grant funding opportunities.

FINANCIAL RESOURCES

Due largely to the city's reserve policies and ability to flex repair dollars, the city has been able to fund the emergency response and initial recovery investments. Through the budget process, longer term plans will need to include replenishing the portion of reserves used that are not addressed by reimbursement. In the 2013 budget, the city used $6.8 million of reserve funds, approved through a budget supplemental on Dec, 3, 2013. In the 2014 budget, $1.6 million of reserve funds were approved through the budget supplemental on June 3, 2014. Discussions related to reserve funds for 2015 will occur as part of the Capital Improvement Program (CIP) and budget process.

Tables 1 and 2 illustrate, by Department/Division, the anticipated city share in the flood recovery costs as well as the estimated amount of reimbursement back to the city. The initial forecasts of flood recovery costs represented departments' "worst case" estimates of flood damage at a time when it was difficult to access and view all of the damaged sites. The revised cost estimate of $27.3 million (down from $47 million in October 2013) represents staff's current estimates of flood damage and recovery activities after further investigation of damages and assessment of repair and recovery alternatives. Please note that these costs are related to the specific Sept. 2013 flood damages and are not reflective of subsequent issues with additional sediment and debris during spring runoff and summer storms.

To date, FEMA has obligated (approved) $11 million worth of recovery projects. The current estimate for remaining projects yet to be obligated is approximately $4 to $5 million. As of July 1, the city has received $121,031 in reimbursements. As administrator of the FEMA public assistance grant, the State of Colorado is responsible for reviewing and approving reimbursement requests. The reimbursement process is moving slowly as the state fine tunes its process, but

staff expects the pace of reimbursements to accelerate through the end of the year. Final closeout of project worksheets, which includes an audit process, is anticipated to take three to five years. It is important to note that after FEMA projects are completed, FEMA may still "de-obligate" expenses based upon the results of a post-close audit and require a refund. FEMA representatives have indicated that in a typical disaster, up to 5 percent of an applicant's expenses may be de-obligated through this process.

The city has also received $2.7 million in insurance proceeds related to the flood event. The FEMA reimbursement process nets out insurance proceeds from reimbursements as a "duplication of benefits" if the applicant's insurance policy covers flood related damage. Table 2 shows the allocation of $1.6 million of insurance payments on listed properties (that is specifically tied to an individual asset). For the purposes of this update, most facility damages and related revenues are reflected in the FAM/Fleet department, regardless of the facility's use (e.g. recreation centers, although parts of Parks and Recreation's operations, are FAM facilities). The remaining $1 million in insurance proceeds is related to "unscheduled property," which refers to property and equipment that is not specifically inventoried in the insurance policy, but is nonetheless covered.

REMAINING COST TO THE CITY (GAP)

While FEMA and the state typically reimburse 87.5 percent of eligible projects (75 percent and 12.5 percent, respectively), in many cases, the city's gap between incurred costs and estimated reimbursements varies significantly. The most common reasons for this gap are:

- Through policy, FEMA has deemed many flood recovery activities ineligible (e.g. ecological restoration activities in OSMP, debris removal in certain areas of the streams).
- FEMA policies generally do not reimburse for regular staff time for flood response and recovery activities (only overtime is eligible). While project management and direct administrative costs are reimbursable, actual "boots on the ground" time is typically limited to overtime labor.
- Costs related to general administrative activities (not associated with a particular project) are ineligible for reimbursement. (e.g., general flood coordination meetings, reporting, budgeting, council updates, etc.)

Table 1: Costs Related to Flood Damage and Response

	Total Flood Damage and Response	Amount Spent	Remaining Estimated Cost
Transportation	2,500,000	1,925,968	574,032
Utilities	9,000,000	6,736,056	2,263,944
FAM/Fleet	1,900,000	828,842	1,071,158
OSMP	8,800,000	1,160,405	7,639,595
Parks & Rec	1,600,000	896,949	703,051
CP&S	1,777,604	1,777,604	-
Police	743,206	743,206	-
Fire	112,009	112,009	-
Other	895,732	895,732	-
Total	**$27,328,552**	**$15,076,770**	**$12,251,781**

Table 2: Sources of Funds for Flood Recovery and Response

	Actual FEMA/State/ FHWA Reimbursement	Estimated Reimbursement from FEMA/State/ FHWA[1]	Insurance Proceeds[2]	Total Reimbursement	Remaining Cost to City (Gap)[3]	Total Sources of Funds
Transportation	61,231	1,447,000		1,508,231	991,769	2,500,000
Utilities	-	7,469,000		7,469,000	1,531,000	9,000,000
FAM/Fleet	21,482	302,000	1,422,388	1,745,870	154,130	1,900,000
OSMP[4]	-	3,463,000	25,097	3,488,097	5,311,903	8,800,000
Parks & Rec	22,720	860,000	186,812	1,069,531	530,469	1,600,000
CP&S	15,598	1,376,000		1,391,598	386,006	1,777,604
Police	-	248,000	4,963	252,963	490,243	743,206
Fire	-	94,000		94,000	18,009	112,009
Other	-	78,000		78,000	817,732	895,732
Total	**$ 121,031**	**$ 15,337,000**	**$ 1,639,260**	**$ 17,097,290**	**$ 10,231,261**	**$ 27,328,552**

[1] Actual reimbursement amounts may vary due to actual costs incurred and/or FEMA de-obligation of costs at project closeout. Includes 1.34 percent management cost reimbursement.
[2] Insurance proceeds do not reflect $1 million unscheduled property payment. The city is still determining best use of these funds. FEMA may require that some or all of this payment be used to offset "duplication of benefits." This would result in a reduction of the FEMA reimbursement.
[3] Please refer to the following sections (Insurance, Remaining Cost to City, and Grants) for an overview of the reasons contributing to the gap, and the additional funding sources being pursued by the city to help close the gap.
[4] The majority of OSMP project worksheets have been written on estimates. As recovery work and reimbursements progress, the actual reimbursement from FEMA and the state may increase, as long as work performed is consistent with the project scope and costs are determined to be reasonable by FEMA.

GRANTS
To help close the above mentioned gap between flood damage and response costs and FEMA reimbursements, the city is pursuing additional funding sources. The following table provides a brief overview of the opportunities currently being pursued.

Program	Eligible Activities
CDBG-DR – Resiliency Planning (**Grant Awarded for $75,625**)	• West Fourmile Creek Annexation & Redevelopment Study
CDBG-DR - Infrastructure	• FEMA local match • Hazard Mitigation • Watershed protection and resilience
Colorado Water Conservation Board – Stream Restoration Grant	• Debris removal • Stabilize stream channels • Habitat restoration
FEMA Hazard Mitigation Grant Program	• Hazard mitigation planning • Hazard mitigation projects (property acquisition, structure elevation, dry-flood proofing, generators, etc)
Urban Drainage and Flood Control District (UDFCD)	• Repair of structures built by UDFCD
Workforce Boulder County	• Temporary employees to assist with flood recovery projects (repairs, debris removal, etc.)
Natural Resources Conservation Service (NRCS) Emergency Watershed Protection Program	• Debris removal • Streambank stabilization • Repair of water control structures and infrastructure

Council will be up-to-date with any major grant awards received and will receive an update on the status of additional funding as part of the next Flood Recovery Update scheduled for October 28.

VOLUNTEERS
Since September, the city has been very fortunate to have a significant level of support by volunteers, with approximately 1,800 volunteers logging more than 7,300 hours. Of those hours, 5,864 are eligible for FEMA reimbursement, with a projected value of $85,000.

Upcoming events for public volunteer assistance can be found online here: www.ow.ly/pfF4Y.

Header photos taken at OSMP flood recovery volunteer projects in October 2013.

BOCO STRONG
The city is coordinating with a countywide committee through the Long-Term Flood Recovery Group of Boulder County on a series of events to commemorate the one year anniversary of the flood. The events will be branded as "BoCo Strong", and will be held throughout Boulder County by various jurisdictions and community partners. A county wide event calendar and website is located at www.bocostrong.org.

PRE-DISASTER RECOVERY PLANNING
City staff and the Office of Emergency Management is compiling the lessons learned to date, as well as areas of success and improvement to begin planning and coordination for a more robust recovery plan, which will continue through 2015.

COMMUNITY RESILIENCE CONVERSATIONS
The resilience subcommittee of the Long-Term Flood Recovery Group of Boulder County is planning more than 40 facilitated community conversations about the resilience of individuals, neighborhoods, and sectors of the community across Boulder County. The information collected through these workshops will be compiled and shared as part of the BoCo Strong commemoration events in September. The conversations will be held throughout July and August, and are being coordinated and integrated with city staff and the city's resilience planning efforts.

2015 BUDGET & CAPITAL IMPROVEMENTS PROGRAM
The flood disaster highlighted certain vulnerabilities in the city's infrastructure and delayed some Capital Improvement Projects (CIP) as funds were redirected to respond to the flood. As a result, city staff is in the process of reprioritizing the proposed CIP that contemplates additional work to help mitigate future rainfall/runoff event impacts. City Council will review these projects as part of the 2015 budget and CIP process.

Header photos taken at the April 2, 2014 Flood Preparedness + Recovery open house.

BLA ANNUAL RETREAT

NOTES

4/29/2014 1-5 pm

Fishbowl Conference Room

DIRECTIVES:

1. Steve would like guidelines as to statements/declarations that would strengthen board's position i.e. "I find that the applicant has or has not . . ." or "I find that the needs and desires met or not met", etc. Sandra is going to meet w/Steve & Dave to conduct Chair & Vice Chair training on 5/9/2014 2 PM (regarding admissibility of evidence, handling objections). Maybe they could also discuss Steve's request for guidelines?
2. Needs & Desires – Steve made statement that liquor store in defined neighborhood opposition given less weight because a competitor. Colorado Liquor Code 12-47-301(2)(a).
3. Majority of board want Carlene to submit what she sees as mitigating/aggravating factors along with her paperwork for show cause. Sent email to Carlene 5/2/2014, she has agreed to do that.
4. RHG – back on the agenda, provide BLA update on education, no lobbying, 5 minutes. Michele has contacted RHG and Michael Absalom will be at May 21 hearing.
5. Overservice – Carlene agreed to conduct overservice class within next 8 months. Scheduled for June 3, 10:30 am - 2:30 pm in Council Chambers. Carlene will provide licensing with flyers to mail out to licensees. BLA members want to be invited to class. When we receive the flyers, Michele will send email w/flyer to board members.
6. Rotating speakers – keep on agenda in addition to RHG. Michele asked board members for more suggestions for speakers and followed up with email. Dave Timken replied with suggestion. Michele contacted that individual on 5/1 but has not heard back yet.
7. Mitigating/Aggravating factors – lots of discussion. Board wants to continue discussion during a hearing. Mishawn is putting on May 21 agenda. Continued to June 24, 2014 hearing.
8. Transfer to Landlords – Poster on dark liquor establishments notifying public of liquor license. Mishawn drafted language for poster, Sandra approved. Michele will take to Kinko's to have copies made. Mishawn will put on June 24 agenda – good to include reference in the Rules. Also, if approve transfer to landlord put on nonadministrative renewal – also include on June 24 agenda and include reference in the Rules.
9. Training requirements – changed from 6 to 3 months. Will require council approval and updating of Rules of Procedure. Discuss at June 24 BLA hearing.
10. Tim will draft something, send it to Harriet to review. Believe it will be one page information sheet for licensees; Tim will clarify. Michele sent reminder email to Tim & Harriet.

11. Known habitual drunkard – board agreed good idea to educate licensees that they have the right to refuse service without providing a reason. No other follow up decided upon.
12. Beginning date for suspension dates? Discussed and decided to revisit. Mishawn will put on May 21 agenda. Continued to June 24, 2014 hearing.

The Beverage Licensing Authority reviewed this document, made minor edits, at their May 21, 2014 hearing.

CITY OF BOULDER
BEVERAGE LICENSING AUTHORITY
*** * * MINUTES * * ***
TUESDAY, JUNE 24, 2014, 3:00 P.M.
CITY COUNCIL CHAMBERS
MUNICIPAL BUILDING – 2ND FLOOR
1777 BROADWAY, BOULDER, COLORADO

DRAFT

NAME OF BOARD/COMMISSION: Beverage Licensing Authority (BLA)

DATE OF MEETING: June 24, 2014

NAME & PHONE OF PERSON PREPARING SUMMARY: Michele Lamb, Licensing Administrator (303-441-3436)
Beata Mazurkiewicz, Licensing Specialist (303-441-3091)

NAMES OF MEMBERS, STAFF, AND INVITED GUESTS PRESENT:

Board Members: Steve Wallace, Harriet Barker, Lisa Spalding, David Timken, and Tim McMurray (arrived during item 1).

Staff Present: Sandra Llanes, Assistant City Attorney, Mishawn Cook, Licensing Manager, Michele Lamb, Licensing Administrator, and Beata Mazurkiewicz, Licensing Specialist.

QUASI-JUDICIAL MEETING OUTLINE OF AGENDA

---

1. **Member roll call; Approval of Beverage Licensing Authority (BLA) minutes from May 21, 2014 April 16, 2014, and hearing agenda issues from licensing clerk.**

   Chair Wallace recognized Member Timken as having received an award from the Colorado Chapter of MADD. Roll call was taken. A quorum of four BLA members was initially present, with Member McMurray arriving late to the hearing. Chair Wallace moved, Member Spalding seconded, to approve the May 21, 2014 minutes. Motion approved 4:0.

2. **Matters from the Boulder Police Department (BPD).**

   Officer Carlene Hofmann of BPD was absent. Officer Hofmann provided her enforcement update to the BLA via an email which was entered as agenda item 2, exhibit 1.

3. **Matters from the Responsible Hospitality Group.**

No members from the Responsible Hospitality Group were present. President Mike Absalom provided an update to the BLA via an email which was entered as agenda item 3, exhibit 1.

4. **BLA Rulemaking public hearing concerning penalty schedule review with consideration of administrative violations vs. public health and safety violations, mitigating and aggravating factors discussion, and acceptance of fines in lieu of suspension days.**

Member McMurray arrived at the beginning of this agenda item. The board members discussed the above issues. The board opened the discussion to the public. There was no public comment at this point. Member Spalding confirmed with Attorney Llanes that the requirement that a licensee had not had a suspension stayed by payment of a fine during the two years immediately preceding had been removed from the Colorado Liquor Code. The board said they use or grant fines in lieu sparingly and usually in combination with some suspension day(s). Member McMurray brought up administrative violations.

Members agreed that since they have flexibility there was no reason to change the penalty schedule and they would determine penalties on a case-by-case basis. The board confirmed that membership in the RHG may be considered a mitigating factor. Attorney Llanes brought up mitigating factors before a violation versus after a violation has occurred. This was discussed by the board and they decided it is discretionary and the board would look at it on a case by case basis. The board confirmed that "final" as mentioned in C.R.S. 12-47-601(3)(a) means when the board makes its decision on suspensions. The board reiterated Colorado Liquor Rule 47-600(F) regarding posting of notice of suspension in licensee window. The Board requested that a copy of the minutes for agenda items 3 and 4 be forwarded to the RHG. The discussion was opened back up to public comment.

Tony Milazzo of the newly formed Boulder Chapter of the Colorado Restaurant Association (CRA) addressed the board. He asked whether the board was involved with or aware of the state reviewing the penalty schedule. Mr. Milazzo urged the board members to use their discretion and grant fines in lieu of suspension days. He mentioned lost employee wages and loss of sales tax revenue to the city during a suspension period. Member Spalding invited the CRA to speak to the BLA at one of their hearings after the CRA is introduced at the city council meeting in July.

5. **BLA Rulemaking public hearing about BLA mission, change from 6 months to 3 months in city training condition, terminating the practice of letting licensees select suspension days, non-administrative renewal hearings for transfers to landlords and posting of closed locations, and any other changes requiring council approval.**

Attorney Llanes suggested the members begin by discussing the proposed changes to the BLA Rules of Procedure. The board discussed Section 3-6 Training Requirements and agreed unanimously to change the amount of time a liquor licensee has to train staff from 6 months to 3 months. They also confirmed that online training is unacceptable.

The board discussed Section 6-5 Exhibits. The question was whether exhibits in electronic format are acceptable. The discussion evolved to distributing the board member's packets electronically. The board decided that they may allow electronic distribution of the hearing packet in the future and this would involve future discussions. The board did decide to allow licensees/applicants to submit exhibits in electronic format.

The board next addressed Subsection 10-2-3(E) Show Cause Hearings. They approved adding the words "generally are not" regarding whether suspension dates are subject to change. There was an extensive discussion among the board members regarding who determines or sets the dates for a suspension i.e. the board or the licensee. It was opened to public comment.

Tony Milazzo, Boulder Chapter of CRA, then addressed the board. Mr. Milazzo stated that it could be viewed in an adversarial light if the BLA chose the starting of the suspension dates. Member Barker brought up that with the recent light on the BLA this could be seen as arbitrary and have the unintended result of the board having to listen to more exception requests than anticipated. The board decided to leave it as it has been practiced which is to allow the licensee to recommend dates to be served and the board make the final determination. Attorney Llanes will amend the rules to reflect this.

Ms. Cook informed the board that her office's standard practice is to set a BLA approved transfer to a landlord as new licensee for non-administrative review regardless of whether BLA has directed that or not. Also included for the board's information was a mock-up poster for posting of closed locations which has been approved by the City Attorney's office. Attorney Llanes will include in the rules the requirement for posting of the poster at closed locations.

6. **Public hearing and continued consideration of whether there is good cause for a non-renewal of a March 20, 2014 renewal application from PDQ Development, Inc d/b/a PDQ Gas and Food, 5200 Manhattan Circle, Boulder, CO 80303; Jeffrey Jacobsen, President, Director, and Owner, and Jerry Archer, VP, Secretary, and Director, with a premise business mailing address, for a renewal of a 3.2% Beer Off Premise type liquor license.**

Dan Carr, Esq. appeared on behalf of the applicant. Richard Gunderson, licensee supervisor, was sworn in and confirmed the 10 day posting. Hearing procedures were waived. No Authority members disclosed ex parte communications or conflicts of interest. No third parties requested interested party status and no public comment was given in this matter. Mr. Gunderson requested the authority to renew their license. Mr. Gunderson confirmed

that the licensee does want and intend to start selling 3.2 Beer upon approval of the renewal application by the Authority. Member Spalding moved, Timken seconded, to approve the renewal with the condition that sales of alcohol commence within 60 days of the hearing. Motion passed 5:0.

7. **Public hearing of a March 24, 2014 application from Learfield Levy Foodservice LLC d/b/a Levy Restaurants – East Side, 372 UCB University of Colorado, Boulder, CO 80309; Levy Premium Foodservice LP, 50.01% Owner, with Andrew Lansing, President/CEO, Michael Perlberg, Senior Vice President & General Counsel, Robert Seiffert, CFO/Treasurer, Travis Tucker, Director of Operations and Registered Manager, and Learfield Foodservice & Entertainment LLC, 49.99% Owner, with Marc Jenkins, COO; with a business mailing address of 980 N. Michigan Avenue, Suite 400, Chicago, IL 60611, for a transfer of a Hotel-Restaurant type liquor license.**

   Jon Stonbraker, Esq. appeared on behalf of the applicant. Exhibits were entered. Joseph Smith, Director of Operations for University of Colorado for the Levy organization, and William Kelsey, both representing the applicant, were sworn in and confirmed the 10 day posting. Hearing procedures were waived. No Authority members disclosed ex parte communications or conflicts of interest. No third parties requested interested party status and no public comment was given in this matter. Mr. Smith was questioned by Mr. Stonbraker and provided testimony regarding the applicant and this transfer application. Member Spalding questioned the number of violations detailed in the attachment to the Individual History Records. Member Timken asked a follow up question regarding whether the University of Colorado was aware of the violations. Mr. Stonbraker answered that he did not know whether the university was aware of the violations or not. Mr. Stonbraker stated that his firm had diligently reported to the Board the results of what the applicant had told his firm regarding the violations. Member McMurray moved, Barker seconded, that the transfer of the Hotel-Restaurant type liquor license be approved. Motion passed 5:0.

8. **Public hearing of a March 24, 2014 application from Learfield Levy Foodservice LLC d/b/a Coors Events Conference Center, 401 UCB, Coors Events Conference Center, Boulder, CO 80309; Levy Premium Foodservice LP, 50.01% Owner, with Andrew Lansing, President/CEO, Michael Perlberg, Senior Vice President & General Counsel, Robert Seiffert, CFO/Treasurer, Travis Tucker, Director of Operations, and Learfield Foodservice & Entertainment LLC, 49.99% Owner, with Marc Jenkins, COO, and William Kelsey, Registered Manager; with a business mailing address of 980 N. Michigan Avenue, Suite 400, Chicago, IL 60611, for a transfer of a Hotel-Restaurant type liquor license.**

   Mr. Stonbraker asked that the Board incorporate the previous testimony given on Agenda item 7. Mr. Smith and Mr. Kelsey remained sworn in. Exhibit items were entered. Hearing procedures were waived. No Authority members disclosed ex parte communications or

conflicts of interest. No third parties requested interested party status and no public comment was given in this matter. Member Spalding questioned William Kelsey, Registered Manager, concerning his background results. Member Barker moved, McMurray seconded, the approval of the Transfer of a Hotel-Restaurant type liquor license. Motion passed 5:0.

9. **Public hearing of a March 25, 2014 application from Learfield Levy Foodservice LLC d/b/a Folsom Field – West Stands, 372 UCB University of Colorado, Boulder, CO 80309; Levy Premium Foodservice LP, 50.01% Owner, with Andrew Lansing, President/CEO, Michael Perlberg, Senior Vice President & General Counsel, Robert Seiffert, CFO/Treasurer, Travis Tucker, Director of Operations, and Learfield Foodservice & Entertainment LLC, 49.99% Owner, with Marc Jenkins, COO, and Stefanie Duda, Registered Manager; with a business mailing address of 980 N. Michigan Avenue, Suite 400, Chicago, IL 60611, for a transfer of a Hotel-Restaurant type liquor license.**

   Mr. Stonbraker asked that the Board incorporate the previous testimony given on Agenda item 7. Mr. Smith and Mr. Kelsey remained sworn in. Exhibit items were entered. Hearing procedures were waived. No Authority members disclosed ex parte communications or conflicts of interest. No third parties requested interested party status and no public comment was given in this matter. Member Spalding cautioned Mr. Smith regarding the skyboxes and previous violations. Chair Wallace questioned Mr. Smith regarding this specific location and the alcohol storage. Member McMurray moved, Timken seconded, to approve this Transfer of a Hotel-Restaurant type liquor license. Motion passed 5:0.

10. **Public hearing and consideration of an April 14, 2014 application from CMG Ventures LLC d/b/a West End Wine Shop, 777 Pearl Street, Boulder CO 80302; Mark Geraghty, Co-Owner and Manager, and Chelsea Geraghty, Co-Owner and Manager, with a business mailing address of 1078 Marble Court, Boulder, CO 80303, for a transfer of a Retail Liquor Store type liquor license.**

    Justin Konrad, Esq., entered his appearance on behalf of the applicant. Agenda item 10, exhibit 1 was entered. Mark Geraghty and Chelsea Geraghty were both sworn in and confirmed the 10 day posting. Reading the procedures was waived. Member McMurray disclosed a conflict of interest and recused himself. There were no other ex parte communications or conflicts of interest disclosed by the remaining authority members. No third parties requested interested party status and no public comments were received. Mr. Konrad provided background information regarding the applicant. Mark and Chelsea Geraghty both testified regarding the transfer application. Member Spalding moved, Timken seconded, to approve the Transfer of the Hotel-Restaurant type liquor license. Motion passed 4:0 with McMurray recused.

11. **Public hearing and consideration of an April 21, 2014 application from CCRC, Inc d/b/a Agave Mexico Bistro & Tequila House, 2845 28th Street, Boulder CO 80301; Rene**

Cervantes Jr., President and Registered Manager, with a business mailing address of 11201 Prospect Road, Longmont, CO 80504, for a permanent modification of a Hotel-Restaurant type liquor license.

Member McMurray returned to the hearing. Rene Cervantes Jr., licensee owner, was sworn in and confirmed the 10 day posting period. Procedures were read. No Authority members disclosed ex parte communications or conflicts of interest. No third parties requested interested party status and no public comment was given in this matter. Mr. Cervantes testified regarding this permanent modification. Member Spalding raised a concern concerning the lack of business petitions. Chair Wallace replied that businesses within the neighborhood boundaries would have seen the posting and had notice that they could appear at the hearing. Member Barker moved, McMurray seconded, to approve the permanent modification of a Hotel-Restaurant type liquor license. Motion passed 5:0.

12. Public hearing and consideration of an April 21, 2014 application from Verde No. 1 Limited Partnership L.L.L.P. d/b/a Verde, 3070 28th Street, Unit B, Boulder, CO 80301; Verde Inc. as general partner with Tyson Ingraham-, as President and Registered Manager, John Sethney-, as VP & Treasurer, and Brandon Miller-, as VP, Sec, & General Counsel, with 7 other limited partners with none owning over a 10% interest, and with a business mailing address of 2650 Iris Avenue, Unit B 12, Boulder, CO 80304, for a new Hotel-Restaurant type liquor license.

Brandon Miller, John Sethney, and Tyson Ingraham, applicant co-owners, were present on behalf of applicant, were sworn in, confirmed the 10 day posting, and testified concerning this new Hotel-Restaurant liquor license application. Exhibits were entered. Reading the procedures was waived. No Authority members disclosed ex parte communications or conflicts of interest. Chris Ingraham was sworn in, addressed the authority as an interested party, and he spoke in favor of the granting of the new Hotel-Restaurant type liquor license. Member Spalding noted a few corrections to the petitions. Member Barker moved, Timken seconded, to approve this Hotel-Restaurant type liquor license. Motion passed 5:0.

13. Matters from the Assistant City Attorney: No matters were addressed.

14. Matters from the Licensing Clerk:

A. Neighborhood boundaries for July 16, 2014 hearing:

i) Rincon Argentino, LLC d/b/a Rincon Argentino – Permanent Modification to a Beer & Wine type liquor license at 2525 Arapahoe Avenue, Suite A-05, Boulder, CO 80302. The board discussed the following boundaries: North: Pearl; South:

Colorado; West: 17th Street; East: 33rd Street. Chair Wallace moved, McMurray seconded, to approve these boundaries. Motion passed 5:0.

ii) Frasca Food and Wine Inc d/b/a Frasca Food And Wine/Pizzeria Locale – Permanent Modification to a Hotel-Restaurant type liquor license at 1738 Pearl Street, Unit 104, Boulder, CO 80302. The board discussed the following boundaries: North: Alpine Street; South: University Street; West: 6th Street; East: Folsom. Chair Wallace moved, Barker seconded, to approve these boundaries. Motion passed 5:0.

iii) BaconLuv, LLC d/b/a Blackbelly Market – New Hotel-Restaurant type liquor license at 1606 Conestoga Street #3, Boulder, CO 80301. The board discussed the following boundaries: North: Pearl Parkway extended; South: Baseline Road; West: Foothills Parkway; East: City limits. Chair Wallace, Spalding seconded, moved to approve these boundaries. Motion passed 5:0.

B. Informational items:

i) June Special Events and Temporary Modifications: City licensing mentioned this was in the packet.

ii) June Liquor License renewal mailing list: City licensing mentioned this was in the packet.

iii) Information Emails to BLA from John Balliet, TIPS Trainer.

iv) Licensing Clerk briefing to BLA of closed licensed locations. It was mentioned that: A Spice of Life surrendered their liquor license and that Mishawn Cook received a request for information on transferring the hotel-restaurant for 221 B Baker Street from Tebo.

15. Matters from the Chair and Members of the Authority.

It was noted that the Press Play hearing was continued to a 2nd Special Hearing Thursday, August 14, 2014.

ADJOURNMENT

Member Barker moved, Wallace seconded, to adjourn the meeting. Motion approved 5:0, thus the hearing was adjourned at 6:00 p.m.

TIME AND LOCATION OF FUTURE MEETINGS, COMMITTEES OR SPECIAL HEARINGS:

Standard hearing time: 3rd Wednesday of every Month at 3PM in Council Chambers for 2014.

Attested: Approved:

Mishawn J. Cook, Tax and License Manager Chair of Beverage Licensing Authority

City of Boulder
BOARDS AND COMMISSIONS MEETING SUMMARY FORM

NAME OF BOARD/COMMISSION: Human Relations Commission

DATE OF MEETING: June 16, 2014

NAME/TELEPHONE OF PERSON PREPARING SUMMARY: Robin Pennington 303-441-1912

NAMES OF MEMBERS, STAFF AND INVITED GUESTS PRESENT:
Commissioners–
Amy Zuckerman, Shirly White, Emilia Pollauf, Peter Osnes, José Beteta
Staff –
Karen Rahn, Carmen Atilano, Kim Pearson, Robin Pennington
Commissioners absent - None

WHAT TYPE OF MEETING (CIRCLE ONE) **[REGULAR]** [SPECIAL] [QUASI-JUDICIAL]

AGENDA ITEM 1 - CALL TO ORDER – The June 16, 2014 HRC meeting was called to order at 5:59 p.m. by **A. Zuckerman.**

AGENDA ITEM 2 – AGENDA ADJUSTMENTS – Discussion/Informational Item 6. A. Living Wage Issue was moved up to follow Community Participation.

AGENDA ITEM 3 – APPROVAL OF MINUTES – S. White moved to accept the May 19, 2014 minutes with one revision**. E. Pollauf seconded** the motion. **Motion carries 5-0.**

AGENDA ITEM 4 – COMMUNITY PARTICIPATION (non-agenda action items) – None.

AGENDA ITEM 5 – ACTION ITEMS

A. **Community Impact Fund Report, BMoCA - A. Zuckerman moved** to accept the report. **P. Osnes seconded. Motion carries 5-0.**
B. **Resolution on Support for Transgender and Gender Nonconforming Children and Youth – P. Osnes moved** to table this item following a further update from staff. **S. White seconded. Motion carries 5-0.**

AGENDA ITEM 6 – DISCUSSION/INFORMATIONAL ITEMS

A. **Living Wage Issue -** Rob Merritt, Denver Prevailing Wage Supervisor, answered questions on Denver's Living Wage and Prevailing Wage ordinances. Dr. Ron Grant, Professor of Sociology at CU Boulder spoke on his experience helping to pass the Tucson, Arizona Living Wage Ordinance. A subcommittee was formed to scope out HRC next steps.
B. **Proposal for Smoking Ban on Selected City Properties –** Eric M. Ameigh**,** Senior Project Manager, answered questions on the **Proposal for Smoking Ban on Selected City Properties.** Commissioners provided their input for City Council's consideration.
C. **YOAB Youth Age Discrimination Issue Update –** YOAB provided commissioners with an update of their action plans regarding this issue.
D. **2014 HRC Work Plan**
    1. **Celebration of Immigrant Heritage RFP – C. Atilano** reminded commissioners that the RFPs were due by June 27 and grant decisions would be made during the July HRC meeting.
    2. **July HRC Meeting at Out Boulder – C. Atilano** confirmed that the July HRC meeting would be held at the Out Boulder facility.
    3. **Update on Panhandling Issue – K. Rahn** explained that the panhandling issue will not

be brought to Council until after the Aug. 13, 2014 Study Session on Homelessness.

E. **Bolder Boulder – A. Zuckerman** gave an update on the campaign to address an issue around gender shaming and the slogan "Sea Level is for Sissies" on the Bolder Boulder t-shirt.

F. **Event Reports – E. Pollauf** provided an update on her attendance at the Boulder Jewish Festival June 15, 2014. **J. Beteta** was on the panel that chose the next Boulder Police Chief.

G. **Follow Up Tasks –** Revise the May 2014 minutes as directed, meet with HRC subcommittee on Living Wage Issue, provide an update on support for safe restrooms for all students, bring forth applications from CoIH RFPs, finalize meeting logistics for July HRC meeting at Out Boulder, continue to provide updates on the panhandling issue as the matter proceeds forward.

AGENDA ITEM 7 – IMMEDIATE ACTION ITEMS – None.

AGENDA ITEM 8 – Adjournment – **J. Beteta moved** to adjourn the June 16, 2014 meeting. **E. Pollauf seconded** the motion. **Motion carries 5-0.** The meeting was adjourned at 8:13 p.m.

TIME AND LOCATION OF ANY FUTURE MEETINGS, COMMITTEES OR SPECIAL HEARINGS: The next regular meeting of the HRC will be July 21, 2014 at 6:00 p.m. at the Out Boulder facility, 2132 14th Street, Boulder, CO 80302.

CITY OF BOULDER
LANDMARKS BOARD
May 7, 2014
1777 Broadway, Council Chambers Room
6 p.m.

The following are the action minutes of the May 7, 2014 City of Boulder Landmarks Board meeting. A digital recording and a permanent set of these minutes (maintained for a period of seven years) are retained in Central Records (telephone: 303-441-3043). You may also listen to the recording on-line at: www.boulderplandevelop.net.

BOARD MEMBERS:
Mark Gerwing, Chair
Kirsten Snobeck
Nick Fiore
Kate Remley
Mike Schreiner
*Leonard May **Planning Board representative without a vote*

STAFF MEMBERS:
Hella Pannewig, Senior Assistant City Attorney
James Hewat, Senior Historic Preservation Planner
Marcy Cameron, Historic Preservation Planner
Lesli Ellis, Comprehensive Planning Manager
Angela Smelker, Historic Preservation Intern

1. **CALL TO ORDER**
   The roll having been called, Chair **M. Gerwing** declared a quorum at 6:02 p.m. and the following business was conducted.

2. **APPROVAL OF MINUTES**
   On a motion by **M. Gerwing**, seconded by **K. Snobeck**, the Landmarks Board approved (5-0) the minutes as amended of the April 2, 2014 board meeting.

3. **PUBLIC PARTICIPATION FOR ITEMS NOT ON THE AGENDA**

4. **DISCUSSION OF LANDMARK ALTERATION AND DEMOLITION APPLICATIONS ISSUED AND PENDING**
   - 640 Hawthorn Ave.
   - Statistical Report

5. ACTION ITEMS

A. Public hearing and consideration of an application to designate the building and property at 2104 Bluff St. as a local historic landmark, to be known as the Kelso House, per Section 9-11-5 of the Boulder Revised Code, 1981 (HIS2014-00048). Applicant/Owner: Chad and Kristen Watson.

Staff Presentation

M. Cameron made a presentation with recommending that the Landmarks Board forward the application to City Council with a recommendation to designate the property as a local landmark.

Applicant's Presentation

The applicant was not in attendance.

Public Hearing

Abby Daniels, 1123 Spruce St., Executive Director of Historic Boulder, spoke in support of landmark designation for the Kelso House, noting the organization's history with the property.

Motion

On a motion by **M. Gerwing**, seconded by **K. Snobeck**, the Landmarks Board adopted (5-0) a resolution to initiate landmark designation the property at 2104 Bluff St. as a local historic landmark, to be known as the Kelso House, finding that it meets the standards for individual landmark designation in Sections 9-11-1 and 9-11-2, B.R.C. 1981, and adopts the staff memorandum, including the following as the findings of the board:

The Landmarks Board finds that, based upon the application and evidence presented and subject to the conditions of approval, the proposed designation application will be consistent with the purposes and standards of the Historic Preservation Ordinance, and

1. The proposed designation will protect, enhance, and perpetuate a building reminiscent of past eras and persons important in local and state history and provide a significant example of architecture from the past. Sec. 9-11-1(a), B.R.C. 1981.

2. The proposed designation will maintain an appropriate setting and environment and will enhance property values, stabilize the neighborhood, promote tourist trade and interest, and foster knowledge of the city's living heritage. 9-11-1(a), B.R.C. 1981.

3. The proposed designation draws a reasonable balance between private property rights and the public interest in preserving the city's cultural, historic, and architectural heritage by ensuring that demolition of buildings important to that heritage will be carefully weighed with other alternatives. 9-11-1(b), B.R.C. 1981.

4. The proposed designation is consistent with the criteria specified in Section 9-11-5(c), B.R.C. 1981.

B. Public hearing and consideration of whether to initiate individual landmark designation for the property located at 640 Hawthorn Ave., per Section 9-11-3 of the Boulder Revised Code, 1981 (HIS2014-00033). Owner: Orion and Kristin Creamer.

Board members were asked to reveal any ex-parte contacts they may have had on this item.
L. May recused himself.
M. Schreiner drove by the property.
M. Gerwing and **K. Remley** made site visits on April 16, 2014 and attended the April 24, 2014 meeting with the applicant to discuss alternatives.
K. Snobeck attended the Landmarks design review committee meeting when the application was referred to the board and made a site visit on April 16, 2014.
N. Fiore made a site visit prior to the April 2, 2014 Landmarks Board meeting.

Staff Presentation
M. Cameron made a presentation and noting that staff did not have a recommendation for board action.

Applicant's Presentation
Kristin Creamer, 650 Hawthorn Ave., property owner, requested the board issue a demolition permit for the two buildings.

Public Hearing
Abby Daniels, 1123 Spruce St., Executive Director of Historic Boulder, expressed support of initiating landmark designation for the property to allow for more public feedback.

Motion
The board agreed not to take action on the application and continue the stay of demolition at the current time to provide more time to seek alternatives to the demolition of the buildings at 640 Hawthorn Ave.

C. Public hearing and consideration of a Landmark Alteration Certificate to remove a 1920s addition and construct a 1,530 sq. ft. addition at the rear of the house at 835 Pine St. in the Mapleton Hill Historic District, per section 9-11-18 of the Boulder Revised Code (HIS2014-00058). Applicant: Keith Berger Owner: Jennifer Sullivan.

Board members were asked to reveal any ex-parte contacts they may have had on this item.
M. Gerwing, K. Snobeck, K. Remley and **N. Fiore** made site visits.
K. Snobeck reviewed the project at the Landmarks design review committee meeting.
M. Schreiner and **L. May** had no ex-parte contacts.

Staff Presentation
J. Hewat made a PowerPoint presentation to the board and recommended that the Landmark Alteration Certificate application be approved with conditions.

Applicant's Presentation
Jennifer Sullivan, 835 Pine St., spoke in support of the Landmark Alteration Certificate.
Keith Berger, 2035 Alpine Dr., spoke in support of the Landmark Alteration Certificate.

Public Hearing
Kathryn Barth, 2940 20th St., spoke in opposition of an addition that doubles the square footage of a house and considers the addition to be more complicated. Considers mass and scale and perhaps square footage should be reduced as the current proposal overpowers the original portion of the house.
Abby Daniels, 1123 Spruce St., noted that the Preservation Committee agrees with the staff recommendation.

J. Sullivan clarified that they were aware of the design guidelines when they purchased the house and considered the lot to have low visibility from the street.
K. Berger noted that the main bulk is 75' back from the street and that the lot slopes up and will help to reduce the visibility of the addition.

Motion
On a motion by **M. Gerwing**, seconded by **K. Snobeck**, the Landmarks Board approved (4-1, **K. Remley** objecting) the staff memorandum dated May 7, 2014 as the findings of the board and approves the removal of the c. 1920 addition and the construction of an addition at the rear of the main house as shown on plans dated 03/27/2014, finding that they generally meet the standards for issuance of a Landmark Alteration Certificate in Chapter 9-11-18, B.R.C. 1981, subject to the following conditions:.

1. The applicant shall be responsible for constructing the house in compliance with the approved plans dated 03/27/2014, except as modified by these conditions of approval.

2. Prior to submitting a building permit application and final issuance of the Landmark Alteration Certificate, the applicant shall submit revised designs that reduces the mass and scale of the addition when viewed from Pine St., 9th St. and the alley to ensure that it is subordinate to the historic portion of the house, with emphasis on reducing the portion to the east wall of the main house. This might require reduction of the square footage, roof mass and/or the height of the proposed addition.

3. Prior to submitting a building permit application and final issuance of the Landmark Alteration Certificate, the applicant shall submit the following, which shall be subject to the final review and approval of the Landmarks design review committee: revisions to the design to ensure that the fenestration of the addition that is publicly visible, is simpler than that on the main house by reducing the size of window and door openings and simplifying door and window design (submit window and door details), as well as wall materials, doors, siding material details, paint colors, roofing and any hardscaping on the property to ensure that the approval is consistent with the General Design Guidelines and the Mapleton Hill Historic District Guidelines and the intent of this approval.

K. Remley considers the proposed square footage of the addition to be inappropriate for this property.

D. Public hearing and consideration of a Landmark Alteration Certificate to construct a new two-car, 950 sq. ft. detached garage with an Owners Accessory Unit above at 420 Spruce St. in the Mapleton Hill Historic District, per section 9-11-18 of the Boulder Revised Code (HIS2014-00081). Applicant: Juana Gomez Owner: Luis and Julia Garza.

Board members were asked to reveal any ex-parte contacts they may have had on this item.
M. Gerwing, N. Fiore, K. Snobeck, and **K. Remley** made site visits
M. Gerwing, K. Snobeck and **N. Fiore** previously reviewed the Landmark Alteration Certificate application for the construction of the main house at a full board hearing
M. Schreiner and **L. May** had no ex-parte contacts

Staff Presentation
J. Hewat made a PowerPoint presentation to the board and recommended that the Landmark Alteration Certificate application be approved with conditions.

Applicant's Presentation
Luis Garza, 420 Spruce St, spoke in support of landmark alteration certificate with staff's conditions, noting that he met with his neighbor to the west to address concerns about their view to the west.
Juana Gomez, 1127 Cranbrook Ct., architect, spoke in support of a Landmark Alteration Certificate.

Public Hearing
Peter Lapidis, 2029 5th St., has no objection to the garage and ADU and met with applicant to discuss impact of their views to the west. Considers height to be taller than most accessory buildings in the area, and disproportionally tall and requested a condition to reduce the building 5 feet in height.
Nicole Ward, 2029 5th St., spoke in general support of the staff's recommendation to reduce the building height and requested that the height be reduced 5 feet.
Abby Daniels, 1123 Spruce St., Historic Boulder, stated that the Preservation Committee agreed with staff's recommendation.

Motion
On a motion by **M. Gerwing**, seconded by **K. Snobeck**, the Landmarks Board approved (4-1, **K. Remley** objecting) the staff memorandum dated May 7th, 2014 as the findings of the Board and approve a Landmarks Alteration Certificate for the construction of a garage at 420 Spruce St. as shown on plans dated March 24, 2014, subject to the following conditions:

1. The applicant shall be responsible for ensuring that the development will be constructed in compliance with the application dated March 24, 2014 on file in the City of Boulder Community Planning and Sustainability Department, except as modified by these conditions of approval.

2. Prior building permit application and final issuance of the Landmark Alteration Certificate, the applicant shall submit revised plans for the proposed garage showing a reduction in height of the building of at least 3 to 5 feet so that it reads as a one-and-one half story building consistent with the General Design Guidelines for Boulder's Historic Districts and Individual Landmarks and the Mapleton Hill Design Guidelines.

3. Prior to submitting a building permit application and final issuance of the Landmark Alteration Certificate, the applicant shall submit the following: final details showing door and window details, roofing materials, railings, stairs, decking, siding, paving and proposed colors. These design details shall be reviewed and approved by the Landmarks design review committee, prior to the issuance of a building permit. The applicant shall demonstrate that the design details are in compliance with the intent of this approval and the General Design Guidelines and the Mapleton Hill Historic District Design Guidelines.

K. Remley objected because she considers the height should be reduced by at least five feet.

E. Public hearing and consideration of a Landmark Alteration Certificate to construct a one-and-a-half story, 715 sq. ft., two-car garage, remove a portion of the contributing garage, and construct a fence along the south and east property lines 730 Pine St. in the Mapleton Hill Historic District, per section 9-11-18 of the Boulder Revised Code (HIS2014-00087). Applicant: Will Hentschel Owner: Douglas and Jennifer Campbell.

Board members were asked to reveal any ex-parte contacts they may have had on this item.
M. Gerwing, N. Fiore, K. Snobeck and **K. Remley** made site visits
M. Schreiner and **L. May** had no ex-parte contacts

Staff Presentation
J. Hewat made a PowerPoint presentation to the board and recommended that the Landmark Alteration Certificate application be approved with conditions.

Applicant's Presentation
Jennifer Campbell, 730 Pine St., property owner, stated that she has met with **J. Hewat** and Brian Holmes, zoning administrator, to discuss zoning regulations and spoke in support of the Landmark Alteration Certificate application.

Public Hearing
Abby Daniels, 1123 Spruce St., Historic Boulder, stated that the Preservation Committee agreed with staff's recommendation to approve a Landmark Alteration Certificate with conditions.
Kathryn Barth, 2949 20th St., supports retention of the contributing garage but is concerned with two-car garage along alley and considers that plate height on second story should be reduced. General concern about the general character of the alleys and having continuous walled in feeling.

J. Campbell stated that it is extremely difficult to meet owners' needs within the constraints of the guidelines and by keeping the existing garage, she requests that the board provide leeway in terms of the new accessory building.

Motion

A motion to approve the project made by **K. Snobeck**, seconded by **N. Fiore** failed **2-3, M. Gerwing, K, Remley and M. Schreiner opposed.** Subsequently, **J. Campbell** withdrew the request and to redesign but asked for clear direction from the board as to what would be an acceptable building. **M. Gerwing** stated that the mass and scale needs to be reduced to either a one-story, two car garage or a one-car, two-story garage. **M. Schreiner** indicated this would meet his concerns. **K. Remley** stated that a two-story accessory building was not appropriate in this location.

F. Public hearing and consideration of a Landmark Alteration Certificate to construct a free-standing 355 sq. ft. building to provide American with Disabilities Act-compliant restrooms immediately west of the Chautauqua Auditorium at 900 Baseline Rd., in Chautauqua Park, per section 9-11-18 of the Boulder Revised Code (HIS2014-00089). Applicant: Jeff Medanich Owner: Colorado Chautauqua Association.

Board members were asked to reveal any ex-parte contacts they may have had on this item.
M. Gerwing and **K. Snobeck** attended a site meeting with the Landmarks Board in June 2013
K. Remley made a site visit
N. Fiore, M. Schreiner and **L. May** did not have ex-parte contacts.

Staff Presentation

J. Hewat made a PowerPoint presentation to the board and recommended that the Landmark Alteration Certificate application be approved with conditions.

Applicant's Presentation

Jeff Medanich, 2304 County Road West, Berthoud, Colorado Chautauqua Association, spoke about the collaborative effort of this proposal, including various city departments and the State Historic Fund. Six different locations were considered and this site was chosen as the best. He looks forward to working with the city on future projects at Chautauqua.

Public Hearing

Kathryn Barth, 2529 20th St., spoke about her attendance at one of the site visits and supports the proposed location and design.
Abby Daniels, 1123 Spruce St., Historic Boulder, stated that the Preservation Committee agreed with staff's recommendation to approve a Landmark Alteration Certificate.
Catherine Long-Gates, 3240 Broadway, president of Historic Boulder and co-owner of a Chautauqua cottage, supports the Landmark Alteration Certificate application and appreciated the collaborative and inclusive design process.
Bill Patterson, 7174 Paintbrush Trail, Chair of Colorado Chautauqua Association Board, spoke of design process and supports the application.

Motion

On a motion by **M. Gerwing**, seconded by **K. Remley**, the Landmarks Board approved (5-0) the application for the construction of new restroom building at the west side of the Chautauqua Auditorium, 900 Baseline Road as shown on plans dated 02/24/2014, finding that if constructed pursuant to the conditions below, it meets the standards for issuance of a Landmark Alteration Certificate in Section 9-11-18, B.R.C. 1981, and is consistent with the General Design Guidelines and the Chautauqua Park Historic District Design Guidelines, and adopts the staff memorandum dated May 7, 2014 as the findings of the Board.

1. The applicant shall be responsible for ensuring that the development will be constructed in compliance with the application dated 02/24/2014 on file in the City of Boulder Community Planning and Sustainability Department, except as modified by these conditions of approval.

2. Prior to submitting a building permit application and receiving final issuance of the Landmark Alteration Certificate, the applicant shall submit the following: final details showing door and window details, roofing materials, railings, stairs, decking, siding, paving and proposed colors. These design details shall be reviewed and approved by the Landmarks design review committee, prior to the issuance of a building permit. The applicant shall demonstrate that the design details are in compliance with the intent of this approval and the General Design Guidelines and the Chautauqua Park Historic District Design Guidelines.

6. MATTERS FROM THE LANDMARKS BOARD, PLANNING DEPARTMENT AND CITY ATTORNEY

A. Officer Elections
   a. **K. Snobeck** nominated **M. Gerwing** for chair. (5-0)
   b. **M. Gerwing** nominated **K. Remley** for vice chair. (5-0)

B. Update Memo

C. Subcommittee Update
   1) Demolition Ordinance
   2) Outreach
   3) Potential Historic Districts and Landmarks
   4) Design Guidelines

7. DEBRIEF MEETING/CALENDAR CHECK

8. ADJOURNMENT

The meeting adjourned at11:06 p.m.

Approved on June 4, 2014

Respectfully submitted,

Chairperson

CITY OF BOULDER
LANDMARKS BOARD
June 4, 2014
1777 Broadway, Council Chambers Room
6 p.m.

The following are the action minutes of the June 4, 2014 City of Boulder Landmarks Board meeting. A digital recording and a permanent set of these minutes (maintained for a period of seven years) are retained in Central Records (telephone: 303-441-3043). You may also listen to the recording on-line at: www.boulderplandevelop.net.

BOARD MEMBERS:
Mark Gerwing, Chair
Kirsten Snobeck
Nick Fiore
Mike Schreiner
*Crystal Gray *Planning Board representative without a vote*

STAFF MEMBERS:
Debra Kalish, Senior Assistant City Attorney
James Hewat, Senior Historic Preservation Planner
Marcy Cameron, Historic Preservation Planner
Lesli Ellis, Comprehensive Planning Manager
Angela Smelker, Historic Preservation Intern

1. **CALL TO ORDER**
   The roll having been called, Chair **M. Gerwing** declared a quorum at 6:00 p.m. and the following business was conducted.

2. **APPROVAL OF MINUTES**
   On a motion by **M. Gerwing**, seconded by **M. Schreiner**, the Landmarks Board approved (4-0) the minutes of the May 7, 2014 board meeting.

3. **PUBLIC PARTICIPATION FOR ITEMS NOT ON THE AGENDA**

4. **DISCUSSION OF LANDMARK ALTERATION AND DEMOLITION APPLICATIONS ISSUED AND PENDING**
   - Statistical Report
   - 640 Hawthorn Ave. - The board agreed to have a public hearing to consider lifting the stay-of-demolition for this property at the next Landmarks Board meeting scheduled for July 2, 2014.

5. ACTION ITEMS

A. Public hearing and consideration of a demolition permit for the buildings located at 747 12th St., non-landmarked buildings over 50 years old, pursuant to per Section 9-11-23 of the Boulder Revised Code 1981 (HIS2014-00070). Applicant: Field West Construction. Owner: 747 Twelfth Street LLC.

Board members were asked to reveal any ex-parte contacts they may have had on this item.
N. Fiore, recused himself from consideration of this case.
M. Gerwing, K. Snobeck, M. Schreiner made site visits to the property.

Staff Presentation
M. Cameron made a PowerPoint presentation to the Board and recommended to impose a stay of-demolition.

Applicant's Presentation
No presentation from applicant.

Public Hearing
Jim Scarboro, 735 12th Street, Boulder, CO a neighbor directly south of the subject property, neighbor, spoke in support of preserving the property.

Abby Daniels, 1123 Spruce St., Executive Director, Historic Boulder, spoke in support of imposing a stay-of-demolition and to look at alternatives to the demolition of the house and garage.

Joe Stepanek, a University Hill resident, spoke in support of preserving the property and noted that David Hull-Holmes was responsible for designing the addition.

Martha Campbell, 750 12th St., Boulder, CO has lived across the street for 60 years and spoke in support of preserving the property.

Kristin Lopez, daughter of the Johnsons and representative of the estate, spoke in support of the application to demolish the house.

Ann Scarboro, 735 12th Street, Boulder, CO spoke in support of preserving the property and the value of the buildings and the mature landscaping on the property.

Geneva Reichert, 740 12th Street, Boulder, CO spoke in support of preserving the property and against the proliferation of "McMansions" on the Hill.

Eric Johnson, 1300 Sumac Street, Boulder, CO a representative of the estate, spoke in support of the application to demolish the house and garage.

Caroline Holmes-Stepanek, a University Hill resident, spoke in support of preserving the property.

Motion
On a motion by **K. Snobeck**, seconded by **M. Schreiner**, the Landmarks Board issued (3-0) a stay-of-demolition for the buildings located at 747 12th St. for a period not to exceed 180 days from the day the permit application was accepted by the city manager, in order to further explore alternatives to demolishing the buildings and adopt the staff memorandum, with the findings of the Board.

B. Public hearing and consideration of a demolition permit for the building located at 445 College Ave., a non-landmarked building over 50 years old, pursuant to per Section 9-11-23 of the Boulder Revised Code 1981 (HIS2014-00085). Applicant: Stephen Sparn. Owner: George Stark.

Board members were asked to reveal any ex-parte contacts they may have had on this item.
K. Snobeck, recused herself from consideration of this case.
M. Gerwing, N. Fiore, M. Schreiner all made site visits to the property.

Staff Presentation
M. Cameron made a PowerPoint presentation to the Board and recommended to impose a stay of-demolition.

Applicant's Presentation
Stephen Sparn, architect, 1731 15th Street, Boulder CO, spoke in support of the application to demolish the house.

George Stark, owner, 1321 Marshall Street, Boulder, CO spoke in support of the application to demolish the house.

Stephanie Stark, owner, 1321 Marshall Street, Boulder, CO spoke in support of the application to demolish the house.

Public Hearing
Abby Daniels, 1123 Spruce St., Boulder, CO, Executive Director, Historic Boulder, representing Historic Boulder's Historic Preservation Committee, spoke in support of imposing a stay-of-demolition to explore alternatives to the demolition of the house.

Kathryn Barth, 2940 20th Street, Boulder, CO spoke in support of imposing a stay-of-demolition and to possibly look at sub-dividing the lot in question.

Motion
On a motion by **M. Gerwing**, seconded by **N. Fiore**, the Landmarks Board issued (3-0) a-stay-of demolition for the building located at 445 College Ave. for a period not to exceed 180 days from the day the permit application was accepted by the city manager, in order to further explore alternatives to demolishing the buildings and adopt the staff memorandum, with the findings of the Board.

C. Public hearing and consideration of amending Section 2. *Site Design*, of the *General Design Guidelines for Boulder's Historic Districts and Individual Landmarks* to include pool guidelines.

The board agreed to discuss this item at a future Landmarks Board meeting, either August or September 2014.

6. MATTERS FROM THE LANDMARKS BOARD, PLANNING DEPARTMENT AND CITY ATTORNEY

A. Comprehensive Housing Strategy Update – Jay Sugnet, Housing Planner Manager discussed the Comprehensive Housing Strategy initiative, City Council's decisions from the 5.27.14 meeting, the goals developed , and process to move forward.

B. Update Memo

C. Subcommittee Update

1) Demolition Ordinance
2) Outreach
3) Potential Historic Districts and Landmarks
4) Design Guidelines
5) Sustainability

7. DEBRIEF MEETING/CALENDAR CHECK

8. ADJOURNMENT

The meeting adjourned at 8:17 p.m.

Approved on July 2, 2014

Respectfully submitted,

Chairperson

CITY OF BOULDER
Boards and Commissions Minutes

NAME OF COMMISSION: Open Space Board of Trustees
DATE OF MEETING: June 11, 2014
NAME/EXTENSION OF PERSON PREPARING SUMMARY: Leah Case x2025
NAMES OF MEMBERS, STAFF AND INVITED GUESTS PRESENT: MEMBERS: Tom Isaacson, Shelley Dunbar, Frances Hartogh, Molly Davis, Kevin Bracy Knight STAFF: Mike Patton, Dave Kuntz, Steve Armstead, Mark Gershman, Steve Mertz, Heather Swanson, Annie McFarland, Brad Skowronski, Mike Orosel, Andy Pelster, Leah Case, Michele Gonzales, Alyssa Frideres GUESTS: Jesse Lewis, Colorado State University Eric Ameigh, Senior Project Manager
TYPE OF MEETING: **REGULAR** CONTINUATION SPECIAL

SUMMATION:

AGENDA ITEM 1- **Approval of the Minutes**
Shelley Dunbar moved to approve the minutes from May 14, 2014 as amended. Frances Hartogh seconded. This motion passed unanimously.

AGENDA ITEM 2- **Public Participation**
Mike Barrow, Boulder Mountainbike Alliance (BMA), asked about cattle grades and when these will be put in. He would have liked Lynn Riedel's presentation, from the last meeting, as an agenda item to allow for public comment.

AGENDA ITEM 3- **Director's Updates**
The effects of recreation and urbanization on wildlife populations
Jesse Lewis, Colorado State University, gave a presentation to the Board. Jesse has collected information from a large fleet of motion activated cameras, and radio collared bobcats. He discussed his recent work funded by Open Space and Mountain Parks (OSMP) and Boulder County which uses his data to address questions related to recreation and wildlife on OSMP and other Boulder County Open Space.

Voice and Sight Tag Monitoring Project
Mark Gershman, Environmental Planning Supervisor, gave an update on Voice and Sight Tag Program

monitoring.

AGENDA ITEM 4- **Matters from the Board**
Kevin Bracy Knight asked about the trails in the north of the system and when these will be fixed. Staff will bring back a work plan and priority list to the Board.

AGENDA ITEM 5 **– Summary of 50th year of OSMP Junior Ranger Program and Declaration to Honor Five Decades of Youth Service***
Steve Mertz, Public Relations Coordinator, gave a presentation celebrating the Junior Ranger Program and its 50th year of continuous service. The City of Boulder OSMP Department joins the community in recognizing the thousands of young people for their efforts in preserving our public lands.

Tom Isaacson read the following proclamation:
The Open Space Board of Trustees joins the staff of the City of Boulder Open Space and Mountain Parks Department in recognizing all of our Junior Rangers over the past 50 years. We salute the more than 5,000 Boulder youth who contributed their talents and efforts in helping the City of Boulder carry out its land management missions. These irreplaceable individuals are an inspiration as they help to protect the resources that make Boulder's Open Space and Mountain Parks so special.

AGENDA ITEM 6 **– Review of and Recommendation Regarding the 2015 Open Space and Mountain Parks Department Capital Improvement Program Budget and a portion of the Lottery Fund Capital Improvement Program Budget***
Mike Orosel, Financial Services Manager, gave a presentation on the 2015 CIP budget.

This item spurred one motion:
Shelley Dunbar moved the Open Space Board of Trustees approve, and recommend that Planning Board approve an appropriation of $7,608,000 in 2015 from the Open Space Fund CIP as outlined in this memorandum and related attachments; and recommend that $355,300 be appropriated from the city's Lottery Fund CIP in 2015 as outlined in this memorandum and related attachments. Frances Hartogh seconded. This motion passed unanimously.

AGENDA ITEM 7 **– Consideration of a smoking ban on all OSMP properties, including trails, without exception.***
Andy Pelster, Land and Facilities Operations Supervisor, gave a presentation on a potential smoking ban for OSMP properties.

The Board did not make a formal motion for this agenda item.

AGENDA ITEM 8 **– Review of proposed trail reroutes in Skunk Canyon valley***
Annie McFarland, Visitor Master Plan Implementation Coordinator, gave a presentation on Skunk Canyon and the plan developed by the Community Collaborative Group (CCG). OSMP staff used the guidance of that plan to determine which trails would be closed and restored, which would be designated and which would be rerouted.

The Board did not make a formal motion for this agenda item. Staff will bring back to the Board another option for the reroute.

ADJOURNMENT: The meeting adjourned at 9:25 p.m.

ATTACH BRIEF DETAILS OF ANY PUBLIC COMMENTS:

TIME AND LOCATION OF ANY FUTURE MEETINGS, COMMITTEES OR SPECIAL HEARINGS:
The next OSBT meeting will be at 1777 Broadway in the Council Chambers July 9, 2014 at 6:00 p.m.

CITY OF BOULDER
Boards and Commissions Minutes

NAME OF COMMISSION: Open Space Board of Trustees
DATE OF MEETING: July 9, 2014
NAME/EXTENSION OF PERSON PREPARING SUMMARY: Leah Case x2025
NAMES OF MEMBERS, STAFF AND INVITED GUESTS PRESENT: MEMBERS: Tom Isaacson, Shelley Dunbar, Frances Hartogh, Molly Davis, Kevin Bracy Knight STAFF: Mike Patton, Jim Reeder, Dave Kuntz, Mark Gershman, Brad Skowronski, Andy Pelster, Kacey French, Leah Case, Lauren Kolb, Alyssa Frideres, Todd Doherty, Annie McFarland
TYPE OF MEETING: **REGULAR** CONTINUATION SPECIAL

SUMMATION:

AGENDA ITEM 1- **Approval of the Minutes**
Shelley Dunbar moved to approve the minutes from June 11, 2014 as amended. Frances Hartogh seconded. This motion passed unanimously.

AGENDA ITEM 2- **Public Participation**
Several members from the public asked staff for feedback on the plan for Anemone Hill as well as some of the paved paths in Boulder.

AGENDA ITEM 3- **Director's Updates**
Trail Maintenance Schedule
Jim Reeder, Land and Facilities Services Division Manager, gave an overview of the trail maintenance schedule.

Sanitas Valley Trail Reconstruction Project
Jim Reeder, Land and Facilities Services Division Manager, gave an update on the Sanitas Valley Trail.

Skunk Canyon Trail Connection
Jim Reeder, Land and Facilities Services Division Manager, gave an update on the Skunk Canyon Trail.

Royal Arch Trail Reconstruction
Jim Reeder, Land and Facilities Services Division Manager, gave an update on the Royal Arch Trail.

AGENDA ITEM 4- **Matters from the Board**
The Board asked for more information on cattle guards and a timeline for installation.

AGENDA ITEM 5 **– Consideration of a recommendation to grant a nonexclusive revocable license to Colorado Department of Transportation for the purposes related to the Highway 36 Project, including the design, construction, maintenance, repair and replacement of the Shearer Ditch crossing at U.S. 36 which traverses the Van Vleet South and Van Vleet East Open Space and Mountain Parks parcels***
Todd Doherty, Water Resources Administrator, gave a presentation to the Board.

This item spurred one motion:
Shelley Dunbar moved the Open Space Board of Trustees pass a motion recommending the OSMP director grant a nonexclusive permit to CDOT for the purposes related to the Highway 36 Project, including the design, construction, maintenance, repair and replacement of the Shearer Ditch crossing at U.S. 36 which traverses the Van Vleet South and Van Vleet East OSMP parcels. Molly Davis seconded. This motion passes unanimously.

ADJOURNMENT: The meeting adjourned at 7:42 p.m.

ATTACH BRIEF DETAILS OF ANY PUBLIC COMMENTS:

TIME AND LOCATION OF ANY FUTURE MEETINGS, COMMITTEES OR SPECIAL HEARINGS:
The next OSBT meeting will be August 20, 2014 at 6:00 p.m.

First Congregational Church of Boulder Day
July 17, 2014

WHEREAS, First Congregational Church of Boulder, United Church of Christ, established July 17, 1864, is the longest serving Congregational church in Colorado; and

WHEREAS, First Congregational Church has played an integral role in nurturing the development of Boulder's spiritual, economic, educational and social progress; and

WHEREAS, First Congregational Church has been a beacon of progressive theology since its founding, creating a sanctuary where the great issues of life and religion are vigorously debated within a context of patience, tolerance and charity; and

WHEREAS, First Congregational Church has for 150 years sustained a soul-searching focus on local, national, and international missions projects; and

WHEREAS, in 1987, First Congregational Church, United Church of Christ, became the first Colorado church in the denomination to adopt the Open and Affirming covenant, proudly and publicly meeting the spiritual needs of the gay, lesbian, bisexual and transgendered communities; and

WHEREAS, First Congregational Church continues its firm support of education, beginning with the appointment of Rev. Thompson to the University of Colorado's original board of trustees, and continues with our church school's commitment to teaching students of all ages.

NOW, THEREFORE, BE IT DECLARED by City Council of the City of Boulder, Colorado, that July 17, 2014 is

FIRST CONGREGATIONAL CHURCH OF BOULDER DAY

Matthew Appelbaum

Matthew Appelbaum, Mayor

This Page Intentionally Left Blank