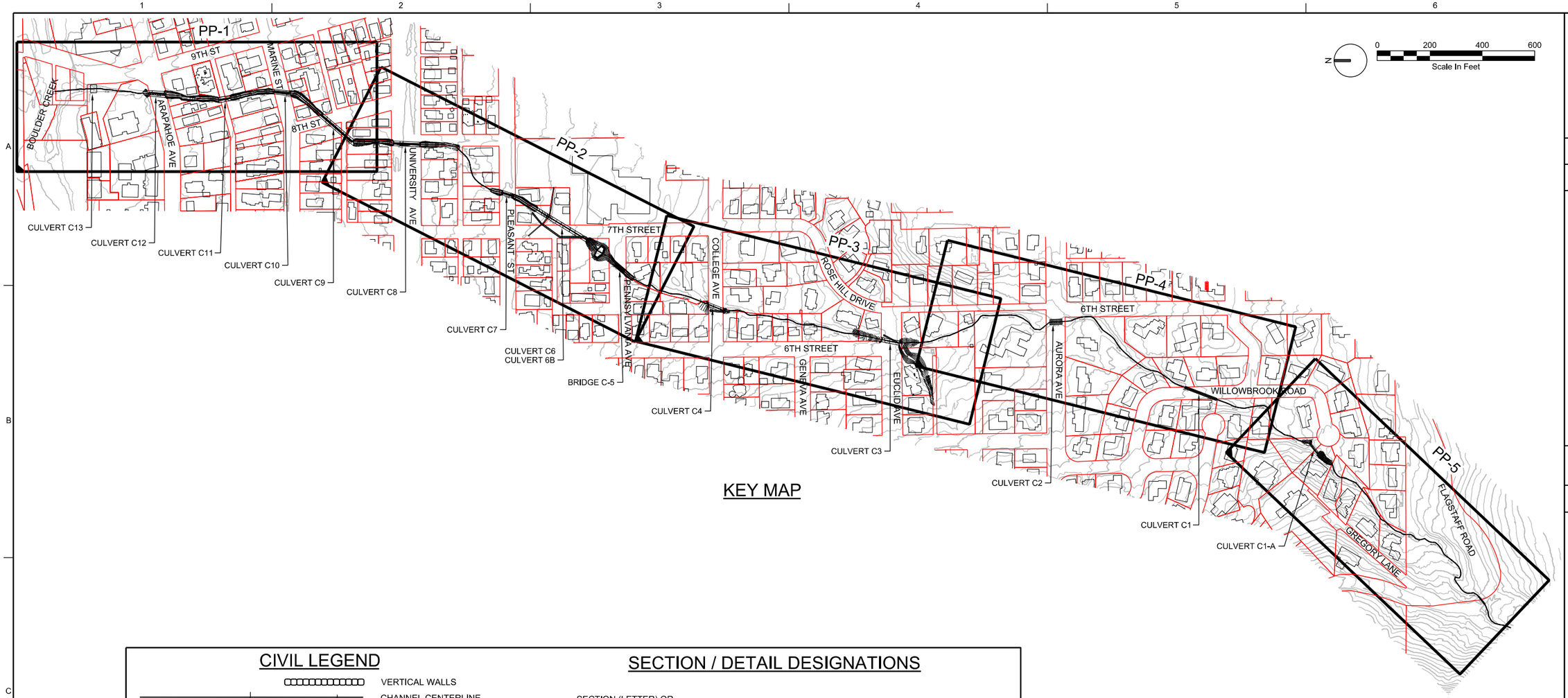

KEY MAP

CIVIL LEGEND

- VERTICAL WALLS
- CHANNEL CENTERLINE (10+00)
- CONTOUR LINE (5155)
- DRAINAGEWAY OR DITCH
- EASEMENTS
- EXST CULVERT
- EXST SANITARY SEWER (SS)
- EXST STORMDRAIN (SD)
- EXST WATER LINE (W)
- FLOODPLAIN 100-YR
- HIGH HAZARD
- PROPERTY LINE
- POTENTIAL 10' ACCESS

SECTION / DETAIL DESIGNATIONS

SECTION (LETTER) OR DETAIL (NUMERAL) DESIGNATION — A

DRAWING NUMBER (REPLACED WITH A LINE IF TAKEN AND SHOWN ON SAME SHEET)

B SECTION
SCALE
100-S-3001

ON DRAWING WHERE SECTION IS SHOWN:
DRAWING NUMBER(S) WHERE TAKEN

B / C-1 — SECTION CALLOUT WHERE SECTION IS ON ANOTHER SHEET AND CUT EXTENDS THROUGHOUT ENTIRE SHEET

SHEET LIMITS KEY

DRAWING NUMBER: PP-X

LOWER LEFT CORNER DWG

PRELIMINARY NOT FOR CONSTRUCTION

NO.	DATE	REVISION	BY	APVD

DSGN	M GARDNER	DR	B SCHAEROTH
CHK	M LYNCH	APVD	M LYNCH

©CH2M HILL 2013, ALL RIGHTS RESERVED.

REUSE OF DOCUMENTS: THIS DOCUMENT, AND THE IDEAS AND DESIGNS INCORPORATED HEREIN, AS AN INSTRUMENT OF PROFESSIONAL SERVICE, IS THE PROPERTY OF CH2M HILL AND IS NOT TO BE USED, IN WHOLE OR IN PART, FOR ANY OTHER PROJECT WITHOUT THE WRITTEN AUTHORIZATION OF CH2M HILL.

9193 SOUTH JAMACIA ST
ENGLEWOOD, CO 80112

CH2MHILL®

GREGORY CANYON CREEK MASTER PLAN

KEY MAP AND LEGEND

SCHEMATIC DESIGN

VERIFY SCALE
BAR IS ONE INCH ON ORIGINAL DRAWING.
0 1"

DATE	JULY 2015
PROJ	498924
DWG	G-1
SHEET	of

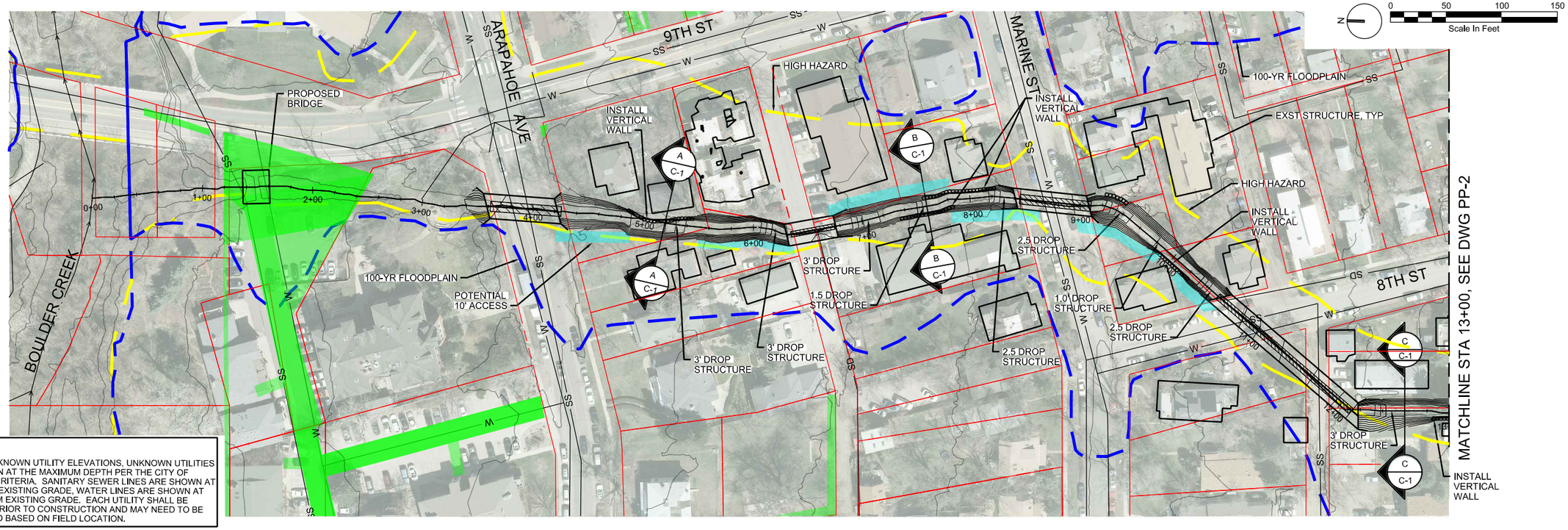

NOTES:

1. BASED ON KNOWN UTILITY ELEVATIONS, UNKNOWN UTILITIES ARE SHOWN AT THE MAXIMUM DEPTH PER THE CITY OF BOULDER CRITERIA. SANITARY SEWER LINES ARE SHOWN AT 3 FT FROM EXISTING GRADE, WATER LINES ARE SHOWN AT 4.5 FT FROM EXISTING GRADE. EACH UTILITY SHALL BE LOCATED PRIOR TO CONSTRUCTION AND MAY NEED TO BE RELOCATED BASED ON FIELD LOCATION.

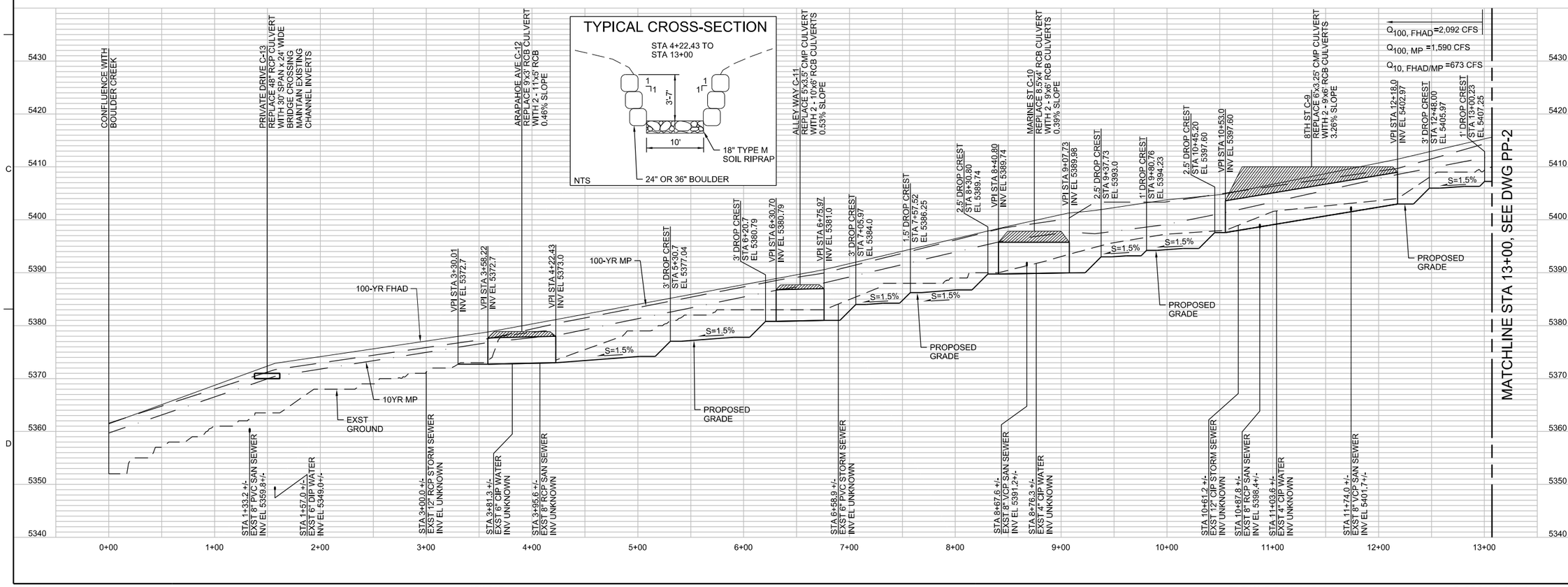

PRELIMINARY NOT FOR CONSTRUCTION

NO.	DATE	REVISION	BY	APVD

DSGN M GARDNER | DR B SCHAFROTH | CHK M LYNCH | APVD M LYNCH

9193 SOUTH JAMACIA ST
ENGLEWOOD, CO 80112

CH2MHILL®

GREGORY CANYON CREEK MASTER PLAN

PLAN AND PROFILE STA 0+00 TO STA 13+00

SCHEMATIC DESIGN

VERIFY SCALE
BAR IS ONE INCH ON ORIGINAL DRAWING.
0 1"

DATE	JULY 2015
PROJ	498924
DWG	PP-1
SHEET	of

REUSE OF DOCUMENTS: THIS DOCUMENT, AND THE IDEAS AND DESIGNS INCORPORATED HEREIN, AS AN INSTRUMENT OF PROFESSIONAL SERVICE, IS THE PROPERTY OF CH2M HILL AND IS NOT TO BE USED, IN WHOLE OR IN PART, FOR ANY OTHER PROJECT WITHOUT THE WRITTEN AUTHORIZATION OF CH2M HILL.

©CH2M HILL 2015. ALL RIGHTS RESERVED.

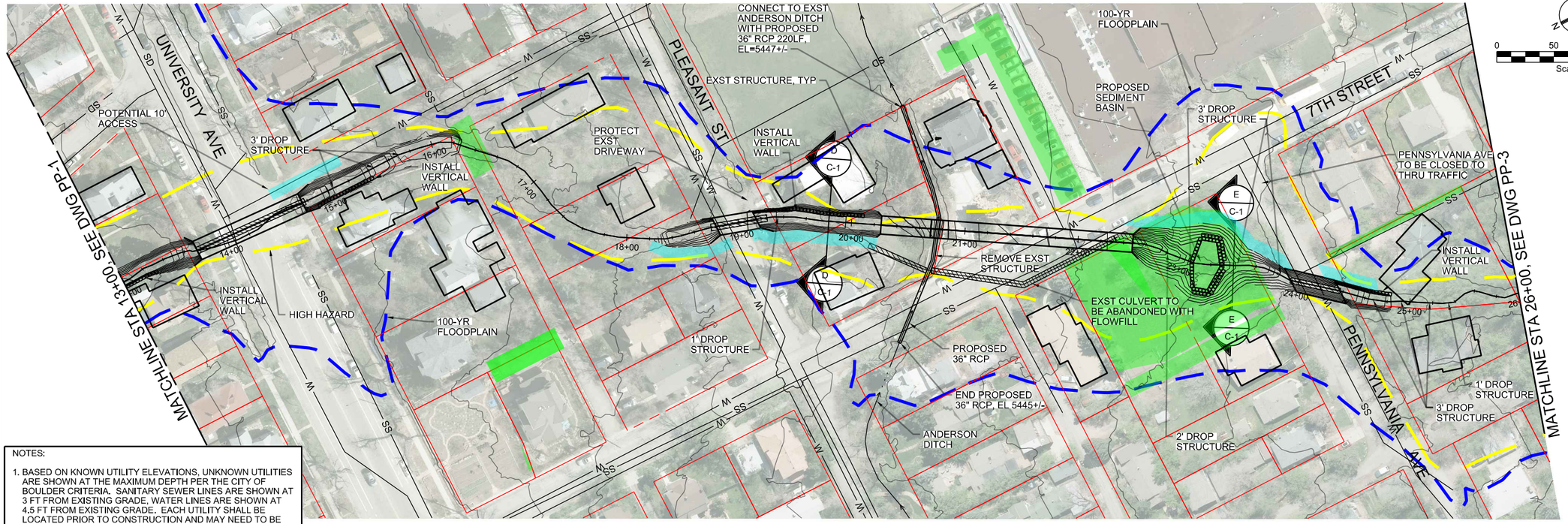

NOTES:

1. BASED ON KNOWN UTILITY ELEVATIONS, UNKNOWN UTILITIES ARE SHOWN AT THE MAXIMUM DEPTH PER THE CITY OF BOULDER CRITERIA. SANITARY SEWER LINES ARE SHOWN AT 3 FT FROM EXISTING GRADE, WATER LINES ARE SHOWN AT 4.5 FT FROM EXISTING GRADE. EACH UTILITY SHALL BE LOCATED PRIOR TO CONSTRUCTION AND MAY NEED TO BE RELOCATED BASED ON FIELD LOCATION.

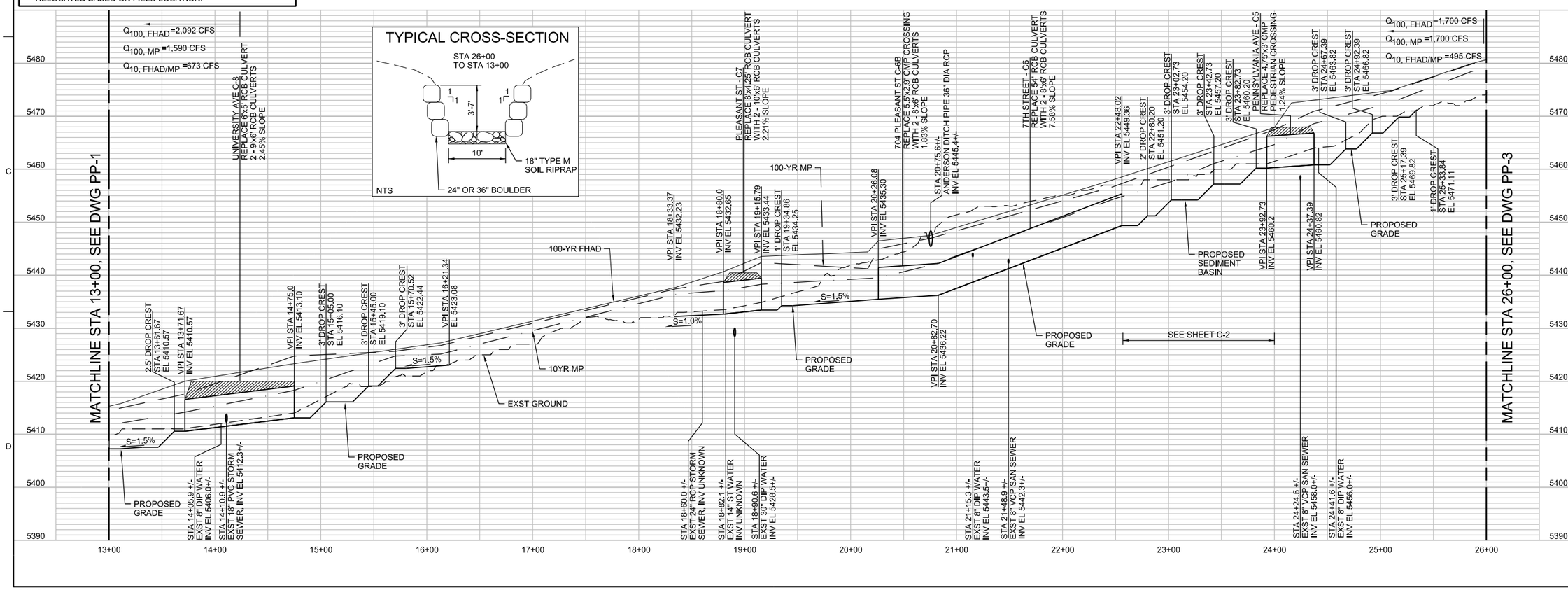

PRELIMINARY NOT FOR CONSTRUCTION

NO.	DATE	REVISION	BY	APVD

DSGN M GARDNER | DR B SCHAFROTH | CHK M LYNCH | APVD M LYNCH

©CH2M HILL 2015. ALL RIGHTS RESERVED.

REUSE OF DOCUMENTS: THIS DOCUMENT, AND THE IDEAS AND DESIGNS INCORPORATED HEREIN, AS AN INSTRUMENT OF PROFESSIONAL SERVICE, IS THE PROPERTY OF CH2M HILL AND IS NOT TO BE USED, IN WHOLE OR IN PART, FOR ANY OTHER PROJECT WITHOUT THE WRITTEN AUTHORIZATION OF CH2M HILL.

9193 SOUTH JAMACIA ST
ENGLEWOOD, CO 80112

CH2MHILL®

GREGORY CANYON CREEK MASTER PLAN

PLAN AND PROFILE
STA 13+00 TO STA 26+00

VERIFY SCALE
BAR IS ONE INCH ON ORIGINAL DRAWING.
0 1"

DATE	JULY 2015
PROJ	498924
DWG	PP-2
SHEET	of

SCHEMATIC DESIGN

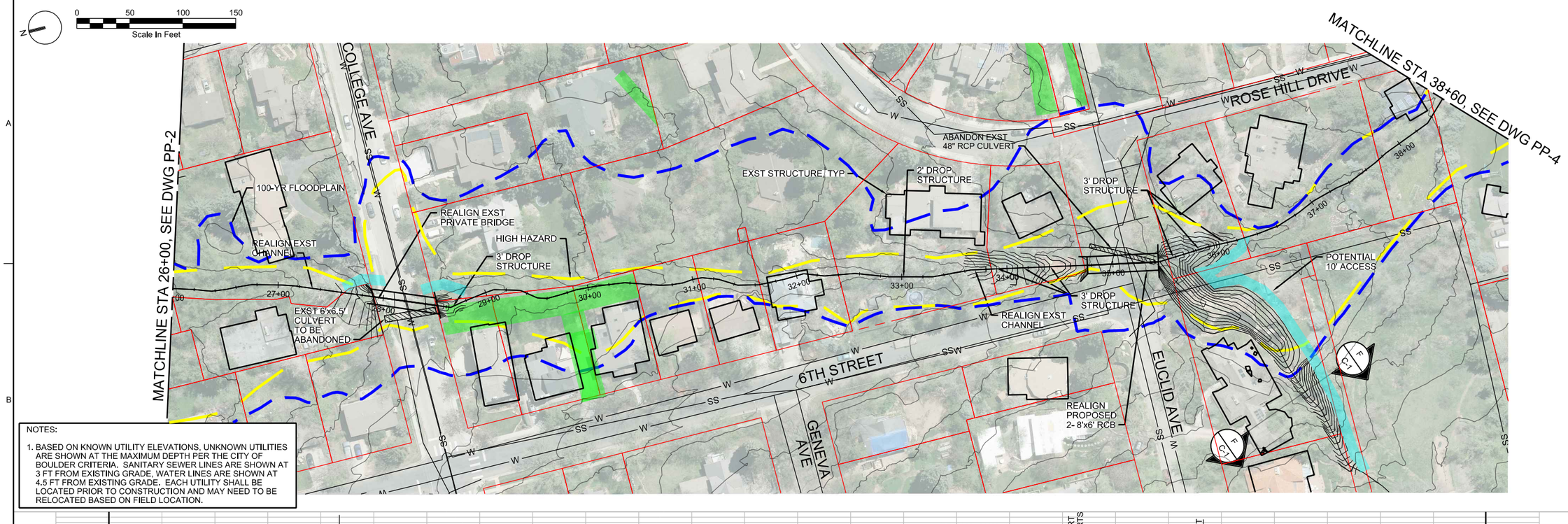

NOTES:

1. BASED ON KNOWN UTILITY ELEVATIONS, UNKNOWN UTILITIES ARE SHOWN AT THE MAXIMUM DEPTH PER THE CITY OF BOULDER CRITERIA. SANITARY SEWER LINES ARE SHOWN AT 3 FT FROM EXISTING GRADE. WATER LINES ARE SHOWN AT 4.5 FT FROM EXISTING GRADE. EACH UTILITY SHALL BE LOCATED PRIOR TO CONSTRUCTION AND MAY NEED TO BE RELOCATED BASED ON FIELD LOCATION.

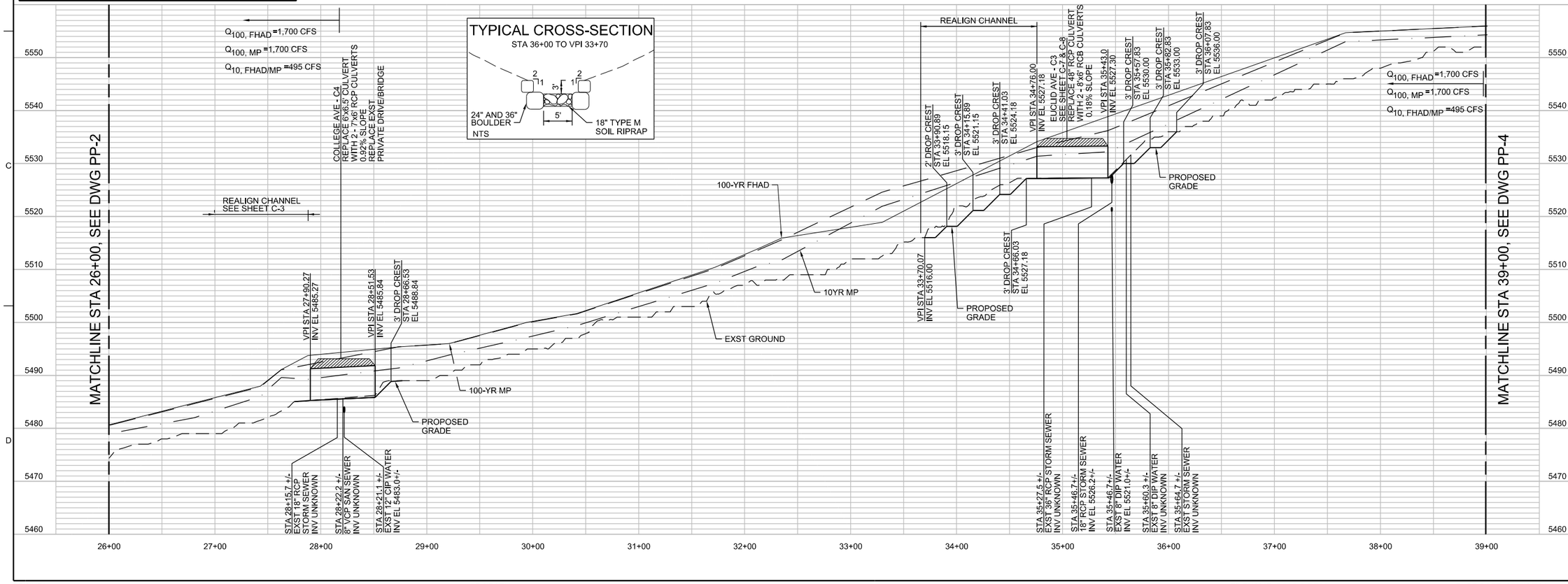

PRELIMINARY NOT FOR CONSTRUCTION

NO.	DATE	REVISION	BY	APVD

DSGN M GARDNER | DR B SCHAFROTH | CHK M LYNCH | APVD M LYNCH

©CH2M HILL 2015. ALL RIGHTS RESERVED.

REUSE OF DOCUMENTS: THIS DOCUMENT, AND THE IDEAS AND DESIGNS INCORPORATED HEREIN, AS AN INSTRUMENT OF PROFESSIONAL SERVICE, IS THE PROPERTY OF CH2M HILL AND IS NOT TO BE USED, IN WHOLE OR IN PART, FOR ANY OTHER PROJECT WITHOUT THE WRITTEN AUTHORIZATION OF CH2M HILL.

9193 SOUTH JAMACIA ST
ENGLEWOOD, CO 80112

CH2MHILL®

GREGORY CANYON CREEK MASTER PLAN

PLAN AND PROFILE STA 26+00 TO STA 38+60

VERIFY SCALE
BAR IS ONE INCH ON ORIGINAL DRAWING.
0 1"

DATE	JULY 2015
PROJ	498924
DWG	PP-3
SHEET	of

SCHEMATIC DESIGN

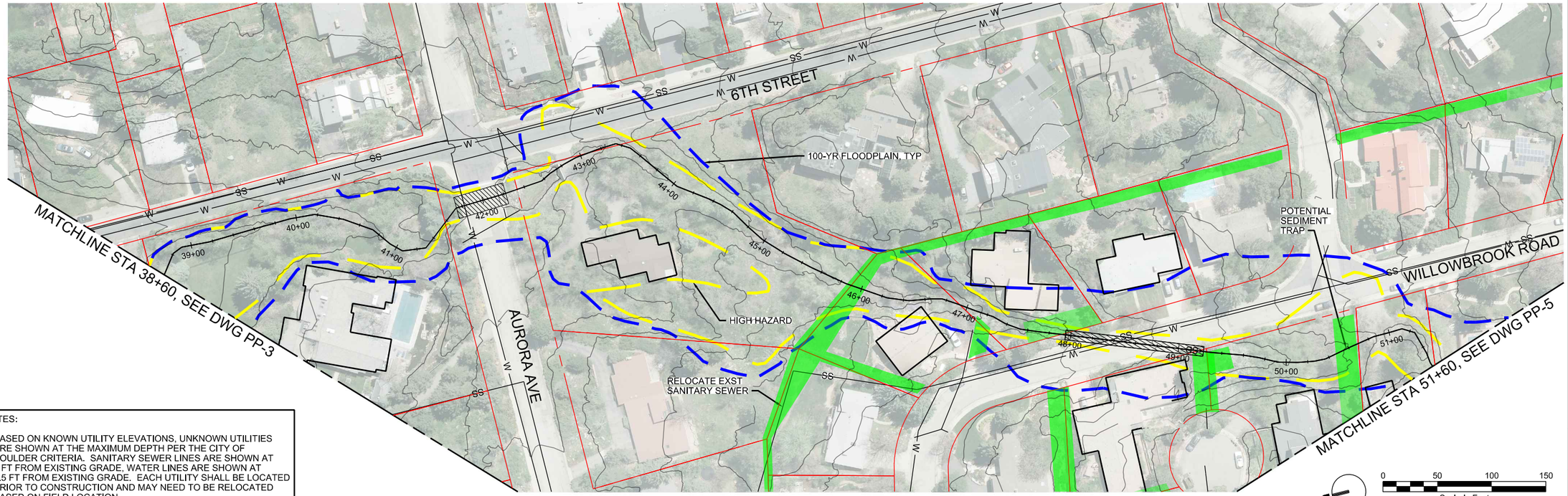

NOTES:

1. BASED ON KNOWN UTILITY ELEVATIONS, UNKNOWN UTILITIES ARE SHOWN AT THE MAXIMUM DEPTH PER THE CITY OF BOULDER CRITERIA. SANITARY SEWER LINES ARE SHOWN AT 3 FT FROM EXISTING GRADE. WATER LINES ARE SHOWN AT 4.5 FT FROM EXISTING GRADE. EACH UTILITY SHALL BE LOCATED PRIOR TO CONSTRUCTION AND MAY NEED TO BE RELOCATED BASED ON FIELD LOCATION.

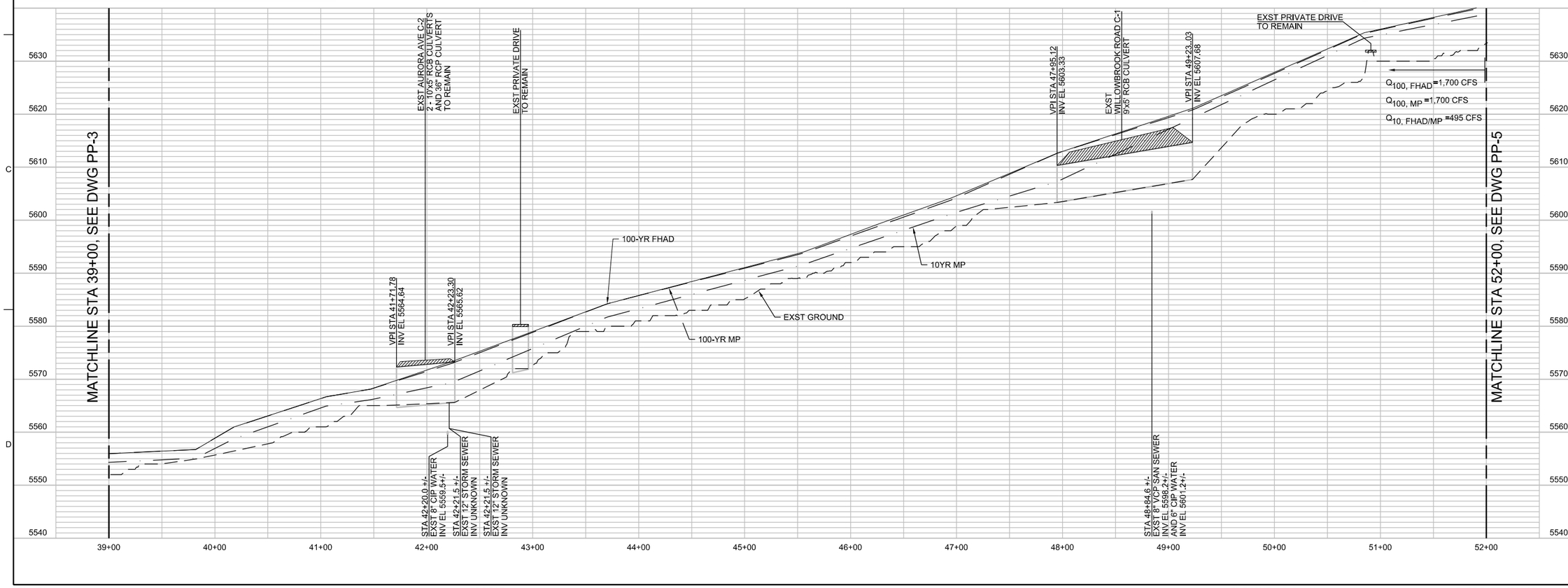

PRELIMINARY NOT FOR CONSTRUCTION

NO.	DATE	REVISION	BY	APVD

DSGN M GARDNER | DR B SCHAFROTH | CHK M LYNCH | APVD M LYNCH

©CH2M HILL 2015, ALL RIGHTS RESERVED.

REUSE OF DOCUMENTS: THIS DOCUMENT, AND THE IDEAS AND DESIGNS INCORPORATED HEREIN, AS AN INSTRUMENT OF PROFESSIONAL SERVICE, IS THE PROPERTY OF CH2M HILL AND IS NOT TO BE USED, IN WHOLE OR IN PART, FOR ANY OTHER PROJECT WITHOUT THE WRITTEN AUTHORIZATION OF CH2M HILL.

9193 SOUTH JAMACIA ST
ENGLEWOOD, CO 80112

CH2MHILL®

GREGORY CANYON CREEK MASTER PLAN

PLAN AND PROFILE
STA 38+60 TO STA 51+60

SCHEMATIC DESIGN

VERIFY SCALE
BAR IS ONE INCH ON ORIGINAL DRAWING.
0 1"

DATE	JULY 2015
PROJ	498924
DWG	PP-4
SHEET	of

NOTES:

1. BASED ON KNOWN UTILITY ELEVATIONS, UNKNOWN UTILITIES ARE SHOWN AT THE MAXIMUM DEPTH PER THE CITY OF BOULDER CRITERIA. SANITARY SEWER LINES ARE SHOWN AT 3 FT FROM EXISTING GRADE, WATER LINES ARE SHOWN AT 4.5 FT FROM EXISTING GRADE. EACH UTILITY SHALL BE LOCATED PRIOR TO CONSTRUCTION AND MAY NEED TO BE RELOCATED BASED ON FIELD LOCATION.

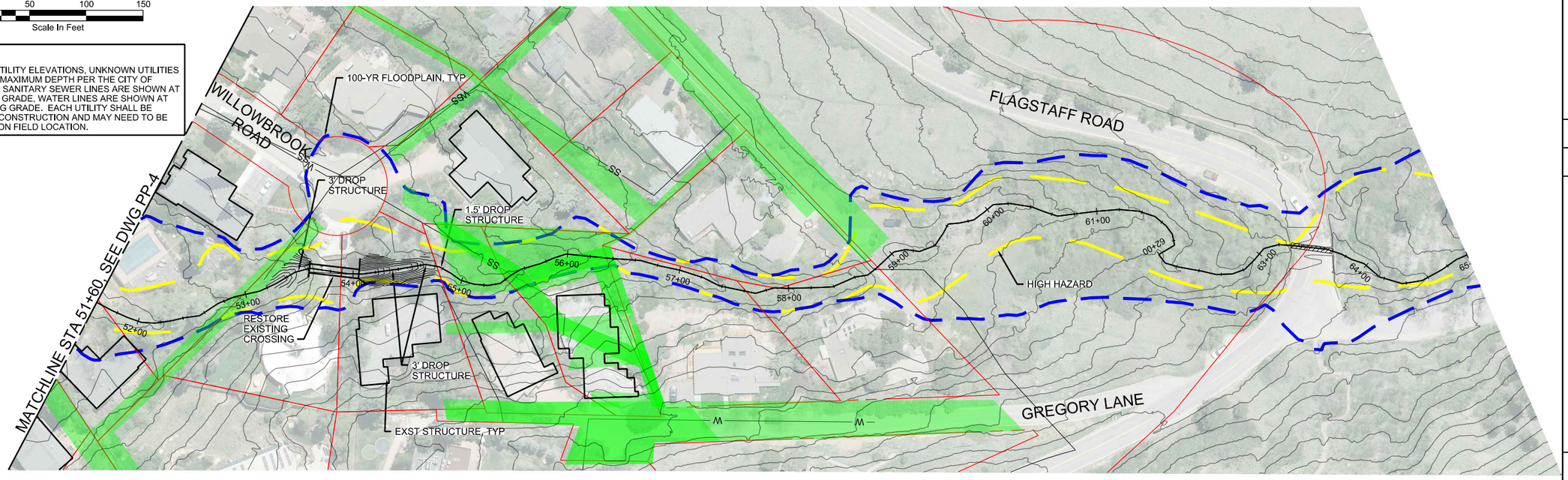

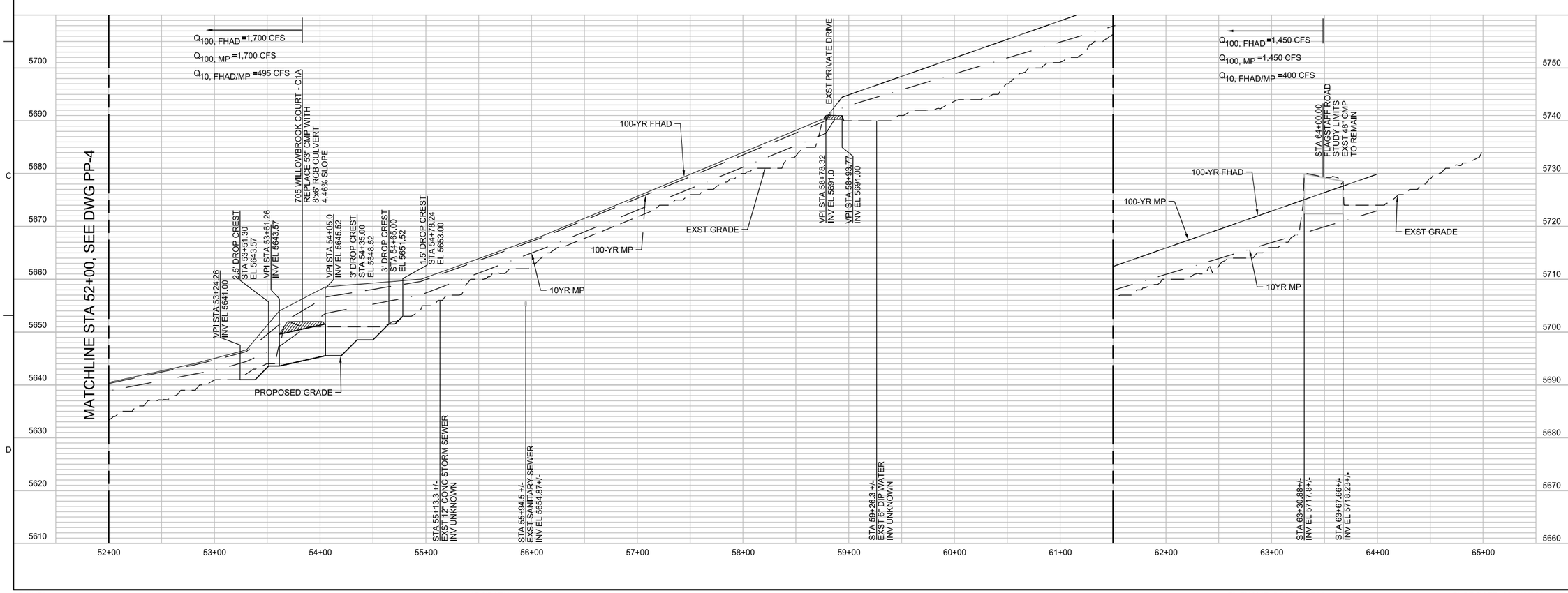

PRELIMINARY NOT FOR CONSTRUCTION

NO.	DATE	REVISION	BY	APVD

DSGN M GARDNER | DR B SCHAFROTH | CHK M LYNCH | APVD M LYNCH

©CH2M HILL 2015, ALL RIGHTS RESERVED.

REUSE OF DOCUMENTS: THIS DOCUMENT, AND THE IDEAS AND DESIGNS INCORPORATED HEREIN, AS AN INSTRUMENT OF PROFESSIONAL SERVICE, IS THE PROPERTY OF CH2M HILL AND IS NOT TO BE USED, IN WHOLE OR IN PART, FOR ANY OTHER PROJECT WITHOUT THE WRITTEN AUTHORIZATION OF CH2M HILL.

9193 SOUTH JAMACIA ST
ENGLEWOOD, CO 80112

CH2MHILL®

GREGORY CANYON CREEK MASTER PLAN

PLAN AND PROFILE
STA 51+60 TO STA 65+00

SCHEMATIC DESIGN

VERIFY SCALE
BAR IS ONE INCH ON ORIGINAL DRAWING.
0 1"

DATE	JULY 2015
PROJ	498924
DWG	PP-5
SHEET	of

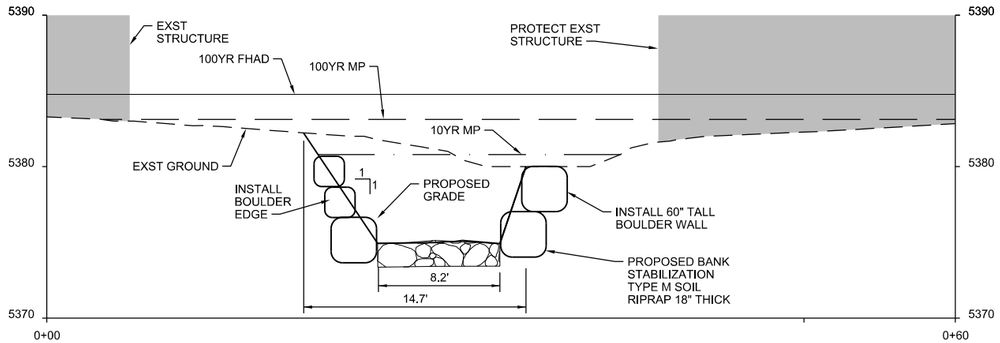

A SECTION 5+20
1"=5'-0"
PP-1

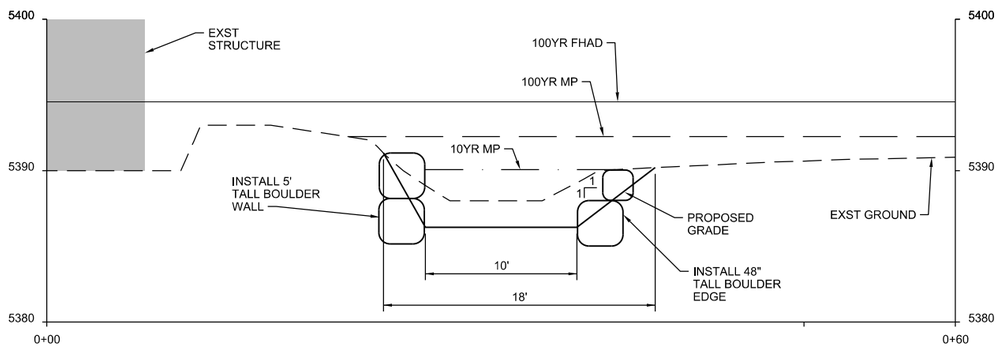

B SECTION 7+60
1"=5'-0"
PP-1

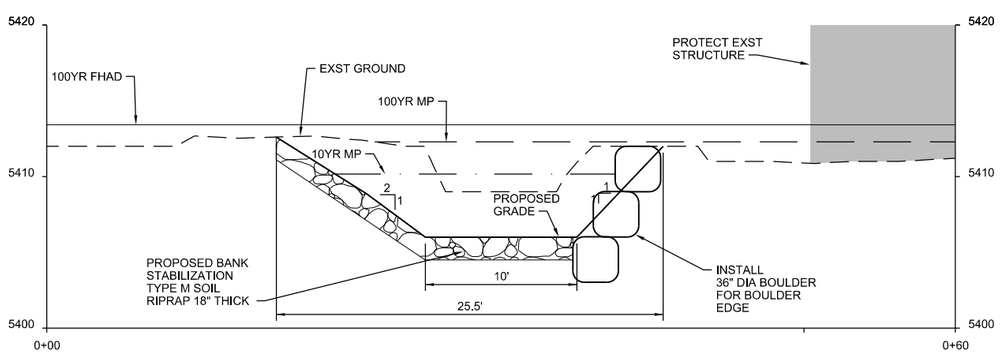

C SECTION 12+60
1"=5'-0"
PP-1

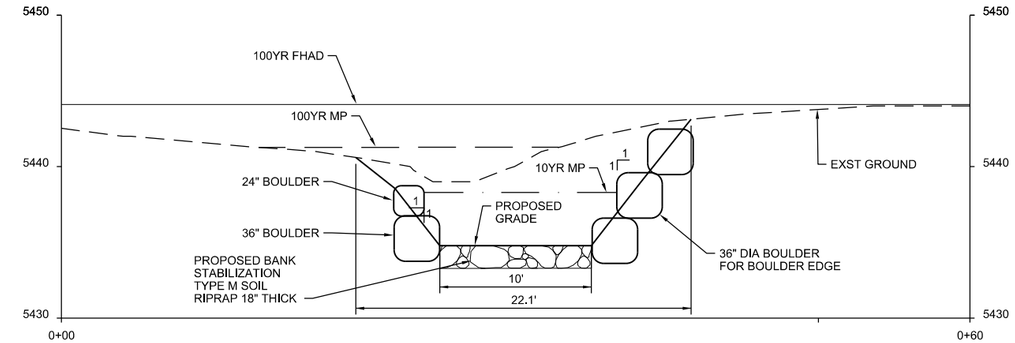

D SECTION 19+80
1"=5'-0"
PP-2

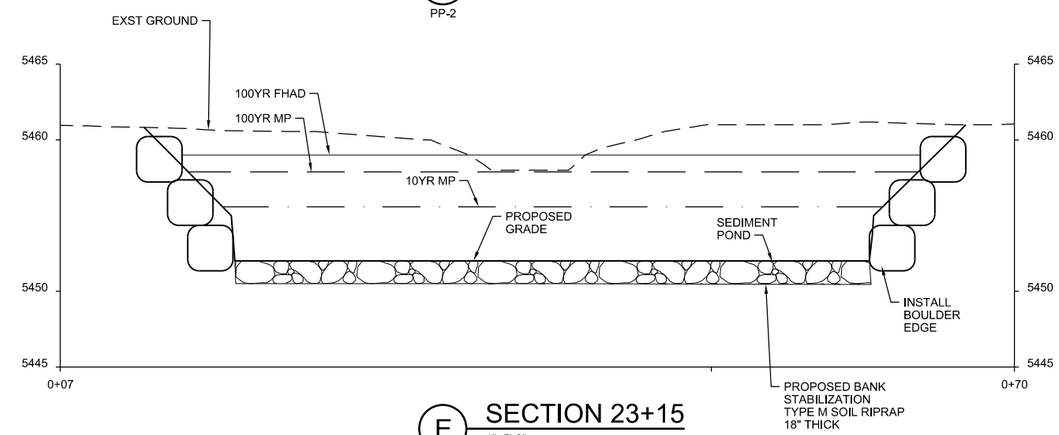

E SECTION 23+15
1"=5'-0"
PP-2

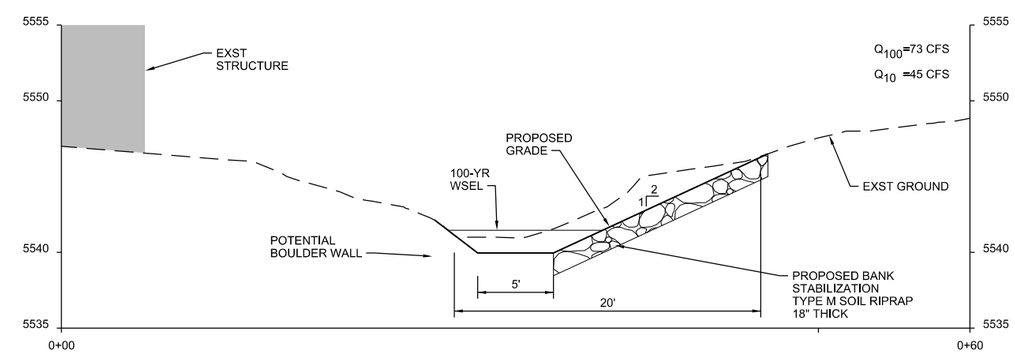

F SECTION 1+90 EUCLID TRIBUTARY
1"=5'-0"
PP-2

PRELIMINARY NOT FOR CONSTRUCTION

NO.	DATE	REVISION	BY	APVD

DSGN M GARDNER | DR B SCHAEROTH | CHK M LYNCH | APVD M LYNCH

©CH2M HILL 2013, ALL RIGHTS RESERVED.

REUSE OF DOCUMENTS: THIS DOCUMENT, AND THE IDEAS AND DESIGNS INCORPORATED HEREIN, AS AN INSTRUMENT OF PROFESSIONAL SERVICE, IS THE PROPERTY OF CH2M HILL AND IS NOT TO BE USED, IN WHOLE OR IN PART, FOR ANY OTHER PROJECT WITHOUT THE WRITTEN AUTHORIZATION OF CH2M HILL.

9193 SOUTH JAMACIA ST
ENGLEWOOD, CO 80112

CH2MHILL®

GREGORY CANYON CREEK MASTER PLAN

SECTIONS

SCHEMATIC DESIGN

VERIFY SCALE
BAR IS ONE INCH ON ORIGINAL DRAWING.
0 1"

DATE	JULY 2015
PROJ	498924
DWG	C-1
SHEET	of

SEDIMENT BASIN (TYP)
NTS

PRELIMINARY NOT FOR CONSTRUCTION

NO.	DATE	REVISION	BY	APVD

DSGN M GARDNER | DR B SCHAEROTH | CHK M LYNCH | APVD M LYNCH

©CH2M HILL 2013, ALL RIGHTS RESERVED.

REUSE OF DOCUMENTS: THIS DOCUMENT, AND THE IDEAS AND DESIGNS INCORPORATED HEREIN, AS AN INSTRUMENT OF PROFESSIONAL SERVICE, IS THE PROPERTY OF CH2M HILL AND IS NOT TO BE USED, IN WHOLE OR IN PART, FOR ANY OTHER PROJECT WITHOUT THE WRITTEN AUTHORIZATION OF CH2M HILL.

9193 SOUTH JAMACIA ST
ENGLEWOOD, CO 80112

CH2MHILL®

GREGORY CANYON CREEK MASTER PLAN

637 PENNSYLVANIA AVE GRADING

SCHEMATIC DESIGN

VERIFY SCALE
BAR IS ONE INCH ON ORIGINAL DRAWING.
0 1"

DATE	JULY 2015
PROJ	498924
DWG	C-2
SHEET	of

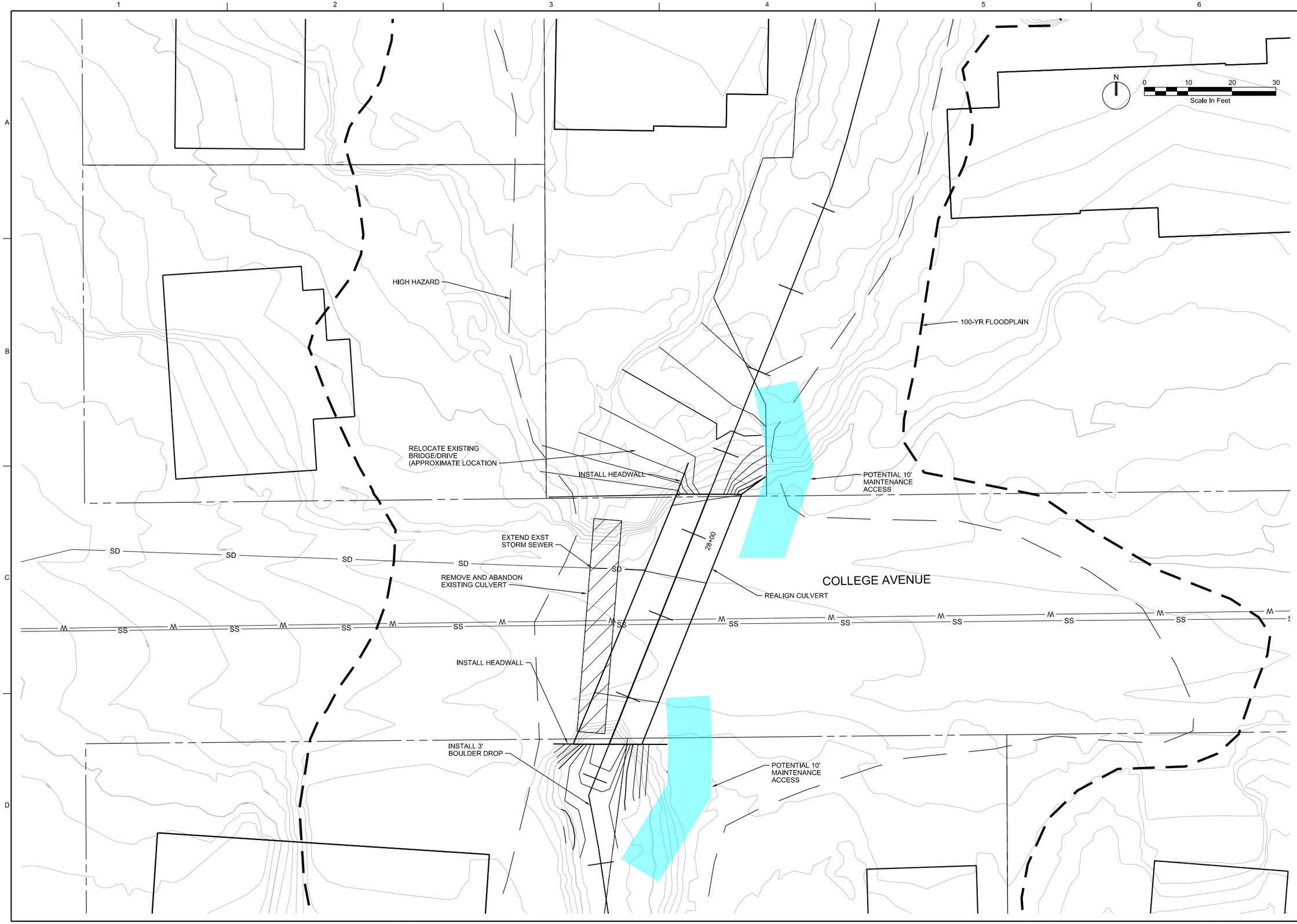

PRELIMINARY
NOT FOR
CONSTRUCTION

NO.	DATE	REVISION	BY	APVD

DSGN	M GARDNER	DR	B SCHAEROTH
CHK	M LYNCH	APVD	M LYNCH

©CH2M HILL 2013. ALL RIGHTS RESERVED.

9193 SOUTH JAMACIA ST
ENGLEWOOD, CO 80112

REUSE OF DOCUMENTS: THIS DOCUMENT, AND THE IDEAS AND DESIGNS INCORPORATED HEREIN, AS AN INSTRUMENT OF PROFESSIONAL SERVICE, IS THE PROPERTY OF CH2M HILL AND IS NOT TO BE USED, IN WHOLE OR IN PART, FOR ANY OTHER PROJECT WITHOUT THE WRITTEN AUTHORIZATION OF CH2M HILL.

CH2MHILL®

GREGORY CANYON CREEK MASTER PLAN

617 COLLEGE AVE GRADING

SCHEMATIC DESIGN

VERIFY SCALE
BAR IS ONE INCH ON ORIGINAL DRAWING.
0 1"

DATE	JULY 2015
PROJ	498924
DWG	C-3
SHEET	of

1 TYPICAL BOULDER DROP STRUCTURE

3 TYPICAL BOULDER DROP STRUCTURE

2 TYPICAL BOULDER DROP STRUCTURE

4 BOULDER DROP STRUCTURE IN SERIES

PRELIMINARY
NOT FOR
CONSTRUCTION

NO.	DATE	REVISION	BY	APVD

DSGN	DR	CHK	APVD
M GARDNER	B SCHAEROTH	M LYNCH	M LYNCH

©CH2M HILL 2013. ALL RIGHTS RESERVED.

9193 SOUTH JAMACIA ST
ENGLEWOOD, CO 80112

REUSE OF DOCUMENTS: THIS DOCUMENT, AND THE IDEAS AND DESIGNS INCORPORATED HEREIN, AS AN INSTRUMENT OF PROFESSIONAL SERVICE, IS THE PROPERTY OF CH2M HILL AND IS NOT TO BE USED, IN WHOLE OR IN PART, FOR ANY OTHER PROJECT WITHOUT THE WRITTEN AUTHORIZATION OF CH2M HILL.

CH2MHILL®

GREGORY CANYON CREEK MASTER PLAN

REFERENCE IMAGES

VERIFY SCALE
BAR IS ONE INCH ON ORIGINAL DRAWING.
0 1"

DATE	JULY 2015
PROJ	498924
DWG	C-4
SHEET	of

SCHEMATIC DESIGN

1 SCULPTED CONCRETE DROP STRUCTURE

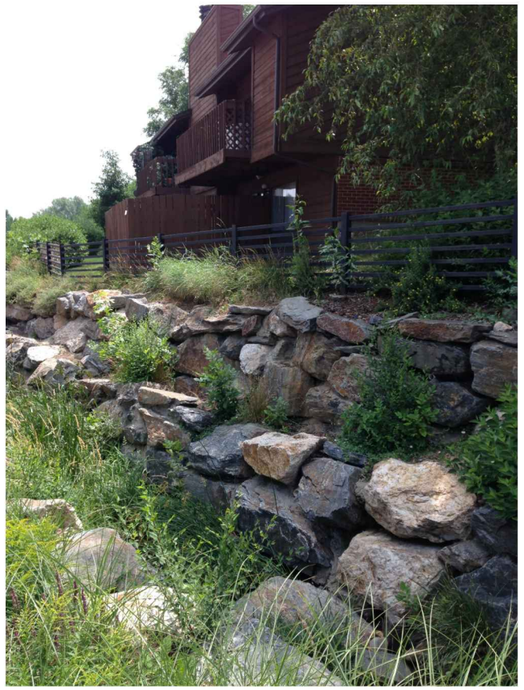

2 TYPICAL BOULDER WALL

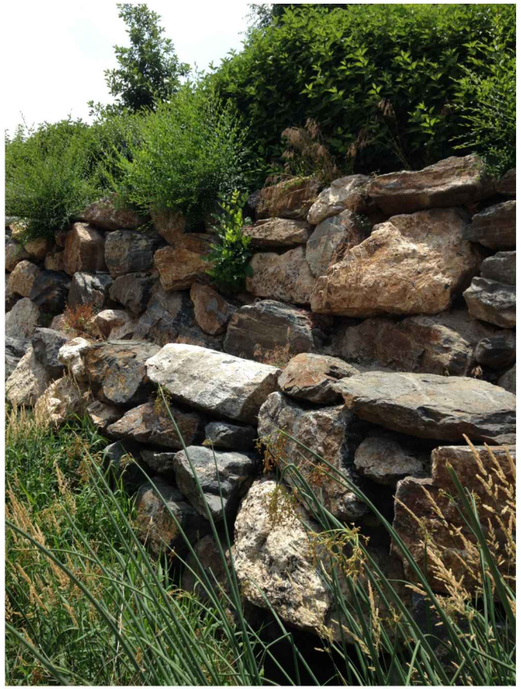

3 TYPICAL BOULDER WALL

4 TYPICAL HEADWALL

PRELIMINARY
NOT FOR
CONSTRUCTION

NO.	DATE	REVISION	BY	APVD

DSGN M GARDNER | DR B SCHAEROTH | CHK M LYNCH | APVD M LYNCH

©CH2M HILL 2013. ALL RIGHTS RESERVED.

9193 SOUTH JAMACIA ST
ENGLEWOOD, CO 80112

CH2MHILL®

GREGORY CANYON CREEK MASTER PLAN

REFERENCE IMAGES

REUSE OF DOCUMENTS: THIS DOCUMENT, AND THE IDEAS AND DESIGNS INCORPORATED HEREIN, AS AN INSTRUMENT OF PROFESSIONAL SERVICE, IS THE PROPERTY OF CH2M HILL AND IS NOT TO BE USED, IN WHOLE OR IN PART, FOR ANY OTHER PROJECT WITHOUT THE WRITTEN AUTHORIZATION OF CH2M HILL.

VERIFY SCALE
BAR IS ONE INCH ON ORIGINAL DRAWING.
0 1"

DATE	JULY 2015
PROJ	498924
DWG	C-5
SHEET	of

SCHEMATIC DESIGN

1 TYPICAL HEADWALL

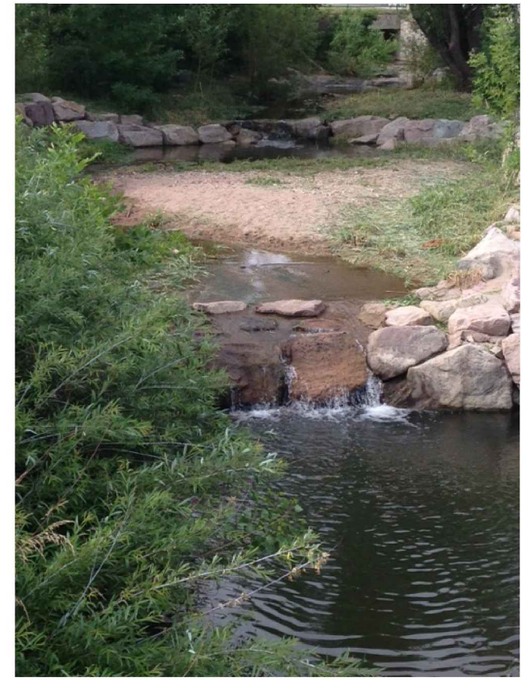

3 INLINE SEDIMENT BASIN

2 TYPICAL SOIL RIPRAP BANK PROTECTION

4 INLINE SEDIMENT BASIN

PRELIMINARY
NOT FOR
CONSTRUCTION

NO.	DATE	REVISION	BY	APVD

DSGN M GARDNER | DR B SCHAEROTH | CHK M LYNCH | APVD M LYNCH

©CH2M HILL 2013. ALL RIGHTS RESERVED.

9193 SOUTH JAMACIA ST
ENGLEWOOD, CO 80112

REUSE OF DOCUMENTS: THIS DOCUMENT, AND THE IDEAS AND DESIGNS INCORPORATED HEREIN, AS AN INSTRUMENT OF PROFESSIONAL SERVICE, IS THE PROPERTY OF CH2M HILL AND IS NOT TO BE USED, IN WHOLE OR IN PART, FOR ANY OTHER PROJECT WITHOUT THE WRITTEN AUTHORIZATION OF CH2M HILL.

CH2MHILL®

GREGORY CANYON CREEK MASTER PLAN

REFERENCE IMAGES

SCHEMATIC DESIGN

VERIFY SCALE
BAR IS ONE INCH ON ORIGINAL DRAWING.
0 1"

DATE	JULY 2015
PROJ	498924
DWG	C-6
SHEET	of