SITE CONSTRUCTION DRAWINGS
STORE #943
3365 DIRECTIONAL HWY
BOULDER, CO 80301

PROJECT TEAM:

OWNER/APPLICANT:
KG STORE 943, L.L.C.
6400 WESTOWN PARKWAY
WEST DES MOINES, IA 50266
CONTACT: RYAN HALDER
PH: 515.457.6232

SURVEYOR:
OLSSON ASSOCIATES
4690 TABLE MOUNTAIN DRIVE, SUITE 200
GOLDEN, CO 80403
CONTACT: DANA SPERLING
PH: 303.237.2072

ELECTRIC/GAS:
XCEL
2655 63RD STREET
BOULDER, CO 80301
CONTACT: JOSE COMPOS
PH: 303.245.2349

ENGINEER:
OLSSON ASSOCIATES
4690 TABLE MOUNTAIN DRIVE, SUITE 200
GOLDEN, CO 80403
CONTACT: JOSH ERRAMOUSPE
PH: 303.237.2072

GEOTECHNICAL ENGINEER:
OLSSON ASSOCIATES
8720 SOUTH 114TH ST, SUITE 107
LA VISTA, NE 68128
CONTACT: ED SCHNACKENBERG
PH: 402.827.7220

TELEPHONE:
CENTURYLINK
1860 SOUTH FLATIRON COURT
BOULDER, CO 80301
CONTACT: CATHY DUNBAR
PH: 303.441.7113

LANDSCAPE ARCHITECT:
OLSSON ASSOCIATES
7175 VISTA DRIVE
WEST DES MOINES, IA 50322
CONTACT: JOE STOBERL
PH: 515.331.6517

WATER:
BOULDER PUBLIC WORKS
1739 BROADWAY
BOULDER, CO 80302
CONTACT: MATT ENGLISH
PH: 303.441.1880

SANITARY & STORM SEWER:
BOULDER PUBLIC WORKS
1739 BROADWAY
BOULDER, CO 80302
CONTACT: MATT ENGLISH
PH: 303.441.1880

WE GO ALL OUT!

LEGAL DESCRIPTION:

LOT 1 KUM & GO 943 SUBDIVISION, A TRACT OF LAND IN THE SOUTHWEST QUARTER OF THE NORTHWEST QUARTER OF SECTION 21, TOWNSHIP 1 NORTH, RANGE 70 WEST OF THE 6TH PRINCIPAL MERIDIAN.

CITY OF BOULDER STANDARD CONSTRUCTION NOTES:

1. ALL WORK SHALL BE PERFORMED IN ACCORDANCE WITH THE "DESIGN AND CONSTRUCTION STANDARDS" OF THE CITY OF BOULDER, AND SHALL BE COMPLETED TO THE SATISFACTION OF THE DIRECTOR OF PUBLIC WORKS. IN THE EVENT THAT A DESIGN ELEMENT DOES NOT REFLECT CITY STANDARDS, THE MATTER MUST BE IMMEDIATELY BROUGHT TO THE ATTENTION OF THE ENGINEER AND THE DIRECTOR OF PUBLIC WORKS. THE ENGINEER SHALL BE RESPONSIBLE FOR RECOMMENDING A SOLUTION OR ALTERNATIVE SOLUTIONS TO THE CITY FOR REVIEW AND APPROVAL."
2. THE APPROVAL OF A CONSTRUCTION PLAN DOES NOT RELIEVE THE CONTRACTOR OF THE RESPONSIBILITY OF CONSTRUCTING WORKABLE PUBLIC IMPROVEMENTS. ALL REVISIONS AND/OR CORRECTIONS REQUIRED WILL BE SOLELY THE CONTRACTOR'S RESPONSIBILITY, AND AT THEIR EXPENSE.
3. THESE PLANS HAVE BEEN CHECKED BY THE CITY OF BOULDER ONLY FOR CONFORMANCE WITH THE "DESIGN AND CONSTRUCTION STANDARDS," COMPLIANCE WITH DEVELOPMENT AGREEMENT CONDITIONS, AND FOR GENERAL CONCEPTUAL APPROVAL OF PUBLIC IMPROVEMENTS AS SHOWN. THE CITY'S REVIEW DOES NOT VERIFY OR ENSURE THE ACCURACY OF EXISTING OR PROPOSED DIMENSIONS, LINES, COORDINATES, OR GRADES SHOWN, INCLUDING ALL EXISTING UTILITIES SHOWN OR NOT SHOWN.
4. UTILITY LOCATIONS SHOWN REFLECT AVAILABLE RECORD DATA. THE CONTRACTOR SHALL TAKE PRECAUTIONARY MEASURES TO PROTECT ALL UTILITY LINES SHOWN AND OTHER UTILITY LINES OTHERWISE LOCATED. THE CONTRACTOR SHALL CONTACT THE "UTILITY NOTIFICATION CENTER OF COLORADO" AT 1-800-922-1987 FOR UTILITY LOCATES 24 HOURS PRIOR TO BEGINNING CONSTRUCTION.
5. BEFORE WORK BEGINS, THE CONTRACTOR SHALL OBTAIN A PERMIT TO WORK IN THE RIGHT-OF-WAY FROM THE CITY AND MUST NOTIFY THE CITY RIGHT-OF-WAY INSPECTION STAFF AT LEAST 24 HOURS IN ADVANCE OF COMMENCING CONSTRUCTION ACTIVITIES.
6. THE CONTRACTOR SHALL OBTAIN AND MAINTAIN A COMPLETE AND APPROVED SET OF CONSTRUCTION PLANS. THESE DRAWINGS, AND ANY REQUIRED PERMITS, SHALL BE AVAILABLE AT THE PROJECT SITE AT ALL TIMES AND SHALL BE MADE AVAILABLE TO CITY STAFF UPON REQUEST. IF CONSTRUCTION PLANS ARE NOT READILY AVAILABLE AT THE PROJECT SITE, THE DIRECTOR OF PUBLIC WORKS MAY ISSUE A STOP WORK ORDER AND HALT ALL CONSTRUCTION ACTIVITIES PENDING COMPLIANCE BY THE CONTRACTOR.
7. THE CONTRACTOR AGREES TO COMPLY WITH THE PROVISIONS OF THE TRAFFIC CONTROL PLAN AND THE CURRENT EDITION OF THE "MANUAL ON UNIFORM TRAFFIC CONTROL DEVICES," "TEMPORARY TRAFFIC CONTROL" SECTION, FOR CONSTRUCTION SIGNAGE AND TRAFFIC CONTROL.
8. ALL SURPLUS MATERIALS, TOOLS, AND TEMPORARY STRUCTURES, FURNISHED BY THE CONTRACTOR, SHALL BE REMOVED FROM THE PROJECT SITE BY THE CONTRACTOR. ALL DEBRIS AND RUBBISH CAUSED BY THE OPERATIONS OF THE CONTRACTOR SHALL BE REMOVED, AND THE AREA OCCUPIED DURING CONSTRUCTION ACTIVITIES SHALL BE RESTORED TO ITS ORIGINAL CONDITION, WITHIN 48 HOURS OF PROJECT COMPLETION, UNLESS OTHERWISE DIRECTED BY THE DIRECTOR OF PUBLIC WORKS.
9. THE CONTRACTOR SHALL PROVIDE TREE AND LANDSCAPE PROTECTION AS SET FORTH IN CHAPTER 6-6, "PROTECTION OF TREES AND PLANTS," BOULDER REVISED CODE (B.R.C.) 1981 AND THE CITY OF BOULDER DESIGN AND CONSTRUCTION STANDARDS (DCS). ALL LANDSCAPING SHALL BE PROVIDED AND MAINTAINED IN COMPLIANCE WITH THE APPROVED LANDSCAPING PLAN, B.R.C. AND DCS.
10. THE CONTRACTOR IS REQUIRED TO PROVIDE AND MAINTAIN EROSION AND SEDIMENT CONTROL MEASURES IN ACCORDANCE WITH THE URBAN DRAINAGE AND FLOOD CONTROL DISTRICT "URBAN STORM DRAINAGE CRITERIA MANUAL VOLUME 3", THE
11. M-STANDARD PLANS OF THE COLORADO DEPARTMENT OF TRANSPORTATION, AND THE APPROVED EROSION CONTROL PLAN. THE DIRECTOR OF PUBLIC WORKS MAY REQUIRE THE CONTRACTOR TO PROVIDE ADDITIONAL EROSION CONTROL MEASURES DUE TO UNFORESEEN EROSION PROBLEMS OR IF THE PLANS DO NOT FUNCTION AS INTENDED.
12. THE CITY OF BOULDER REQUIRES THAT SIDEWALKS CONSTRUCTED HAVE A CROSS SLOPE OF LESS THAN 2%. SIDEWALKS SHALL BE DESIGNED AND CONSTRUCTED WITH CROSS SLOPES SUFFICIENTLY LESS THAN 2% TO ENSURE THAT THEY DO NOT EXCEED THE 2% MAXIMUM.

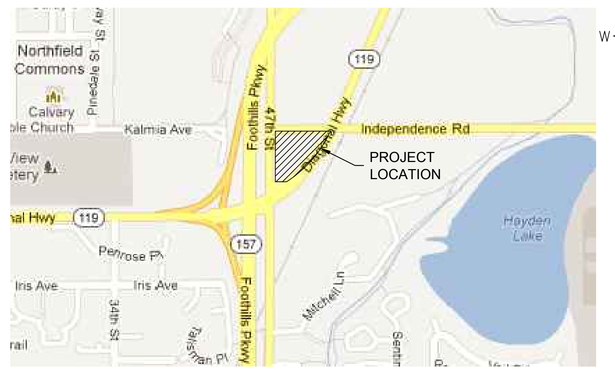

VICINITY MAP
NOT TO SCALE

SITE DATA		
GROSS LOT AREA (LOT 1)		±78,311 S.F.
		±1.798 ACRES
REQUIRED PARKING	STANDARD	15 STALLS
	ADA	1 STALL
	TOTAL	16 STALLS
	PARKING RATIO = 1 CAR/300 S.F.	
PROPOSED PARKING	STANDARD	15 STALLS
	ADA	1 STALLS
	TOTAL	16 STALLS
	PARKING RATIO = 1 CAR/300 S.F.	
BICYCLE PARKING		4 SPACES
TYPE OF USE		CONVENIENCE STORE WITH FUEL
GROSS FLOOR AREA		5,081 S.F (6.5%)
CANOPY/DISPENSER ARRANGEMENT		10 DISPENSERS (DOUBLE)
HEIGHT		BUILDING: 24'-2.5" TOP OF MASONRY: 9'-2" CANOPY: 19'-6" MIN.
GROSS CANOPY AREA		7,644 SF
FAR (INCLUDING CANOPY)		0.16
LANDSCAPE COVERAGE		30,193 SF (38.6%)
PAVING/HARDSCAPE COVERAGE		43,037 SF (54.9%)
ZONING INFORMATION		
TRANSITIONAL BUSINESS (BT-1)		
MINIMUM LOT AREA (SQUARE FEET)		0
MINIMUM LOT WIDTH (FEET)		NO MINIMUM
SITE AREA PER UNIT (SQUARE FEET)		NO MINIMUM
FRONT YARD SETBACK - BUILDING AND LANDSCAPE (DIAGONAL HIGHWAY)		20 FT
FRONT YARD SETBACK - FUELING PUMP (DIAGONAL HIGHWAY)		25 FT
SIDE YARD SETBACK - BUILDING AND LANDSCAPE (INDEPENDENCE ROAD)		20 FT
SIDE YARD SETBACK - FUELING PUMP (INDEPENDENCE ROAD)		25 FT
REAR YARD SETBACK - BUILDING AND LANDSCAPE (47TH STREET)		15 FT
REAR YARD SETBACK - FUELING PUMP (47TH STREET)		25 FT
MAXIMUM HEIGHT (FEET)		35 FT
MAXIMUM BUILDING COVERAGE		NO MAXIMUM
MAXIMUM IMPERVIOUS COVERAGE		90 %
MAXIMUM FLOOR AREA		NONE SPECIFIED

SHEET INDEX

REV			
	1	COVER SHEET	C0.0
	2	GENERAL NOTES	C1.1
	3	SITE PLAN	C1.2
	4	EXISTING CONDITIONS PLAN	C1.3
	5	DEMOLITION PLAN	C1.4
	6	GRADING AND DRAINAGE PLAN	C2.1
	7	EROSION CONTROL PLAN	C2.2
	8	EROSION CONTROL DETAILS	C2.3
	9	EROSION CONTROL DETAILS	C2.4
	10	EROSION CONTROL DETAILS	C2.5
	11	UTILITY PLAN	C3.1
	12	WATER MAIN EXTENSION PLAN	C3.2
	13	SANITARY SEWER EXTENSION PLAN	C3.3
	14	PAVING GEOMETRICS AND SPOT ELEVATION PLAN	C4.1
	15	PAVING GEOMETRICS DETAILS	C4.2
	16	SPOT ELEVATION TABLE	C4.3
	17	ADA COMPLIANCE PLAN	C4.4
	18	ROADWAY DEMOLITION PLAN	C4.5
	19	ROADWAY PLAN AND PROFILE	C4.6
	20	ROADWAY CROSS SECTIONS	C4.7
	21	CONSTRUCTION DETAILS	C5.1
	22	CONSTRUCTION DETAILS	C5.2
	23	CONSTRUCTION DETAILS	C5.3
	24	CONSTRUCTION DETAILS	C5.4
	25	CONSTRUCTION DETAILS	C5.5
	26	LANDSCAPE PLAN	L1.1
	27	LANDSCAPE NOTES AND DETAILS	L1.2
	28	FINAL IRRIGATION PLAN	I1.1
	29	IRRIGATION NOTES AND DETAILS	I1.2
	30	IRRIGATION DETAILS	I1.3
	31	IRRIGATION DETAILS	I1.4
	32	PHOTOMETRIC PLAN	SE1.1

BENCHMARKS:

1. PROJECT BENCHMARK: THE PUBLISHED VALUES OF BOULDER COUNTY PRIMARY MONUMENT CONTROL STATION "B 322 RESET". EL=5508.90' (NAVD88), N:1272428.69, E:3061900.56
2. SITE BENCHMARK: 3" ALUMINUM CAP LOCATED IN THE INTERSECTION OF 47TH STREET AND INDEPENDENCE ROAD. EL=5304.38' (NAVD88), N:1257929.36, E:3072507.66

BASIS OF BEARINGS:

BEARINGS ARE BASED ON THE WEST LINE OF THE NW1/4 OF SECTION 21 AS HAVING A BEARING OF N00°06'56"W FROM THE W1/4 CORNER BEING MONUMENTED WITH A 3" ALUMINUM CAP TO THE W-N1/16 CORNER BEING ALSO MONUMENTED WITH A 3" ALUMINUM CAP AS SHOWN HEREON.

FLOOD ZONE:

THE SUBJECT PROPERTY FALLS WITHIN ZONE "X" DESCRIBED AS AREAS DETERMINED TO BE OUTSIDE THE 500-YEAR FLOODPLAIN; ACCORDING TO FEMA FLOOD INSURANCE RATE MAP 08013C0415F WITH AN EFFECTIVE DATE OF JUNE 2, 1995.

THIS PROJECT IS REGISTERED UNDER THE LEED GREEN BUILDING CERTIFICATION PROGRAM.

811 Know what's below. Call before you dig.
CALL 811 SEVENTY-TWO HOURS PRIOR TO DIGGING, GRADING OR EXCAVATING FOR THE MARKING OF UNDERGROUND MEMBER UTILITIES

CITY APPROVAL STAMP:

OLSSON ASSOCIATES
4690 Table Mountain Drive
Suite 200
Golden, CO 80403
TEL 303.237.2072
FAX 303.237.2659
OA # 012-1417
www.olssonassociates.com

COLORADO LICENSED PROFESSIONAL ENGINEER JOSHUA ERRAMOUSPE 06/20/14 42161

6400 Westown Parkway
West Des Moines, Iowa
50266
P: 515-226-0128
F: 515-223-9873

#943 - BOULDER, COLORADO
3365 DIAGONAL HWY.
COVER SHEET

KG PROJECT TEAM:
RDR: JXH
SDM: RJH
CPM: TLK

△	DATE	REVISION DESCRIPTION

REVISIONS

DATE: 06-20-2014

SHEET NUMBER:
C0.0
01 OF 32

DOCUMENT REVISION DATE: AUGUST 2012
DWG: F:\Projects\012-1417_LDVP\Final_Plans\121417_COV.dwg USER: sbower
DATE: Jul 01, 2014 2:39pm XREFS: 121417_TBLK_CD

GENERAL SITE NOTES:

1. THE CONSTRUCTION COVERED BY THESE PLANS ON PRIVATE PROPERTY SHALL CONFORM TO SPECIFICATIONS SHOWN ON THESE PLANS.
2. ALL WORK WITHIN PUBLIC RIGHT OF WAY AND EASEMENTS SHALL CONFORM TO THE TECHNICAL SPECIFICATIONS AND DESIGN CRITERIA FOR PUBLIC IMPROVEMENT PROJECTS OF THE CITY OF BOULDER, THE COUNTY OF BOULDER, AND THE GRANTOR OF THE EASEMENT.
3. THE CONTRACTOR SHALL OBTAIN A COPY OF THE LATEST STANDARD SPECIFICATIONS AND DETAILS OF ALL AGENCIES EXERCISING JURISDICTION OVER THIS PROJECT. A COPY OF THESE SPECIFICATIONS AND DETAILS SHALL BE MAINTAINED ON THE JOBSITE AT ALL TIMES. A COPY OF ALL APPLICABLE STANDARD DETAILS AND SPECIFICATIONS ARE INCORPORATED HEREIN BY REFERENCE.
4. THE CONTRACTOR SHALL HAVE IN HIS POSSESSION AT ALL TIMES (1) SIGNED COPY OF THE PLANS, STANDARDS, AND SPECIFICATIONS AS APPROVED BY THE APPROPRIATE GOVERNING AGENCY. THE CONTRACTOR SHALL OBTAIN WRITTEN APPROVAL FOR ANY VARIANCE TO THE ABOVE DOCUMENTS.
5. THE CONTRACTOR SHALL NOT CHANGE OR DEVIATE FROM THE PLANS WITHOUT FIRST OBTAINING WRITTEN APPROVAL FROM THE OWNER AND ENGINEER.
6. THE EXISTING UTILITY LOCATIONS SHOWN ON THE PLANS ARE APPROXIMATE AND MAY NOT INCLUDE ALL LINES PRESENT. THE CONTRACTOR SHALL BE RESPONSIBLE FOR CALLING ONE CALL OF COLORADO AT 811, AND COORDINATE FIELD LOCATION OF EXISTING UNDERGROUND UTILITIES PRIOR TO BEGINNING GRADING AND UTILITY WORK. !!STOP!! CALL BEFORE YOU DIG!!
7. LOCATIONS AND ELEVATIONS OF EXISTING IMPROVEMENTS TO BE MET (OR AVOIDED) BY WORK TO BE DONE SHALL BE CONFIRMED BY THE CONTRACTOR THROUGH FIELD EXPLORATIONS PRIOR TO CONSTRUCTION. CONTRACTOR SHALL REPORT TO THE ENGINEER OR CITY INSPECTOR ANY DISCREPANCIES BETWEEN HIS MEASUREMENTS AND THESE PLANS.
8. THE CONTRACTOR SHALL BE RESPONSIBLE FOR NOTIFYING THE APPROPRIATE FIRE DEPARTMENT OF ALL STREET CLOSURES AND EXISTING FIRE HYDRANTS TAKEN OUT OF SERVICE AT LEAST 48 HOURS PRIOR TO CONSTRUCTION.
9. THE CONTRACTOR SHALL BE RESPONSIBLE FOR OBTAINING ALL PERMITS NOT OBTAINED BY THE OWNER OR OWNER'S REPRESENTATIVES, AND PAY ALL FEES AS REQUIRED BY THE CONSTRUCTION COVERED IN THESE PLANS.
10. ALL WORK AND MATERIALS SHALL BE SUBJECT TO INSPECTION AND APPROVAL BY THE OWNER OR THE OWNER'S REPRESENTATIVE.
11. ALL WORK SHALL CONFORM TO ALL LOCAL, STATE, AND FEDERAL APPLICABLE LAWS AND REGULATIONS.
12. CONTRACTOR SHALL CONTACT THE OWNER IMMEDIATELY UPON DISCOVERY OF ANY ERRORS OR INCONSISTENCIES.
13. ALL ESTIMATES OF QUANTITIES ARE FOR INFORMATIONAL PURPOSES ONLY. CONTRACTOR AND SUBCONTRACTOR SHALL BE RESPONSIBLE FOR DETERMINING ALL QUANTITIES. CONTRACTOR SHALL PROVIDE ALL WORK AND MATERIALS AS SHOWN ON PLANS.
14. THE CONTRACTOR SHALL BE RESPONSIBLE FOR JOB SITE SAFETY OF HIS OWN PERSONNEL, ALL VISITORS TO THE SITE, AND THE GENERAL PUBLIC INCLUDING, BUT NOT LIMITED TO, TRENCH EXCAVATION AND SHORINGS, TRAFFIC CONTROL, AND SECURITY NOT LIMITED TO NORMAL WORKING HOURS.
15. THE CONTRACTOR SHALL BE RESPONSIBLE FOR REPAIRING ALL EXISTING AREAS, FENCES, WALLS, SHEDS, STRUCTURES OR OTHER IMPROVEMENTS DAMAGED DURING CONSTRUCTION ACTIVITIES TO EQUAL OR BETTER CONDITION AT HIS OWN EXPENSE.
16. LIMIT OF CONSTRUCTION WILL FOLLOW PROPERTY LINE UNLESS OTHERWISE NOTED.
17. PER FIRE DISTRICT REQUIREMENTS, NO CONSTRUCTION SHALL BEGIN UNTIL ALL FIRE HYDRANTS ARE INSTALLED AND ALL ACCESS ROADS ARE COMPLETE.
18. THE CONTRACTOR SHALL BE RESPONSIBLE FOR ARRANGING MEETINGS WITH THE CITY AND APPROPRIATE REVIEWING AGENCIES PRIOR TO THE START OF ANY CONSTRUCTION OR INSTALLATION OF UTILITIES.
19. THE CONTRACTOR SHALL PROPERLY BARRICADE THE CONSTRUCTION SITE UNTIL CONSTRUCTION IS COMPLETE.
20. PRIOR TO BEGINNING THE WORK, THE CONTRACTOR SHALL OBTAIN ANY WRITTEN AGREEMENTS FOR INGRESS AND EGRESS TO THE JOBSITE FROM ADJACENT PRIVATE PROPERTY OWNERS. ACCESS TO ANY ADJACENT PRIVATE PROPERTY SHALL BE MAINTAINED THROUGHOUT THE CONSTRUCTION PERIOD, DURING ALL HOURS OF OPERATION FOR THE BUSINESS LOCATED ON THOSE PARCELS.
21. EXCEPT FOR MATERIALS DESIGNED TO BE RELOCATED ON THIS PLAN, ALL OTHER CONSTRUCTION MATERIALS SHALL BE NEW.
22. NO WORK SHALL BE BACKFILLED (INCLUDING BEDDING MATERIAL ABOVE THE SPRING LINE OF THE PIPE) UNTIL THE CONSTRUCTION HAS BEEN INSPECTED AND APPROVED FOR BACKFILLING BY THE APPROPRIATE GOVERNING AGENCY.
23. SHOP DRAWINGS AND MATERIAL SPECIFICATIONS SHALL BE SUBMITTED AS REQUIRED, TO OWNER AND ENGINEER FOR REVIEW AND APPROVAL PRIOR TO PLACEMENT OF MATERIAL.
24. CONTRACTOR SHALL COORDINATE THE INSTALLATION OF ALL SITE IMPROVEMENTS (INCLUDING BUT NOT LIMITED TO: UTILITIES, STRUCTURES, PAVING, LANDSCAPING, ETC.) SUCH THAT NO DAMAGE IS DONE TO SITE IMPROVEMENTS (I.E.: SAWCUTTING NEW PAVEMENT). SITE IMPROVEMENTS DAMAGED DURING CONSTRUCTION SHALL BE REPAIRED OR REPLACED TO THE SATISFACTION OF THE OWNER AT NO ADDITIONAL COST TO THE OWNER.
25. DIMENSIONS SHOWN ON THE PLANS ARE TO FACE OF CURB LINE IN CURBED AREA AND EXTERIOR FACE OF BUILDING, AND TO CENTERLINE OF UTILITIES, UNLESS OTHERWISE SPECIFIED.
26. USE ONLY DIMENSIONS PROVIDED ON THESE PLANS. <u>DO NOT SCALE DRAWINGS</u>. INFORM ENGINEER OF ANY DISCREPANCIES AND/OR MISSING INFORMATION.
27. CONTRACTOR TO OBTAIN TEMPORARY POWER, TELEPHONE AND WATER FOR THE SITE.
28. CONTRACTOR TO REFER TO DRAWINGS ISSUED BY THE ARCHITECT, TO ENSURE COORDINATION OF EXACT LOCATION AND DIMENSIONS OF BUILDING EXITS, RAMPS, UTILITY ENTRANCE LOCATIONS AND GRADES AROUND THE BUILDING. IMMEDIATELY NOTIFY ENGINEER AND ARCHITECT OF ANY DISCREPANCIES.
29. CONTRACTOR MUST COORDINATE CONSTRUCTION WITH KUM & GO CONSTRUCTION PROJECT MANAGER.
30. CONTRACTOR TO MAINTAIN ACCESS TO ADJACENT BUSINESSES THROUGHOUT CONSTRUCTION, AND SHALL COORDINATE ACCESS DEMOLITION & CONSTRUCTION WITH ALL ADJACENT BUSINESSES.

GENERAL PAVING NOTES:

1. CONTRACTOR TO OBTAIN AND READ GEOTECHNICAL REPORT AND ALL ADDENDA, PREPARED BY OLSSON ASSOCIATES, NOVEMBER 15, 2012. PROJ. NO. 012-1417 PREPARED FOR THIS PROJECT. ALL PAVING WORK SHALL CONFORM TO THE RECOMMENDATIONS OF THIS REPORT. IN CASE OF ANY CONFLICT WITH THESE PLANS, NOTIFY ENGINEER.
2. ALL PAVEMENT MARKINGS FOR PARKING STALLS SHALL BE 4" WIDE YELLOW MARKINGS, CONFORMING TO AASHTO M248 READY MIXED YELLOW TRAFFIC PAINT.
3. UNLESS PROVIDED FOR IN THE PLANS, CONTRACTOR SHALL DEVELOP A CONCRETE PAVEMENT JOINTING PLAN USING THE PROPOSED PAVING PLAN AND SITE CONDITIONS. JOINT LAYOUT SHALL BE IN ACCORDANCE WITH ACI 330R "GUIDE FOR THE DESIGN AND CONSTRUCTION OF CONCRETE PARKING LOTS," AND STANDARD CONSTRUCTION PRACTICES. JOINT DETAILS SHALL BE IN ACCORDANCE WITH CITY OF BOULDER STANDARD DETAILS. CONTRACTOR SHALL PROVIDE A PAVEMENT JOINTING PLAN FOR OWNER APPROVAL.
4. ALL CONCRETE PAVEMENT AND CONSTRUCTION SHALL MEET KUM & GO STANDARD SPECIFICATIONS. CONCRETE PAVEMENT SHALL HAVE A MINIMUM 28-DAY COMPRESSIVE STRENGTH OF 4000 PSI, TYPE I/II PORTLAND CEMENT (UNLESS OTHERWISE SPECIFIED IN THE GEOTECHNICAL REPORT FOR HIGHER SULFATE RESISTANCE), A SLUMP OF 4 INCHES +/- 1 INCH, AND AN AIR CONTENT OF 6% +/- 1%. .

ADA NOTES:

1. THE CONTRACTOR IS RESPONSIBLE FOR ENSURING THAT ALL ACCESSIBLE AREAS ARE BUILT IN ACCORDANCE WITH THE PLANS AND THE 2010 ADA STANDARDS FOR ACCESSIBLE DESIGN. THE SITE MAY BE INSPECTED BY CITY PERSONNEL FOR COMPLIANCE WITH THE STANDARDS.
2. ALL ADA ACCESSIBLE PARKING STALLS SHALL MEET ADA REQUIREMENTS PER SECTION 502. ALL ADA ACCESSIBLE PARKING SHALL BE CONSTRUCTED WITH A MAXIMUM SLOPE OF 2.00% IN ANY DIRECTION.
3. ALL ADA ACCESSIBLE ROUTES SHALL MEET ADA REQUIREMENTS PER CHAPTER 4. ALL ADA ACCESSIBLE ROUTES SHALL BE CONSTRUCTED WITH A MAXIMUM CROSS SLOPE OF 2.00% AND A MAXIMUM LONGITUDINAL SLOPE OF 5.00%
4. ALL ADA MANEUVERING AREAS AT DOORS SHALL MEET ADA REQUIREMENTS PER SECTION 404. ALL ADA MANEUVERING AREAS SHALL BE CONSTRUCTED WITH A MAXIMUM SLOPE OF 2.00% IN ANY DIRECTION.
5. ALL ADA ACCESSIBLE RAMPS SHALL MEET THE ADA REQUIREMENTS PER SECTION 405 AND 406.

GENERAL DEMOLITION NOTES

1. PRIOR TO DEMOLITION WORK, EROSION CONTROL DEVICES ARE TO BE INSTALLED. EROSION CONTROL MEASURES MAY BE ADJUSTED AS DEMOLITION AND CONSTRUCTION PROCEEDS.
2. THE CONTRACTOR IS RESPONSIBLE FOR DEMOLITION, REMOVAL, AND DISPOSING IN A MANNER APPROVED BY ALL GOVERNING AUTHORITIES FOR ALL STRUCTURES, PADS, WALLS, PANS, FOUNDATIONS, PAVEMENT, UTILITIES, ETC. TO BE DEMOLISHED, SUCH THAT THE IMPROVEMENTS SHOWN ON THE REMAINING PLANS CAN BE CONSTRUCTED. ALL FACILITIES TO BE REMOVED SHALL BE UNDERCUT TO SUITABLE GRADE AND BROUGHT UP TO PROPOSED GRADE WITH SUITABLE COMPACTED FILL MATERIAL PER THE GEOTECHNICAL STUDY.
3. THE CONTRACTOR IS RESPONSIBLE FOR REMOVING ALL DEBRIS FROM THE SITE AND DISPOSING THE DEBRIS IN A LAWFUL MANNER. THE CONTRACTOR IS RESPONSIBLE FOR OBTAINING ALL PERMITS REQUIRED FOR DEMOLITION AND DISPOSAL.
4. THE EXISTENCE AND LOCATION OF UNDERGROUND UTILITY PIPES SHOWN ON THESE PLANS WERE OBTAINED BY A SEARCH OF AVAILABLE RECORDS, AND TO THE BEST OF OUR KNOWLEDGE, CONSTITUTES ALL KNOWN FACILITIES. HOWEVER, THE CONTRACTOR IS REQUIRED TO TAKE DUE PRECAUTIONARY MEASURES TO PROTECT ANY EXISTING UTILITIES OR STRUCTURES LOCATED AT THE WORK SITE. IT IS THE CONTRACTOR'S RESPONSIBILITY TO CONTACT ONE-CALL OF COLORADO AT 811 IN ADVANCE OF ANY EXCAVATION FOR THE MARK-OUT OF EXISTING UTILITIES AND NOTIFICATION OF COMMENCEMENT OF WORK.
5. BEFORE EXCAVATING FOR THIS CONTRACT, THE CONTRACTOR SHALL FIELD VERIFY LOCATION OF UNDERGROUND UTILITIES. CONTRACTOR SHALL MAKE EXPLORATION EXCAVATIONS AND LOCATE EXISTING UNDERGROUND UTILITIES SUFFICIENTLY AHEAD OF CONSTRUCTION TO PERMIT REVISIONS TO PLANS IF REVISIONS ARE NECESSARY BECAUSE OF ACTUAL LOCATION OF EXISTING FACILITIES. CONTRACTOR IS REQUIRED TO TAKE PRECAUTIONARY MEASURES TO PROTECT THE UTILITY LINES SHOWN AND ANY OTHER EXISTING LINES NOT OF RECORD OR NOT SHOWN ON THESE PLANS.
6. THE CONTRACTOR SHALL COORDINATE WITH RESPECTIVE UTILITY COMPANIES PRIOR TO THE REMOVAL AND/OR RELOCATION OF UTILITIES. THE CONTRACTOR SHALL COORDINATE WITH THE UTILITY COMPANY CONCERNING PORTIONS OF WORK WHICH MAY BE PERFORMED BY THE UTILITY COMPANY'S FORCES AND ANY FEES WHICH ARE TO BE PAID TO THE UTILITY COMPANY FOR THEIR SERVICES. THE CONTRACTOR IS RESPONSIBLE FOR PAYING ALL FEES AND CHARGES.
7. ELECTRICAL, TELEPHONE, CABLE, WATER, FIBER OPTIC CABLE AND/OR GAS LINES NEEDING TO BE REMOVED OR RELOCATED SHALL BE COORDINATED WITH THE AFFECTED UTILITY COMPANY. ADEQUATE TIME SHALL BE PROVIDED FOR RELOCATION AND CLOSE COORDINATION WITH THE UTILITY COMPANY IS NECESSARY TO PROVIDE A SMOOTH TRANSITION IN UTILITY SERVICE.
8. CONTRACTOR MUST PROTECT THE PUBLIC AT ALL TIMES USING MEANS OF THEIR CHOICE.
9. THE CONTRACTOR SHALL COORDINATE WATER MAIN WORK WITH THE FIRE DEPARTMENT TO PLAN PROPOSED IMPROVEMENTS AND TO ENSURE ADEQUATE FIRE PROTECTION IS CONSTANTLY AVAILABLE TO THE SITE THROUGHOUT THIS SPECIFIC WORK AND THROUGH ALL PHASES OF CONSTRUCTION. CONTRACTOR WILL BE RESPONSIBLE FOR ARRANGING/PROVIDING ANY REQUIRED WATER MAIN SHUT OFFS WITH THE CITY DURING CONSTRUCTION. ANY COSTS ASSOCIATED WITH WATER MAIN SHUT OFFS WILL BE THE RESPONSIBILITY OF THE CONTRACTOR AND NO EXTRA COMPENSATION WILL BE PROVIDED.
10. THE CONTRACTOR IS RESPONSIBLE FOR REMOVING EXISTING IRRIGATION SYSTEM IN THE AREAS OF PROPOSED IMPROVEMENTS. THE CONTRACTOR SHALL CAP THE EXISTING IRRIGATION SYSTEM TO REMAIN SUCH THAT THE REMAINING SYSTEM SHALL CONTINUE TO FUNCTION PROPERLY. IN CASES WHERE ISLAND, ROADWAYS, PARKING LOTS, AND OTHER IMPROVEMENTS NOT MENTIONED ARE MOVED OR ADJUSTED TO GRADE, CONTRACTOR SHALL BE RESPONSIBLE FOR ENSURING THAT ALL LANDSCAPED AREAS ARE PROPERLY IRRIGATED & THAT IRRIGATION SYSTEM FUNCTIONS PROPERLY.
11. CONTRACTOR SHALL PRESERVE ALL LANDSCAPING NOT TO BE REMOVED FOR CONSTRUCTION. CONTRACTOR SHALL BE RESPONSIBLE FOR RESTORING ALL AREAS DISTURBED BY CONSTRUCTION.

GENERAL GRADING NOTES:

1. THE CONTRACTOR SHALL BE RESPONSIBLE FOR KEEPING THE PUBLIC STREETS AND ACCESS ROUTES IN THE VICINITY OF THE JOB SITE CLEAN AND FREE OF ROCKS, SOIL AND DEBRIS.
2. THE CONTRACTOR IS RESPONSIBLE FOR PROTECTION OF ALL PROPERTY CORNERS. ANY PROPERTY CORNERS DISTURBED OR DAMAGED BY GRADING ACTIVITIES SHALL BE RESET BY A PROFESSIONAL LAND SURVEYOR LICENSED IN THE STATE OF COLORADO, AT THE CONTRACTOR'S EXPENSE.
3. THE CONTOUR LINES, SPOT ELEVATIONS AND BUILDING FLOOR ELEVATIONS SHOWN ARE TO FINISH GRADE FOR SURFACE OF PAVEMENT, TOP OF SIDEWALKS AND CURBS, TOP OF FLOOR SLABS, ETC. REFER TO TYPICAL SECTIONS FOR MULCH, SOD, PAVING, SLAB AND AGGREGATE BASE THICKNESS TO DEDUCT FOR GRADING LINE ELEVATIONS.
4. ALL TOP OF CURB AND SIDEWALK ELEVATIONS SHALL BE 0.5' ABOVE GUTTER ELEVATIONS UNLESS OTHERWISE NOTED. IN AREAS WITH SIDEWALK ABUTTING BACK OF CURB, TOP OF CURB ELEVATIONS SHALL BE EQUAL TO SIDEWALK ELEVATIONS.
5. THE CONTRACTOR SHALL FINISH GRADE SLOPES AS SHOWN NO STEEPER THAN ONE FOOT VERTICAL IN THREE FEET HORIZONTAL.
6. CONTRACTOR SHALL GRADE LANDSCAPED AREAS TO PROVIDE POSITIVE DRAINAGE AWAY FROM BUILDINGS AND SIDEWALKS WHEN FINISH LANDSCAPE MATERIALS ARE IN PLACE. SLOPE SHALL BE A 2% MINIMUM.
7. SITE AND BUILDING PREPARATION, GRADING, EXCAVATION, AND UTILITY TRENCHING PROCEDURES SHALL CONFORM TO THE RECOMMENDATIONS OUTLINED IN THE GEOTECHNICAL REPORT AND ALL ADDENDA PREPARED BY OLSSON ASSOCIATES, NOVEMBER 15, 2012. PROJ. NO. 012-1417.
8. THE CONTRACTOR SHALL CLEAN OUT ALL EXISTING AND PROPOSED INLETS, PIPES AND MANHOLES OF DEBRIS AND SEDIMENTATION AT COMPLETION OF SITEWORK. THIS WORK SHALL BE DONE TO THE SATISFACTION OF THE OWNER. ANY CONSTRUCTION DEBRIS OR MUD DROPPED INTO MANHOLES, INLETS, PIPES OR TRACKED ONTO EXISTING ROADWAYS SHALL BE REMOVED IMMEDIATELY BY THE CONTRACTOR. THE CONTRACTOR SHALL REPAIR ANY EXCAVATIONS OR PAVEMENT FAILURES CAUSED BY HIS CONSTRUCTION.
9. IN CASE OF ANY DISCREPANCIES REGARDING EARTHWORK BETWEEN THE GEOTECHNICAL REPORT AND THE SPECIFICATIONS IN THIS PLAN SET, NOTIFY ENGINEER.
10. ALL HERBACEOUS VEGETATION AND TOPSOIL SHALL BE STRIPPED TO A MINIMUM DEPTH OF 6 INCHES AND REMOVED FROM SITE OR STOCKPILED FOR LATER USE IN LANDSCAPED AREAS.
11. ALL EXISTING PAVEMENT, UTILITIES, BURIED DEBRIS, RUBBLE, AND/OR STRUCTURES/FOUNDATIONS ENCOUNTERED WITHIN AREAS OF DISTURBANCE SHALL BE COMPLETELY REMOVED PRIOR TO OR DURING EARTHWORK OPERATIONS.
12. THE UPPER 24" OF ALL UTILITY TRENCHES SHALL BE BACKFILLED WITH COMPACTED COHESIVE SOILS IN UNPAVED AREAS. SEE GEOTECHNICAL REPORT FOR COMPACTION AND MOISTURE RECOMMENDATIONS.
13. IF REQUIRED, THE CONTRACTOR SHALL OBTAIN ALL LOCAL AND STATE PERMITS AND AUTHORIZATION TO DISCHARGE DEWATERING ACTIVITIES.

GENERAL STORM SEWER NOTES:

1. FOR DETAILS OF STORM SEWER CONSTRUCTION, SEE THE CITY OF Boulder CONSTRUCTION SPECIFICATIONS AND STANDARD DRAWINGS. ALL STANDARD SPECIFICATIONS AND ADDENDA SHALL APPLY.
2. ALL STATIONING AND DIMENSIONS ARE TO BE CENTERLINE OF VAULT UNLESS OTHERWISE NOTED.
3. ALL STORM SEWER CONNECTIONS SHALL BE SOIL-TIGHT (MINIMUM).
4. ALL PIPE SHALL HAVE SMOOTH INTERIOR WALL WITH A MANNING'S ROUGHNESS VALUE OF 0.013 OR LESS.
5. HDPE PIPE (IF USED) SHALL MEET OR EXCEED THE REQUIREMENTS FOR ADS N-12 SMOOTH INTERIOR WALL PIPE.
6. ALL PIPE SHALL BE INSTALLED WITH GRANULAR BEDDING IN ACCORDANCE WITH BEDDING DETAIL INCLUDED IN PLANS AND THE MANUFACTURER'S INSTALLATION REQUIREMENTS. IN CASE OF CONFLICT THE MORE STRINGENT REQUIREMENTS SHALL GOVERN.
7. ALL FLEXIBLE STORM SEWER PIPE APPROVED FOR USE ON THIS PROJECT MUST BE INSTALLED IN ACCORDANCE WITH PROJECT REQUIREMENTS, AND MANUFACTURER SPECIFICATIONS (MORE STRINGENT REQUIREMENT SHALL GOVERN).
8. NYLOPLAST STRUCTURES (IF USED) SHALL BE INSTALLED WITHIN GRANULAR BEDDING (CLASS 1 OR 2 AS SPECIFIED IN ASTM D2321). BACKFILL AND SUPPORT IN ACCORDANCE WITH MANUFACTURER INSTALLATION AND SPECIFICATION REQUIREMENTS.
9. ALL CAST IN PLACE PORTLAND CEMENT CONCRETE FOR DRAINAGE STRUCTURES SHALL HAVE A MINIMUM 28 DAY COMPRESSIVE STRENGTH OF 4,000 PSI, SHALL HAVE TYPE II CEMENT (UNLESS OTHERWISE SPECIFIED) WITH AIR ENTRAINING ADMIXTURES AND SHALL CONFORM TO ALL THE REQUIREMENTS OF CITY'S SPECIFICATIONS MANUAL.
10. MATERIALS, WORKMANSHIP, AND INSTALLATION SHALL MEET OR EXCEED THE SPECIFICATIONS AND INSTALLATION REQUIREMENTS OF THE MANUFACTURER.
11. SMALL DIAMETER STORM SEWER CONNECTIONS (12 INCH DIAMETER AND LESS) SHALL BE MADE WITH REDUCING WYE'S, 45 DEGREE BENDS, AND REDUCING COUPLERS, UNLESS OTHERWISE INDICATED. REFER TO PLAN AND DETAILS FOR SYSTEM LAYOUT.

GENERAL UTILITY NOTES:

1. CONTRACTOR TO FIELD VERIFY LOCATION AND SIZE OF ALL EXISTING UTILITIES BEFORE BEGINNING WORK.
2. THE CONTRACTOR SHALL COORDINATE EXACT LOCATIONS AND SIZES OF ALL UTILITY SERVICE LINE HOOKUPS TO THE BUILDINGS WITH THE MECHANICAL, ELECTRICAL AND PLUMBING PLANS AND SPECIFICATIONS, AND REPORT ANY DISCREPANCIES TO THE ENGINEER PRIOR TO BEGINNING UTILITIES CONSTRUCTION.
3. THE CONTRACTOR SHALL CONSTRUCT THE SANITARY SEWER SERVICE CONNECTIONS IN ACCORDANCE WITH THE APPLICABLE STANDARDS AND SPECIFICATIONS OF Boulder UTILITIES.
4. THE CONTRACTOR SHALL CONSTRUCT ALL WATER SERVICE CONNECTIONS IN ACCORDANCE WITH Boulder UTILITIES CONSTRUCTION SPECIFICATIONS AND STANDARD DRAWINGS.
5. THE CONTRACTOR SHALL CONSTRUCT ALL ELECTRIC, GAS, TELEPHONE, AND CABLE TELEVISION SERVICE IN ACCORDANCE WITH THE APPLICABLE STANDARDS AND SPECIFICATIONS OF THE UTILITY PROVIDER.
6. THE CONTRACTOR IS RESPONSIBLE FOR COORDINATING UTILITY SERVICE CONNECTIONS WITH THE APPROPRIATE UTILITY COMPANY/OWNER, AND TO OBTAIN ALL PERMITS AND PAY ALL FEES AS REQUIRED FOR SERVICE CONNECTIONS TO UTILITY MAINS.
7. TRENCH RESPONSIBILITY INCLUDES EXCAVATION, BACKFILL, COMPACTION, TRENCH SAFETY AND MAINTENANCE OF THE TRENCH.
8. UNLESS OTHERWISE NOTED, INSTALLATION OF A UTILITY SERVICE INCLUDES TRENCHING FOR THAT PARTICULAR SERVICE.
9. CONTRACTOR IS RESPONSIBLE FOR INSTALLING APPROPRIATE CONSTRUCTION SAFETY SIGNAGE WHILE WORKING IN PUBLIC RIGHT OF WAY AND EASEMENTS.
10. ALL EXISTING SEWERS, PIPING AND UTILITIES SHOWN ARE NOT TO BE INTERPRETED AS THE EXACT LOCATION, OR AS THE ONLY OBSTACLES THAT MAY OCCUR ON THE SITE. VERIFY EXISTING CONDITIONS AND PROCEED WITH CAUTION AROUND ANY ANTICIPATED FEATURES. GIVE NOTICE TO ALL UTILITY COMPANIES REGARDING DESTRUCTION AND REMOVAL OF ALL SERVICE LINES AND CAP ALL LINES BEFORE PROCEEDING WITH THE WORK. UTILITIES DETERMINED TO BE ABANDONED AND LEFT IN PLACE SHALL BE GROUTED IF UNDER BUILDING.
11. UTILITY TRENCHES ARE TO BE SLOPED OR BRACED AND SHEETED AS NECESSARY FOR THE SAFETY OF THE WORKMEN AND THE PROTECTION OF OTHER UTILITIES IN COMPLIANCE WITH ALL APPLICABLE LOCAL, STATE AND FEDERAL REQUIREMENTS.
12. CONTRACTOR TO SET AND ADJUST ALL PROPOSED STRUCTURES, UTILITY VALVES, METER PITS, ETC. TO FINISH GRADE. ALL EXISTING STRUCTURES, UTILITY VALVES, METER PITS, ETC. AFFECTED BY THE WORK SHALL BE ADJUSTED AS REQUIRED TO MATCH FINISH GRADE.

Know what's **below.**
Call before you dig.

CALL **811** SEVENTY-TWO HOURS PRIOR TO DIGGING, GRADING OR EXCAVATING FOR THE MARKING OF UNDERGROUND MEMBER UTILITIES

CITY APPROVAL STAMP:

OLSSON ASSOCIATES
4690 Table Mountain Drive
Suite 200
Golden, CO 80403
TEL 303.237.2072
FAX 303.237.2659
OA # 012-1417
www.olssonassociates.com

COLORADO LICENSED PROFESSIONAL ENGINEER JOSH ERRAMOUSPE 42141 06/20/14

6400 Westown Parkway
West Des Moines, Iowa
50266
P: 515-226-0128
F: 515-223-9873

#943 - BOULDER, COLORADO
3365 DIAGONAL HWY.

GENERAL NOTES

KG PROJECT TEAM:
RDR: JXH
SDM: RJH
CPM: TLK

△	DATE	REVISION DESCRIPTION

REVISIONS

DATE: 06-20-2014

SHEET NUMBER:
C1.1

DOCUMENT REVISION DATE: AUGUST 2012
DWG: F:\Projects\012-1417_LDVP\Final_Plans\121417_NTS.dwg USER: sbower
DATE: Jul 01, 2014 2:40pm XREFS: 121417_TBLK_CD

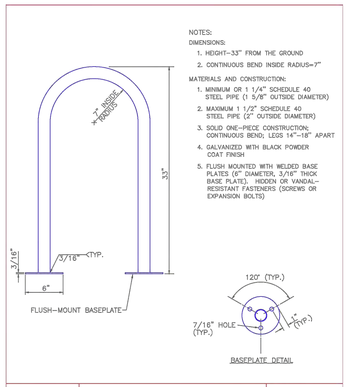

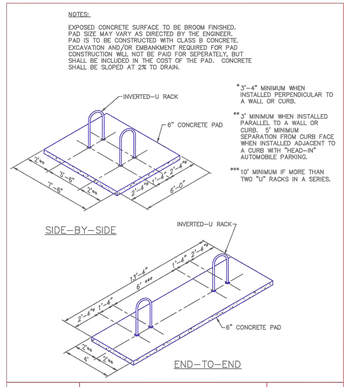

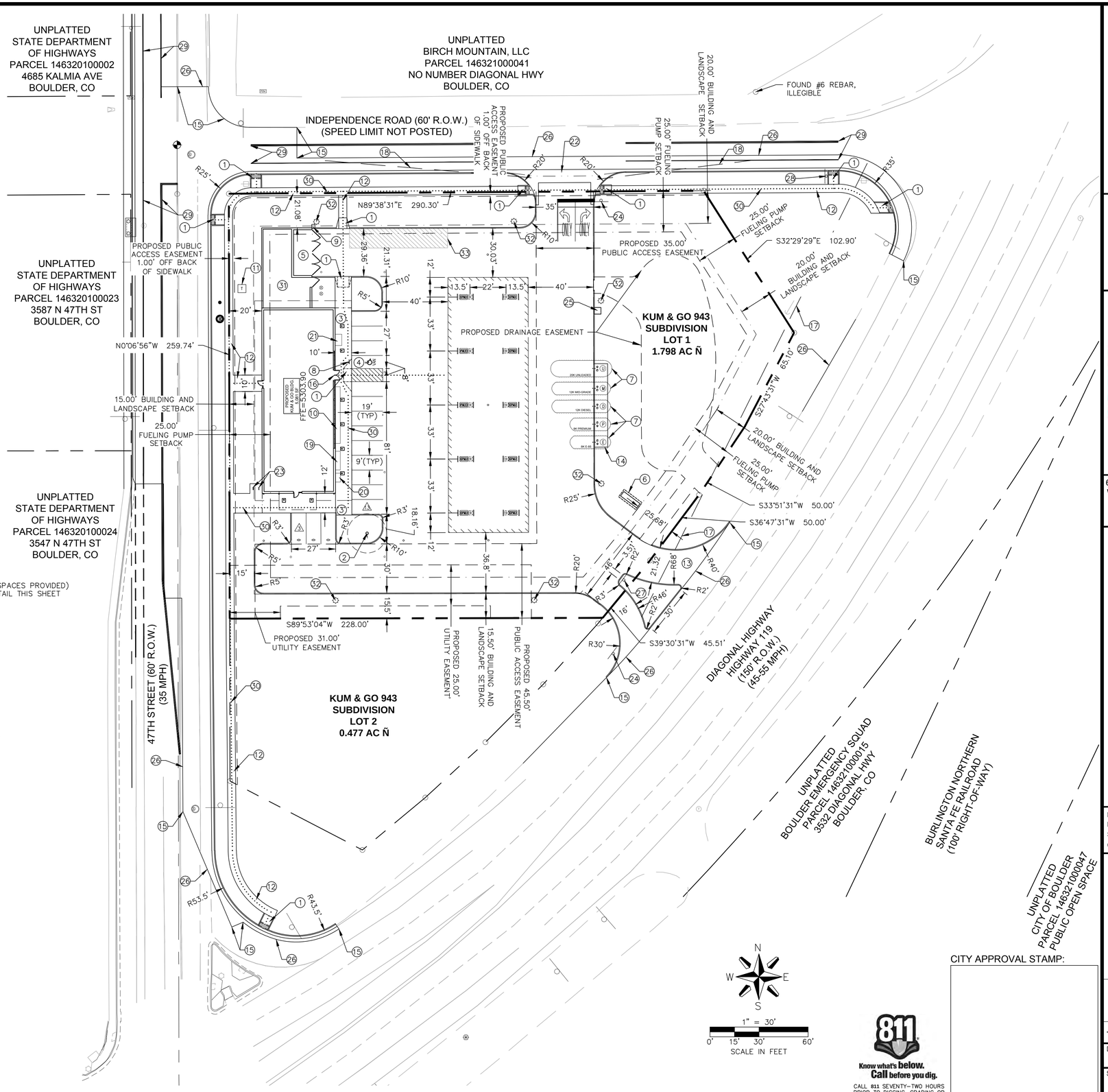

BENCHMARKS:

1. PROJECT BENCHMARK: THE PUBLISHED VALUES OF BOULDER COUNTY PRIMARY MONUMENT CONTROL STATION "B 322 RESET". EL=5508.90' (NAVD88), N:1272428.69, E:3061900.56
2. SITE BENCHMARK: 3" ALUMINUM CAP LOCATED IN THE INTERSECTION OF 47TH STREET AND INDEPENDENCE ROAD. EL=5304.38' (NAVD88), N:1257929.36, E:3072507.66

BASIS OF BEARINGS:

BEARINGS ARE BASED ON THE WEST LINE OF THE NW1/4 OF SECTION 21 AS HAVING A BEARING OF N00°06'56"W FROM THE W1/4 CORNER BEING MONUMENTED WITH A 3" ALUMINUM CAP TO THE W–N1/16 CORNER BEING ALSO MONUMENTED WITH A 3" ALUMINUM CAP AS SHOWN HEREON.

FLAG NOTES:

1. PROPOSED ADA CURB RAMP, SEE SHEET C4.2
2. PROPOSED 20' FLAGPOLE, SEE SHEET C5.1
3. PROPOSED 6" CONCRETE BUILDING SIDEWALK, 1% MAX. CROSS SLOPE; SEE STRUCTURAL PLANS
4. PROPOSED ACCESSIBLE PARKING SPACE, SEE SHEET C5.1
5. PROPOSED 12' X 30' TRASH ENCLOSURE, SEE ARCHITECTURAL PLANS
6. PROPOSED MONUMENT SIGN
7. PROPOSED UNDERGROUND FUEL STORAGE TANKS
8. PROPOSED POLE MOUNTED ADA PARKING SIGN, SEE SHEET C5.1
9. PROPOSED DESIGNATED SMOKING AREA WITH 2'X2' PAD
10. PROPOSED MISCELLANEOUS MERCHANDISE
11. PROPOSED TRANSFORMER LOCATION, COORDINATE WITH UTILITY PROVIDER, SEE SHEET C3.1
12. PROPOSED SITE SIDEWALK, SEE SHEET C5.1
13. PROPOSED RIGHT–IN RIGHT–OUT ACCESS
14. PROPOSED CONCRETE PAD, SEE SHEET C5.1
15. TIE INTO EXISTING ASPHALT
16. FRONT ENTRY, SEE ARCHITECTURAL PLANS
17. CDOT SIGHT TRIANGLE
18. CITY OF BOULDER SIGHT TRIANGLE
19. PROPOSED REDBOX
20. PROPOSED ICE MERCHANDISE
21. PROPOSED PROPANE CAGE
22. PROPOSED FULL MOVEMENT ACCESS
23. PROPOSED INVERTED "U" BIKE RACK SIDE–BY–SIDE (FOUR SPACES PROVIDED) SHALL BE MADRAX U190–SF OR APPROVED EQUAL, SEE DETAIL THIS SHEET
24. PROPOSED "STOP" SIGN, SEE SHEET C5.1
25. PROPOSED AIR MACHINE ON 4'X4' PAD, SEE SHEET C5.2
26. SAWCUT EXISTING ASPHALT
27. PROPOSED "NO LEFT TURN" SIGN, SEE SHEET C5.1
28. RELOCATED "STOP" SIGN
29. PROPOSED PAVEMENT MARKING, SEE SHEET C4.1 & C4.6
30. PROPOSED ADA ROUTE, SEE SHEET C4.4
31. PROPOSED CONDENSER UNIT ENCLOSURE
32. PROPOSED LIGHT POLE (ALL BASES SHALL BE PLACED 4' FROM BACK OF CURB TO CENTER OF BASE, UNLESS NOTED OTHERWISE) SEE MEP PLANS FOR SITE LIGHTING ELECTRICAL
33. PROPOSED 12' X 60' LOADING ZONE

LEGEND

- BOUNDARY LINE
- KUM & GO BOUNDARY LINE
- SECTION LINE
- PROPOSED EASEMENT LINE
- PROPOSED SETBACK LINE
- ADA ACCESSIBLE ROUTE
- EXISTING EDGE OF ASPHALT
- PROPOSED CONCRETE CURB
- PROPOSED CONCRETE CURB AND GUTTER
- FOUND YELLOW PLASTIC CAP, MKD "LS 27601" 0.2'W & 0.4'S
- PIN AND CAP PLS 38012
- SECTION CORNER
- LIGHT POLE
- TRANSFORMER
- ELECTRIC VAULT
- SIGN
- BOLLARD
- BENCHMARK/CONTROL POINT
- POWER POLE
- GUY WIRE
- TELEPHONE PEDESTAL
- TELEPHONE RISER
- TELEPHONE MANHOLE
- TRAFFIC SIGNAL BOX
- TRAFFIC SIGNAL POLE
- STORM SEWER MANHOLE
- EXISTING CURB INLET
- FIRE HYDRANT
- WATER VALVE
- WATER METER
- EXISTING DECIDUOUS TREE
- CLEANOUT
- GREASE INTERCEPTOR LID
- STALL QUANTITY
- SANITARY SEWER MANHOLE

Know what's below. Call before you dig.

CALL 811 SEVENTY–TWO HOURS PRIOR TO DIGGING, GRADING OR EXCAVATING FOR THE MARKING OF UNDERGROUND MEMBER UTILITIES

CITY APPROVAL STAMP:

OLSSON ASSOCIATES
4690 Table Mountain Drive
Suite 200
Golden, CO 80403
TEL 303.237.2072
FAX 303.237.2659
OA # 012-1417
www.olssonassociates.com

COLORADO LICENSED PROFESSIONAL ENGINEER 06/20/14 42161

Kum & Go

6400 Westown Parkway
West Des Moines, Iowa
50266
P: 515-226-0128
F: 515-223-9873

#943 - BOULDER, COLORADO
3365 DIAGONAL HWY.

SITE PLAN

KG PROJECT TEAM:
RDR: JXH
SDM: RJH
CPM: TLK

	DATE	REVISION DESCRIPTION
△		

REVISIONS

DATE: 06-20-2014

SHEET NUMBER:
C1.2
03 OF 32

DWG: F:\Projects\012-1417_LDVP\Final_Plans\121417_SIT.dwg USER: sbower
DATE: Jul 01, 2014 2:40pm XREFS: 121417_XBASE 121417_PBASE 121417_TBLK_CD
DOCUMENT REVISION DATE AUGUST 2012

NOTE:

OLSSON ASSOCIATES AND THE SURVEYOR OF RECORD MAKE NO GUARANTEES THAT THE UNDERGROUND UTILITIES SHOWN HEREON COMPRISE ALL SUCH UTILITIES IN THE AREA, EITHER IN SERVICE OR ABANDONED. OLSSON ASSOCIATES AND THE SURVEYOR OF RECORD FURTHER DOES NOT WARRANT THAT THE UNDERGROUND UTILITIES SHOWN ARE IN THE EXACT LOCATION INDICATED. OLSSON ASSOCIATES AND THE SURVEYOR OF RECORD HAVE NOT PHYSICALLY LOCATED THE UNDERGROUND UTILITIES. IF ANY UNDERGROUND UTILITY LOCATIONS ARE REQUIRED, THEY WILL HAVE TO BE VERIFIED BY FIELD POTHOLING THE UTILITIES. OLSSON ASSOCIATES AND THE SURVEYOR OF RECORD SHALL NOT BE LIABLE FOR THE LOCATION OF OR THE FAILURE TO NOTE THE LOCATION OF NON-VISIBLE UTILITIES. UTILITIES SHOWN ARE BY OBSERVABLE EVIDENCE AND MARKED UTILITIES PER THE UNCC LOCATE REQUEST TICKET NUMBER B219500100-00B. THE COMPANIES LISTED ON THE TICKET ARE: CITY OF BOULDER, CITY OF BOULDER – FIBER, BOULDER VALLEY SCHOOL DISTRICT, COMCAST, LEVEL 3 COMMUNICATIONS, MCI, PAETEC, XCEL ENERGY, XCEL ENERGY – NORTH DENVER, QWEST LOCAL NETWORK AND TIER 2 MEMBER LEFT HAND WATER DISTRICT.

BENCHMARKS:

1. PROJECT BENCHMARK: THE PUBLISHED VALUES OF BOULDER COUNTY PRIMARY MONUMENT CONTROL STATION "B 322 RESET". EL=5508.90' (NAVD88), N:1272428.69, E:3061900.56
2. SITE BENCHMARK: 3" ALUMINUM CAP LOCATED IN THE INTERSECTION OF 47TH STREET AND INDEPENDENCE ROAD. EL=5304.38' (NAVD88), N:1257929.36, E:3072507.66

BASIS OF BEARING:

BASIS OF BEARINGS: BEARINGS ARE BASED ON THE WEST LINE OF THE NW1/4 OF SECTION 21 AS HAVING A BEARING OF N00°06'56"W FROM THE W1/4 CORNER BEING MONUMENTED WITH A 3" ALUMINUM CAP TO THE W-N1/16 CORNER BEING ALSO MONUMENTED WITH A 3" ALUMINUM CAP AS SHOWN HEREON.

FLOOD ZONE:

THE SUBJECT PROPERTY FALLS WITHIN ZONE "X" DESCRIBED AS AREAS DETERMINED TO BE OUTSIDE THE 500-YEAR FLOODPLAIN; ACCORDING TO FEMA FLOOD INSURANCE RATE MAP 08013C0411J WITH AN EFFECTIVE DATE OF MAY 6, 1996.

LEGAL DESCRIPTION:

LOT 1, KUM & GO 943 SUBDIVISION, A TRACT OF LAND IN THE SOUTHWEST QUARTER OF THE NORTHWEST QUARTER OF SECTION 21, TOWNSHIP 1 NORTH, RANGE 70 WEST OF THE 6TH PRINCIPAL MERIDIAN.

LEGEND

5300	EXISTING CONTOUR
	SECTION LINE
	CURB & GUTTER
	EDGE OF ASPHALT
	PROPERTY BOUNDARY
	PROPERTY LINE
FO	UNDERGROUND FIBER OPTIC LINES
OP OP	OVERHEAD POWER
SD	STORM SEWER PIPE
W	WATER LINES
GAS	GAS LINES
X X X	BARBWIRE FENCE
	WOOD FENCE
	CHAINLINK FENCE
	BOLLARD
DESCRIPTION	CONTROL POINT
E	ELECTRIC BOX
EMH	ELECTRIC MANHOLE
ER	ELECTRIC RISER
EV	ELECTRIC VAULT
FV	FIBER OPTIC VAULT
	FIRE HYDRANT
GV	GAS VALVE
LTP	LIGHT POLE
	PROPERTY MONUMENT, FOUND
	PROPERTY MONUMENT, SET
SSMH	SANITARY SEWER MANHOLE
	SIGN, AS DESCRIBED
	STEEL POST
SDMH	STORM SEWER MANHOLE
TC	TELEPHONE CABINET
TP	TELEPHONE PEDESTAL
TLP	TRAFFIC LIGHT POLE
TS	TRAFFIC SIGNAL BOX
	TRANSFORMER
WV	WATER VALVE
	TREE, DECIDUOUS
	EXISTING GRAVEL
	EXISTING ASPHALT

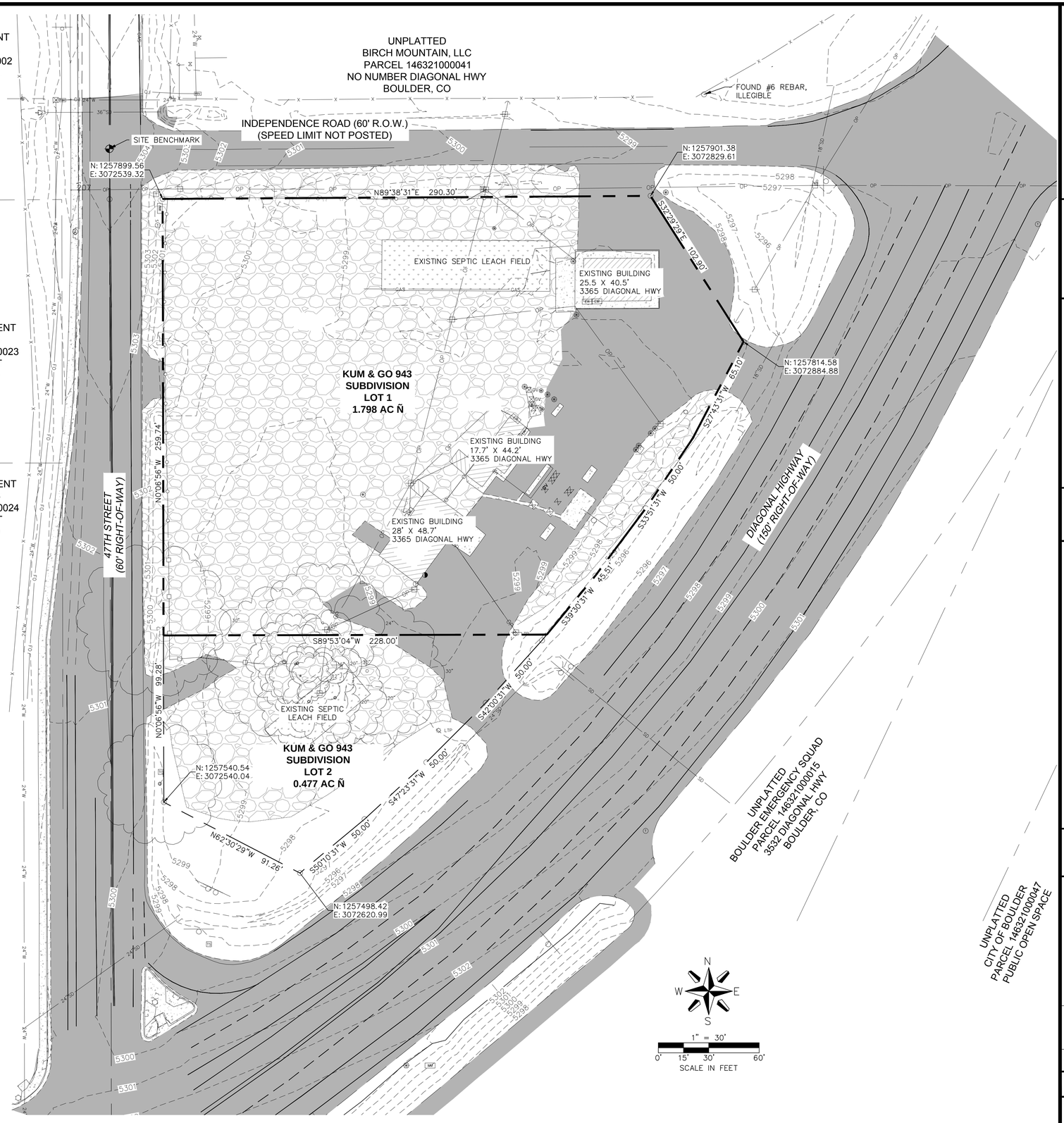

OLSSON ASSOCIATES
4690 Table Mountain Drive
Suite 200
Golden, CO 80403
TEL 303.237.2072
FAX 303.237.2659
OA # 012-1417
www.olssonassociates.com

Kum & Go
6400 Westown Parkway
West Des Moines, Iowa
50266
P: 515-226-0128
F: 515-223-9873

#943 - BOULDER, COLORADO
3365 DIAGONAL HWY.

EXISTING CONDITIONS PLAN

KG PROJECT TEAM:
RDR: JXH
SDM: RJH
CPM: TLK

	DATE	REVISION DESCRIPTION

REVISIONS

DATE: 06-20-2014

SHEET NUMBER:
C1.3
04 OF 32

DWG: F:\Projects\012-1417_LDVP\Final_Plans\121417_EXC.dwg USER: sbower
DATE: Jul 01, 2014 2:40pm XREFS: 121417_XBASE 121417_PBASE 121417_TBLK_CD

NOTE:

OLSSON ASSOCIATES AND THE SURVEYOR OF RECORD MAKE NO GUARANTEES THAT THE UNDERGROUND UTILITIES SHOWN HEREON COMPRISE ALL SUCH UTILITIES IN THE AREA, EITHER IN SERVICE OR ABANDONED. OLSSON ASSOCIATES AND THE SURVEYOR OF RECORD FURTHER DOES NOT WARRANT THAT THE UNDERGROUND UTILITIES SHOWN ARE IN THE EXACT LOCATION INDICATED. OLSSON ASSOCIATES AND THE SURVEYOR OF RECORD HAVE NOT PHYSICALLY LOCATED THE UNDERGROUND UTILITIES. IF ANY UNDERGROUND UTILITY LOCATIONS ARE REQUIRED, THEY WILL HAVE TO BE VERIFIED BY FIELD POTHOLING THE UTILITIES. OLSSON ASSOCIATES AND THE SURVEYOR OF RECORD SHALL NOT BE LIABLE FOR THE LOCATION OF OR THE FAILURE TO NOTE THE LOCATION OF NON-VISIBLE UTILITIES. UTILITIES SHOWN ARE BY OBSERVABLE EVIDENCE AND MARKED UTILITIES PER THE PRIVATE UTILITY LOCATE PERFORMED BY UTILITY LOCATING AND MAPPING CONSULTANTS ON 02-20-2013.

1. REMOVAL OF ENTIRE EXISTING BUILDING/CANOPY STRUCTURE, ROOF, FLOORS, WALLS, STAIRS, FOOTINGS, BOLLARDS, AND STRUCTURAL COLUMNS IN THEIR ENTIRETY. REMOVE ALL PAVEMENT, SIDEWALKS, TREES, WATER SERVICE LINES, CURB STOPS, SANITARY SEWER SERVICE LINES, CLEANOUTS, AND MAILBOXES. REMOVE ALL APPURTENANCES AND UTILITIES FOUND WITHIN THE EXISTING AND PROPOSED BUILDING AREAS. UTILITIES SHALL BE REMOVED PER RESPECTIVE UTILITY COMPANY'S REQUIREMENTS. REMOVE ALL BUILDING CONTENTS, DEBRIS, ETC. WITHIN BUILDING. CONTRACTOR TO COORDINATE UTILITY REMOVALS WITH RESPECTIVE UTILITY COMPANIES TO ENSURE CORRECT REMOVAL AND SHUTOFF. ALL MATERIAL SHALL BE REMOVED FROM SITE AND LEGALLY DISPOSED PER LOCAL CODES AND REGULATIONS.
2. SAWCUT AND REMOVE EXISTING ASPHALT PAVEMENT
3. COORDINATE EXISTING GAS SERVICE/METER REMOVAL WITH BOULDER UTILITIES
4. REMOVE EXISTING ASPHALT MARKINGS
5. REMOVE EXISTING CONCRETE PAVEMENT
6. REMOVE EXISTING LIGHT/UTILITY POLE, GUY WIRES, ELECTRICAL BOXES, AND LINES, COORDINATE WITH BOULDER UTILITIES
7. REMOVE EXISTING SANITARY SERVICE
8. REMOVE EXISTING BOLLARD
9. REMOVE EXISTING GRAVEL
10. REMOVE EXISTING FENCE
11. REMOVE EXISTING SIGN
12. REMOVE EXISTING STORM, COORDINATE REMOVAL WITH BOULDER UTILITIES
13. COORDINATE EXISTING WATER SERVICE/METER AND VALVE REMOVAL WITH BOULDER UTILITIES
14. REMOVE EXISTING CURB AND GUTTER
15. PROTECT EXISTING UTILITIES
16. PROTECT EXISTING SIGN
17. CONTRACTOR TO COMPLETELY REMOVE SEPTIC TANKS, DRAIN LINES AND DRAIN FIELDS
18. REMOVE EXISTING TREES WITHIN LIMITS OF DISTURBANCE

NOTES:

1. SOME STRUCTURES SHOWN ON PLAN MAY HAVE ALREADY BEEN REMOVED, CONTRACTOR TO VERIFY EXISTING CONDITIONS PRIOR TO CONSTRUCTION.
2. UNUSED SERVICE CONNECTIONS TO BE ABANDONED AT THE UTILITY MAIN PER CITY OF BOULDER DESIGN & CONSTRUCTION STANDARDS.

BENCHMARKS:

1. PROJECT BENCHMARK: THE PUBLISHED VALUES OF BOULDER COUNTY PRIMARY MONUMENT CONTROL STATION "B 322 RESET". EL=5508.90' (NAVD88), N:1272428.69, E:3061900.56
2. SITE BENCHMARK: 3" ALUMINUM CAP LOCATED IN THE INTERSECTION OF 47TH STREET AND INDEPENDENCE ROAD. EL=5304.38' (NAVD88), N:1257929.36, E:3072507.66

BASIS OF BEARINGS:

BEARINGS ARE BASED ON THE WEST LINE OF THE NW1/4 OF SECTION 21 AS HAVING A BEARING OF N00°06'56"W FROM THE W1/4 CORNER BEING MONUMENTED WITH A 3" ALUMINUM CAP TO THE W-N1/16 CORNER BEING ALSO MONUMENTED WITH A 3" ALUMINUM CAP AS SHOWN HEREON.

LEGEND

LOD	LIMITS OF DISTURBANCE
	SAWCUT LINE
	CURB & GUTTER
	PROPERTY BOUNDARY
	PROPERTY LINE
FO	UNDERGROUND FIBER OPTIC LINES
OP	OVERHEAD POWER
SD	STORM SEWER PIPE
W	WATER LINES
GAS	GAS LINES
X	BARBWIRE FENCE
	WOOD FENCE
	CHAINLINK FENCE
	BOLLARD
DESCRIPTION	CONTROL POINT
E	ELECTRIC BOX
EMH	ELECTRIC MANHOLE
ER	ELECTRIC RISER
EV	ELECTRIC VAULT
FV	FIBER OPTIC VAULT
	FIRE HYDRANT
GV	GAS VALVE
LTP	LIGHT POLE
	PROPERTY MONUMENT, FOUND
	PROPERTY MONUMENT, SET
SSMH	SANITARY SEWER MANHOLE
	SIGN, AS DESCRIBED
	STEEL POST
SDMH	STORM SEWER MANHOLE
	TELEPHONE CABINET
TP	TELEPHONE PEDESTAL
TLP	TRAFFIC LIGHT POLE
	TRAFFIC SIGNAL BOX
	TRANSFORMER
WV	WATER VALVE
	TREE, DECIDUOUS

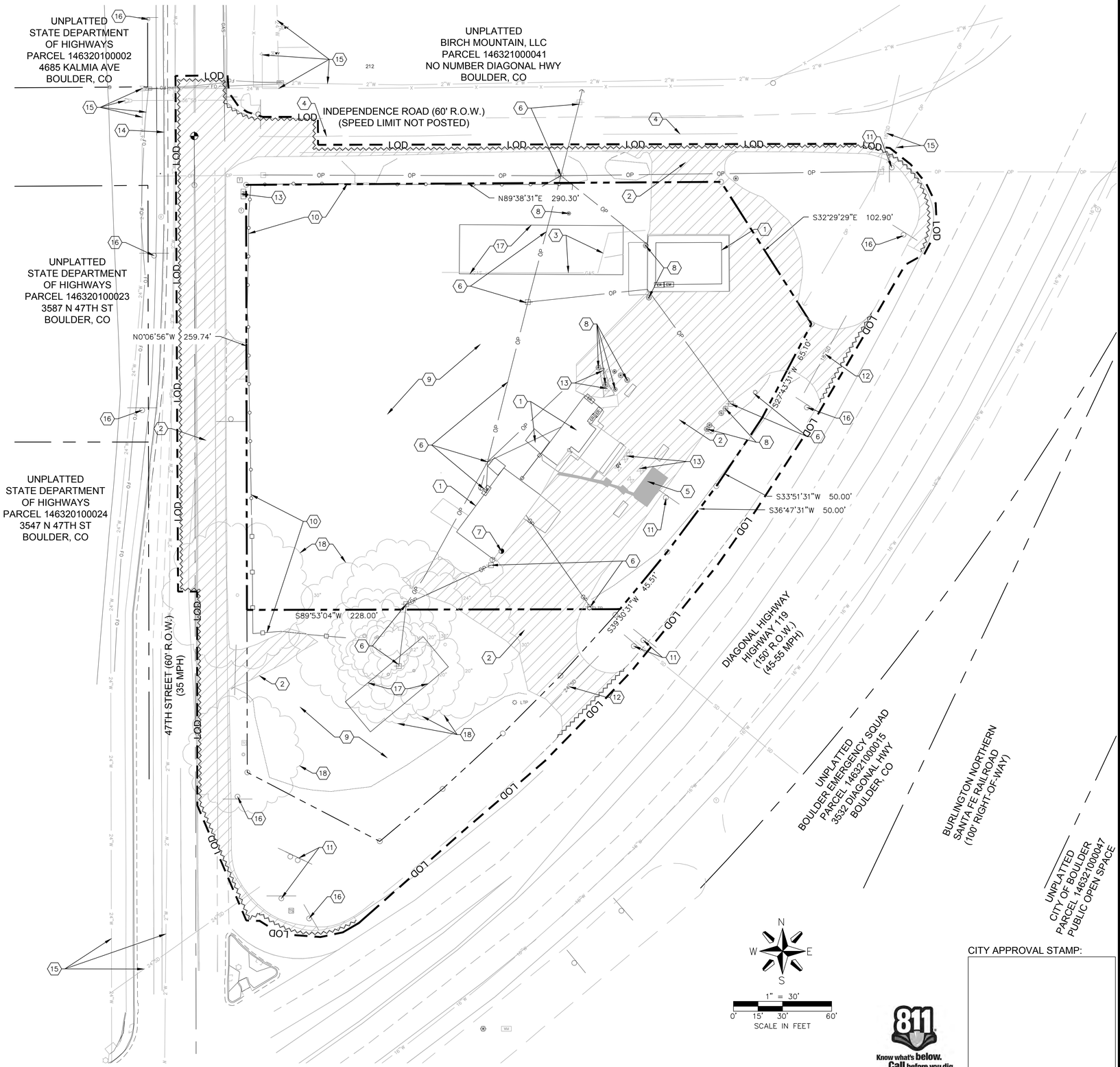

CITY APPROVAL STAMP:

Know what's below. Call before you dig.

CALL 811 SEVENTY-TWO HOURS PRIOR TO DIGGING, GRADING OR EXCAVATING FOR THE MARKING OF UNDERGROUND MEMBER UTILITIES

OLSSON ASSOCIATES
4690 Table Mountain Drive
Suite 200
Golden, CO 80403
TEL 303.237.2072
FAX 303.237.2659
OA # 012-1417
www.olssonassociates.com

COLORADO LICENSED PROFESSIONAL ENGINEER JOHN EBRAMOWICZ 06/20/14 42161

Kum & Go

6400 Westown Parkway
West Des Moines, Iowa
50266
P: 515-226-0128
F: 515-223-9873

#943 - BOULDER, COLORADO
3365 DIAGONAL HWY.

DEMOLITION PLAN

KG PROJECT TEAM:
RDR: JXH
SDM: RJH
CPM: TLK

REVISIONS

	DATE	REVISION DESCRIPTION

DATE: 06-20-2014

SHEET NUMBER:
C1.4
05 OF 32

DWG: F:\Projects\012-1417_LDVP\Final_Plans\121417_DEM.dwg USER: sbower
DATE: Jul 01, 2014 2:41pm XREFS: 121417_XBASE 121417_PBASE 121417_TBLK_CD

GRADING NOTES:

1. THE PROPOSED CONTOURS REPRESENT TOP OF SLAB IN PAVEMENT & BUILDING. IN ALL OTHER AREAS, THEY REPRESENT THE FINISHED GROUND SURFACE. THE CONTRACTOR SHALL BE RESPONSIBLE FOR VERIFYING THE PAVEMENT CROSS-SECTION DEPTH AND SHALL ADJUST THE SUBGRADE ELEVATION AND QUANTITIES ACCORDINGLY PRIOR TO BEGINNING GRADING OPERATIONS.
2. ALL SPOT ELEVATIONS ARE FLOWLINE ELEVATIONS UNLESS OTHERWISE NOTED.
3. ALL HERBACEOUS VEGETATION SHALL BE REMOVED FROM WITHIN THE LIMITS OF THE GRADING AND REDISTRIBUTED WITH THE TOPSOIL.
4. FOR PROPER COMPACTION OF FILL MATERIAL, BUILDING PAD PREPARATION, AND PAVING SUBGRADE, SEE GEOTECHNICAL REPORT PREPARED BY OLSSON ASSOCIATES, DATED NOVEMBER 15, 2012.
5. ALL ADA ACCESSIBLE STALLS/ROUTES TO BE CONSTRUCTED PER ADA STANDARDS.
6. REFERENCE POINTS FOR STRUCTURES AREA AS FOLLOWS:
   - CENTER OF MANHOLES/CLEANOUTS
   - CENTER OF INLET FACE AT TOP OF CURB FOR CURB INLETS
   - CENTER OF INLET FOR GRATE INLETS
7. STORM SEWER PIPE LENGTHS ARE MEASURED AS FOLLOWS:
   - CENTER OF MANHOLES/CLEANOUTS
   - INSIDE WALL OF CURB INLET
   - CENTER OF GRATE INLET
   - LENGTHS LISTED ARE 2D MEASUREMENTS

FLAG NOTES:

1. ADA ACCESSIBLE STALL (DO NOT EXCEED 2% GRADE IN ANY DIRECTION)
2. MATCH EXISTING GRADE (CONTRACTOR TO VERIFY)
3. PROPOSED 6" STRUCTURAL CURB/SIDEWALK, SEE STRUCTURAL PLANS
4. PROPOSED 6" STANDARD CURB, SEE SHEET C5.1
5. ALL FILL LIDS FOR UNDERGROUND TANKS TO BE 1" ABOVE FINISHED GRADE
6. CONNECT TO BUILDING DOWNSPOUT, SEE ARCHITECTURAL PLANS FOR DOWNSPOUT LOCATION AND DETAIL ON SHEET C5.2
7. CONNECT TO CANOPY DOWNSPOUT, MAINTAIN MINIMUM COVER OF 1' MEASURED FROM TOP OF PAVEMENT, SEE SHEET C5.2
8. INSTALL STORM SEWER PIPE EXTENSION
9. INSTALL STORM SEWER PIPE; LENGTH, SIZE, AND SLOPE PER PLAN
10. EXISTING STORM SEWER PIPE, SIZE PER PLAN
11. GRADE BREAK, SEE SHEET C4.1
12. PROPOSED CURB CUT, SEE SHEET C4.1, WIDTH PER PLAN
13. INSTALL STORM SEWER WYE AND CLEANOUT WITH WATERTIGHT TRAFFIC RATED LID, SEE SHEET C5.2
14. INSTALL DETENTION AND WATER QUALITY POND REQUIRED VOLUME: 0.039 AC-FT, PROPOSED VOLUME 0.201 AC-FT, SEE SHEET C5.2 FOR ADDITIONAL DETAIL
15. OUTLET STRUCTURE, SEE SHEET C2.6 FOR DETAIL
16. INSTALL RIPRAP PROTECTION, SEE SHEET C2.5 FOR DETAIL
17. INSTALL FLARED END SECTION WITH RIPRAP PAD, SEE SHEET C2.5 FOR DETAIL
18. PROPOSED CITY OF BOULDER STANDARD 6" CURB AND GUTTER
19. CONNECT TO EXISTING STORM SEWER PIPE
20. PROPOSED CURB CUT FOR DRAINAGE POND MAINTENANCE ACCESS, WIDTH PER PLAN
21. INSTALL STORM SEWER WYE
22. INSTALL CLEANOUT WITH WATERTIGHT TRAFFIC RATED LID, SEE SHEET C5.2

STORM SEWER STRUCTURE TABLE

ID	NORTHING	EASTING	RIM / GRATE	INVERT	NOTES
A	1257687.45	3072560.62	5303.84 RIM	10": 5299.02	13
B	1257687.62	3072646.10	5301.56 RIM	10": 5298.31	22
C	1257687.73	3072697.96	5300.13 RIM	15": 5297.88	13
D	1257862.33	3072697.61	5300.58 RIM	15": 5297.31	13
E	1257863.90	3072783.18	5299.00 RIM	15": 5297.02	13
F	1257848.37	3072798.78	5296.94 RIM	15": 5296.94	17
G	1257866.21	3072916.60	5294.62 RIM	18": 5294.62	17
H	1257740.58	3072809.58	5297.69 GRATE	12": 5295.00	15
I	1257701.16	3072828.72	5294.66 RIM	12": 5294.66	17
J	1257695.13	3072825.20	5294.51 RIM	18": 5294.51	17
K	1257628.27	3072768.75	5294.07 RIM	18": 5294.07	17
L	1257626.59	3072770.04	5294.02 RIM	22": 5294.02	17
M	1257482.19	3072563.97	5296.30 RIM	24": 5296.30	17
N	1257770.44	3072697.79	5301.00 RIM	15": 5297.61	22

BENCHMARKS:

1. PROJECT BENCHMARK: THE PUBLISHED VALUES OF BOULDER COUNTY PRIMARY MONUMENT CONTROL STATION "B 322 RESET". EL=5508.90' (NAVD88), N:1272428.69, E:3061900.56
2. SITE BENCHMARK: 3" ALUMINUM CAP LOCATED IN THE INTERSECTION OF 47TH STREET AND INDEPENDENCE ROAD. EL=5304.38' (NAVD88), N:1257929.36, E:3072507.66

BASIS OF BEARINGS:

BEARINGS ARE BASED ON THE WEST LINE OF THE NW1/4 OF SECTION 21 AS HAVING A BEARING OF N00°06'56"W FROM THE W1/4 CORNER BEING MONUMENTED WITH A 3" ALUMINUM CAP TO THE W-N1/16 CORNER BEING ALSO MONUMENTED WITH A 3" ALUMINUM CAP AS SHOWN HEREON.

FLOOD ZONE:

THE SUBJECT PROPERTY FALLS WITHIN ZONE "X" DESCRIBED AS AREAS DETERMINED TO BE OUTSIDE THE 500-YEAR FLOODPLAIN; ACCORDING TO FEMA FLOOD INSURANCE RATE MAP 08013C0415F WITH AN EFFECTIVE DATE OF JUNE 2, 1995.

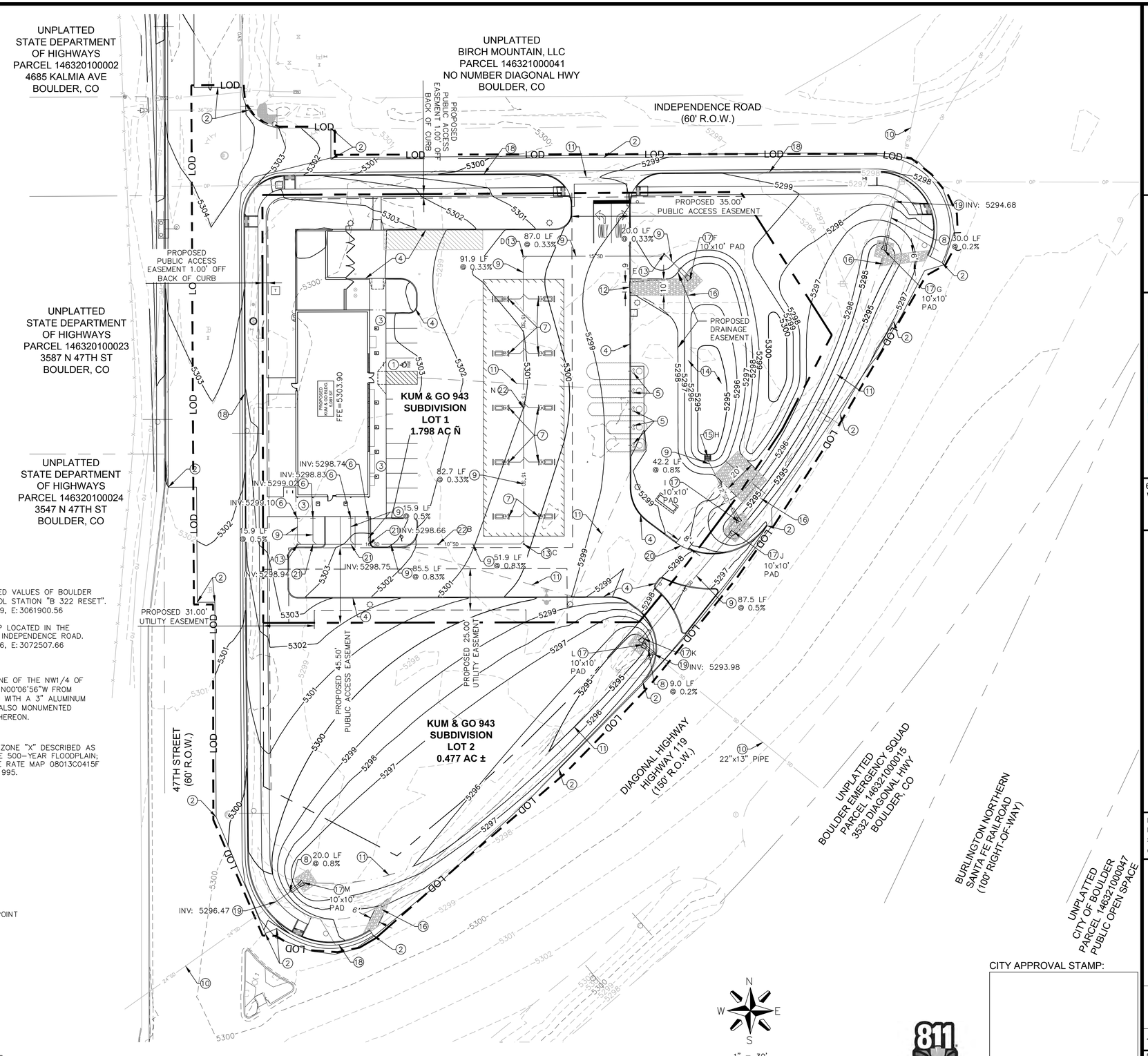

LEGEND

- LIMITS OF DISTURBANCE
- PROPERTY LINE
- PROPOSED BOUNDARY LINE
- PROPOSED EASEMENT LINE
- PROPOSED GRADE BREAK
- PROPOSED MAJOR CONTOUR
- PROPOSED MINOR CONTOUR
- EXISTING MAJOR CONTOUR
- EXISTING MINOR CONTOUR
- EXISTING EDGE OF ASPHALT
- PROPOSED CONCRETE CURB AND GUTTER
- EXISTING OVERHEAD POWER
- EXISTING STORM SEWER
- PROPOSED STORM SEWER
- SECTION CORNER
- LIGHT POLE
- TRANSFORMER
- ELECTRIC VAULT
- SIGN
- BOLLARD
- BENCHMARK/CONTROL POINT
- POWER POLE
- GUY WIRE
- TELEPHONE PEDESTAL
- TELEPHONE RISER
- TELEPHONE MANHOLE
- TRAFFIC SIGNAL BOX
- TRAFFIC SIGNAL POLE
- STORM SEWER MANHOLE
- EXISTING CURB INLET
- FIRE HYDRANT
- WATER VALVE
- WATER METER
- EXISTING DECIDUOUS TREE
- CLEANOUT
- GREASE INTERCEPTOR LID
- SANITARY SEWER MANHOLE
- FLARED END SECTION
- RIPRAP

Know what's below. Call before you dig.

CALL 811 SEVENTY-TWO HOURS PRIOR TO DIGGING, GRADING OR EXCAVATING FOR THE MARKING OF UNDERGROUND MEMBER UTILITIES

CITY APPROVAL STAMP:

OLSSON ASSOCIATES
4690 Table Mountain Drive
Suite 200
Golden, CO 80403
TEL 303.237.2072
FAX 303.237.2659
OA # 012-1417
www.olssonassociates.com

COLORADO LICENSED PROFESSIONAL ENGINEER JOSE ERRAMOUSPE 06/20/14 42141

Kum & Go

6400 Westown Parkway
West Des Moines, Iowa
50266
P: 515-226-0128
F: 515-223-9873

#943 - BOULDER, COLORADO
3365 DIAGONAL HWY.
GRADING AND DRAINAGE PLAN

KG PROJECT TEAM:
RDR: JXH
SDM: RJH
CPM: TLK

DATE	REVISION DESCRIPTION

REVISIONS

DATE: 06-20-2014

SHEET NUMBER:
C2.1
06 OF 32

DWG: F:\Projects\012-1417_LDVP\Final_Plans\121417_GRD.dwg USER: sbower
DATE: Jul 01, 2014 2:41pm XREFS: 121417_XBASE 121417_PBASE 121417_TBLK_CD
DOCUMENT REVISION DATE AUGUST 2012

NOTES:

1. ALL DISTURBED AREAS NOT COVER BY PAVEMENT OR SEED/MULCH SHALL BE PERMANENTLY LANDSCAPED ACCORDING TO THE LANDSCAPE PLAN.
2. CONTRACTOR SHALL BE RESPONSIBLE FOR MAINTAINING THIS PLAN THROUGHOUT CONSTRUCTION AND PERFORMING INSPECTIONS/MAINTANCE PER THE CDPHE PERMIT, UNTIL SUCH TIME THE PERMIT IS CLOSED.
3. THE UNDERGROUND UTILITIES SHOWN HAVE BEEN LOCATED FROM FIELD SURVEY INFORMATION AND EXISTING DRAWINGS. THE SURVEYOR MAKES NO GUARANTEES THAT THE UTILITIES SHOWN COMPRISE ALL SUCH UTILITIES IN THE AREA, EITHER IN-SERVICE OR ABANDONED. THE SURVEYOR FURTHER DOES NOT WARRANT THAT THE UTILITIES SHOWN ARE IN THE EXACT LOCATION INDICATED, ALTHOUGH THE SURVEYOR DOES CERTIFY THAT THEY ARE LOCATED AS ACCURATELY AS POSSIBLE FROM INFORMATION AVAILABLE. THE SURVEYOR HAS NOT PHYSICALLY LOCATED THE UNDERGROUND UTILITIES. THIS INCLUDES PRIVATE AND PUBLIC UTILITIES.
4. NO WETLANDS WERE OBSERVED WITHIN THE LIMITS OF CONSTRUCTION FOR THE PROJECT.
5. IF REQUIRED, THE CONTRACTOR SHALL OBTAIN ALL LOCAL AND STATE PERMITS AND AUTHORIZATION TO DISCHARGE DEWATERING ACTIVITIES. GROUNDWATER SHALL BE SAMPLED AND SENT TO AN APPROVED LABORATORY FOR TESTING PRIOR TO BEING DISCHARGED. TESTING SHALL BE IN ACCORDANCE WITH PERMIT FOR STORMWATER DISCHARGE.
6. DEDICATED ASPHALT OR CONCRETE BATCH PLANTS ARE NOT ANTICIPATED TO BE LOCATED ON THIS PROJECT SITE.
7. ALL EROSION CONTROL MEASURES TO BE INSTALLED PER DETAILS AND SPECIFICATIONS SHOWN WITHIN THESE PLANS OR THE STORMWATER MANAGEMENT PLAN (SWMP) REPORT.

EROSION CONTROL LEGEND

SF	SF	INSTALL SILT FENCE, SEE SHEET C2.5
VTC		INSTALL VEHICLE TRACKING PAD, SEE SHEET C2.5
SSA		INSTALL STABILIZED STAGING AREA PER URBAN DRAINAGE DETAIL SM-6, SEE SHEET C2.6
CWA		INSTALL CONCRETE WASHOUT AREA PER TEMPORARY CONCRETE WASHOUT DETAIL, SEE SHEET C2.6
IP		INSTALL INLET PROTECTION, SEE SHEET C2.4
ECB		INSTALL EROSION CONTROL BLANKET, SEE SHEET C2.4
SB		INSTALL TEMPORARY SEDIMENT BASIN, SEE SHEET C2.4
CD		INSTALL 18" TALL CHECK DAM, SEE SHEET C2.3
CS		INSTALL CURB SOCK, SEE SHEET C2.4

CITY STANDARD EROSION CONTROL NOTES:

1. ALL TEMPORARY EROSION CONTROL FACILITIES SHALL BE INSTALLED BEFORE ANY CONSTRUCTION ACTIVITIES TAKE PLACE.
2. SOLID WASTE, INDUSTRIAL WASTE, YARD WASTE AND ANY OTHER POLLUTANTS OR WASTE ON ANY CONSTRUCTION SITE SHALL BE CONTROLLED THROUGH THE USE OF BMP'S. WASTE AND/OR RECYCLING CONTAINERS SHALL BE PROVIDED AND MAINTAINED BY THE OWNER OR CONTRACTOR ON CONSTRUCTION SITES WHERE THERE IS THE POTENTIAL FOR RELEASE OF WASTE. UN-CONTAINED WASTE THAT MAY BLOW, WASH OR OTHERWISE BE RELEASED FROM THE SITE IS PROHIBITED. SANITARY WASTE FACILITIES SHALL BE PROVIDED AND MAINTAINED BY THE OWNER OR CONTRACTOR.
3. READY-MIXED CONCRETE, OR ANY MATERIALS RESULTING FROM THE CLEANING OF VEHICLES OR EQUIPMENT CONTAINING OR USED IN TRANSPORTING OR APPLYING IT, SHALL BE CONTAINED ON CONSTRUCTION SITES FOR PROPER DISPOSAL. RELEASE OF THESE MATERIALS IS PROHIBITED.
4. COVER SHALL BE APPLIED WITHIN 14 DAYS TO INACTIVE SOIL STOCKPILES, AND SHALL BE MAINTAINED FOR STOCKPILES THAT ARE PROPOSED TO REMAIN IN PLACE LONGER THAN 30 CALENDAR DAYS.
5. BMP'S SHALL BE IMPLEMENTED TO PREVENT THE RELEASE OF SEDIMENT FROM CONSTRUCTION SITES. VEHICLE TRACKING OF MUD SHALL NOT BE ALLOWED TO ENTER THE STORM WATER SYSTEM OR WATERS OF THE STATE. SEDIMENT TRACKED ONTO PUBLIC STREETS SHALL BE REMOVED.
6. TECHNIQUES SHALL BE USED TO PREVENT DUST, SEDIMENT OR DEBRIS BLOWING FROM THE SITE.
7. STORM WATER DISCHARGES FROM CONSTRUCTION ACTIVITIES SHALL NOT CAUSE OR THREATEN TO CAUSE POLLUTION, CONTAMINATION OR DEGRADATION OF WATERS OF THE STATE.
8. ALL EARTH DISTURBANCES SHALL BE DESIGNED, CONSTRUCTED AND COMPLETED TO LIMIT THE EXPOSED AREA OF ANY DISTURBED LAND TO THE SHORTEST POSSIBLE PERIOD OF TIME.
9. BULK STORAGE STRUCTURES FOR PETROLEUM PRODUCTS AND OTHER CHEMICALS SHALL HAVE ADEQUATE PROTECTION SO AS TO CONTAIN ALL SPILLS AND PREVENT ANY SPILLED MATERIAL FROM ENTERING THE STORM WATER SYSTEM OR WATERS OF THE STATE.
10. ANY DISTURBANCE TO TEMPORARY AND PERMANENT BMP'S SHALL BE REPAIRED OR REPLACED WITHIN 48 HOURS.
11. THE PROPERTY OWNER AND SUBSEQUENT PROPERTY OWNERS WILL BE RESPONSIBLE FOR CONTINUED COMPLIANCE WITH THE REQUIREMENTS OF THIS SECTION, DURING CONSTRUCTION ACTIVITY ON THE SITE.
12. ALL TEMPORARY EROSION AND SEDIMENT CONTROL MEASURES SHALL BE REMOVED AND DISPOSED WITHIN 30 DAYS AFTER FINAL SITE STABILIZATION IS ACHIEVED, OR AFTER THE TEMPORARY MEASURES ARE NO LONGER NEEDED, WHICHEVER OCCURS FIRST.

ENGINEER'S STATEMENT

THIS EROSION AND STORMWATER QUALITY CONTROL/GRADING PLAN WAS PREPARED UNDER MY DIRECTION AND SUPERVISION AND IS CORRECT TO THE BEST OF MY KNOWLEDGE AND BELIEF. IF SUCH WORK IS PERFORMED IN ACCORDANCE WITH THE GRADING AND EROSION CONTROL PLAN, THE WORK WILL NOT BECOME A HAZARD TO LIFE AND LIMB, ENDANGER PROPERTY, OR ADVERSELY AFFECT THE SAFETY, USE, OR STABILITY OF A PUBLIC WAY, DRAINAGE CHANNEL, OR OTHER PROPERTY.

SIGNATURE: _____ DATE: _____

PRINTED NAME: _____ JOSH ERRAMOUSPE _____

DEVELOPER/OWNER'S STATEMENT

THE OWNER WILL COMPLY WITH THE REQUIREMENTS OF THE EROSION AND STORMWATER QUALITY CONTROL PLAN INCLUDING TEMPORARY BMP INSPECTION REQUIREMENTS AND FINAL STABILIZATION REQUIREMENTS. I ACKNOWLEDGE THE RESPONSIBILITY TO DETERMINE WHETHER THE CONSTRUCTION ACTIVITIES ON THESE PLANS REQUIRE COLORADO DISCHARGE PERMIT SYSTEM (CDPS) PERMITTING FOR STORMWATER DISCHARGES ASSOCIATED WITH CONSTRUCTION ACTIVITY.

DEVELOPER/OWNER SIGNATURE: _____

NAME OF DEVELOPER/OWNER: RYAN HALDER DATE: _____

DBA: KUM & GO, L.C. PHONE: 515.457.6232

TITLE: SITE DEVELOPMENT MANAGER EMAIL: RJH@KUMANDGO.COM

ADDRESS: 6400 WESTOWN PARKWAY, WEST DES MOINES, IA 50266 FAX: 515.226.1595

LEGEND:

	PROPOSED BOUNDARY LINE
	PROPERTY LINE
1010	PROPOSED MAJOR CONTOUR
1013	PROPOSED MINOR CONTOUR
1010	EXISTING MAJOR CONTOUR
1013	EXISTING MINOR CONTOUR
LOD	LIMITS OF DISTURBANCE
	PROPOSED CURB AND GUTTER
	PROPOSED CURB
	EXISTING CURB AND GUTTER
	EXISTING WIRE FENCE
	EXISTING BOLLARD FENCE
	LIGHT POLE
T	TRANSFORMER
	DRAINAGE ARROW
E	ELECTRIC BOX
	ELECTRIC OUTLET
	FIRE HYDRANT
(EX) (PR)	WATER VALVE
(EX) (PR)	SIGN
TP	TELEPHONE PEDESTAL
TVP	TELEVISION PEDESTAL
	TELEPHONE CABINET
	CLEANOUT
	GREASE INTERCEPTOR LID
(EX) (PR)	SANITARY SEWER MANHOLE
	FLARED END SECTION
	GUY WIRE
(EX) (PR)	UTILITY POLE
	BOLLARD
	DECIDUOUS TREE
	CONIFEROUS TREE
	RIPRAP

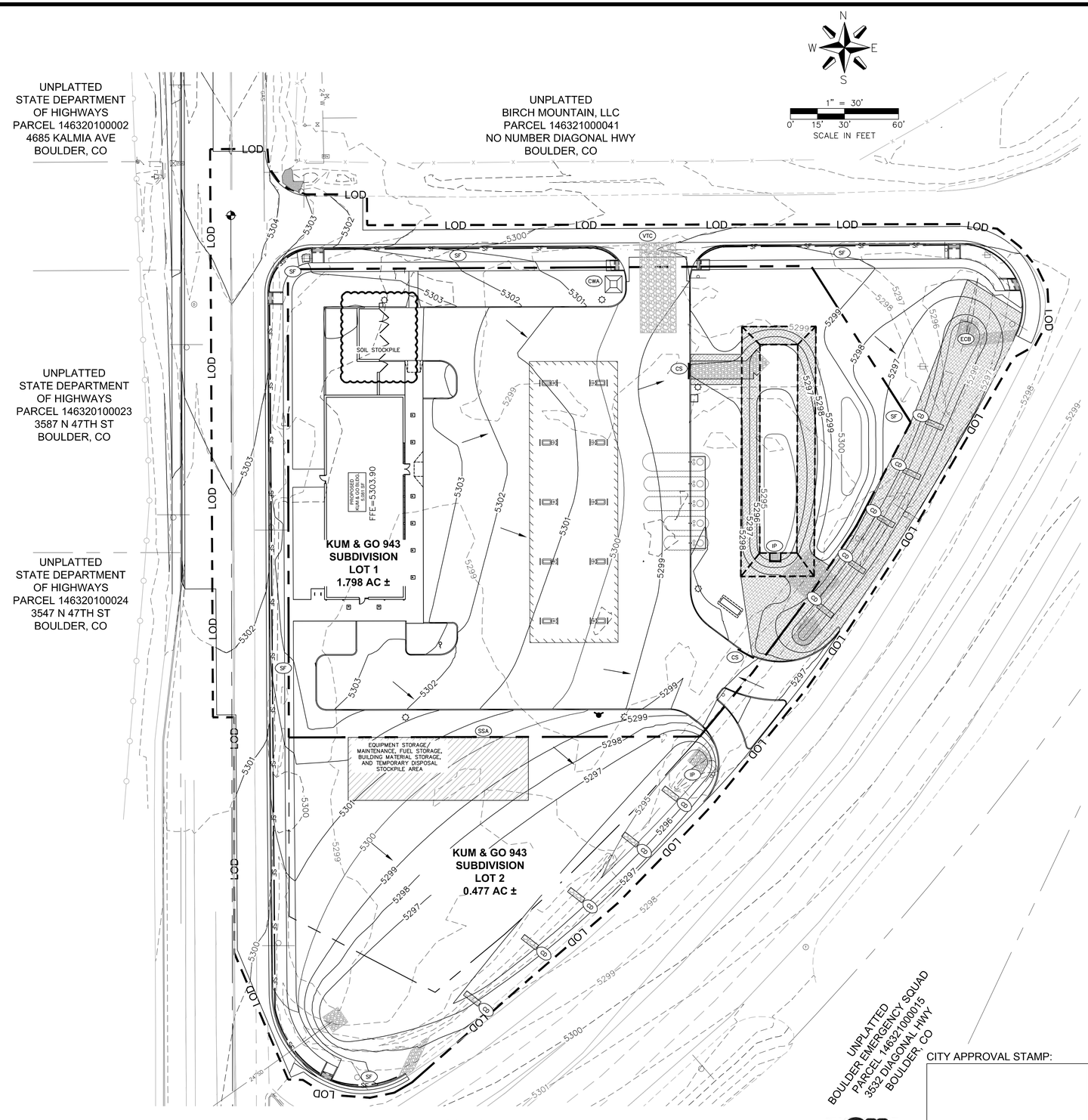

BENCHMARKS:

1. PROJECT BENCHMARK: THE PUBLISHED VALUES OF BOULDER COUNTY PRIMARY MONUMENT CONTROL STATION "B 322 RESET". EL=5508.90' (NAVD88), N:1272428.69, E:3061900.56
2. SITE BENCHMARK: 3" ALUMINUM CAP LOCATED IN THE INTERSECTION OF 47TH STREET AND INDEPENDENCE ROAD. EL=5304.38' (NAVD88), N:1257929.36, E:3072507.66

FLOOD ZONE:

THE SUBJECT PROPERTY FALLS WITHIN ZONE "X" DESCRIBED AS AREAS DETERMINED TO BE OUTSIDE THE 500-YEAR FLOODPLAIN; ACCORDING TO FEMA FLOOD INSURANCE RATE MAP 08013C0411J WITH AN EFFECTIVE DATE OF MAY 6, 1996.

811 Know what's below. Call before you dig.

CALL 811 SEVENTY-TWO HOURS PRIOR TO DIGGING, GRADING OR EXCAVATING FOR THE MARKING OF UNDERGROUND MEMBER UTILITIES

CITY APPROVAL STAMP:

OLSSON ASSOCIATES
4690 Table Mountain Drive
Suite 200
Golden, CO 80403
TEL 303.237.2072
FAX 303.237.2659
OA # 012-1417
www.olssonassociates.com

COLORADO LICENSED PROFESSIONAL ENGINEER JOSH ERRAMOUSPE 06/20/14 42161

Kum & Go

6400 Westown Parkway
West Des Moines, Iowa
50266
P: 515-226-0128
F: 515-223-9873

#943 - BOULDER, COLORADO
3365 DIAGONAL HWY.

EROSION CONTROL PLAN

KG PROJECT TEAM:
RDR: JXH
SDM: RJH
CPM: TLK

REVISIONS		
△	DATE	REVISION DESCRIPTION

DATE: 06-20-2014

SHEET NUMBER:
C2.2
07 OF 32

DWG: F:\Projects\012-1417_LDVP\Final_Plans\121417_ERC01.dwg USER: sbower
DATE: Jul 01, 2014 2:41pm XREFS: 121417_PBASE 121417_XBASE 121417_TBLK_CD
DOCUMENT REVISION DATE: AUGUST 2012

Check Dams (CD) — EC-12

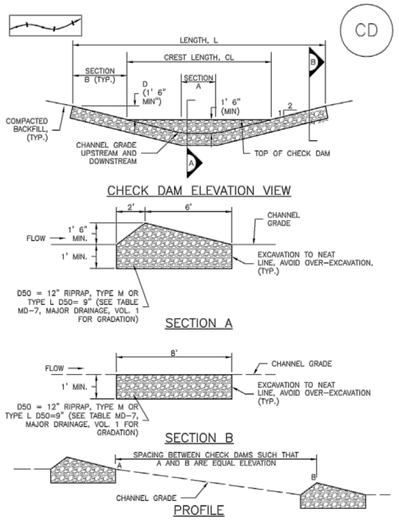

CD-1, CHECK DAM

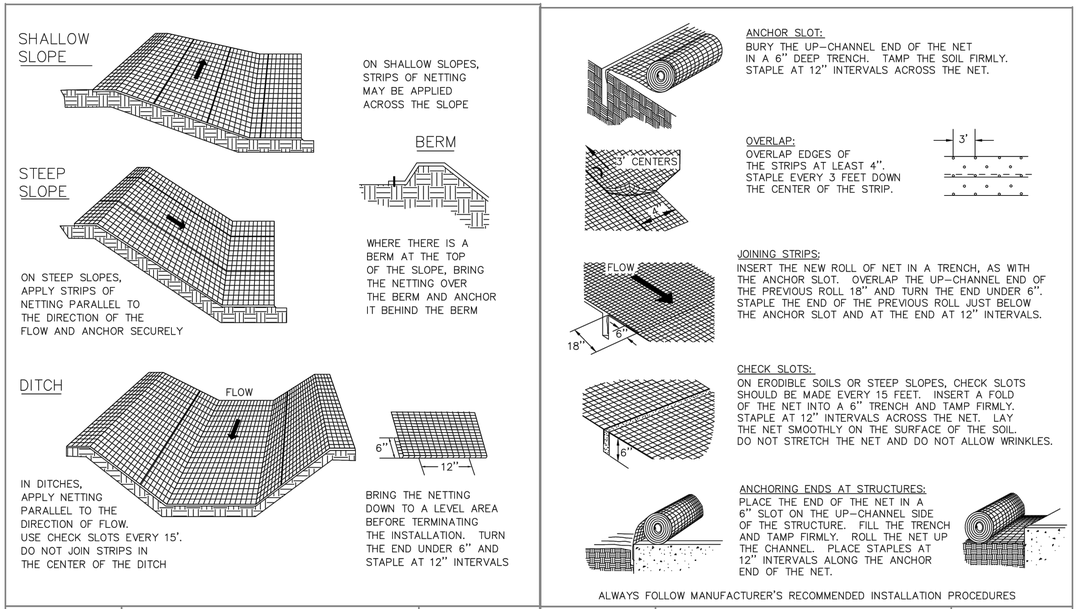

DRAWN BY: JSH CHECKED BY: RJH APPROVED BY: DIRECTOR OF PUBLIC WORKS	CITY OF BOULDER, COLORADO ORIENTATION OF NETTING AND MATTING	ISSUED: JULY 2, 1998 REVISED: OCT. 17, 2000 DRAWING NO. 7.27	DRAWN BY: JSH CHECKED BY: RJH APPROVED BY: DIRECTOR OF PUBLIC WORKS	CITY OF BOULDER, COLORADO INSTALLATION OF NETTING AND MATTING	ISSUED: JULY 2, 1998 REVISED: OCT. 17, 2000 DRAWING NO. 7.28

EC-1 — Surface Roughening (SR)

SURFACE ROUGHENING INSTALLATION NOTES

1. SEE PLAN VIEW FOR:
   –LOCATION(S) OF SURFACE ROUGHENING.

2. SURFACE ROUGHENING SHALL BE PROVIDED PROMPTLY AFTER COMPLETION OF FINISHED GRADING (FOR AREAS NOT RECEIVING TOPSOIL) OR PRIOR TO TOPSOIL PLACEMENT OR ANY FORECASTED RAIN EVENT.

3. AREAS WHERE BUILDING FOUNDATIONS, PAVEMENT, OR SOD WILL BE PLACED WITHOUT DELAY IN THE CONSTRUCTION SEQUENCE, SURFACE ROUGHENING IS NOT REQUIRED.

4. DISTURBED SURFACES SHALL BE ROUGHENED USING RIPPING OR TILLING EQUIPMENT ON THE CONTOUR OR TRACKING UP AND DOWN A SLOPE USING EQUIPMENT TREADS.

5. A FARMING DISK SHALL NOT BE USED FOR SURFACE ROUGHENING.

SURFACE ROUGHENING MAINTENANCE NOTES

1. INSPECT BMPs EACH WORKDAY, AND MAINTAIN THEM IN EFFECTIVE OPERATING CONDITION. MAINTENANCE OF BMPs SHOULD BE PROACTIVE, NOT REACTIVE. INSPECT BMPs AS SOON AS POSSIBLE (AND ALWAYS WITHIN 24 HOURS) FOLLOWING A STORM THAT CAUSES SURFACE EROSION, AND PERFORM NECESSARY MAINTENANCE.

2. FREQUENT OBSERVATIONS AND MAINTENANCE ARE NECESSARY TO MAINTAIN BMPs IN EFFECTIVE OPERATING CONDITION. INSPECTIONS AND CORRECTIVE MEASURES SHOULD BE DOCUMENTED THOROUGHLY.

3. WHERE BMPs HAVE FAILED, REPAIR OR REPLACE UPON DISCOVERY OF THE FAILURE.

4. VEHICLES AND EQUIPMENT SHALL NOT BE DRIVEN OVER AREAS THAT HAVE BEEN SURFACE ROUGHENED.

5. IN NON-TURF GRASS FINISHED AREAS, SEEDING AND MULCHING SHALL TAKE PLACE DIRECTLY OVER SURFACE ROUGHENED AREAS WITHOUT FIRST SMOOTHING OUT THE SURFACE.

6. IN AREAS NOT SEEDED AND MULCHED AFTER SURFACE ROUGHENING, SURFACES SHALL BE RE-ROUGHENED AS NECESSARY TO MAINTAIN GROOVE DEPTH AND SMOOTH OVER RILL EROSION.

(DETAILS ADAPTED FROM TOWN OF PARKER, COLORADO, NOT AVAILABLE IN AUTOCAD)

NOTE: MANY JURISDICTIONS HAVE BMP DETAILS THAT VARY FROM UDFCD STANDARD DETAILS. CONSULT WITH LOCAL JURISDICTIONS AS TO WHICH DETAIL SHOULD BE USED WHEN DIFFERENCES ARE NOTED.

Inlet Protection (IP) — SC-6

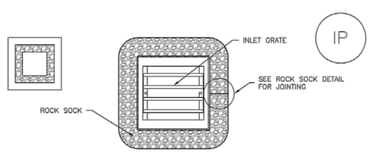

IP-3. ROCK SOCK SUMP/AREA INLET PROTECTION

ROCK SOCK SUMP/AREA INLET PROTECTION INSTALLATION NOTES
1. SEE ROCK SOCK DESIGN DETAIL FOR INSTALLATION REQUIREMENTS.

2. STRAW WATTLES/SEDIMENT CONTROL LOGS MAY BE USED IN PLACE OF ROCK SOCKS FOR INLETS IN PERVIOUS AREAS. INSTALL PER SEDIMENT CONTROL LOG DETAIL.

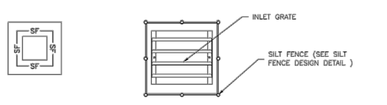

IP-4. SILT FENCE FOR SUMP INLET PROTECTION

SILT FENCE INLET PROTECTION INSTALLATION NOTES

1. SEE SILT FENCE DESIGN DETAIL FOR INSTALLATION REQUIREMENTS.

2. POSTS SHALL BE PLACED AT EACH CORNER OF THE INLET AND AROUND THE EDGES AT A MAXIMUM SPACING OF 3 FEET.

3. STRAW WATTLES/SEDIMENT CONTROL LOGS MAY BE USED IN PLACE OF SILT FENCE FOR INLETS IN PERVIOUS AREAS. INSTALL PER SEDIMENT CONTROL LOG DETAIL.

SC-6 — Inlet Protection (IP)

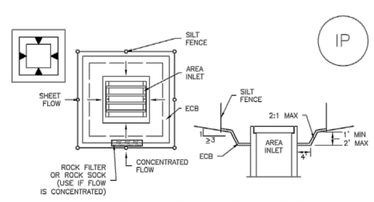

IP-5. OVEREXCAVATION INLET PROTECTION

OVEREXCAVATION INLET PROTECTION INSTALLATION NOTES

1. THIS FORM OF INLET PROTECTION IS PRIMARILY APPLICABLE FOR SITES THAT HAVE NOT YET REACHED FINAL GRADE AND SHOULD BE USED ONLY FOR INLETS WITH A RELATIVELY SMALL CONTRIBUTING DRAINAGE AREA.

2. WHEN USING FOR CONCENTRATED FLOWS, SHAPE BASIN IN 2:1 RATIO WITH LENGTH ORIENTED TOWARDS DIRECTION OF FLOW.

3. SEDIMENT MUST BE PERIODICALLY REMOVED FROM THE OVEREXCAVATED AREA.

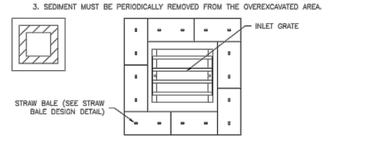

IP-6. STRAW BALE FOR SUMP INLET PROTECTION

STRAW BALE BARRIER INLET PROTECTION INSTALLATION NOTES

1. SEE STRAW BALE DESIGN DETAIL FOR INSTALLATION REQUIREMENTS.

2. BALES SHALL BE PLACED IN A SINGLE ROW AROUND THE INLET WITH ENDS OF BALES TIGHTLY ABUTTING ONE ANOTHER.

SC-6 — Inlet Protection (IP)

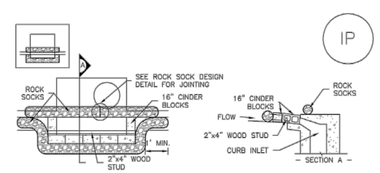

IP-1. BLOCK AND ROCK SOCK SUMP OR ON GRADE INLET PROTECTION

BLOCK AND CURB SOCK INLET PROTECTION INSTALLATION NOTES

1. SEE ROCK SOCK DESIGN DETAIL FOR INSTALLATION REQUIREMENTS.

2. CONCRETE "CINDER" BLOCKS SHALL BE LAID ON THEIR SIDES AROUND THE INLET IN A SINGLE ROW, ABUTTING ONE ANOTHER WITH THE OPEN END FACING AWAY FROM THE CURB.

3. GRAVEL BAGS SHALL BE PLACED AROUND CONCRETE BLOCKS, CLOSELY ABUTTING ONE ANOTHER AND JOINTED TOGETHER IN ACCORDANCE WITH ROCK SOCK DESIGN DETAIL.

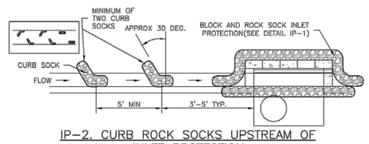

IP-2. CURB ROCK SOCKS UPSTREAM OF INLET PROTECTION

CURB ROCK SOCK INLET PROTECTION INSTALLATION NOTES

1. SEE ROCK SOCK DESIGN DETAIL INSTALLATION REQUIREMENTS.

2. PLACEMENT OF THE SOCK SHALL BE APPROXIMATELY 30 DEGREES FROM PERPENDICULAR IN THE OPPOSITE DIRECTION OF FLOW.

3. SOCKS ARE TO BE FLUSH WITH THE CURB AND SPACED A MINIMUM OF 5 FEET APART.

4. AT LEAST TWO CURB SOCKS IN SERIES ARE REQUIRED UPSTREAM OF ON-GRADE INLETS.

SC-6 — Inlet Protection (IP)

GENERAL INLET PROTECTION INSTALLATION NOTES

1. SEE PLAN VIEW FOR:
   –LOCATION OF INLET PROTECTION.
   –TYPE OF INLET PROTECTION (IP.1, IP.2, IP.3, IP.4, IP.5, IP.6)

2. INLET PROTECTION SHALL BE INSTALLED PROMPTLY AFTER INLET CONSTRUCTION OR PAVING IS COMPLETE (TYPICALLY WITHIN 48 HOURS). IF A RAINFALL/RUNOFF EVENT IS FORECAST, INSTALL INLET PROTECTION PRIOR TO ONSET OF EVENT.

3. MANY JURISDICTIONS HAVE BMP DETAILS THAT VARY FROM UDFCD STANDARD DETAILS. CONSULT WITH LOCAL JURISDICTIONS AS TO WHICH DETAIL SHOULD BE USED WHEN DIFFERENCES ARE NOTED.

INLET PROTECTION MAINTENANCE NOTES

1. INSPECT BMPs EACH WORKDAY, AND MAINTAIN THEM IN EFFECTIVE OPERATING CONDITION. MAINTENANCE OF BMPs SHOULD BE PROACTIVE, NOT REACTIVE. INSPECT BMPs AS SOON AS POSSIBLE (AND ALWAYS WITHIN 24 HOURS) FOLLOWING A STORM THAT CAUSES SURFACE EROSION, AND PERFORM NECESSARY MAINTENANCE.

2. FREQUENT OBSERVATIONS AND MAINTENANCE ARE NECESSARY TO MAINTAIN BMPs IN EFFECTIVE OPERATING CONDITION. INSPECTIONS AND CORRECTIVE MEASURES SHOULD BE DOCUMENTED THOROUGHLY.

3. WHERE BMPs HAVE FAILED, REPAIR OR REPLACEMENT SHOULD BE INITIATED UPON DISCOVERY OF THE FAILURE.

4. SEDIMENT ACCUMULATED UPSTREAM OF INLET PROTECTION SHALL BE REMOVED AS NECESSARY TO MAINTAIN BMP EFFECTIVENESS, TYPICALLY WHEN STORAGE VOLUME REACHES 50% OF CAPACITY, A DEPTH OF 6" WHEN SILT FENCE IS USED, OR ¼ OF THE HEIGHT FOR STRAW BALES.

5. INLET PROTECTION IS TO REMAIN IN PLACE UNTIL THE UPSTREAM DISTURBED AREA IS PERMANENTLY STABILIZED, UNLESS THE LOCAL JURISDICTION APPROVES EARLIER REMOVAL OF INLET PROTECTION IN STREETS.

6. WHEN INLET PROTECTION AT AREA INLETS IS REMOVED, THE DISTURBED AREA SHALL BE COVERED WITH TOP SOIL, SEEDED AND MULCHED, OR OTHERWISE STABILIZED IN A MANNER APPROVED BY THE LOCAL JURISDICTION.

(DETAIL ADAPTED FROM TOWN OF PARKER, COLORADO AND CITY OF AURORA, COLORADO, NOT AVAILABLE IN AUTOCAD)

NOTE: MANY JURISDICTIONS HAVE BMP DETAILS THAT VARY FROM UDFCD STANDARD DETAILS. CONSULT WITH LOCAL JURISDICTIONS AS TO WHICH DETAIL SHOULD BE USED WHEN DIFFERENCES ARE NOTED.

NOTE: THE DETAILS INCLUDED WITH THIS FACT SHEET SHOW COMMONLY USED, CONVENTIONAL METHODS OF INLET PROTECTION IN THE DENVER METROPOLITAN AREA. THERE ARE MANY PROPRIETARY INLET PROTECTION METHODS ON THE MARKET. UDFCD NEITHER ENDORSES NOR DISCOURAGES USE OF PROPRIETARY INLET PROTECTION; HOWEVER, IN THE EVENT PROPRIETARY METHODS ARE USED, THE APPROPRIATE DETAIL FROM THE MANUFACTURER MUST BE INCLUDED IN THE SWMP AND THE BMP MUST BE INSTALLED AND MAINTAINED AS SHOWN IN THE MANUFACTURER'S DETAILS.

NOTE: SOME MUNICIPALITIES DISCOURAGE OR PROHIBIT THE USE OF STRAW BALES FOR INLET PROTECTION. CHECK WITH LOCAL JURISDICTION TO DETERMINE IF STRAW BALE INLET PROTECTION IS ACCEPTABLE.

811 Know what's below. Call before you dig.

CALL 811 SEVENTY-TWO HOURS PRIOR TO DIGGING, GRADING OR EXCAVATING FOR THE MARKING OF UNDERGROUND MEMBER UTILITIES

CITY APPROVAL STAMP:

OLSSON ASSOCIATES
4690 Table Mountain Drive Suite 200 Golden, CO 80403
TEL 303.237.2072 FAX 303.237.2659
CA # 012-1417 www.olssonassociates.com

COLORADO LICENSED PROF. ENGINEER 06/20/14 42161 PROFESSIONAL ENGINEER

Kum & Go
6400 Westown Parkway
West Des Moines, Iowa
50266
P: 515-226-0128
F: 515-223-9873

#943 - BOULDER, COLORADO
3365 DIAGONAL HWY.

EROSION CONTROL DETAILS

KG PROJECT TEAM:
RDR: JXH
SDM: RJH
CPM: TLK

△	DATE	REVISION DESCRIPTION

REVISIONS

DATE: 06-20-2014

SHEET NUMBER: C2.3
08 OF 32

DOCUMENT REVISION DATE AUGUST 2012
DWG: F:\Projects\012-1417_LDVP\Final_Plans\121417_ERC02.dwg USER: sbower
DATE: Jul 01, 2014 2:42pm XREFS: 121417_TBLK_CD

Sediment Basin (SB) SC-7

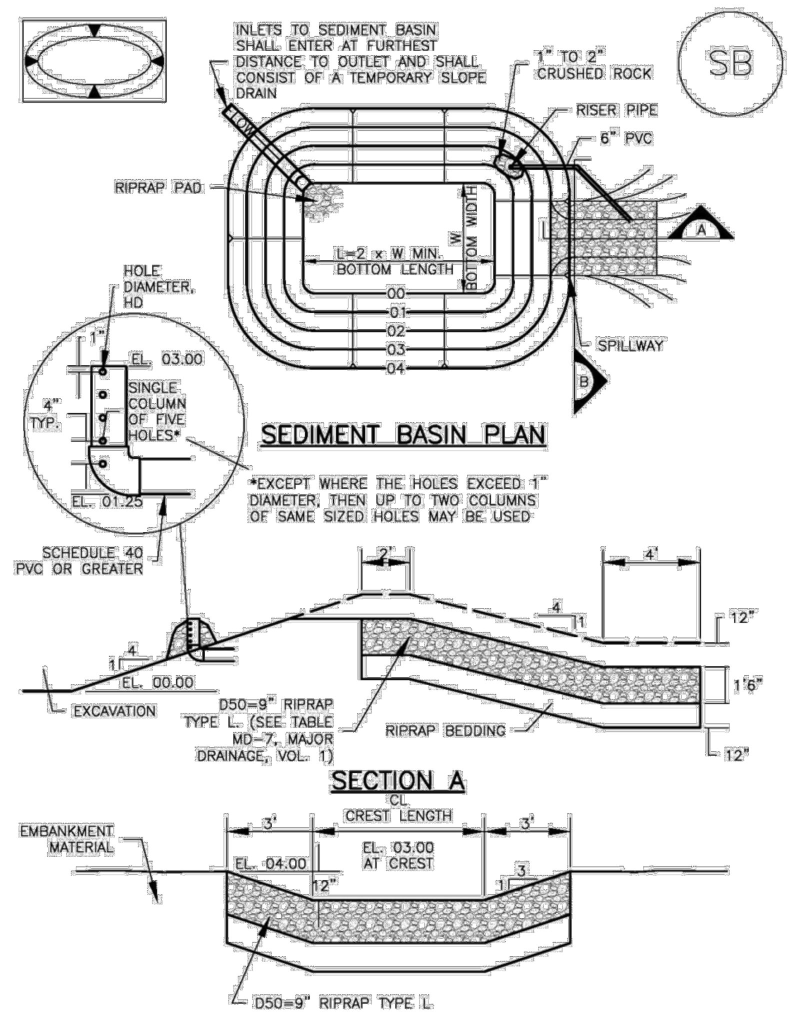

SC-7 Sediment Basin (SB)

TABLE SB-1. SIZING INFORMATION FOR STANDARD SEDIMENT BASIN			
Upstream Drainage Area (rounded to nearest acre), (ac)	Basin Bottom Width (W), (ft)	Spillway Crest Length (CL), (ft)	Hole Diameter (HD), (in)
1	12 ½	2	9/32
2	21	3	13/16
3	28	5	½
4	33 ½	6	9/16
5	38 ½	8	21/32
6	43	9	21/32
7	47 ¼	11	25/32
8	51	12	27/32
9	55	13	7/8
10	58 ¼	15	15/16
11	61	16	31/32
12	64	18	1
13	67 ½	19	1 1/16
14	70 ½	21	1 ⅛
15	73 ¼	22	1 3/16

SEDIMENT BASIN INSTALLATION NOTES

1. SEE PLAN VIEW FOR:
   - –LOCATION OF SEDIMENT BASIN.
   - –TYPE OF BASIN (STANDARD BASIN OR NONSTANDARD BASIN).
   - –FOR STANDARD BASIN, BOTTOM WIDTH W, CREST LENGTH CL, AND HOLE DIAMETER, HD.
   - –FOR NONSTANDARD BASIN, SEE CONSTRUCTION DRAWINGS FOR DESIGN OF BASIN INCLUDING RISER HEIGHT H, NUMBER OF COLUMNS N, HOLE DIAMETER HD AND PIPE DIAMETER D.
2. FOR STANDARD BASIN, BOTTOM DIMENSION MAY BE MODIFIED AS LONG AS BOTTOM AREA IS NOT REDUCED.
3. SEDIMENT BASINS SHALL BE INSTALLED PRIOR TO ANY OTHER LAND–DISTURBING ACTIVITY THAT RELIES ON ON BASINS AS AS A STORMWATER CONTROL.
4. EMBANKMENT MATERIAL SHALL CONSIST OF SOIL FREE OF DEBRIS, ORGANIC MATERIAL, AND ROCKS OR CONCRETE GREATER THAN 3 INCHES AND SHALL HAVE A MINIMUM OF 15 PERCENT BY WEIGHT PASSING THE NO. 200 SIEVE.
5. EMBANKMENT MATERIAL SHALL BE COMPACTED TO AT LEAST 95 PERCENT OF MAXIMUM DENSITY IN ACCORDANCE WITH ASTM D698.
6. PIPE SCH 40 OR GREATER SHALL BE USED.
7. THE DETAILS SHOWN ON THESE SHEETS PERTAIN TO STANDARD SEDIMENT BASIN(S) FOR DRAINAGE AREAS LESS THAN 15 ACRES. SEE CONSTRUCTION DRAWINGS FOR EMBANKMENT, STORAGE VOLUME, SPILLWAY, OUTLET, AND OUTLET PROTECTION DETAILS FOR ANY SEDIMENT BASIN(S) THAT HAVE BEEN INDIVIDUALLY DESIGNED FOR DRAINAGE AREAS LARGER THAN 15 ACRES.

Sediment Basin (SB) SC-7

SEDIMENT BASIN MAINTENANCE NOTES

1. INSPECT BMPs EACH WORKDAY, AND MAINTAIN THEM IN EFFECTIVE OPERATING CONDITION. MAINTENANCE OF BMPs SHOULD BE PROACTIVE, NOT REACTIVE. INSPECT BMPs AS SOON AS POSSIBLE (AND ALWAYS WITHIN 24 HOURS) FOLLOWING A STORM THAT CAUSES SURFACE EROSION, AND PERFORM NECESSARY MAINTENANCE.
2. FREQUENT OBSERVATIONS AND MAINTENANCE ARE NECESSARY TO MAINTAIN BMPs IN EFFECTIVE OPERATING CONDITION. INSPECTIONS AND CORRECTIVE MEASURES SHOULD BE DOCUMENTED THOROUGHLY.
3. WHERE BMPs HAVE FAILED, REPAIR OR REPLACEMENT SHOULD BE INITIATED UPON DISCOVERY OF THE FAILURE.
4. SEDIMENT ACCUMULATED IN BASIN SHALL BE REMOVED AS NEEDED TO MAINTAIN BMP EFFECTIVENESS, TYPICALLY WHEN SEDIMENT DEPTH REACHES ONE FOOT (I.E., TWO FEET BELOW THE SPILLWAY CREST).
5. SEDIMENT BASINS ARE TO REMAIN IN PLACE UNTIL THE UPSTREAM DISTURBED AREA IS STABILIZED AND GRASS COVER IS ACCEPTED BY THE LOCAL JURISDICTION.
6. WHEN SEDIMENT BASINS ARE REMOVED, ALL DISTURBED AREAS SHALL BE COVERED WITH TOPSOIL, SEEDED AND MULCHED OR OTHERWISE STABILIZED AS APPROVED BY LOCAL JURISDICTION.

(DETAILS ADAPTED FROM DOUGLAS COUNTY, COLORADO)

NOTE: MANY JURISDICTIONS HAVE BMP DETAILS THAT VARY FROM UDFCD STANDARD DETAILS. CONSULT WITH LOCAL JURISDICTIONS AS TO WHICH DETAIL SHOULD BE USED WHEN DIFFERENCES ARE NOTED.

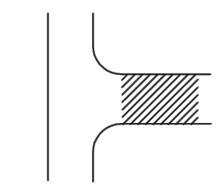

DEFINITION

A STONE STABILIZED PAD LOCATED AT POINTS OF VEHICULAR INGRESS AND EGRESS ON A CONSTRUCTION SITE

PURPOSE

TO REDUCE THE AMOUNT OF MUD TRANSPORTED ONTO PUBLIC ROADS BY MOTOR VEHICLES OR RUNOFF

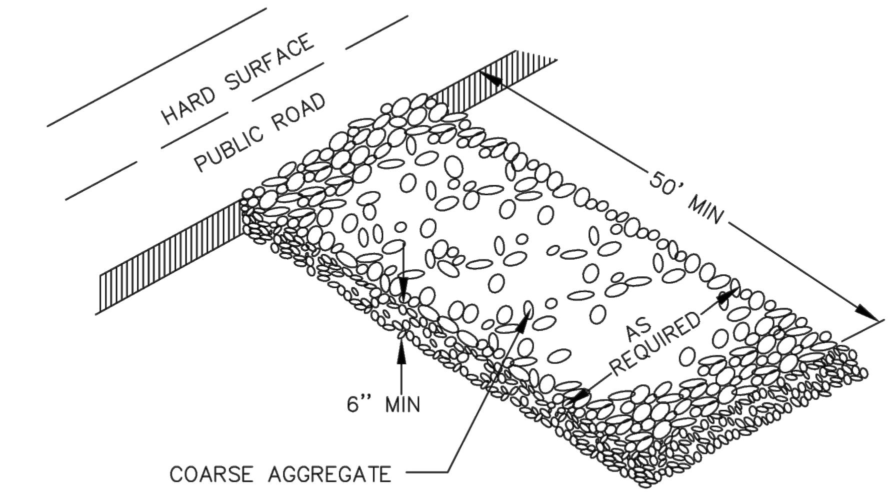

DRAWN BY: JSH CHECKED BY: RJH APPROVED BY: DIRECTOR OF PUBLIC WORKS	CITY OF BOULDER, COLORADO TEMPORARY GRAVEL CONSTRUCTION ENTRANCE	ISSUED: JULY 2, 1998 REVISED: OCT. 17, 2000 DRAWING NO. 7.30

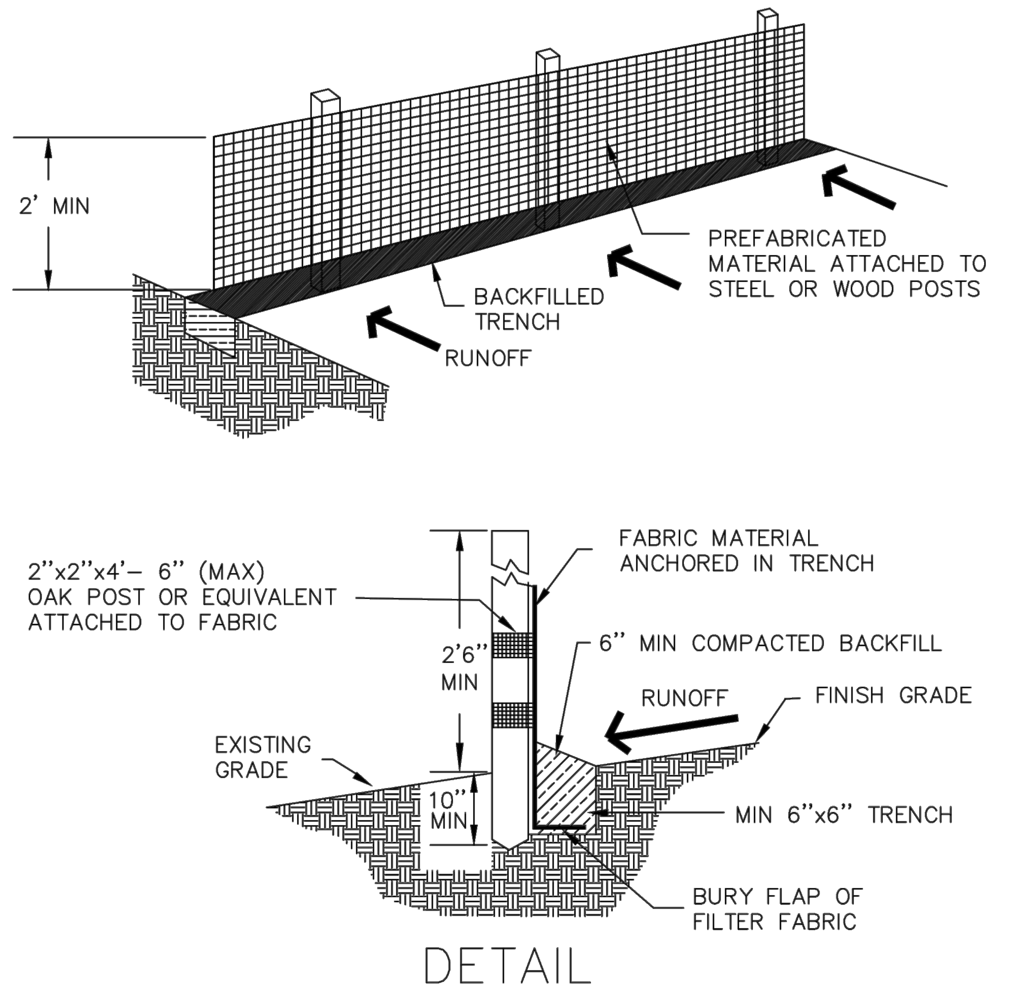

DETAIL

NOTES:

1. SILT FENCE SHALL BE INSTALLED BEFORE ANY EARTH REMOVAL OR EXCAVATION TAKES PLACE.
2. SET POSTS MAXIMUM 8 FEET ON CENTER AND EXCAVATE 6"x6" TRENCH UPSLOPE ALONG THE LINE OF POSTS.
3. ATTACH FILTER FABRIC TO POSTS AND EXTEND IT INTO TRENCH.
4. BACKFILL AND COMPACT EXCAVATED SOIL.

DRAWN BY: JSH CHECKED BY: RJH APPROVED BY: DIRECTOR OF PUBLIC WORKS	CITY OF BOULDER, COLORADO PREFABRICATED SILT FENCE INSTALLATION	ISSUED: JULY 2, 1998 REVISED: OCT. 17, 2000 DRAWING NO. 7.26

Temporary and Permanent Seeding (TS/PS) EC-2

Seeding dates for the highest success probability of perennial species along the Front Range are generally in the spring from April through early May and in the fall after the first of September until the ground freezes. If the area is irrigated, seeding may occur in summer months, as well. See Table TS/PS-3 for appropriate seeding dates.

Table TS/PS-1. Minimum Drill Seeding Rates for Various Temporary Annual Grasses

Species[a] (Common name)	Growth Season[b]	Pounds of Pure Live Seed (PLS)/acre[c]	Planting Depth (inches)
1. Oats	Cool	35 - 50	1 - 2
2. Spring wheat	Cool	25 - 35	1 - 2
3. Spring barley	Cool	25 - 35	1 - 2
4. Annual ryegrass	Cool	10 - 15	½
5. Millet	Warm	3 - 15	½ - ¾
6. Sudangrass	Warm	5–10	½ - ¾
7. Sorghum	Warm	5–10	½ - ¾
8. Winter wheat	Cool	20–35	1 - 2
9. Winter barley	Cool	20–35	1 - 2
10. Winter rye	Cool	20–35	1 - 2
11. Triticale	Cool	25–40	1 - 2

[a] Successful seeding of annual grass resulting in adequate plant growth will usually produce enough dead-plant residue to provide protection from wind and water erosion for an additional year. This assumes that the cover is not disturbed or mowed closer than 8 inches.

Hydraulic seeding may be substituted for drilling only where slopes are steeper than 3:1 or where access limitations exist. When hydraulic seeding is used, hydraulic mulching should be applied as a separate operation, when practical, to prevent the seeds from being encapsulated in the mulch.

[b] See Table TS/PS-3 for seeding dates. Irrigation, if consistently applied, may extend the use of cool season species during the summer months.

[c] Seeding rates should be doubled if seed is broadcast, or increased by 50 percent if done using a Brillion Drill or by hydraulic seeding.

SC-5 Rock Sock (RS)

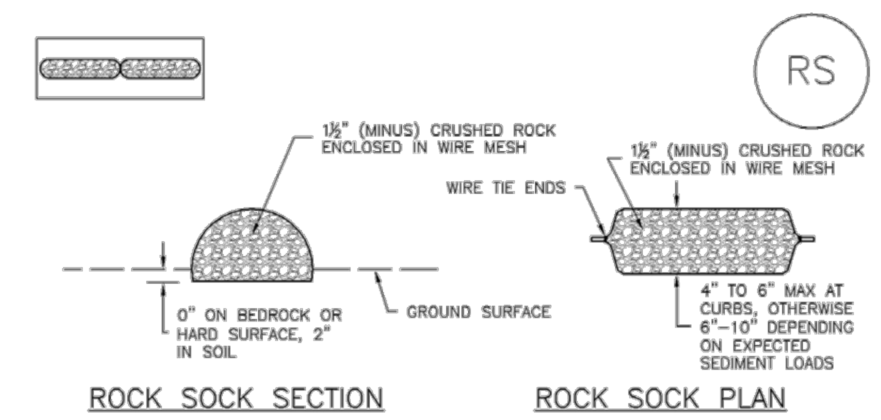

ANY GAP AT JOINT SHALL BE FILLED WITH AN ADEQUATE AMOUNT OF 1½" (MINUS) CRUSHED ROCK AND WRAPPED WITH ADDITIONAL WIRE MESH SECURED TO ENDS OF ROCK REINFORCED SOCK. AS AN ALTERNATIVE TO FILLING JOINTS BETWEEN ADJOINING ROCK SOCKS WITH CRUSHED ROCK AND ADDITIONAL WIRE WRAPPING, ROCK SOCKS CAN BE OVERLAPPED (TYPICALLY 12–INCH OVERLAP) TO AVOID GAPS.

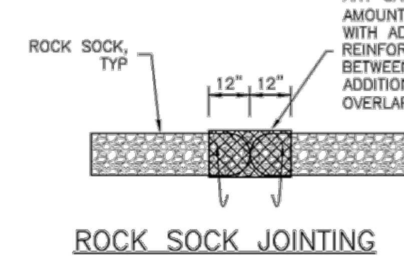

GRADATION TABLE	
SIEVE SIZE	MASS PERCENT PASSING SQUARE MESH SIEVES NO. 4
2"	100
1½"	90 – 100
1"	20 – 55
¾"	0 – 15
⅜"	0 – 5
MATCHES SPECIFICATIONS FOR NO. 4 COARSE AGGREGATE FOR CONCRETE PER AASHTO M43. ALL ROCK SHALL BE FRACTURED FACE, ALL SIDES.	

ROCK SOCK INSTALLATION NOTES

1. SEE PLAN VIEW FOR:
   - –LOCATION(S) OF ROCK SOCKS.
2. CRUSHED ROCK SHALL BE 1½" (MINUS) IN SIZE WITH A FRACTURED FACE (ALL SIDES) AND SHALL COMPLY WITH GRADATION SHOWN ON THIS SHEET (1½" MINUS).
3. WIRE MESH SHALL BE FABRICATED OF 10 GAGE POULTRY MESH, OR EQUIVALENT, WITH A MAXIMUM OPENING OF ½", RECOMMENDED MINIMUM ROLL WIDTH OF 48"
4. WIRE MESH SHALL BE SECURED USING "HOG RINGS" OR WIRE TIES AT 6" CENTERS ALONG ALL JOINTS AND AT 2" CENTERS ON ENDS OF SOCKS.
5. SOME MUNICIPALITIES MAY ALLOW THE USE OF FILTER FABRIC AS AN ALTERNATIVE TO WIRE MESH FOR THE ROCK ENCLOSURE.

RS–1. ROCK SOCK PERIMETER CONTROL

Know what's **below.** **Call** before you dig.

CALL 811 SEVENTY–TWO HOURS PRIOR TO DIGGING, GRADING OR EXCAVATING FOR THE MARKING OF UNDERGROUND MEMBER UTILITIES

CITY APPROVAL STAMP:

OLSSON ASSOCIATES
4690 Table Mountain Drive
Suite 200
Golden, CO 80403
TEL 303.237.2072 OA # 012-1417
FAX 303.237.2659 www.olssonassociates.com

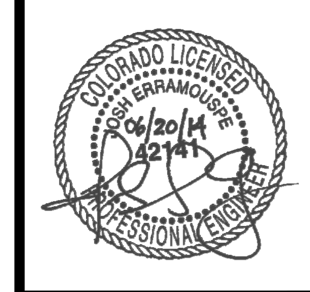

Kum & Go
6400 Westown Parkway
West Des Moines, Iowa
50266
P: 515-226-0128
F: 515-223-9873

#943 - BOULDER, COLORADO
3365 DIAGONAL HWY.

EROSION CONTROL DETAILS

KG PROJECT TEAM:
RDR: JXH
SDM: RJH
CPM: TLK

△	DATE	REVISION DESCRIPTION

REVISIONS

DATE: 06-20-2014

SHEET NUMBER:
C2.4

DWG: F:\Projects\012–1417_LDVP\Final_Plans\121417_ERC02.dwg USER: sbower
DATE: Jul 01, 2014 2:42pm XREFS: 121417_TBLK_CD

DOCUMENT REVISION DATE: AUGUST 2012

Stabilized Staging Area (SSA) SM-6

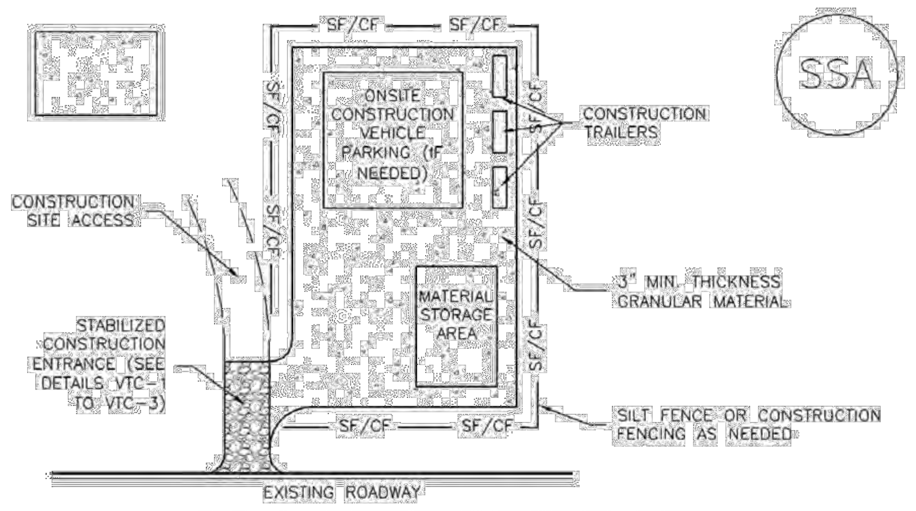

SSA-1. STABILIZED STAGING AREA

STABILIZED STAGING AREA INSTALLATION NOTES

1. SEE PLAN VIEW FOR:
   -LOCATION OF STAGING AREA(S).
   -CONTRACTOR MAY ADJUST LOCATION AND SIZE OF STAGING AREA WITH APPROVAL FROM THE LOCAL JURISDICTION.

2. STABILIZED STAGING AREA SHOULD BE APPROPRIATE FOR THE NEEDS OF THE SITE. OVERSIZING RESULTS IN A LARGER AREA TO STABILIZE FOLLOWING CONSTRUCTION.

3. STAGING AREA SHALL BE STABILIZED PRIOR TO OTHER OPERATIONS ON THE SITE.

4. THE STABILIZED STAGING AREA SHALL CONSIST OF A MINIMUM 3" THICK GRANULAR MATERIAL.

5. UNLESS OTHERWISE SPECIFIED BY LOCAL JURISDICTION, ROCK SHALL CONSIST OF DOT SECT. #703, AASHTO #3 COARSE AGGREGATE OR 6" (MINUS) ROCK.

6. ADDITIONAL PERIMETER BMPs MAY BE REQUIRED INCLUDING BUT NOT LIMITED TO SILT FENCE AND CONSTRUCTION FENCING.

STABILIZED STAGING AREA MAINTENANCE NOTES

1. INSPECT BMPs EACH WORKDAY, AND MAINTAIN THEM IN EFFECTIVE OPERATING CONDITION. MAINTENANCE OF BMPs SHOULD BE PROACTIVE, NOT REACTIVE. INSPECT BMPs AS SOON AS POSSIBLE (AND ALWAYS WITHIN 24 HOURS) FOLLOWING A STORM THAT CAUSES SURFACE EROSION, AND PERFORM NECESSARY MAINTENANCE.

2. FREQUENT OBSERVATIONS AND MAINTENANCE ARE NECESSARY TO MAINTAIN BMPs IN EFFECTIVE OPERATING CONDITION. INSPECTIONS AND CORRECTIVE MEASURES SHOULD BE DOCUMENTED THOROUGHLY.

3. WHERE BMPs HAVE FAILED, REPAIR OR REPLACEMENT SHOULD BE INITIATED UPON DISCOVERY OF THE FAILURE.

4. ROCK SHALL BE REAPPLIED OR REGRADED AS NECESSARY IF RUTTING OCCURS OR UNDERLYING SUBGRADE BECOMES EXPOSED.

SM-6 Stabilized Staging Area (SSA)

STABILIZED STAGING AREA MAINTENANCE NOTES

5. STABILIZED STAGING AREA SHALL BE ENLARGED IF NECESSARY TO CONTAIN PARKING, STORAGE, AND UNLOADING/LOADING OPERATIONS.

6. THE STABILIZED STAGING AREA SHALL BE REMOVED AT THE END OF CONSTRUCTION. THE GRANULAR MATERIAL SHALL BE REMOVED OR, IF APPROVED BY THE LOCAL JURISDICTION, USED ON SITE, AND THE AREA COVERED WITH TOPSOIL, SEEDED AND MULCHED OR OTHERWISE STABILIZED IN A MANNER APPROVED BY LOCAL JURISDICTION.

NOTE: MANY MUNICIPALITIES PROHIBIT THE USE OF RECYCLED CONCRETE AS GRANULAR MATERIAL FOR STABILIZED STAGING AREAS DUE TO DIFFICULTIES WITH RE-ESTABLISHMENT OF VEGETATION IN AREAS WHERE RECYCLED CONCRETE WAS PLACED.

NOTE: MANY JURISDICTIONS HAVE BMP DETAILS THAT VARY FROM UDFCD STANDARD DETAILS. CONSULT WITH LOCAL JURISDICTIONS AS TO WHICH DETAIL SHOULD BE USED WHEN DIFFERENCES ARE NOTED.

(DETAILS ADAPTED FROM DOUGLAS COUNTY, COLORADO, NOT AVAILABLE IN AUTOCAD)

Concrete Washout Area (CWA) MM-1

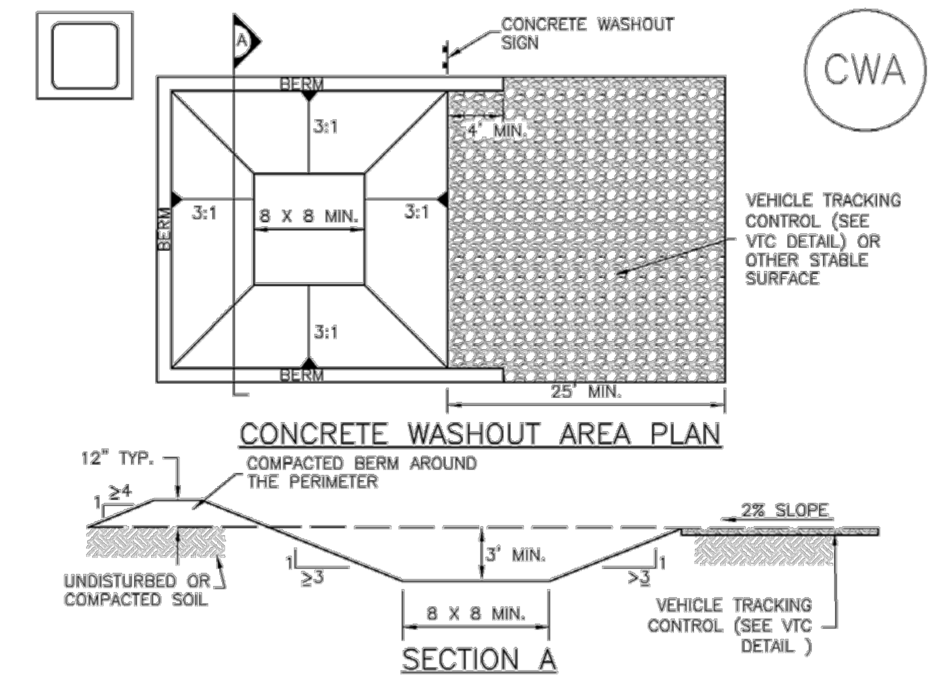

CWA-1. CONCRETE WASHOUT AREA

CWA INSTALLATION NOTES

1. SEE PLAN VIEW FOR:
   -CWA INSTALLATION LOCATION.

2. DO NOT LOCATE AN UNLINED CWA WITHIN 400' OF ANY NATURAL DRAINAGE PATHWAY OR WATERBODY. DO NOT LOCATE WITHIN 1,000' OF ANY WELLS OR DRINKING WATER SOURCES. IF SITE CONSTRAINTS MAKE THIS INFEASIBLE, OR IF HIGHLY PERMEABLE SOILS EXIST ON SITE, THE CWA MUST BE INSTALLED WITH AN IMPERMEABLE LINER (16 MIL MIN. THICKNESS) OR SURFACE STORAGE ALTERNATIVES USING PREFABRICATED CONCRETE WASHOUT DEVICES OR A LINED ABOVE GROUND STORAGE ARE SHOULD BE USED.

3. THE CWA SHALL BE INSTALLED PRIOR TO CONCRETE PLACEMENT ON SITE.

4. CWA SHALL INCLUDE A FLAT SUBSURFACE PIT THAT IS AT LEAST 8' BY 8' SLOPES LEADING OUT OF THE SUBSURFACE PIT SHALL BE 3:1 OR FLATTER. THE PIT SHALL BE AT LEAST 3' DEEP.

5. BERM SURROUNDING SIDES AND BACK OF THE CWA SHALL HAVE MINIMUM HEIGHT OF 1'.

6. VEHICLE TRACKING PAD SHALL BE SLOPED 2% TOWARDS THE CWA.

7. SIGNS SHALL BE PLACED AT THE CONSTRUCTION ENTRANCE, AT THE CWA, AND ELSEWHERE AS NECESSARY TO CLEARLY INDICATE THE LOCATION OF THE CWA TO OPERATORS OF CONCRETE TRUCKS AND PUMP RIGS.

8. USE EXCAVATED MATERIAL FOR PERIMETER BERM CONSTRUCTION.

MM-1 Concrete Washout Area (CWA)

CWA MAINTENANCE NOTES

1. INSPECT BMPs EACH WORKDAY, AND MAINTAIN THEM IN EFFECTIVE OPERATING CONDITION. MAINTENANCE OF BMPs SHOULD BE PROACTIVE, NOT REACTIVE. INSPECT BMPs AS SOON AS POSSIBLE (AND ALWAYS WITHIN 24 HOURS) FOLLOWING A STORM THAT CAUSES SURFACE EROSION, AND PERFORM NECESSARY MAINTENANCE.

2. FREQUENT OBSERVATIONS AND MAINTENANCE ARE NECESSARY TO MAINTAIN BMPs IN EFFECTIVE OPERATING CONDITION. INSPECTIONS AND CORRECTIVE MEASURES SHOULD BE DOCUMENTED THOROUGHLY.

3. WHERE BMPs HAVE FAILED, REPAIR OR REPLACEMENT SHOULD BE INITIATED UPON DISCOVERY OF THE FAILURE.

4. THE CWA SHALL BE REPAIRED, CLEANED, OR ENLARGED AS NECESSARY TO MAINTAIN CAPACITY FOR CONCRETE WASTE. CONCRETE MATERIALS, ACCUMULATED IN PIT, SHALL BE REMOVED ONCE THE MATERIALS HAVE REACHED A DEPTH OF 2'.

5. CONCRETE WASHOUT WATER, WASTED PIECES OF CONCRETE AND ALL OTHER DEBRIS IN THE SUBSURFACE PIT SHALL BE TRANSPORTED FROM THE JOB SITE IN A WATER-TIGHT CONTAINER AND DISPOSED OF PROPERLY.

6. THE CWA SHALL REMAIN IN PLACE UNTIL ALL CONCRETE FOR THE PROJECT IS PLACED.

7. WHEN THE CWA IS REMOVED, COVER THE DISTURBED AREA WITH TOP SOIL, SEED AND MULCH OR OTHERWISE STABILIZED IN A MANNER APPROVED BY THE LOCAL JURISDICTION.

(DETAIL ADAPTED FROM DOUGLAS COUNTY, COLORADO AND THE CITY OF PARKER, COLORADO, NOT AVAILABLE IN AUTOCAD).

NOTE: MANY JURISDICTIONS HAVE BMP DETAILS THAT VARY FROM UDFCD STANDARD DETAILS. CONSULT WITH LOCAL JURISDICTIONS AS TO WHICH DETAIL SHOULD BE USED WHEN DIFFERENCES ARE NOTED.

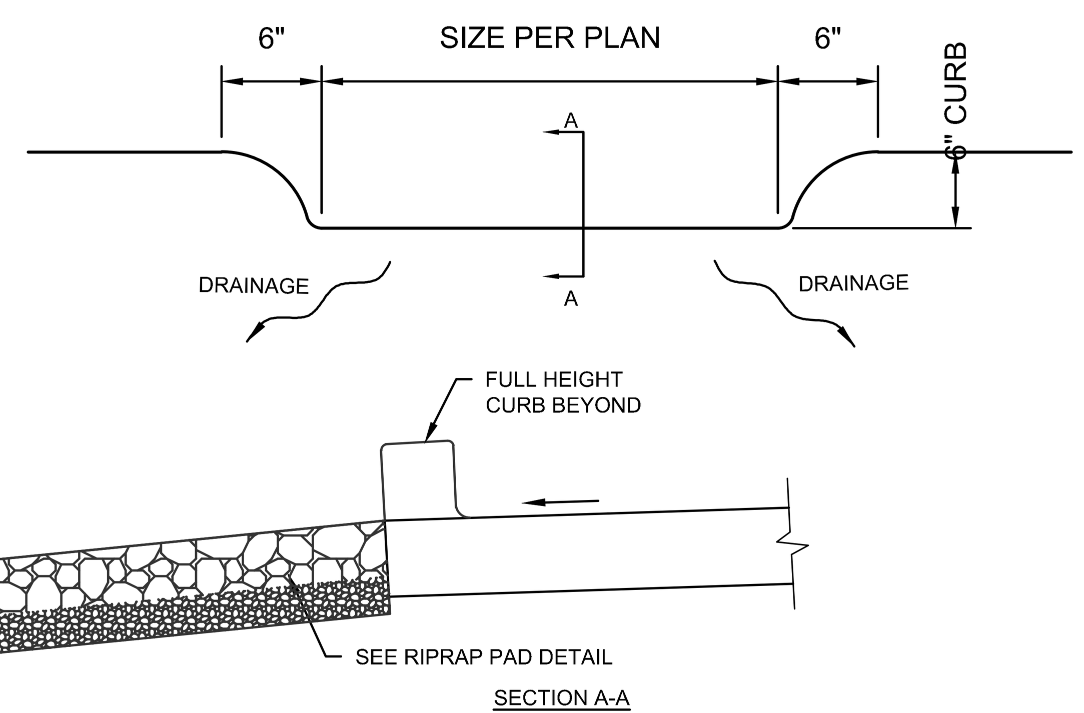

CURB OPENING DETAIL
NOT TO SCALE

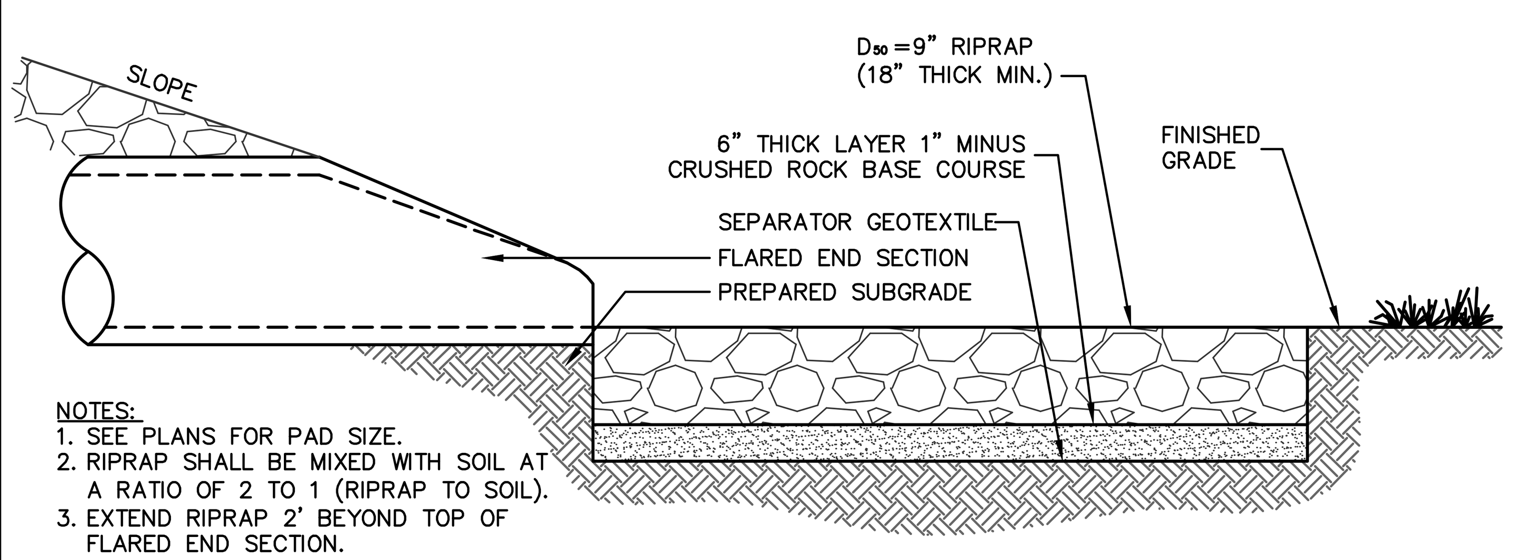

NOTES:
1. SEE PLANS FOR PAD SIZE.
2. RIPRAP SHALL BE MIXED WITH SOIL AT A RATIO OF 2 TO 1 (RIPRAP TO SOIL).
3. EXTEND RIPRAP 2' BEYOND TOP OF FLARED END SECTION.

RIPRAP OUTLET PROTECTION
NOT TO SCALE

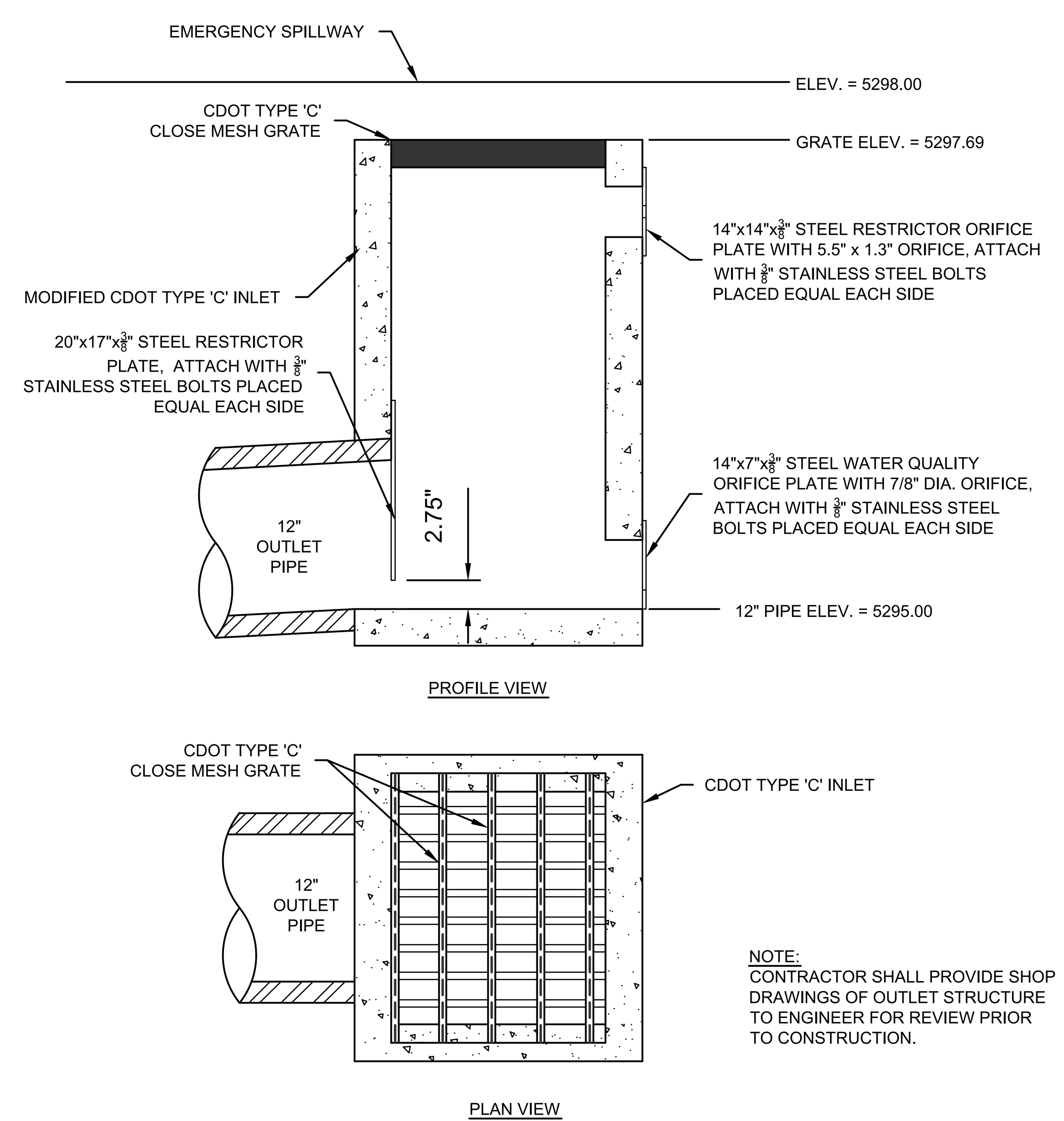

NOTE:
CONTRACTOR SHALL PROVIDE SHOP DRAWINGS OF OUTLET STRUCTURE TO ENGINEER FOR REVIEW PRIOR TO CONSTRUCTION.

DETENTION POND OUTLET STRUCTURE
NOT TO SCALE

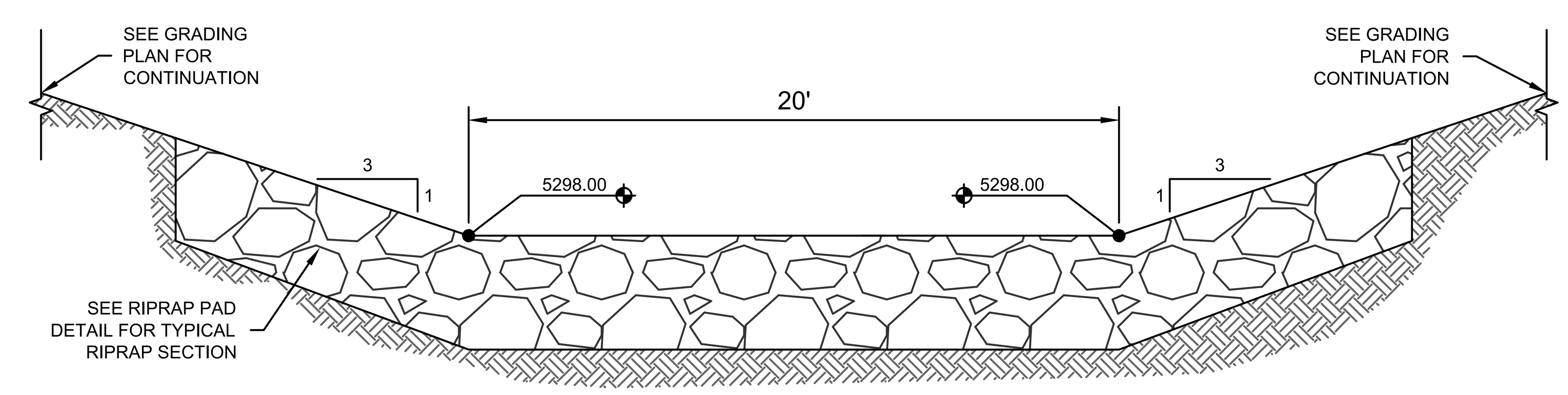

DETENTION POND SPILLWAY SECTION
NOT TO SCALE

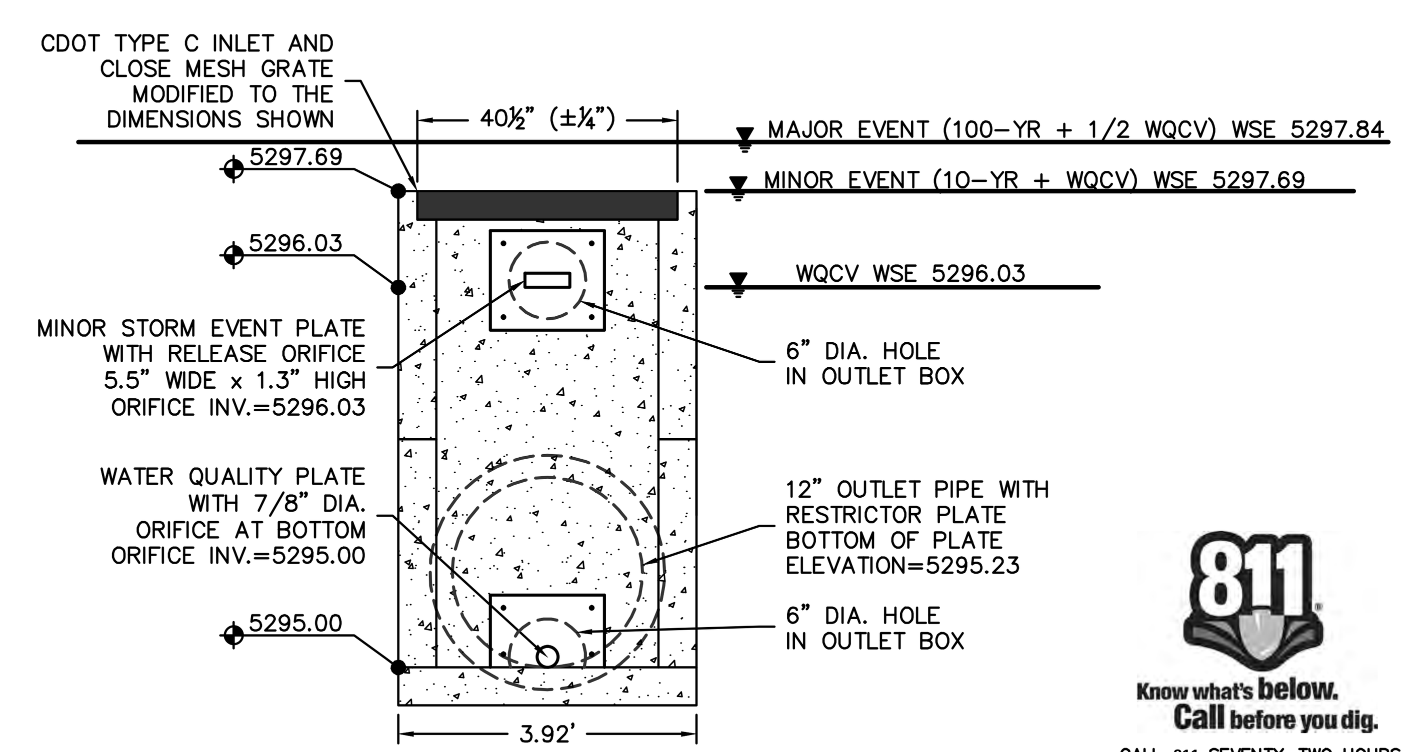

Know what's below. Call before you dig.
CALL 811 SEVENTY-TWO HOURS PRIOR TO DIGGING, GRADING OR EXCAVATING FOR THE MARKING OF UNDERGROUND MEMBER UTILITIES

CITY APPROVAL STAMP:

OLSSON ASSOCIATES
4690 Table Mountain Drive
Suite 200
Golden, CO 80403
TEL 303.237.2072
FAX 303.237.2659
OA # 012-1417
www.olssonassociates.com

COLORADO LICENSED PROFESSIONAL ENGINEER JOSH ERRAMOUSPE 42141 06/20/14

Kum & Go
6400 Westown Parkway
West Des Moines, Iowa
50266
P: 515-226-0128
F: 515-223-9873

#943 - BOULDER, COLORADO
3365 DIAGONAL HWY.
EROSION CONTROL DETAILS

KG PROJECT TEAM:
RDR: JXH
SDM: RJH
CPM: TLK

DATE	REVISION DESCRIPTION

REVISIONS

DATE: 06-20-2014
SHEET NUMBER: C2.5

DWG: F:\Projects\012-1417_LDVP\Final_Plans\121417_ERC02.dwg USER: sbower
DATE: Jul 01, 2014 2:57pm XREFS: 121417_TBLK_CD

WATER SERVICE FLAG NOTES

- W1 EXISTING 24" PVC WATER MAIN
- W2 PROPOSED WATER MAIN, SEE SHEET C3.2 FOR PLAN AND PROFILE
- W3 TAP WATER MAIN WITH 1" SERVICE SADDLE, (TAP BY CITY OF BOULDER PUBLIC WORKS), SEE DETAIL 5.16A, SHEET C5.4, N:1257832.94, E:3072506.22
- W4 INSTALL 27.6 LF OF 1" TYPE K COPPER IRRIGATION SERVICE LINE (4.5' MIN. COVER)
- W5 UTILITY CROSSING 8" SANITARY SEWER, TOP OF PIPE=5296.21, 1" IRRIGATION INV=5297.75 (MAINTAIN 18" VERTICAL SEPARATION)
- W6 INSTALL 1" IRRIGATION METER AND PIT, SEE DETAIL 5.16A, SHEET C5.4. N:1257833.10, E:3072533.80
- W7 TAP WATER MAIN WITH 1.5" SERVICE SADDLE, (TAP BY CITY OF BOULDER PUBLIC WORKS), SEE DETAIL 5.16A, SHEET C5.4, N:1257822.86, E:3072506.28
- W8 INSTALL 27.6 LF OF 1.5" TYPE K COPPER WATER SERVICE LINE (4.5' MIN. COVER)
- W9 UTILITY CROSSING 8" SANITARY SEWER, TOP OF PIPE=5296.06, 1.5" WATER SERVICE INV=5297.64 (MAINTAIN 18" VERTICAL SEPARATION)
- W10 INSTALL 1.5" DOMESTIC WATER METER AND PIT, SEE DETAIL 5.17A, SHEET C5.4. N:104818.59, E:256044.49
- W11 INSTALL 20.6 LF OF 2" TYPE K COPPER DOMESTIC WATER SERVICE LINE (4.5' MIN. COVER)
- W12 CONNECT TO 2" BUILDING DOMESTIC WATER SERVICE, (SEE MEP PLANS FOR CONNECTION DETAILS), N:1257823.15, E:3072554.47
- W13 INSTALL 8"X4" TEE WITH THRUST BLOCK (2 SF BEARING SURFACE), SEE DETAIL 5.13, SHEET C5.5, N:1257817.86, E:3072506.31
- W14 INSTALL 26.6 LF OF 4" D.I.P. FIRE SERVICE LINE (4.5' MIN. COVER)
- W15 UTILITY CROSSING 8" SANITARY SEWER TOP OF PIPE=5295.99, 4" FIRE SERVICE INV=5297.77 (MAINTAIN 18" VERTICAL SEPARATION)
- W16 INSTALL 4" GATE VALVE, PER CITY STANDARDS, RIM=5303.34, N:1257818.02, E:3072532.86
- W17 INSTALL 21.6 LF OF 4" D.I.P. FIRE SERVICE LINE (4.5' MIN. COVER)
- W18 CONNECT TO 4" BUILDING FIRE SERVICE, (SEE MEP PLANS FOR CONNECTION DETAILS), N:1257818.15, E:3072554.48
- W19 EXISTING FIRE HYDRANT, N:1257979.02, E:3072549.22
- W20 PROPOSED FIRE HYDRANT, SEE PROPOSED WATER MAIN PLAN AND PROFILE SHEET C3.2
- W21 TAP WATER MAIN WITH 1.5" SERVICE SADDLE, (TAP BY CITY OF BOULDER PUBLIC WORKS), SEE DETAIL 5.17A SHEET C5.4, N:1257659.93, E:3072553.29
- W22 INSTALL 25.0 LF OF 1.5" TYPE K COPPER WATER SERVICE LINE (4.5' MIN. COVER)
- W23 INSTALL 1.5" PLUG AND SERVICE TERMINATION, PER CITY STANDARDS. N:1257634.87, E:3072563.35
- W24 INSTALL 8"X4" TEE WITH THRUST BLOCK (2 SF BEARING SURFACE), SEE SHEET C5.5, N:125759.96, E:3072563.29
- W25 INSTALL 25.0 LF OF 4" D.I.P. FIRE SERVICE LINE (4.5' MIN. COVER)
- W26 INSTALL 4" PLUG AND SERVICE TERMINATION WITH THRUST BLOCK (2 SF BEARING SURFACE), PER CITY STANDARDS. N:1257634.87, E:3072563.35
- W27 PROPOSED FIRE DEPARTMENT CONNECTION

UTILITY FLAG NOTES

- U1 EXISTING OVERHEAD POWER, PROTECT IN PLACE
- U2 EXISTING OVERHEAD POWER POLE, PROTECT IN PLACE. N:1257905.52, E:3072549.76, AND N:1257907.59, E:3072927.50
- U3 PLACE EXISTING OVERHEAD POWER UNDERGROUND, COORDINATE WITH XCEL ENERGY
- U4 INSTALL PRIMARY UNDERGROUND POWER, COORDINATE WITH XCEL ENERGY
- U5 TRANSFORMER PAD TO BE EXCAVATED AND PREPARED BY CONTRACTOR; TRANSFORMER TO BE INSTALLED BY XCEL ENERGY, N;1257841.56, E:3072547.31
- U6 INSTALL SECONDARY UNDERGROUND POWER, COORDINATE WITH XCEL ENERGY
- U7 PROPOSED DRY UTILITY ENTRY LOCATION, COORDINATE WITH LOCAL UTILITY PROVIDERS, N:1257825.18, E:3072556.96
- U8 PROPOSED STORM SEWER SYSTEM, SEE SHEET C2.1
- U9 PROPOSED LIGHT POLE LOCATIONS, SEE MEP PLANS FOR LIGHTING ELECTRICAL PLAN
- U10 PROPOSED TANK OVERDIG LIMITS

SANITARY SEWER SERVICE FLAG NOTES

- S1 PROPOSED SANITARY SEWER MAIN, SEE SHEET C3.3 FOR PLAN AND PROFILE
- S2 CONNECT TO PROPOSED SANITARY SEWER MAIN WITH 6" FLEXIBLE SERVICE SADDLE, 6" INV=5293.19, (CONTRACTOR TO VERIFY PRIOR TO CONSTRUCTION), N:1257677.37, E:3072517.82
- S3 INSTALL 57.3 LF OF 6" PVC SDR 35 SANITARY SEWER SERVICE LINE @ 1.1%
- S4 INSTALL SANITARY CLEANOUT WITH WATERTIGHT AND TRAFFIC RATED LID, RIM=5303.04, 6" INV=5293.82, N:1257677.48, E:3072577.18
- S5 INSTALL 57.3 LF OF 6" PVC SDR 35 SANITARY SEWER SERVICE LINE @ 1.1%
- S6 INSTALL PVC WYE AND CLEANOUT WITH WATERTIGHT AND TRAFFIC RATED LID, RIM=5301.78, 6" INV=5294.45, N:1257677.60, E:3072634.50
- S7 INSTALL 51.7 LF OF 6" PVC SDR 35 SANITARY SEWER SERVICE LINE @ 1.1%
- S8 INSTALL 6" X 6" PVC WYE AND CLEANOUT WITH WATERTIGHT AND TRAFFIC RATED LID, RIM=5302.43, 6" INV=5295.02, N:1257729.29, E:3072634.50
- S9 INSTALL 19.2 LF OF 6" PVC SDR 35 SANITARY SEWER SERVICE LINE @ 11.9%
- S10 CONNECT TO 6" SANITARY SEWER SERVICE FROM BUILDING (SEE MEP PLANS FOR 2-WAY CLEANOUT AND CONNECTIONS), 6" INV=5297.30, N:1257729.23, E:3072615.32
- S11 INSTALL 61.2 LF OF 6" PVC SDR 35 SANITARY SEWER SERVICE LINE @ 1.1%
- S12 INSTALL SANITARY CLEANOUT WITH WATERTIGHT AND TRAFFIC RATED LID, RIM=5303.06, 6" INV=5295.69, N:1257790.45, E:3072634.50
- S13 INSTALL 61.2 LF OF 6" PVC SDR 35 SANITARY SEWER SERVICE LINE @ 1.1%
- S14 INSTALL 6" X 6" PVC WYE AND CLEANOUT WITH WATERTIGHT AND TRAFFIC RATED LID, RIM=5302.32, 6" INV=5296.37, N:1257851.60, E:3072634.50
- S15 INSTALL 38.8 LF OF 6" PVC SDR 35 SANITARY SEWER SERVICE LINE @ 1.1%
- S16 INSTALL 6" X 6" PVC WYE AND CLEANOUT WITH WATERTIGHT AND TRAFFIC RATED LID, RIM=5303.29, 6" INV=5296.79, N:1257851.60, E:3072595.75
- S17 INSTALL 7.2 LF OF 6" PVC SDR 35 SANITARY SEWER SERVICE LINE @ 2.0%
- S18 INSTALL 1000 GALLON GREASE INTERCEPTOR WITH SAMPLE PORT, WATERTIGHT AND TRAFFIC RATED LIDS, AND 2-WAY 6" CLEANOUTS AT INLET AND OUTLET OF INTERCEPTOR PER DETAIL ON SHEET C5.2, RIM=5303.76, 6" INV(IN)=5297.27, 6" INV(OUT)=5296.93, N:1257840.35, E:3072595.77
- S19 INSTALL 1.5 LF OF 6" PVC SDR 35 SANITARY SEWER SERVICE LINE @ 2.0%
- S20 CONNECT TO 6" SANITARY SEWER SERVICE FROM BUILDING (SEE MEP PLANS FOR 2-WAY CLEANOUT AND CONNECTIONS), 6" INV=5297.30, N:1257834.77, E:3072595.78
- S21 UTILITY CROSSING 6" SANITARY SEWER SERVICE (TOP OF PIPE=5295.06), 10" STORM SEWER INV=5298.41 (MAINTAIN 18" VERTICAL SEPARATION)
- S22 CONNECT TO PROPOSED SANITARY SEWER MAIN WITH 6" FLEXIBLE SERVICE SADDLE, 6" INV=5291.39, (CONTRACTOR TO VERIFY PRIOR TO CONSTRUCTION), N:1257545.43, E:3072518.61
- S23 INSTALL 26.4 LF OF 4" PVC SDR 35 SANITARY SEWER SERVICE LINE @ 2.1%
- S24 INSTALL 4" SANITARY SERVICE PLUG, N:1257545.57, E:3072545.03; 4" INV=5291.94

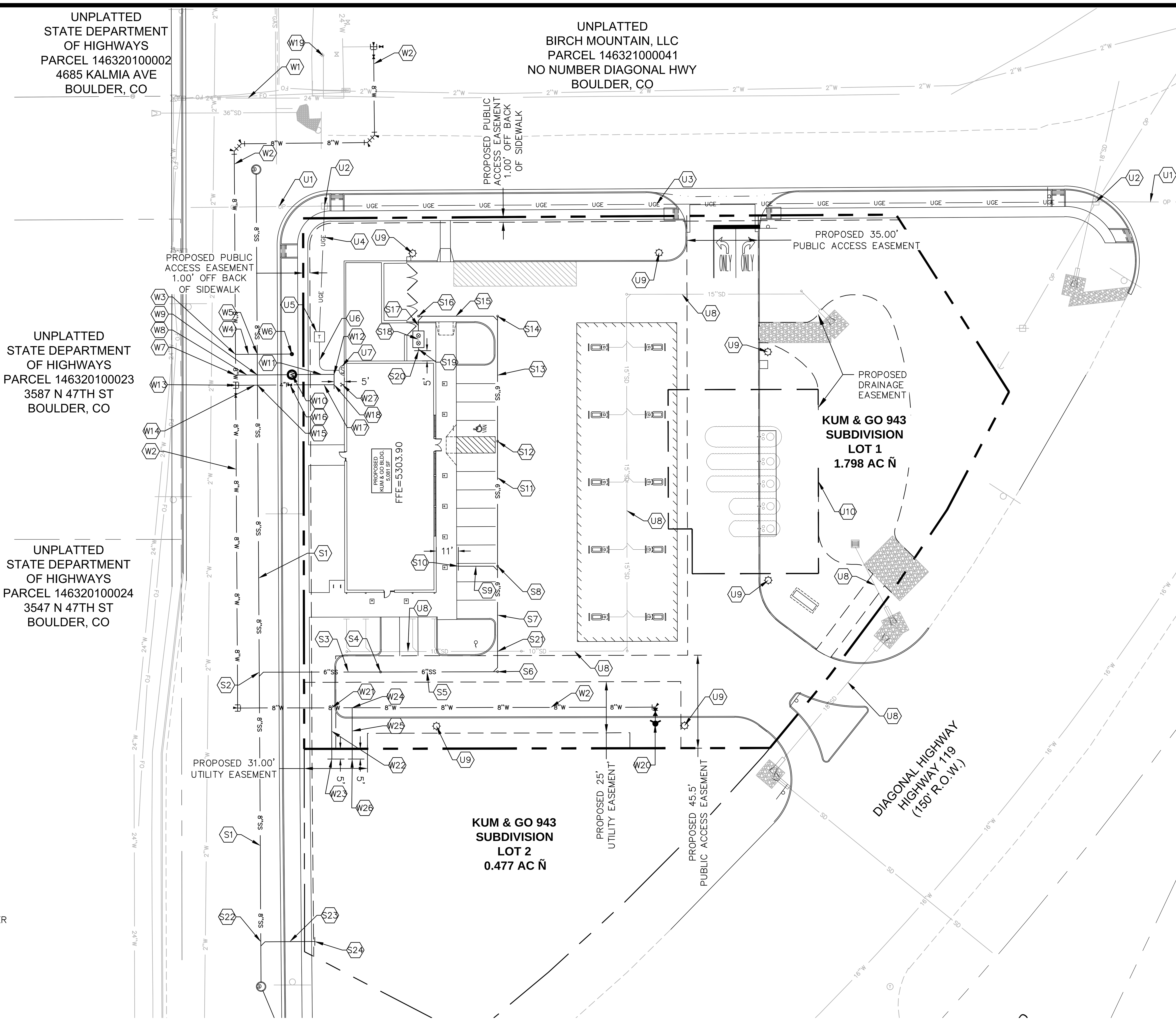

LEGEND

- PROPERTY LINE
- PROPOSED BOUNDARY LINE
- PROPOSED EASEMENT LINE
- EXISTING EDGE OF ASPHALT
- PROPOSED CONCRETE CURB AND GUTTER
- OP — EXISTING OVERHEAD POWER
- SD — STORM SEWER
- SS — PROPOSED SANITARY SEWER
- UGE — PROPOSED UNDERGROUND POWER
- W — EXISTING WATER LINE
- W — PROPOSED WATER LINE
- FO — EXISTING FIBER OPTIC LINE
- LIGHT POLE
- TRANSFORMER
- ELECTRIC VAULT
- SIGN
- BOLLARD
- BENCHMARK/CONTROL POINT
- POWER POLE
- GUY WIRE
- TELEPHONE PEDESTAL
- TELEPHONE RISER
- TELEPHONE MANHOLE
- TRAFFIC SIGNAL BOX
- TRAFFIC SIGNAL POLE
- STORM SEWER MANHOLE
- EXISTING CURB INLET
- FIRE HYDRANT
- WATER VALVE
- WATER METER
- EXISTING DECIDUOUS TREE
- CLEANOUT
- GREASE INTERCEPTOR LID
- SANITARY SEWER MANHOLE
- FLARED END SECTION
- RIPRAP

BASIS OF BEARINGS:

BEARINGS ARE BASED ON THE WEST LINE OF THE NW1/4 OF SECTION 21 AS HAVING A BEARING OF N00°06'56"W FROM THE W1/4 CORNER BEING MONUMENTED WITH A 3" ALUMINUM CAP TO THE W-N1/16 CORNER BEING ALSO MONUMENTED WITH A 3" ALUMINUM CAP AS SHOWN HEREON.

BENCHMARKS:

1. PROJECT BENCHMARK: THE PUBLISHED VALUES OF BOULDER COUNTY PRIMARY MONUMENT CONTROL STATION "B 322 RESET". EL=5508.90' (NAVD88), N:1272428.69, E:3061900.56
2. SITE BENCHMARK: 3" ALUMINUM CAP LOCATED IN THE INTERSECTION OF 47TH STREET AND INDEPENDENCE ROAD. EL=5304.38' (NAVD88), N:1257929.36, E:3072507.66

NOTES:

1. SEE GRADING PLAN, SHEET C2.1, FOR EXISTING AND PROPOSED SURFACES.
2. SEE DEMOLITION PLAN, SHEET 1.4, FOR LOCATION OF ALL EXISTING STRUCTURES, AND TREES.
3. SEE SITE PLAN, SHEET C1.2, FOR LOCATION OF ALL PROPOSED STRUCTURES.
4. SEE LANDSCAPE PLAN, SHEET L1.1, FOR LOCATION OF ALL PROPOSED LANDSCAPING.
5. UTILITY CONSTRUCTION AND MATERIALS SHALL COMPLY WITH THE CITY OF BOULDER DESIGN AND CONSTRUCTION STANDARDS.

NOTE:
THE UNDERGROUND UTILITIES SHOWN HAVE BEEN LOCATED FROM FIELD SURVEY INFORMATION AND EXISTING DRAWINGS. THE ENGINEER/SURVEYOR MAKES NO GUARANTEES THAT THE UTILITIES SHOWN COMPRISE ALL SUCH UTILITIES IN THE AREA, EITHER IN-SERVICE OR ABANDONED. THE ENGINEER/SURVEYOR FURTHER DOES NOT WARRANT THAT THE UTILITIES SHOWN ARE IN THE EXACT LOCATION INDICATED, THE ENGINEER/SURVEYOR HAS NOT PHYSICALLY LOCATED THE UNDERGROUND UTILITIES. THIS INCLUDES PRIVATE AND PUBLIC UTILITIES.

N W E S

1" = 30'
0' 15' 30' 60'
SCALE IN FEET

Know what's below. Call before you dig.
CALL 811 SEVENTY-TWO HOURS PRIOR TO DIGGING, GRADING OR EXCAVATING FOR THE MARKING OF UNDERGROUND MEMBER UTILITIES

CITY APPROVAL STAMP:

OLSSON ASSOCIATES
4690 Table Mountain Drive
Suite 200
Golden, CO 80403
TEL 303.237.2072
FAX 303.237.2659
OA # 012-1417
www.olssonassociates.com

COLORADO LICENSED PROFESSIONAL ENGINEER JOSH ERRAMOUSPE 42141 06/20/14

Kum & Go

6400 Westown Parkway
West Des Moines, Iowa
50266
P: 515-226-0128
F: 515-223-9873

#943 - BOULDER, COLORADO
3365 DIAGONAL HWY.
UTILITY PLAN

KG PROJECT TEAM:
RDR: JXH
SDM: RJH
CPM: TLK

REVISION DESCRIPTION	DATE	△

REVISIONS

DATE: 06-20-2014

SHEET NUMBER:
C3.1

DWG: F:\Projects\012-1417_LDVP\Final_Plans\121417_UTIL.dwg USER: sbower
DATE: Jul 01, 2014 2:42pm XREFS: 121417_PUTIL 121417_XBASE 121417_PBASE 121417_TBLK_CD
DOCUMENT REVISION DATE: AUGUST 2012

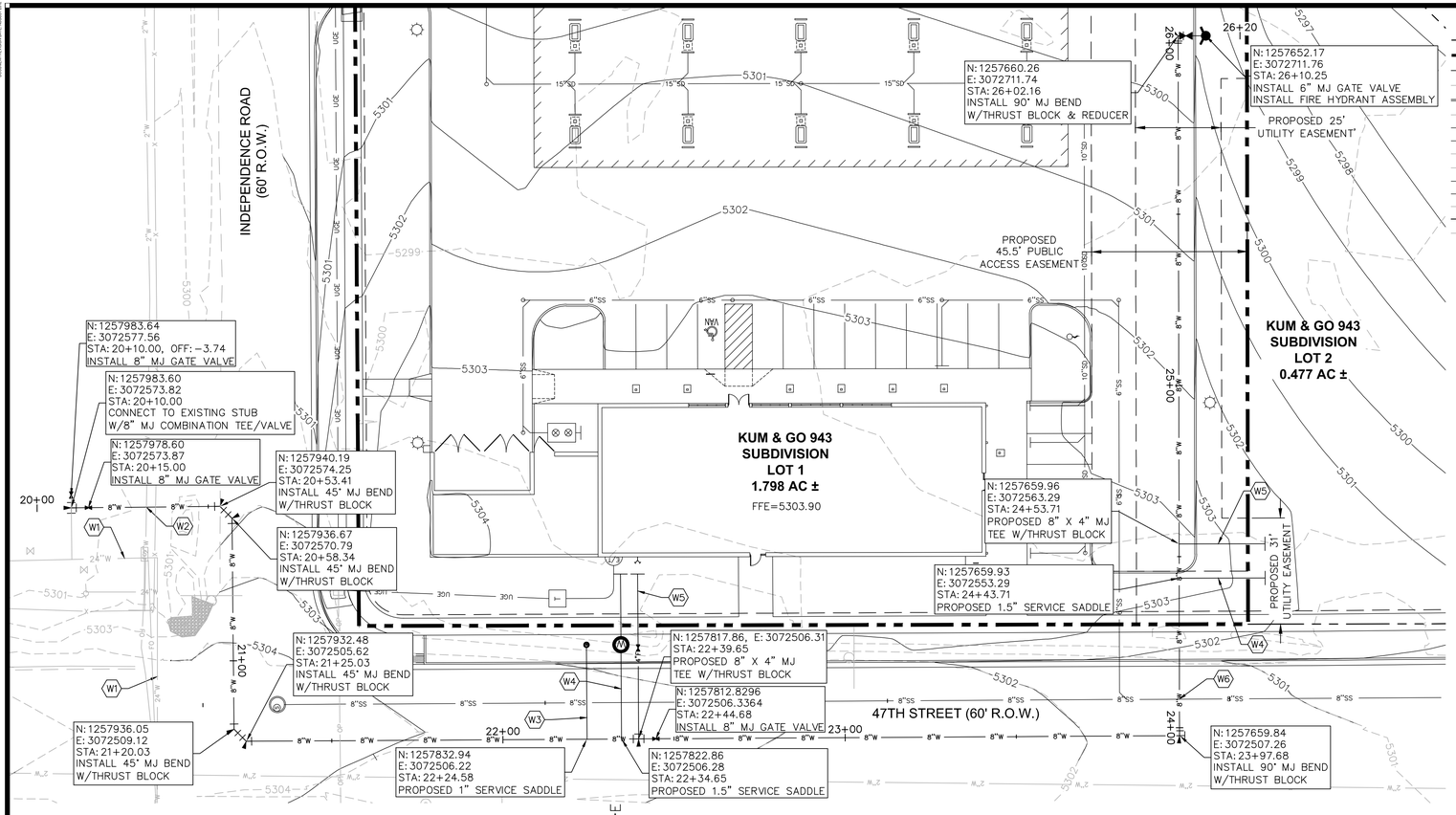

PLAN VIEW
SCALE: 1"=20'

LEGEND

- PROPERTY LINE
- BOUNDARY LINE
- PROPOSED EASEMENT LINE
- EXISTING EDGE OF ASPHALT
- PROPOSED CONCRETE CURB AND GUTTER
- 5300 EXISTING CONTOUR
- 5300 PROPOSED MAJOR CONTOUR
- 5301 PROPOSED MINOR CONTOUR
- SD STORM SEWER
- SS EXISTING SANITARY SEWER
- SS PROPOSED SANITARY SEWER
- UGE PROPOSED UNDERGROUND POWER
- W EXISTING WATER LINE
- W PROPOSED WATER LINE
- FO EXISTING FIBER OPTIC LINE
- LIGHT POLE
- T TRANSFORMER
- SIGN
- BENCHMARK/CONTROL POINT
- POWER POLE
- EXISTING CURB INLET
- FIRE HYDRANT
- WATER VALVE
- WATER METER
- CLEANOUT
- GREASE INTERCEPTOR LID
- SANITARY SEWER MANHOLE

FLAG NOTES:

- W1 EXISTING 24" PVC WATER MAIN
- W2 UTILITY CROSSING 8" WATER MAIN WITH EXISTING 2" WATER SERVICE SERVICE, (MAINTAIN 18" VERTICAL SEPARATION), N:104829.92, E: 256047.84
- W3 PROPOSED 1" TYPE K COPPER IRRIGATION SERVICE LINE, SEE SHEET C3.1
- W4 PROPOSED 1.5" TYPE K COPPER WATER SERVICE LINE, SEE SHEET C3.1
- W5 PROPOSED 4" D.I.P. FIRE SERVICE LINE, SEE SHEET C3.1
- W6 UTILITY CROSSING 8" WATER MAIN INV=5295.83, 8" SANITARY SEWER TOP OF PIPE=5293.60 (MAINTAIN 18" VERTICAL SEPARATION)

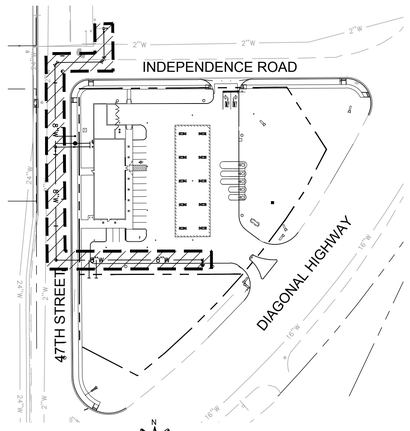

KEY MAP
SCALE: 1"=100'

NOTES:

1. SEE SHEETS C5.4–C5.5 FOR WATER MAIN DETAILS.
2. UTILITY CONSTRUCTION AND MATERIALS SHALL COMPLY WITH THE CITY OF BOULDER DESIGN AND CONSTRUCTION STANDARDS.

BENCHMARKS:

1. PROJECT BENCHMARK: THE PUBLISHED VALUES OF BOULDER COUNTY PRIMARY MONUMENT CONTROL STATION "B 322 RESET". EL=5508.90' (NAVD88), N:1272428.69, E:3061900.56
2. SITE BENCHMARK: 3" ALUMINUM CAP LOCATED IN THE INTERSECTION OF 47TH STREET AND INDEPENDENCE ROAD. EL=5304.38' (NAVD88), N:1257929.36, E:3072507.66

BASIS OF BEARINGS:

BEARINGS ARE BASED ON THE WEST LINE OF THE NW1/4 OF SECTION 21 AS HAVING A BEARING OF N00°06'56"W FROM THE W1/4 CORNER BEING MONUMENTED WITH A 3" ALUMINUM CAP TO THE W-N1/16 CORNER BEING ALSO MONUMENTED WITH A 3" ALUMINUM CAP AS SHOWN HEREON.

FLOOD ZONE:

THE SUBJECT PROPERTY FALLS WITHIN ZONE "X" DESCRIBED AS AREAS DETERMINED TO BE OUTSIDE THE 500-YEAR FLOODPLAIN; ACCORDING TO FEMA FLOOD INSURANCE RATE MAP 08013C0415F WITH AN EFFECTIVE DATE OF JUNE 2, 1995.

NOTE:

THE UNDERGROUND UTILITIES SHOWN HAVE BEEN LOCATED FROM FIELD SURVEY INFORMATION AND EXISTING DRAWINGS. THE ENGINEER/SURVEYOR MAKES NO GUARANTEES THAT THE UTILITIES SHOWN COMPRISE ALL SUCH UTILITIES IN THE AREA, EITHER IN-SERVICE OR ABANDONED. THE ENGINEER/SURVEYOR FURTHER DOES NOT WARRANT THAT THE UTILITIES SHOWN ARE IN THE EXACT LOCATION INDICATED, THE ENGINEER/SURVEYOR HAS NOT PHYSICALLY LOCATED THE UNDERGROUND UTILITIES. THIS INCLUDES PRIVATE AND PUBLIC UTILITIES.

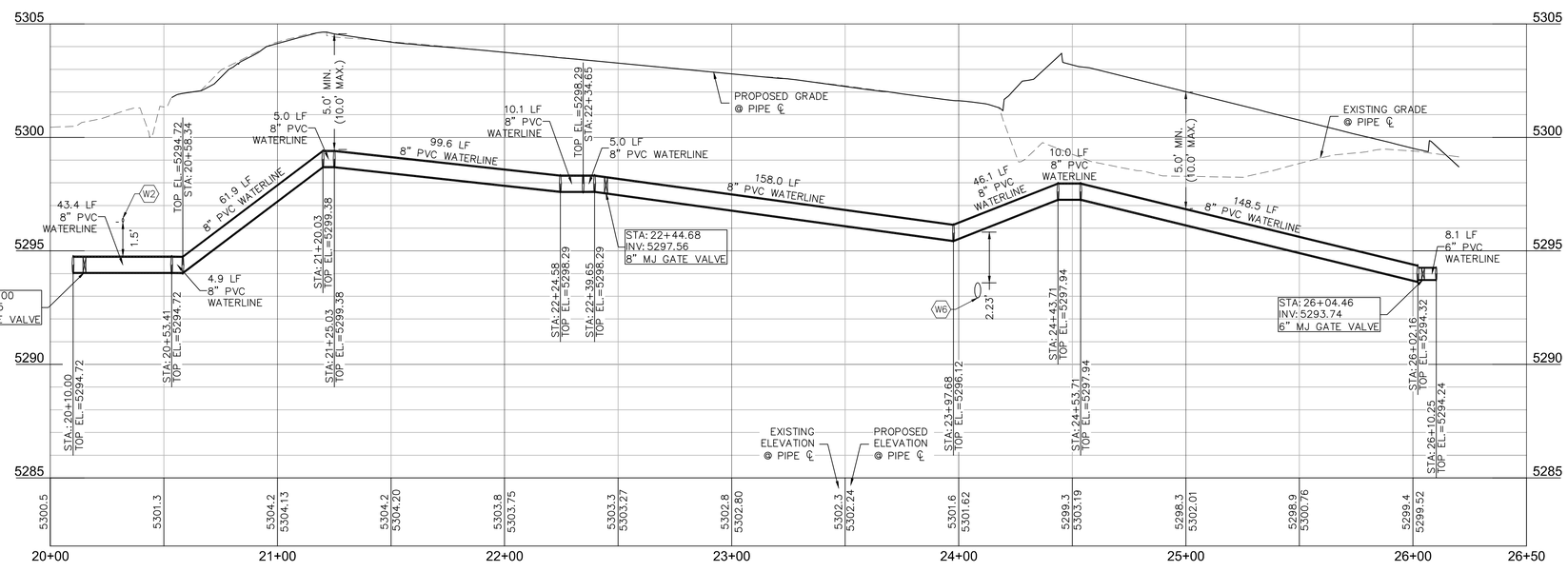

PROFILE VIEW
HORIZONTAL SCALE: 1"=30'
VERTICAL SCALE: 1"=3'

CITY APPROVAL STAMP:

Know what's below. Call before you dig.
CALL 811 SEVENTY-TWO HOURS PRIOR TO DIGGING, GRADING OR EXCAVATING FOR THE MARKING OF UNDERGROUND MEMBER UTILITIES

OLSSON ASSOCIATES
4690 Table Mountain Drive Suite 200 Golden, CO 80403
TEL 303.237.2072 FAX 303.237.2659
OA # 012-1417
www.olssonassociates.com

COLORADO LICENSED PROFESSIONAL ENGINEER JOSE EGRAMONTE 06/20/14 42161

Kum & Go
6400 Westown Parkway
West Des Moines, Iowa
50266
P: 515-226-0128
F: 515-223-9873

#943 - BOULDER, COLORADO
3365 DIAGONAL HWY.

WATER MAIN EXTENSION PLAN

KG PROJECT TEAM:
RDR: JXH
SDM: RJH
CPM: TLK

△	DATE	REVISION DESCRIPTION

REVISIONS

DATE: 06-20-2014

SHEET NUMBER: C3.2
12 OF 32

DWG: F:\Projects\012-1417_LDVP\Final_Plans\121417_WAT.dwg USER: sbower
DATE: Jul 01, 2014 2:43pm XREFS: 121417_PBASE 121417_TBLK_CD 121417_XBASE 121417_PUTIL
DOCUMENT REVISION DATE AUGUST 2012

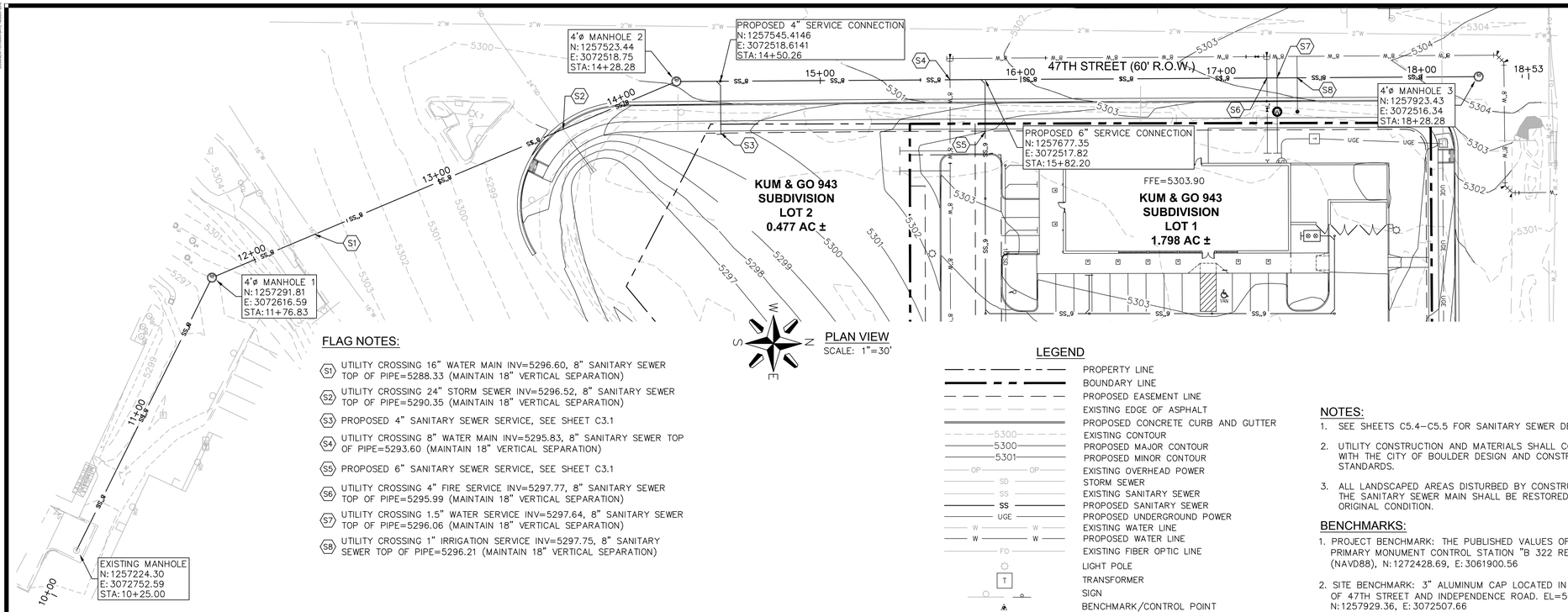

PLAN VIEW
SCALE: 1"=30'

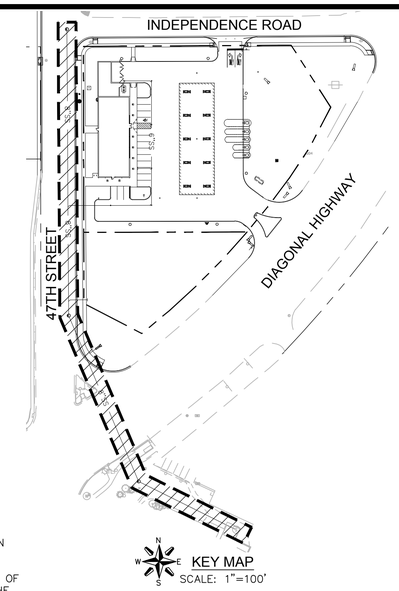

KEY MAP
SCALE: 1"=100'

FLAG NOTES:

- S1 UTILITY CROSSING 16" WATER MAIN INV=5296.60, 8" SANITARY SEWER TOP OF PIPE=5288.33 (MAINTAIN 18" VERTICAL SEPARATION)
- S2 UTILITY CROSSING 24" STORM SEWER INV=5296.52, 8" SANITARY SEWER TOP OF PIPE=5290.35 (MAINTAIN 18" VERTICAL SEPARATION)
- S3 PROPOSED 4" SANITARY SEWER SERVICE, SEE SHEET C3.1
- S4 UTILITY CROSSING 8" WATER MAIN INV=5295.83, 8" SANITARY SEWER TOP OF PIPE=5293.60 (MAINTAIN 18" VERTICAL SEPARATION)
- S5 PROPOSED 6" SANITARY SEWER SERVICE, SEE SHEET C3.1
- S6 UTILITY CROSSING 4" FIRE SERVICE INV=5297.77, 8" SANITARY SEWER TOP OF PIPE=5295.99 (MAINTAIN 18" VERTICAL SEPARATION)
- S7 UTILITY CROSSING 1.5" WATER SERVICE INV=5297.64, 8" SANITARY SEWER TOP OF PIPE=5296.06 (MAINTAIN 18" VERTICAL SEPARATION)
- S8 UTILITY CROSSING 1" IRRIGATION SERVICE INV=5297.75, 8" SANITARY SEWER TOP OF PIPE=5296.21 (MAINTAIN 18" VERTICAL SEPARATION)

LEGEND

- PROPERTY LINE
- BOUNDARY LINE
- PROPOSED EASEMENT LINE
- EXISTING EDGE OF ASPHALT
- PROPOSED CONCRETE CURB AND GUTTER
- 5300 EXISTING CONTOUR
- 5300 PROPOSED MAJOR CONTOUR
- 5301 PROPOSED MINOR CONTOUR
- OP EXISTING OVERHEAD POWER
- SD STORM SEWER
- SS EXISTING SANITARY SEWER
- SS PROPOSED SANITARY SEWER
- UGE PROPOSED UNDERGROUND POWER
- W EXISTING WATER LINE
- W PROPOSED WATER LINE
- FO EXISTING FIBER OPTIC LINE
- LIGHT POLE
- T TRANSFORMER
- SIGN
- BENCHMARK/CONTROL POINT
- POWER POLE
- EXISTING CURB INLET
- FIRE HYDRANT
- WATER VALVE
- WATER METER
- CLEANOUT
- GREASE INTERCEPTOR LID
- SANITARY SEWER MANHOLE

NOTES:

1. SEE SHEETS C5.4–C5.5 FOR SANITARY SEWER DETAILS.
2. UTILITY CONSTRUCTION AND MATERIALS SHALL COMPLY WITH THE CITY OF BOULDER DESIGN AND CONSTRUCTION STANDARDS.
3. ALL LANDSCAPED AREAS DISTURBED BY CONSTRUCTION OF THE SANITARY SEWER MAIN SHALL BE RESTORED TO THE ORIGINAL CONDITION.

BENCHMARKS:

1. PROJECT BENCHMARK: THE PUBLISHED VALUES OF BOULDER COUNTY PRIMARY MONUMENT CONTROL STATION "B 322 RESET". EL=5508.90' (NAVD88), N:1272428.69, E:3061900.56
2. SITE BENCHMARK: 3" ALUMINUM CAP LOCATED IN THE INTERSECTION OF 47TH STREET AND INDEPENDENCE ROAD. EL=5304.38' (NAVD88), N:1257929.36, E:3072507.66

BASIS OF BEARINGS:

BEARINGS ARE BASED ON THE WEST LINE OF THE NW1/4 OF SECTION 21 AS HAVING A BEARING OF N00°06'56"W FROM THE W1/4 CORNER BEING MONUMENTED WITH A 3" ALUMINUM CAP TO THE W–N1/16 CORNER BEING ALSO MONUMENTED WITH A 3" ALUMINUM CAP AS SHOWN HEREON.

FLOOD ZONE:

THE SUBJECT PROPERTY FALLS WITHIN ZONE "X" DESCRIBED AS AREAS DETERMINED TO BE OUTSIDE THE 500–YEAR FLOODPLAIN; ACCORDING TO FEMA FLOOD INSURANCE RATE MAP 08013C0415F WITH AN EFFECTIVE DATE OF JUNE 2, 1995.

NOTE:

THE UNDERGROUND UTILITIES SHOWN HAVE BEEN LOCATED FROM FIELD SURVEY INFORMATION AND EXISTING DRAWINGS. THE ENGINEER/SURVEYOR MAKES NO GUARANTEES THAT THE UTILITIES SHOWN COMPRISE ALL SUCH UTILITIES IN THE AREA, EITHER IN–SERVICE OR ABANDONED. THE ENGINEER/SURVEYOR FURTHER DOES NOT WARRANT THAT THE UTILITIES SHOWN ARE IN THE EXACT LOCATION INDICATED, THE ENGINEER/SURVEYOR HAS NOT PHYSICALLY LOCATED THE UNDERGROUND UTILITIES. THIS INCLUDES PRIVATE AND PUBLIC UTILITIES.

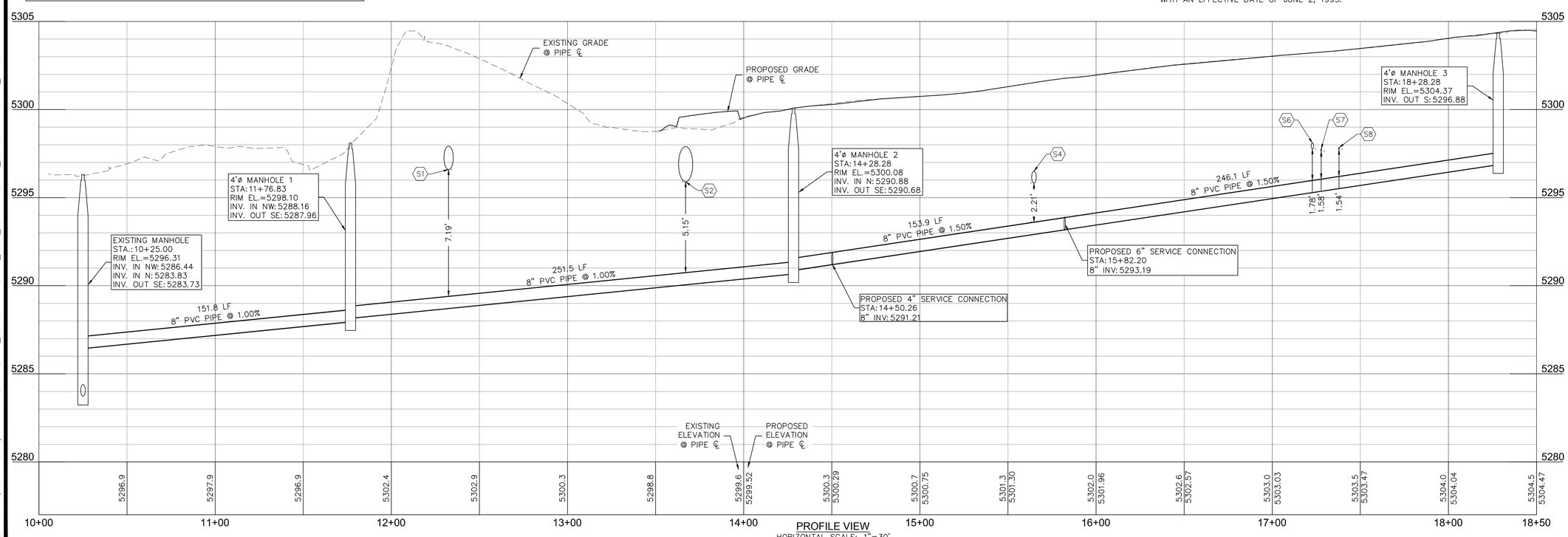

PROFILE VIEW
HORIZONTAL SCALE: 1"=30'
VERTICAL SCALE: 1"=3'

CITY APPROVAL STAMP:

OLSSON ASSOCIATES
4690 Table Mountain Drive
Suite 200
Golden, CO 80403
TEL 303.237.2072
FAX 303.237.2659
OA # 012-1417
www.olssonassociates.com

COLORADO LICENSED PROFESSIONAL ENGINEER JOSE EBRAMOUNDE 06/20/14 42141

Kum & Go

6400 Westown Parkway
West Des Moines, Iowa
50266
P: 515-226-0128
F: 515-223-9873

#943 - BOULDER, COLORADO
3365 DIAGONAL HWY.

SANITARY SEWER EXTENSION PLAN

KG PROJECT TEAM:
RDR: JXH
SDM: RJH
CPM: TLK

	DATE	REVISION DESCRIPTION

REVISIONS

DATE: 06-20-2014

SHEET NUMBER:
C3.3
13 OF 32

DWG: F:\Projects\012-1417_LDVP\Final_Plans\121417_SAN.dwg USER: sbower
DATE: Jul 01, 2014 2:43pm XREFS: 121417_PBASE 121417_TBLK_CD 121417_XBASE 121417_PUTIL

PAVING NOTES:

1. ALL WORK AND MATERIALS SHALL COMPLY WITH ALL CITY/COUNTY REGULATIONS AND CODES AND O.S.H.A. STANDARDS.
2. ALL RADIAL DIMENSIONS ARE TO BACK OF CURB UNLESS OTHERWISE NOTED.
3. ALL CURB SHALL BE 6" UNLESS OTHERWISE NOTED.
4. CONTRACTOR IS TO ENSURE SUBBASE IS SLOPED TO PROMOTE POSITIVE DRAINAGE.
5. PAVEMENT MUST HAVE A SOLAR REFLECTANCE INDEX (SRI) OF 29 OR HIGHER.
6. COORDINATE EXTERIOR SLAB FINISH AND SEALER WITH OWNER.
7. REFERENCE SHEET C4.3 FOR SPOT ELEVATION TABLES.
8. ALL ADA ACCESSIBLE STALLS/ROUTES TO BE CONSTRUCTED PER ADA STANDARDS.
9. REFER TO SHEET C4.2 FOR ALL ADA CURB RAMP, CONDENSER ENCLOSURE AND TRASH ENCLOSURE DETAILED GRADING.
10. REFER TO SHEET C4.6 FOR 47TH STREET ROADWAY IMPROVEMENTS.
11. TOP OF ISLAND TO BE A MAX OF 6" ABOVE TOP OF SLAB. ELEVATIONS SHOWN ARE TOP OF SLAB (TYP FOR ALL FUEL ISLANDS).

BENCHMARKS:

1. PROJECT BENCHMARK: THE PUBLISHED VALUES OF BOULDER COUNTY PRIMARY MONUMENT CONTROL STATION "B 322 RESET". EL=5508.90' (NAVD88), N:1272428.69, E:3061900.56
2. SITE BENCHMARK: 3" ALUMINUM CAP LOCATED IN THE INTERSECTION OF 47TH STREET AND INDEPENDENCE ROAD. EL=5304.38' (NAVD88), N:1257929.36, E:3072507.66

FLOOD ZONE:

THE SUBJECT PROPERTY FALLS WITHIN ZONE "X" DESCRIBED AS AREAS DETERMINED TO BE OUTSIDE THE 500-YEAR FLOODPLAIN; ACCORDING TO FEMA FLOOD INSURANCE RATE MAP 08013C0415F WITH AN EFFECTIVE DATE OF JUNE 2, 1995.

BASIS OF BEARINGS:

BEARINGS ARE BASED ON THE WEST LINE OF THE NW1/4 OF SECTION 21 AS HAVING A BEARING OF N00°06'56"W FROM THE W1/4 CORNER BEING MONUMENTED WITH A 3" ALUMINUM CAP TO THE W-N1/16 CORNER BEING ALSO MONUMENTED WITH A 3" ALUMINUM CAP AS SHOWN HEREON.

FLAG NOTES:

1. ADA ACCESSIBLE STALL, NOT TO EXCEED 2% GRADE IN ANY DIRECTION
2. MATCH EXISTING GRADE, CONTRACTOR TO VERIFY
3. ALL FILL LIDS FOR UNDERGROUND FUEL TANKS TO BE 1" ABOVE TOP OF SLAB
4. CONSTRUCT 6" STANDARD CURB, SEE DETAIL SHEET C5.1
5. INSTALL 8" PORTLAND CEMENT CONCRETE PAVEMENT, SEE SHEET C4.2 FOR PAVEMENT SECTION
6. CONSTRUCT 6" CONCRETE BUILDING SIDEWALK (1% MAX. CROSS SLOPE), SEE STRUCTURAL PLANS FOR DETAILS
7. CONSTRUCT 6" SITE SIDEWALK, SEE DETAIL SHEET C5.1
8. 4" YELLOW PAVEMENT MARKING, TYPICAL
9. GRADE BREAK
10. CONSTRUCT ADA RAMP (TYPE 2), SEE DETAIL SHEET C5.1
11. CONTRACTOR TO ADJUST RIM TO GRADE
12. INSTALL "NO LEFT TURN" SIGN, SEE SHEET C5.1
13. INSTALL 4' X 4' AIR MACHINE PAD, SEE DETAIL SHEET C5.2
14. MATCH EXISTING ASPHALT
15. REPLACE ASPHALT, MATCH EXISTING PAVEMENT DEPTH
16. CONSTRUCT CITY OF BOULDER STANDARD 6" CURB AND GUTTER PER DETAIL 2.01A, SEE SHEET C5.3
17. CONSTRUCT ADA RAMP (TYPE 1), SEE DETAIL SHEET C5.1
18. CONSTRUCT DRAINAGE CURB OPENING, WIDTH PER PLAN, SEE SHEET C2.1
19. INSTALL "STOP" SIGN, SEE SHEET C5.1
20. DRIVEWAY ENTRANCE MARKINGS, SEE SHEET C5.1
21. CONSTRUCT CONCRETE CROSS PAN, SEE SHEET C5.3
22. 4" DOUBLE YELLOW SOLID STRIPING
23. 4" WHITE SOLID STRIPING
24. LOADING ZONE, STRIPE 45° HATCH WITH 4" YELLOW PAVEMENT MARKINGS (2.5' SPACING)
25. DESIGNATED EMPLOYEE PARKING, 1' X 2' PAINTED SOLID RED OVAL

LEGEND:

- PROPOSED BOUNDARY LINE
- PROPERTY LINE
- EXISTING CURB AND GUTTER
- EXISTING EDGE OF ASPHALT
- PROPOSED CURB
- PROPOSED CURB AND GUTTER
- PROPOSED GRADE BREAK
- (EX) (PR) LIGHT POLE
- (EX) (PR) SIGN
- (EX) T (PR) TRANSFORMER
- ELECTRIC RISER
- ELECTRIC METER
- ELECTRIC MANHOLE
- TRAFFIC SIGNAL BOX
- UNKNOWN UTILITY MANHOLE
- FIBER OPTIC VAULT
- TELEPHONE CABINET
- TELEPHONE PEDESTAL
- GAS VALVE
- WATER VALVE
- SANITARY SEWER MANHOLE
- GREASE INTERCEPTOR LID
- CLEANOUT
- STORM SEWER INLET
- FLARED END SECTION
- STORM SEWER MANHOLE
- RIPRAP
- BOLLARD
- PROPOSED MONUMENT SIGN
- BENCHMARK/CONTROL POINT
- PROPERTY MONUMENT, FOUND
- PROPERTY MONUMENT, SET

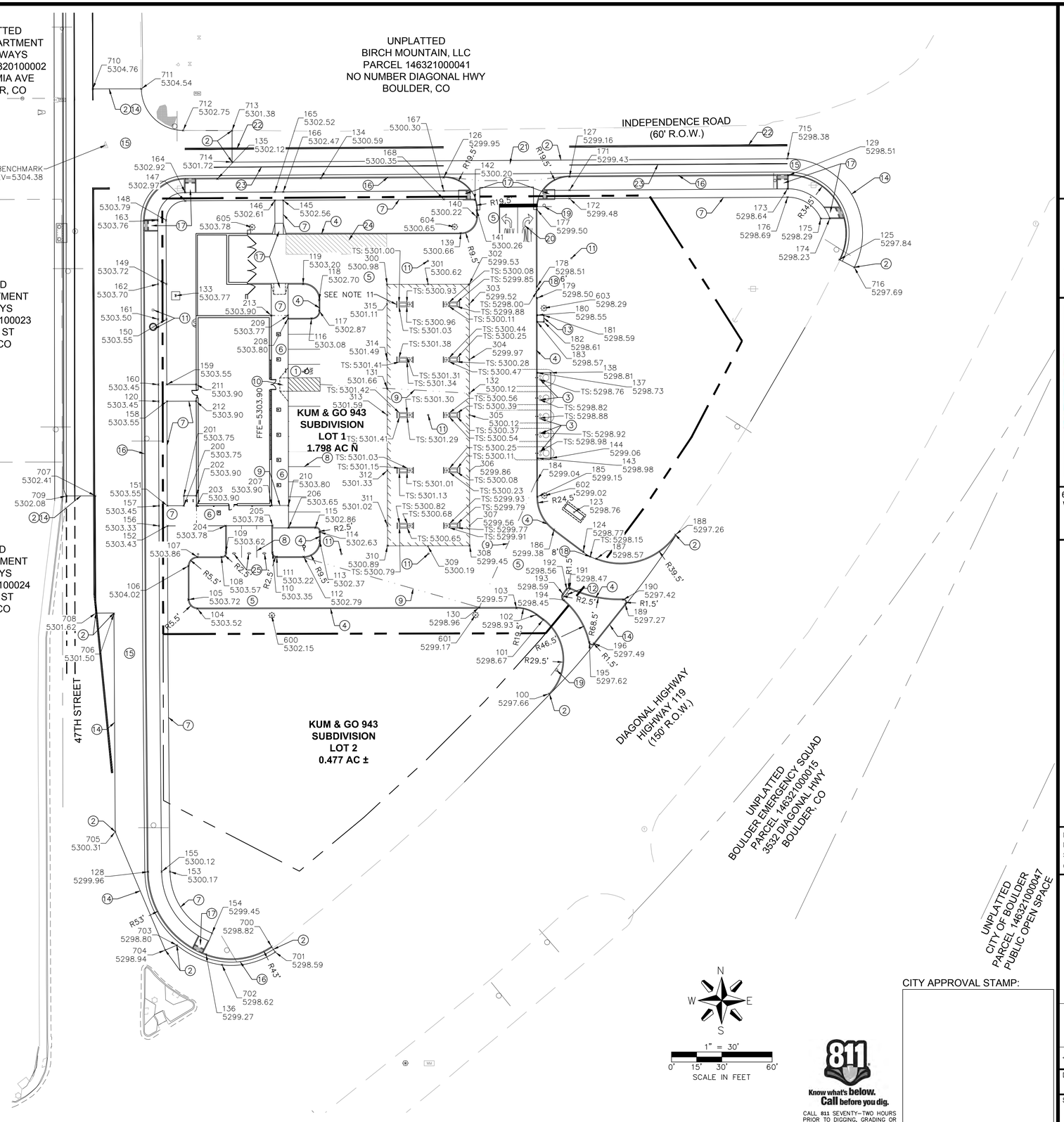

811 Know what's below. Call before you dig.

CALL 811 SEVENTY-TWO HOURS PRIOR TO DIGGING, GRADING OR EXCAVATING FOR THE MARKING OF UNDERGROUND MEMBER UTILITIES

CITY APPROVAL STAMP:

OLSSON ASSOCIATES
4690 Table Mountain Drive
Suite 200
Golden, CO 80403
TEL 303.237.2072
FAX 303.237.2659
OA # 012-1417
www.olsson-associates.com

COLORADO LICENSED PROFESSIONAL ENGINEER 06/20/14 42141

Kum & Go

6400 Westown Parkway
West Des Moines, Iowa
50266
P: 515-226-0128
F: 515-223-9873

#943 - BOULDER, COLORADO
3365 DIAGONAL HWY.

PAVING GEOMETRIC & SPOT ELEVATION PLAN

KG PROJECT TEAM:
RDR: JXH
SDM: RJH
CPM: TLK

	DATE	REVISION DESCRIPTION

REVISIONS

DATE: 06-20-2014

SHEET NUMBER:
C4.1
14 OF 32

DWG: F:\Projects\012-1417_LDVP\Final_Plans\121417_PAV.dwg USER: sbower
DATE: Jul 01, 2014 2:43pm XREFS: 121417_XBASE 121417_PBASE 121417_TBLK_CD
DOCUMENT REVISION DATE AUGUST 2012

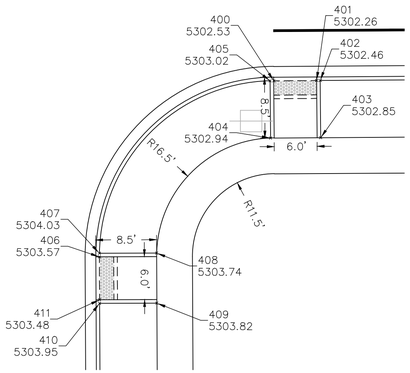

DETAIL A
SPOT ELEVATION DETAIL @ ADA RAMP
SCALE: 1"=10"

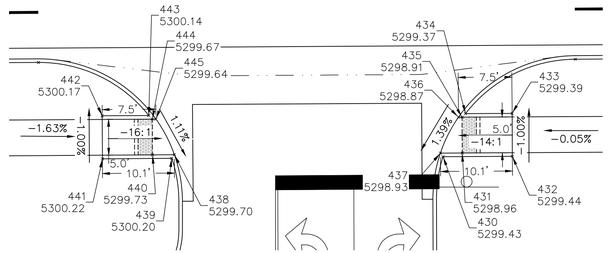

DETAIL D
SPOT ELEVATION DETAIL @ ADA RAMP
SCALE: 1"=10"

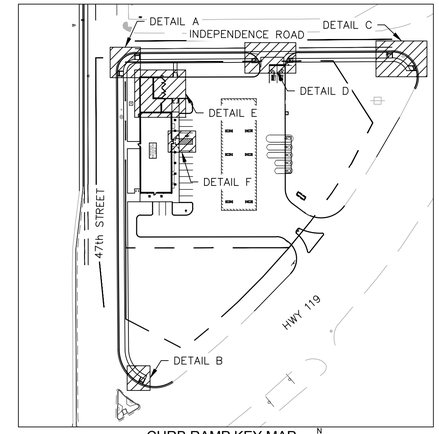

CURB RAMP KEY MAP
SCALE: 1"=100'

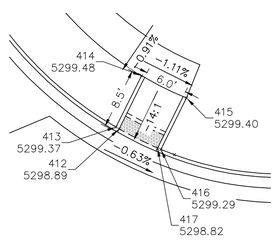

DETAIL B
SPOT ELEVATION DETAIL @ ADA RAMP
SCALE: 1"=10"

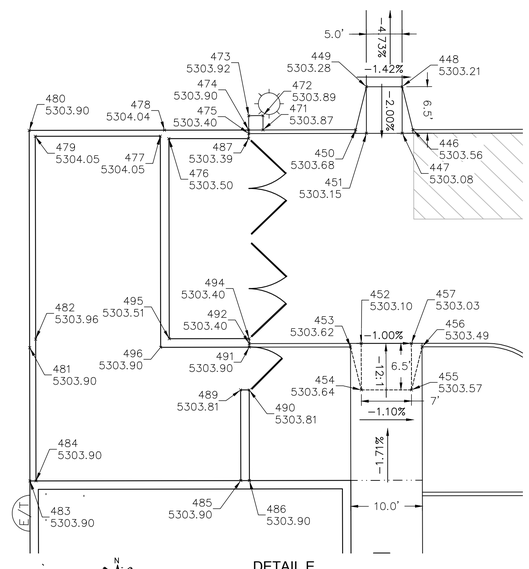

DETAIL E
SPOT ELEVATION DETAIL @ ADA RAMP
SCALE: 1"=10"

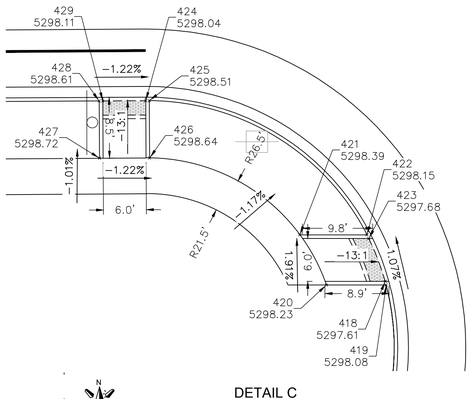

DETAIL C
SPOT ELEVATION DETAIL @ ADA RAMP
SCALE: 1"=10"

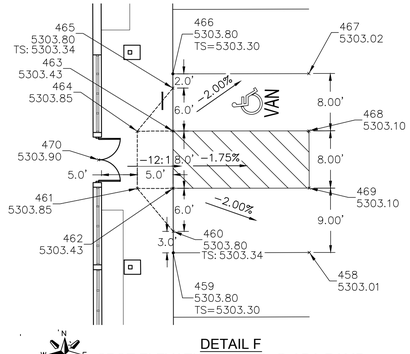

DETAIL F
SPOT ELEVATION DETAIL @ ADA RAMP
SCALE: 1"=10"

PAVING NOTES:

1. REFER TO SHEET C4.3 FOR SPOT ELEVATION TABLE.
2. TS=TOP OF SLAB, TC=TOP OF CURB

NOTE:
ALL ELEVATIONS ARE TO BACK OF CURB UNLESS OTHERWISE NOTED. DEDUCT 0.5' TO GET TOP OF SLAB ELEVATIONS.

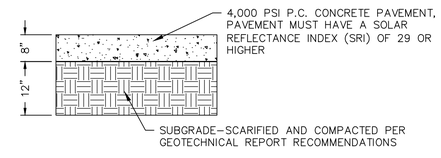

CONCRETE PAVEMENT SECTION
NOT TO SCALE

Know what's below. Call before you dig.
CALL 811 SEVENTY-TWO HOURS PRIOR TO DIGGING, GRADING OR EXCAVATING FOR THE MARKING OF UNDERGROUND MEMBER UTILITIES

CITY APPROVAL STAMP:

OLSSON ASSOCIATES
4690 Table Mountain Drive
Suite 200
Golden, CO 80403
TEL 303.237.2072
FAX 303.237.2659
OA # 012-1417
www.olsson-associates.com

COLORADO LICENSED PROFESSIONAL ENGINEER 06/20/14 42161

Kum & Go

6400 Westown Parkway
West Des Moines, Iowa
50266
P: 515-226-0128
F: 515-223-9873

#943 - BOULDER, COLORADO
3365 DIAGONAL HWY.

PAVING GEOMETRICS DETAILS

KG PROJECT TEAM:
RDR: JXH
SDM: RJH
CPM: TLK

REVISIONS

△	DATE	REVISION DESCRIPTION

DATE: 06-20-2014

SHEET NUMBER:
C4.2
15 OF 32

DWG: F:\Projects\012-1417_LDVP\Final_Plans\121417_PAV.dwg USER: sbower
DATE: Jul 01, 2014 2:43pm XREFS: 121417_XBASE 121417_PBASE 121417_TBLK_CD
DOCUMENT REVISION DATE AUGUST 2012

DOCUMENT REVISION DATE: AUGUST 2012

POINT TABLE

POINT #		NORTHING	EASTING	ELEVATION	
100	TC	1257604.23	3072769.84	5297.66	
101	TC	1257648.27	3072766.27	5298.67	
102	TC	1257651.35	3072762.17	5298.93	
103	TC	1257655.25	3072750.43	5299.57	
104	TC	1257654.86	3072560.31	5303.52	
105	TC	1257660.35	3072554.80	5303.72	
106	TC	1257680.35	3072554.76	5304.02	
107	TC	1257685.86	3072560.25	5303.86	
108	TC	1257685.89	3072574.58	5303.57	
109	TC	1257688.40	3072577.07	5303.62	
110	TC	1257688.46	3072605.07	5303.35	
111	TC	1257685.96	3072607.58	5303.22	
112	TC	1257685.99	3072623.57	5302.79	
113	TC	1257695.51	3072633.05	5302.37	
114	TC	1257700.67	3072633.04	5302.63	
115	TC	1257703.17	3072630.54	5302.86	
116	TC	1257828.16	3072628.29	5303.08	
117	TC	1257832.67	3072632.78	5302.87	
118	TC	1257838.98	3072632.77	5302.70	
119	TC	1257848.46	3072623.25	5303.20	
120	SWLK	1257778.60	3072537.04	5303.45	
123	FG	1257712.50	3072784.78	5298.76	
124	TC	1257689.06	3072790.28	5298.77	
125	TC	1257863.10	3072942.89	5297.84	
126	PC	1257912.09	3072707.04	5299.95	

POINT TABLE

POINT #		NORTHING	EASTING	ELEVATION	
127	PC	1257912.54	3072782.04	5299.16	
128	PC	1257498.01	3072530.90	5299.96	
129	PC	1257913.33	3072912.48	5298.51	
130	TC	1257655.70	3072728.26	5298.96	
131	TS	1257786.33	3072673.37	5301.66	
132	TS	1257783.45	3072722.38	5300.12	
133	FG	1257841.57	3072547.24	5303.77	
134	TC	1257911.64	3072633.75	5300.59	
135	TC	1257911.27	3072572.11	5302.12	
136	TC	1257448.84	3072565.40	5299.27	
137	TC	1257795.64	3072762.86	5298.73	
138	TS	1257795.66	3072770.85	5298.81	
139	TC	1257879.02	3072717.19	5300.66	
140	TC	1257888.53	3072726.67	5300.22	
141	TC	1257892.63	3072726.66	5300.26	
142	TC	1257898.70	3072725.68	5300.20	
143	TC	1257744.64	3072762.96	5298.98	
144	TS	1257744.66	3072770.96	5299.06	
145	SWLK	1257898.50	3072611.44	5302.56	
146	SWLK	1257898.47	3072606.44	5302.61	
147	SWLK	1257898.15	3072553.00	5302.97	
148	SWLK	1257886.60	3072541.56	5303.79	
149	SWLK	1257848.59	3072541.73	5303.72	
150	SWLK	1257827.59	3072541.82	5303.55	
151	SWLK	1257716.33	3072542.31	5303.55	

POINT TABLE

POINT #		NORTHING	EASTING	ELEVATION	
152	SWLK	1257704.33	3072542.37	5303.43	
153	SWLK	1257498.13	3072543.90	5300.17	
154	SWLK	1257461.40	3072568.96	5299.45	
155	SWLK	1257498.08	3072538.90	5300.12	
156	SWLK	1257704.31	3072537.37	5303.33	
157	SWLK	1257716.31	3072537.31	5303.45	
158	SWLK	1257778.62	3072542.04	5303.55	
159	SWLK	1257788.62	3072541.99	5303.55	
160	SWLK	1257788.60	3072536.99	5303.45	
161	SWLK	1257827.57	3072536.82	5303.50	
162	SWLK	1257848.57	3072536.73	5303.70	
163	SWLK	1257886.58	3072536.56	5303.76	
164	SWLK	1257903.15	3072552.96	5302.92	
165	SWLK	1257903.47	3072606.41	5302.52	
166	SWLK	1257903.50	3072611.41	5302.47	
167	SWLK	1257904.09	3072707.09	5300.30	
168	SWLK	1257899.09	3072707.12	5300.35	
171	SWLK	1257904.54	3072782.09	5299.43	
172	SWLK	1257899.54	3072782.12	5299.48	
173	SWLK	1257905.33	3072912.03	5298.64	
174	SWLK	1257887.58	3072937.20	5298.23	
175	SWLK	1257887.58	3072931.83	5298.29	
176	SWLK	1257900.33	3072912.06	5298.69	
177	TC	1257893.00	3072762.66	5299.50	
178	TC	1257847.17	3072762.75	5298.51	

POINT TABLE

POINT #		NORTHING	EASTING	ELEVATION	
179	TC	1257840.17	3072762.77	5298.50	
180	TC	1257829.99	3072762.79	5298.55	
181	TC	1257830.00	3072766.79	5298.59	
182	TC	1257826.00	3072766.79	5298.61	
183	TC	1257825.99	3072762.79	5298.57	
184	TC	1257731.69	3072762.98	5299.04	
185	TC	1257721.67	3072763.00	5299.15	
186	TC	1257702.12	3072772.80	5299.38	
187	TC	1257684.82	3072798.21	5298.57	
188	TC	1257699.09	3072845.20	5297.26	
189	TC	1257657.79	3072815.23	5297.27	
190	TC	1257660.22	3072814.00	5297.42	
191	TC	1257666.76	3072782.27	5298.47	
192	TC	1257666.30	3072780.43	5298.56	
193	TC	1257663.49	3072778.32	5298.59	
194	TC	1257660.09	3072778.70	5298.45	
195	TC	1257634.93	3072793.93	5297.62	
196	TC	1257634.33	3072796.56	5297.49	
200	SWLK	1257716.35	3072552.18	5303.75	
201	SWLK	1257722.35	3072552.17	5303.75	
202	SWLK	1257722.35	3072559.67	5303.90	
203	SWLK	1257716.37	3072559.68	5303.90	
204	TC	1257704.40	3072577.04	5303.78	
205	TC	1257704.46	3072605.04	5303.78	
206	TC	1257703.14	3072614.54	5303.65	

POINT TABLE

POINT #		NORTHING	EASTING	ELEVATION	
207	SWLK	1257716.45	3072604.51	5303.90	
208	TC	1257828.14	3072614.29	5303.80	
209	SWLK	1257829.81	3072614.29	5303.77	
210	TC	1257716.47	3072614.51	5303.80	
211	SWLK	1257788.70	3072559.54	5303.90	
212	SWLK	1257778.70	3072559.56	5303.90	
213	SWLK	1257829.79	3072604.29	5303.90	
300	FG	1257848.40	3072673.25	5300.98	
301	FG	1257848.45	3072697.75	5300.62	
302	FG	1257848.50	3072722.25	5299.53	
303	FG	1257836.57	3072722.27	5299.52	
304	FG	1257803.39	3072722.34	5299.97	
305	FG	1257770.50	3072722.41	5300.12	
306	FG	1257737.10	3072722.47	5299.86	
307	FG	1257704.52	3072722.54	5299.56	
308	FG	1257692.50	3072722.56	5299.45	
309	FG	1257692.19	3072697.64	5300.19	
310	FG	1257692.40	3072673.56	5300.89	
311	FG	1257704.45	3072673.54	5301.02	
312	FG	1257737.43	3072673.47	5301.33	
313	FG	1257770.40	3072673.41	5301.59	
314	FG	1257803.68	3072673.34	5301.49	
315	FG	1257836.52	3072673.27	5301.11	
400	TC/TS	1257911.15	3072552.92	5302.53	DETAIL A
401	TC/TS	1257911.19	3072558.91	5302.26	DETAIL A

POINT TABLE

POINT #		NORTHING	EASTING	ELEVATION	
402	TC	1257911.19	3072559.41	5302.46	DETAIL A
403	TC	1257903.19	3072559.47	5302.85	DETAIL A
404	TC	1257903.14	3072552.47	5302.94	DETAIL A
405	TC	1257911.14	3072552.41	5303.02	DETAIL A
406	TC/TS	1257886.54	3072528.56	5303.57	DETAIL A
407	TC	1257887.04	3072528.56	5304.03	DETAIL A
408	TC	1257887.08	3072536.56	5303.74	DETAIL A
409	TC	1257880.08	3072536.59	5303.82	DETAIL A
410	TC	1257880.04	3072528.59	5303.95	DETAIL A
411	TC/TS	1257880.54	3072528.59	5303.48	DETAIL A
412	TC/TS	1257452.44	3072557.69	5298.89	DETAIL B
413	TC	1257452.69	3072557.26	5299.37	DETAIL B
414	TC/SWLK	1257459.87	3072560.82	5299.48	DETAIL B
415	TC/SWLK	1257456.76	3072567.09	5299.40	DETAIL B
416	TC	1257449.58	3072563.53	5299.29	DETAIL B
417	TC/TS	1257449.77	3072563.07	5298.82	DETAIL B
418	TC/TS	1257888.08	3072945.43	5297.61	DETAIL C
419	TC	1257887.58	3072945.56	5298.08	DETAIL C
420	TC	1257887.58	3072937.20	5298.23	DETAIL C
421	TC	1257894.58	3072933.50	5298.39	DETAIL C
422	TC	1257894.58	3072942.88	5298.15	DETAIL C
423	TC/TS	1257894.08	3072943.13	5297.68	DETAIL C
424	TC/TS	1257913.33	3072911.98	5298.04	DETAIL C
425	TC	1257913.33	3072912.48	5298.51	DETAIL C
426	TC	1257905.33	3072912.53	5298.64	DETAIL C

POINT TABLE

POINT #		NORTHING	EASTING	ELEVATION	
427	TC	1257905.29	3072905.53	5298.72	DETAIL C
428	TC	1257913.29	3072905.48	5298.61	DETAIL C
429	TC/TS	1257913.29	3072905.98	5298.11	DETAIL C
430	TC	1257898.93	3072763.57	5299.43	DETAIL D
431	TC	1257899.44	3072766.26	5298.96	DETAIL D
432	TC	1257898.99	3072773.26	5299.44	DETAIL D
433	TC	1257904.99	3072773.22	5299.39	DETAIL D
434	TC	1257904.95	3072766.72	5299.37	DETAIL D
435	TC	1257904.46	3072766.23	5298.91	DETAIL D
436	TC/TS	1257904.44	3072765.73	5298.87	DETAIL D
437	TC/TS	1257899.43	3072763.21	5298.93	DETAIL D
438	TC/TS	1257899.20	3072726.03	5299.70	DETAIL D
439	TC	1257898.70	3072725.68	5300.20	DETAIL D
440	TC	1257899.18	3072722.98	5299.73	DETAIL D
441	TC	1257898.64	3072715.99	5300.22	DETAIL D
442	TC	1257904.64	3072715.95	5300.17	DETAIL D
443	TC	1257904.68	3072722.46	5300.14	DETAIL D
444	TC	1257904.18	3072722.95	5299.67	DETAIL D
445	TC/TS	1257904.19	3072723.45	5299.64	DETAIL D
446	TC	1257878.80	3072612.98	5303.56	DETAIL E
447	TC/TS	1257878.30	3072611.48	5303.08	DETAIL E
448	SWLK	1257884.80	3072611.46	5303.21	DETAIL E
449	SWLK	1257884.79	3072606.46	5303.28	DETAIL E
450	TC	1257878.79	3072604.98	5303.68	DETAIL E
451	TC/TS	1257878.29	3072606.48	5303.15	DETAIL E

POINT TABLE

POINT #		NORTHING	EASTING	ELEVATION	
452	TC/TS	1257848.93	3072605.75	5303.10	DETAIL E
453	TC	1257848.42	3072604.25	5303.62	DETAIL E
454	SWLK	1257842.43	3072605.76	5303.64	DETAIL E
455	SWLK	1257842.44	3072612.76	5303.57	DETAIL E
456	TC	1257848.44	3072614.25	5303.49	DETAIL E
457	TC/TS	1257848.94	3072612.75	5303.03	DETAIL E
458	TS	1257775.67	3072633.40	5303.01	DETAIL F
459	TC	1257775.64	3072614.40	5303.80	DETAIL F
460	TC	1257778.63	3072614.39	5303.80	DETAIL F
461	SWLK	1257784.62	3072609.38	5303.85	DETAIL F
462	TC/TS	1257784.64	3072614.38	5303.43	DETAIL F
463	TC/TS	1257792.64	3072614.36	5303.43	DETAIL F
464	SWLK	1257792.63	3072609.36	5303.85	DETAIL F
465	TC	1257798.63	3072614.35	5303.80	DETAIL F
466	TC	1257800.64	3072614.35	5303.79	DETAIL F
467	TS	1257800.67	3072633.34	5303.02	DETAIL F
468	TS	1257792.67	3072633.36	5303.10	DETAIL F
469	TS	1257784.67	3072633.38	5303.10	DETAIL F
470	SWLK	1257788.62	3072603.98	5303.90	DETAIL F
471	TC	1257878.76	3072592.02	5303.87	DETAIL E
472	TS	1257880.76	3072592.02	5303.89	DETAIL E
473	TS	1257880.76	3072590.02	5303.92	DETAIL E
474	TC	1257878.76	3072590.02	5303.90	DETAIL E
475	TS	1257878.26	3072590.03	5303.40	DETAIL E
476	TS	1257877.54	3072578.86	5303.50	DETAIL E

POINT TABLE

POINT #		NORTHING	EASTING	ELEVATION	
477	TS	1257877.90	3072577.66	5304.05	DETAIL E
478	FG	1257878.73	3072578.26	5304.04	DETAIL E
479	TS	1257877.87	3072560.19	5304.05	DETAIL E
480	FG	1257878.70	3072559.36	5303.90	DETAIL E
481	FG	1257848.33	3072559.42	5303.90	DETAIL E
482	TS	1257849.53	3072560.25	5303.96	DETAIL E
483	FG	1257829.70	3072559.46	5303.90	DETAIL E
484	TS	1257829.70	3072560.29	5303.90	DETAIL E
485	TS	1257829.76	3072588.92	5303.90	DETAIL E
486	FG	1257829.76	3072590.12	5303.90	DETAIL E
487	TS	1257877.56	3072590.03	5303.39	DETAIL E
489	TS	1257842.42	3072588.90	5303.81	DETAIL E
490	FG	1257842.43	3072590.10	5303.81	DETAIL E
491	TC	1257848.39	3072590.09	5303.90	DETAIL E
492	TS	1257848.89	3072590.08	5303.40	DETAIL E
494	TS	1257849.59	3072590.08	5303.40	DETAIL E
495	TS	1257849.57	3072578.92	5303.51	DETAIL E
496	TS	1257848.37	3072577.72	5303.90	DETAIL E
600	FG	1257650.95	3072604.57	5302.15	
601	FG	1257651.20	3072726.04	5299.17	
602	FG	1257722.37	3072767.00	5299.02	
603	FG	1257834.18	3072766.78	5298.29	
604	FG	1257882.67	3072713.55	5300.65	
605	FG	1257882.43	3072592.87	5303.78	
700	TC	1257453.45	3072604.40	5298.82	

POINT TABLE

POINT #		NORTHING	EASTING	ELEVATION	
701	TP	1257450.13	3072606.63	5298.59	
702	TP	1257442.51	3072574.89	5298.62	
703	TP	1257454.23	3072547.98	5298.80	
704	TP	1257451.31	3072541.07	5298.94	
705	TP	1257521.89	3072511.26	5300.31	
706	TP	1257651.93	3072510.47	5301.50	
707	TP	1257722.26	3072499.38	5302.41	
708	TP	1257652.32	3072499.80	5301.62	
709	TP	1257722.16	3072482.16	5302.08	
710	TP	1257964.95	3072497.87	5304.76	
711	TP	1257965.00	3072526.80	5304.54	
712	TP	1257940.17	3072551.73	5302.75	
713	TP	1257940.10	3072580.89	5301.38	
714	TP	1257921.32	3072580.89	5301.72	
715	TP	1257923.33	3072911.92	5298.38	
716	TP	1257858.54	3072951.79	5297.69	

NOTE:
ALL ELEVATIONS ARE TO BACK OF CURB UNLESS OTHERWISE NOTED. DEDUCT 0.5' TO GET TOP OF SLAB ELEVATIONS.

TS	TOP OF SLAB
TC	TOP OF CURB
ME	MATCH EXISTING
FFE	FINISHED FLOOR ELEVATION
SWLK	SIDEWALK
LP	LOW POINT
HP	HIGH POINT
FG	FINISHED GRADE
TP	TOP OF PAVEMENT

POINT LAYOUT DESIGN:

100–199	EXTERIOR CURB AND GUTTER
200–299	BUILDING AND SURROUNDING PARKING
300–399	CANOPY
400–599	DETAILS
600–699	LIGHT POLE LOCATION
700–799	MATCH EXISTING GRADE, TOP OF PAVEMENT

DWG: F:\Projects\012-1417_LDVP\Final_Plans\121417_PAV.dwg USER: sbower
DATE: Jul 01, 2014 2:44pm XREFS: 121417_XBASE 121417_PBASE 121417_TBLK_CD

Know what's below. Call before you dig.
CALL 811 SEVENTY–TWO HOURS PRIOR TO DIGGING, GRADING OR EXCAVATING FOR THE MARKING OF UNDERGROUND MEMBER UTILITIES

CITY APPROVAL STAMP:

OLSSON ASSOCIATES
4690 Table Mountain Drive
Suite 200
Golden, CO 80403
TEL 303.237.2072
FAX 303.237.2659
OA # 012-1417
www.olssonassociates.com

COLORADO LICENSED PROFESSIONAL ENGINEER JOSH ERRAMOUSPE 42141 06/20/14

Kum & Go

6400 Westown Parkway
West Des Moines, Iowa
50266
P: 515-226-0128
F: 515-223-9873

#943 - BOULDER, COLORADO
3365 DIAGONAL HWY.

SPOT ELEVATIONS TABLE

KG PROJECT TEAM:
RDR: JXH
SDM: RJH
CPM: TLK

REVISIONS

	DATE	REVISION DESCRIPTION

DATE: 06-20-2014

SHEET NUMBER:
C4.3

POINT TABLE				
POINT #	DESCRIPTION	ELEVATION	NORTHING	EASTING
800	TS	5298.14	1257812.99	3072762.32
801	TS	5298.32	1257812.96	3072750.32
802	TS	5298.18	1257842.96	3072750.26
803	TS	5298.00	1257842.99	3072762.26
804	TS	5301.35	1257785.78	3072697.76
805	TS	5301.15	1257803.45	3072697.73
806	TS	5300.97	1257819.36	3072697.69
807	TS	5300.77	1257836.45	3072697.66
808	TS	5300.58	1257852.95	3072697.63
809	TS	5300.93	1257852.90	3072673.24
810	TS	5300.97	1257852.89	3072668.24
811	TS	5301.17	1257836.39	3072668.27
812	TS	5301.34	1257822.30	3072668.30
813	TS	5301.27	1257823.05	3072673.30
814	TS	5301.58	1257803.39	3072668.34
815	TS	5301.72	1257790.72	3072668.36
816	TS	5301.63	1257791.73	3072673.36
817	TS	5301.67	1257786.00	3072673.37
818	TS	5303.10	1257785.65	3072633.37
819	TS	5303.10	1257791.65	3072633.36

GENERAL NOTES:

1. CHANGES TO THE ADA COMPLIANCE PLAN MUST FOLLOW THE RFI PROCESS PRIOR TO FIELD CHANGES INCLUDING REQUEST BY GOVERNING AUTHORITIES.
2. GRADING PLAN SHALL PROVIDE GRADING ELEVATION DETAILS. CLARIFICATIONS OR ADDITIONAL INFORMATION MUST FOLLOW THE RFI PROCESS.
3. SIDEWALK REPLACEMENT MUST MEET THE CURRENT FEDERAL ADA REQUIREMENTS.
4. SEALANT JOINTS MUST NOT EXCEED ¼" MAXIMUM DEPTH OR PROJECTION FOR INSTALLATION IN ADA ROUTES.
5. REFERENCE SHEETS C4.1, C4.2, AND C4.3 FOR ADDITIONAL SPOT ELEVATIONS AND TABLE.

BENCHMARK:

1. PROJECT BENCHMARK: THE PUBLISHED VALUES OF BOULDER COUNTY PRIMARY MONUMENT CONTROL STATION "B 322 RESET". EL=5508.90' (NAVD88)
2. SITE BENCHMARK: 3" ALUMINUM CAP LOCATED IN THE INTERSECTION OF 47TH STREET AND INDEPENDENCE ROAD. EL=5304.38' (NAVD88)

FLOOD ZONE:

THE SUBJECT PROPERTY FALLS WITHIN ZONE "X" DESCRIBED AS AREAS DETERMINED TO BE OUTSIDE THE 500-YEAR FLOODPLAIN; ACCORDING TO FEMA FLOOD INSURANCE RATE MAP 08013C0415F WITH AN EFFECTIVE DATE OF JUNE 2, 1995.

BASIS OF BEARINGS:

BEARINGS ARE BASED ON THE WEST LINE OF THE NW1/4 OF SECTION 21 AS HAVING A BEARING OF N00°06'56"W FROM THE W1/4 CORNER BEING MONUMENTED WITH A 3" ALUMINUM CAP TO THE W-N1/16 CORNER BEING ALSO MONUMENTED WITH A 3" ALUMINUM CAP AS SHOWN HEREON.

LEGEND

- PROPERTY BOUNDARY
- PROPERTY LINE
- PROPOSED CURB
- PROPOSED CURB AND GUTTER
- EXISTING CURB AND GUTTER
- ADA ACCESSIBLE ROUTE
- SIGNS
- LIGHT POLE
- ADA PATH OF TRAVEL AT 5'-0" WIDE, 2% MAX. CROSS SLOPE; 5% MAX. RUNNING SLOPE. AREAS WILL BE FIELD VERIFIED BY OWNER. AREAS OUT OF COMPLIANCE WILL BE REMOVED AND REPLACED BY THE CONTRACTOR AT NO COST TO KUM & GO (SEE SHEETS C4.1 AND C4.2 FOR DETAILS)
- ADA LANDING AREA, 2% MAX. SLOPE IN ALL DIRECTIONS. AREAS WILL BE FIELD VERIFIED BY OWNER. AREAS OUT OF COMPLIANCE WILL BE REMOVED AND REPLACED BY THE CONTRACTOR AT NO COST TO KUM & GO (SEE SHEETS C4.1 AND C4.2 FOR DETAILS)
- ADA RAMPS, AREA INDICATES A 2% MAX. CROSS SLOPE AND 1:12 MAX. RUNNING SLOPE. RAMP SIDE SLOPES SHALL NOT EXCEED 1:10 MAX. FOR BUILDING SIDEWALK RAMPS AREAS WILL BE FIELD VERIFIED BY OWNER. AREAS OUT OF COMPLIANCE WILL BE REMOVED AND REPLACED BY THE CONTRACTOR AT NO EXPENSE TO OWNER (SEE SHEETS C4.1 AND C4.2 FOR DETAILS)
- 5'X5' MINIMUM LANDING AREA, 1% MAXIMUM

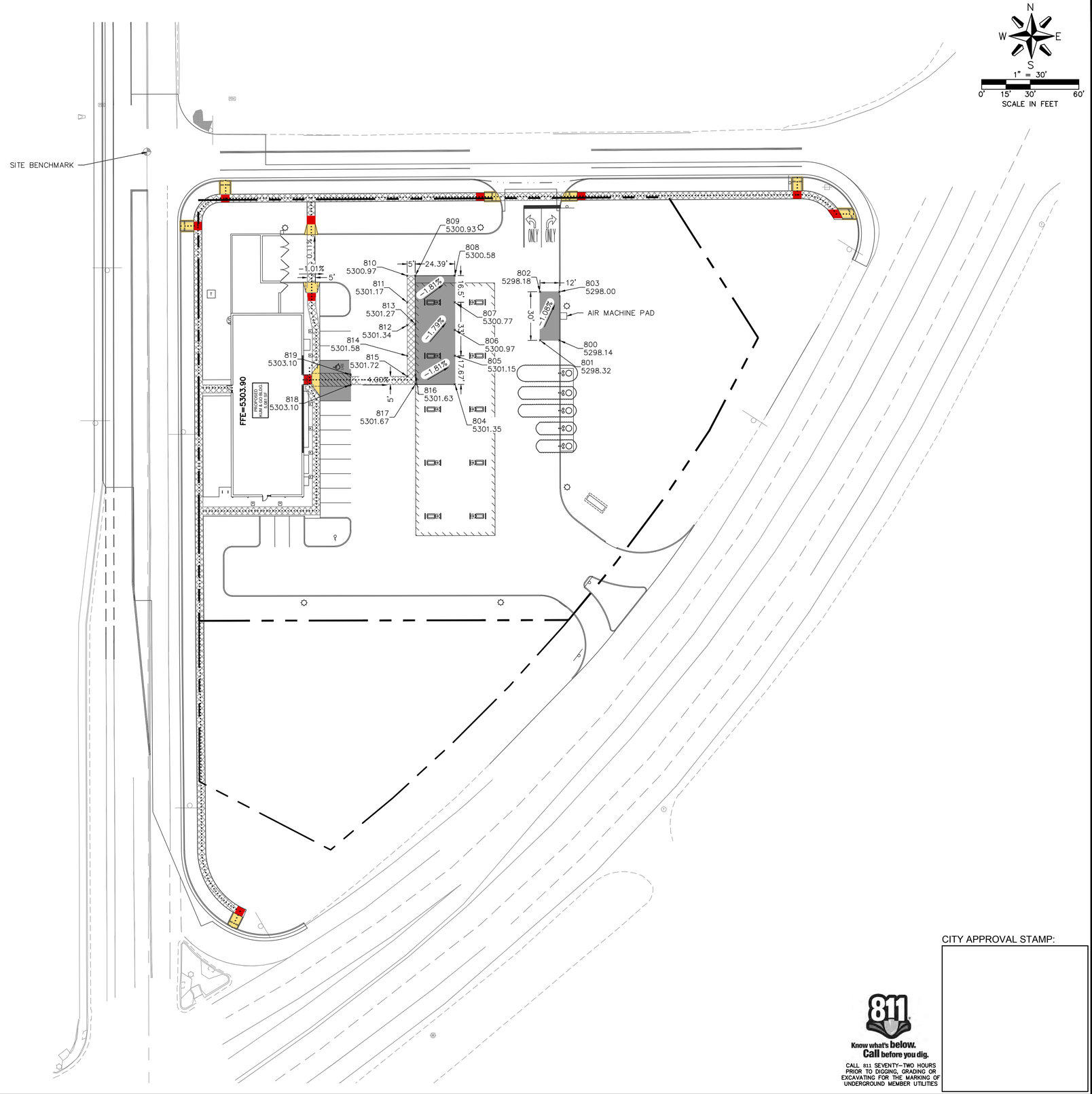

CITY APPROVAL STAMP:

Know what's below. Call before you dig.

CALL 811 SEVENTY-TWO HOURS PRIOR TO DIGGING, GRADING OR EXCAVATING FOR THE MARKING OF UNDERGROUND MEMBER UTILITIES

OLSSON ASSOCIATES
4690 Table Mountain Drive
Suite 200
Golden, CO 80403
TEL 303.237.2072
FAX 303.237.2659
www.olssonassociates.com
O.A. # 012-1417

COLORADO LICENSED PROFESSIONAL ENGINEER 06/20/14 42141

Kum & Go

6400 Westown Parkway
West Des Moines, Iowa
50266
P: 515-226-0128
F: 515-223-9873

#943 - BOULDER, COLORADO
3365 DIAGONAL HWY.

ADA COMPLIANCE PLAN

KG PROJECT TEAM:
RDR: JXH
SDM: RJH
CPM: TLK

REVISIONS

△	DATE	REVISION DESCRIPTION

DATE: 06-20-2014

SHEET NUMBER:
C4.4
17 OF 32

DWG: F:\Projects\012-1417_LDVP\Final_Plans\121417_ADA.dwg USER: sbower
DATE: Jul 01, 2014 2:44pm XREFS: 121417_XBASE 121417_PBASE 121417_TBLK_CD

NOTE:
THE UNDERGROUND UTILITIES SHOWN HAVE BEEN LOCATED FROM FIELD SURVEY INFORMATION AND EXISTING DRAWINGS. THE ENGINEER/SURVEYOR MAKES NO GUARANTEES THAT THE UTILITIES SHOWN COMPRISE ALL SUCH UTILITIES IN THE AREA, EITHER IN-SERVICE OR ABANDONED. THE ENGINEER/SURVEYOR FURTHER DOES NOT WARRANT THAT THE UTILITIES SHOWN ARE IN THE EXACT LOCATION INDICATED, THE ENGINEER/SURVEYOR HAS NOT PHYSICALLY LOCATED THE UNDERGROUND UTILITIES. THIS INCLUDES PRIVATE AND PUBLIC UTILITIES.

NOTES:

1. UTILITY CONSTRUCTION AND MATERIALS SHALL COMPLY WITH THE CITY OF BOULDER DESIGN AND CONSTRUCTION STANDARDS.

BENCHMARKS:

1. PROJECT BENCHMARK: THE PUBLISHED VALUES OF BOULDER COUNTY PRIMARY MONUMENT CONTROL STATION "B 322 RESET". EL=5508.90' (NAVD88), N:1272428.69, E:3061900.56
2. SITE BENCHMARK: 3" ALUMINUM CAP LOCATED IN THE INTERSECTION OF 47TH STREET AND INDEPENDENCE ROAD. EL=5304.38' (NAVD88), N:1257929.36, E:3072507.66

BASIS OF BEARINGS:

BEARINGS ARE BASED ON THE WEST LINE OF THE NW1/4 OF SECTION 21 AS HAVING A BEARING OF N00°06'56"W FROM THE W1/4 CORNER BEING MONUMENTED WITH A 3" ALUMINUM CAP TO THE W-N1/16 CORNER BEING ALSO MONUMENTED WITH A 3" ALUMINUM CAP AS SHOWN HEREON.

FLAG NOTES:

1. SAWCUT AND REMOVE EXISTING CURB AND GUTTER AND ATTACHED SIDEWALK
2. SAWCUT AND REMOVE EXISTING ASPHALT PAVEMENT
3. RELOCATE EXISTING SIGN
4. RELOCATE CURB INLET TO NEW CURB LINE
5. PROTECT EXISTING UTILITIES

LEGEND

- PROPERTY LINE
- EXISTING EDGE OF ASPHALT
- SS — SANITARY SEWER
- SD — STORM SEWER
- G — GAS MAIN
- OP — OVERHEAD POWER
- W — WATER LINE
- FO — EXISTING FIBER OPTIC LINE
- SAW CUT LINE
- LOD — LIMITS OF DISTURBANCE
- SIGN
- BENCHMARK/CONTROL POINT
- POWER POLE
- CURB INLET
- FLARED END SECTION
- FIRE HYDRANT
- WATER VALVE
- WATER METER
- CLEANOUT
- GREASE INTERCEPTOR LID
- SANITARY SEWER MANHOLE
- ASPHALT REMOVAL
- CONCRETE CURB AND GUTTER REMOVAL
- CONCRETE SIDEWALK REMOVAL

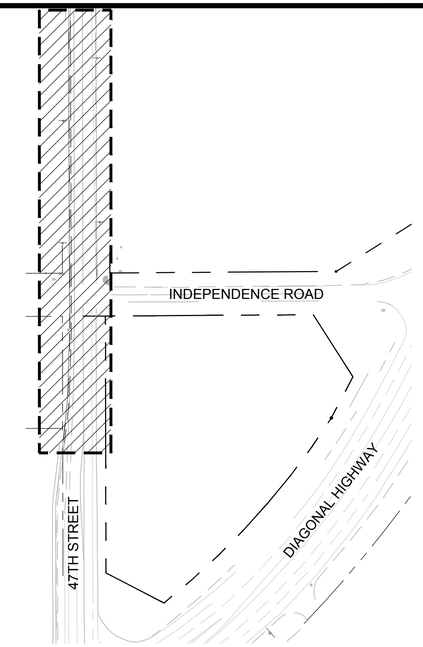

KEY MAP
SCALE: 1"=100'

SCHEDULE OF APPROXIMATE QUANTITIES		
ITEM	UNIT	QUANTITY
ASPHALT PAVEMENT REMOVAL	SF	5,167
CONCRETE CURB AND GUTTER REMOVAL	LF	568
CONCRETE SIDEWALK REMOVAL	SF	2,549

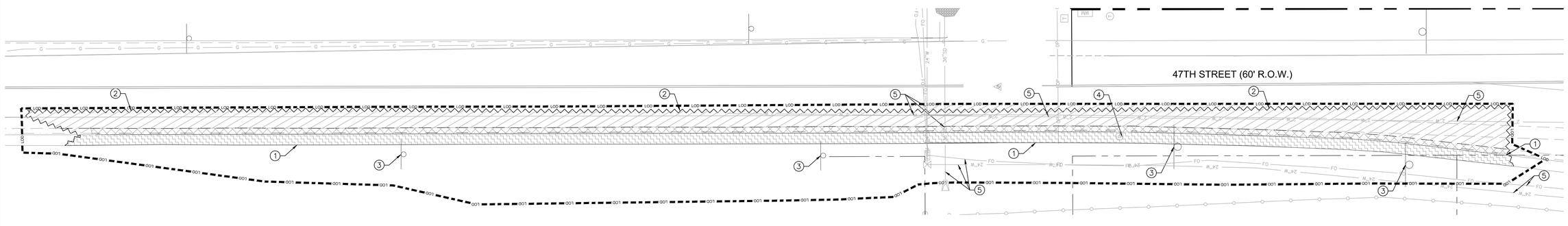

1" = 20'
0' 10' 20' 40'
SCALE IN FEET

CITY APPROVAL STAMP:

OLSSON ASSOCIATES
4690 Table Mountain Drive
Suite 200
Golden, CO 80403
TEL 303.237.2072
FAX 303.237.2659
OA # 012-1417
www.olssonassociates.com

COLORADO LICENSED PROFESSIONAL ENGINEER 06/20/14 42161

Kum & Go
6400 Westown Parkway
West Des Moines, Iowa
50266
P: 515-226-0128
F: 515-223-9873

#943 - BOULDER, COLORADO
3365 DIAGONAL HWY.

ROADWAY DEMOLITION PLAN

KG PROJECT TEAM:
RDR: JXH
SDM: RJH
CPM: TLK

REVISIONS

△	DATE	REVISION DESCRIPTION

DATE: 06-20-2014

SHEET NUMBER:
C4.5
18 OF 32

DWG: F:\Projects\012-1417_LDVP\Final_Plans\121417_RD-DEMO.dwg USER: sbower
DATE: Jul 01, 2014 2:44pm XREFS: 121417_PBASE 121417_TBLK_CD 121417_XBASE
DOCUMENT REVISION DATE: AUGUST 2012

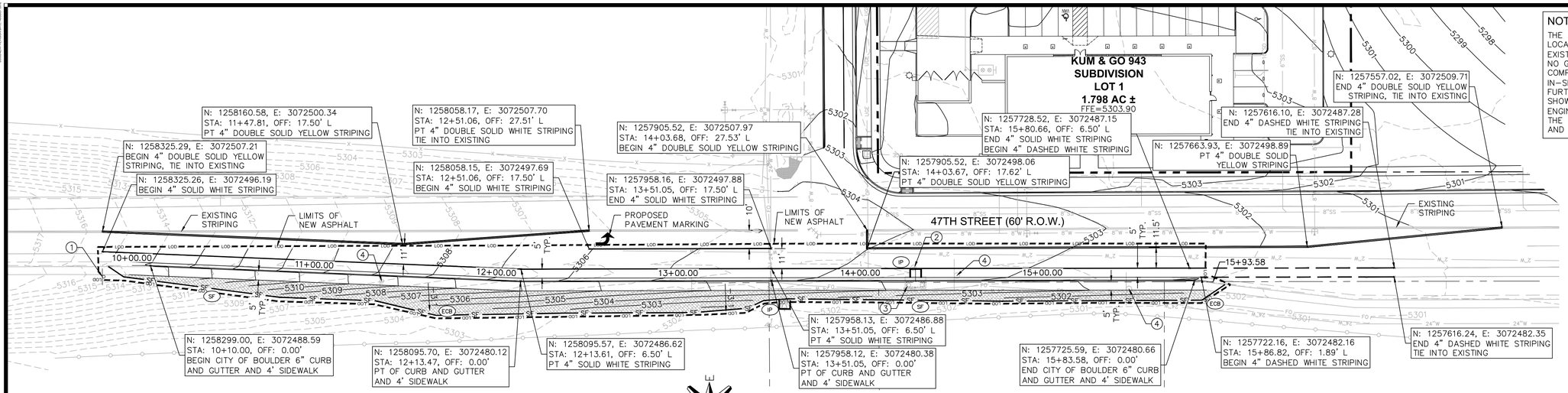

PLAN VIEW
SCALE: 1"=30'

NOTE:

THE UNDERGROUND UTILITIES SHOWN HAVE BEEN LOCATED FROM FIELD SURVEY INFORMATION AND EXISTING DRAWINGS. THE ENGINEER/SURVEYOR MAKES NO GUARANTEES THAT THE UTILITIES SHOWN COMPRISE ALL SUCH UTILITIES IN THE AREA, EITHER IN-SERVICE OR ABANDONED. THE ENGINEER/SURVEYOR FURTHER DOES NOT WARRANT THAT THE UTILITIES SHOWN ARE IN THE EXACT LOCATION INDICATED, THE ENGINEER/SURVEYOR HAS NOT PHYSICALLY LOCATED THE UNDERGROUND UTILITIES. THIS INCLUDES PRIVATE AND PUBLIC UTILITIES.

FLAG NOTES:

1. INSTALL "LEFT LANE MUST TURN LEFT" SIGN
2. CONVERT EXISTING STORM SEWER INLET TO MANHOLE AND INSTALL 7.5 LF OF RCP
3. INSTALL STORM SEWER INLET
4. REMOVE AND RELOCATE EXISTING SIGN

BENCHMARKS:

1. PROJECT BENCHMARK: THE PUBLISHED VALUES OF BOULDER COUNTY PRIMARY MONUMENT CONTROL STATION "B 322 RESET". EL=5508.90' (NAVD88), N:1272428.69, E:3061900.56
2. SITE BENCHMARK: 3" ALUMINUM CAP LOCATED IN THE INTERSECTION OF 47TH STREET AND INDEPENDENCE ROAD. EL=5304.38' (NAVD88), N:1257929.36, E:3072507.66

BASIS OF BEARINGS:

BEARINGS ARE BASED ON THE WEST LINE OF THE NW1/4 OF SECTION 21 AS HAVING A BEARING OF N00°06'56"W FROM THE W1/4 CORNER BEING MONUMENTED WITH A 3" ALUMINUM CAP TO THE W-N1/16 CORNER BEING ALSO MONUMENTED WITH A 3" ALUMINUM CAP AS SHOWN HEREON.

NOTES:

1. UTILITY CONSTRUCTION AND MATERIALS SHALL COMPLY WITH THE CITY OF BOULDER DESIGN AND CONSTRUCTION STANDARDS.
2. BIKE LANE TO BE STRIPED PER CITY OF BOULDER STANDARDS.
3. NEW ASPHALT PAVING TO MATCH EXISTING THICKNESS AND SUBGRADE.

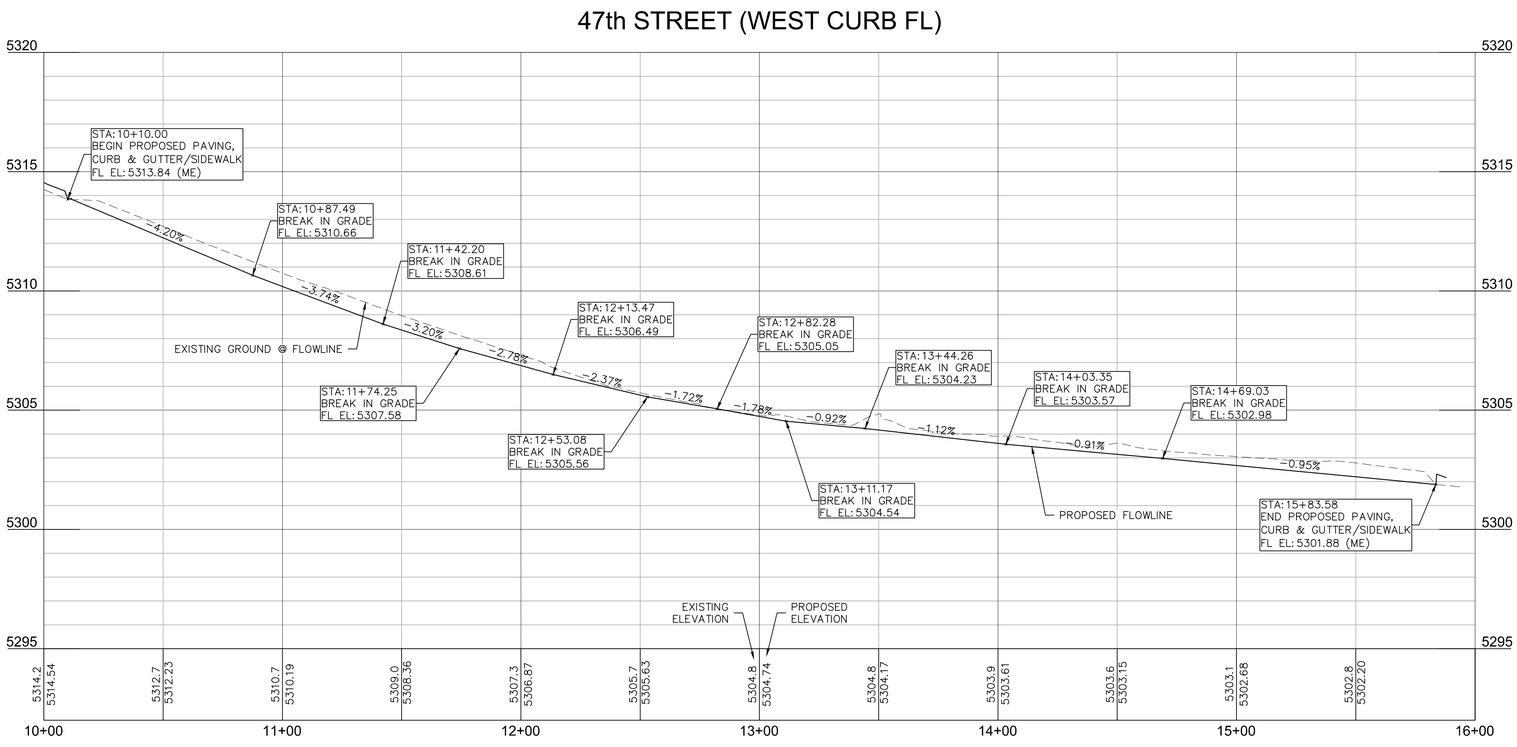

PROFILE VIEW
HORIZONTAL SCALE: 1"=30'
VERTICAL SCALE: 1"=3'

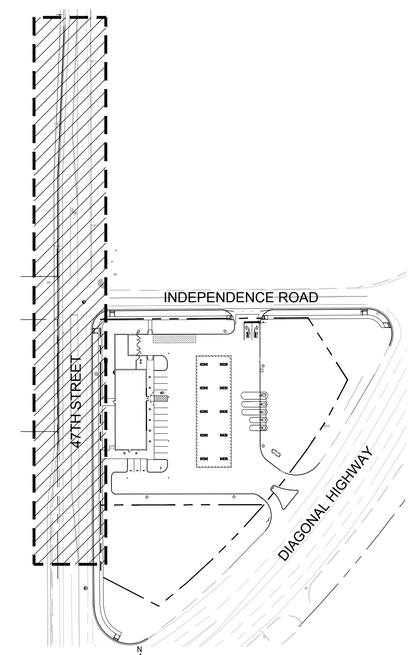

KEY MAP
SCALE: 1"=100'

LEGEND

- PROPERTY LINE
- BOUNDARY LINE
- EXISTING EDGE OF ASPHALT
- PROPOSED CONCRETE CURB AND GUTTER
- LIMITS OF NEW PAVEMENT
- EXISTING CONTOUR
- PROPOSED MAJOR CONTOUR
- PROPOSED MINOR CONTOUR
- SANITARY SEWER
- STORM SEWER
- UNDERGROUND POWER
- WATER LINE
- EXISTING FIBER OPTIC LINE
- SF — INSTALL SILT FENCE, SEE SHEET C2.5
- IP — INSTALL INLET PROTECTION, SEE SHEET C2.4
- ECB — INSTALL EROSION CONTROL BLANKET, SEE SHEET C2.4
- SIGN
- BENCHMARK/CONTROL POINT
- POWER POLE
- EXISTING CURB INLET
- EXISTING FLARED END SECTION
- FIRE HYDRANT
- WATER VALVE
- WATER METER
- CLEANOUT
- GREASE INTERCEPTOR LID
- SANITARY SEWER MANHOLE

CITY APPROVAL STAMP:

OLSSON ASSOCIATES
4690 Table Mountain Drive
Suite 200
Golden, CO 80403
TEL 303.237.2072
FAX 303.237.2659
OA # 012-1417
www.olssonassociates.com

COLORADO LICENSED
PROF. ENGINEER
JOSHUA E. RAMAKER
06/20/14
42161
PROFESSIONAL ENGINEER

Kum & Go

6400 Westown Parkway
West Des Moines, Iowa
50266
P: 515-226-0128
F: 515-223-9873

#943 - BOULDER, COLORADO
3365 DIAGONAL HWY.

ROADWAY PLAN AND PROFILE

KG PROJECT TEAM:
RDR: JXH
SDM: RJH
CPM: TLK

REVISIONS

	DATE	REVISION DESCRIPTION

DATE: 06-20-2014

SHEET NUMBER:
C4.6
19 OF 32

DWG: F:\Projects\012-1417_LDVP\Final_Plans\121417_ROPP.dwg USER: sbower
DATE: Jul 01, 2014 2:45pm XREFS: 121417_PBASE 121417_TBLK_CD 121417_XBASE

DOCUMENT REVISION DATE AUGUST 2012

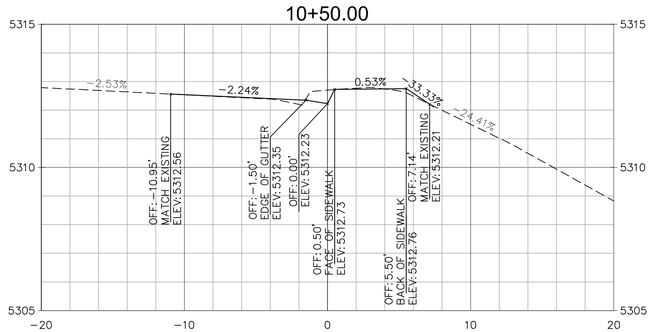

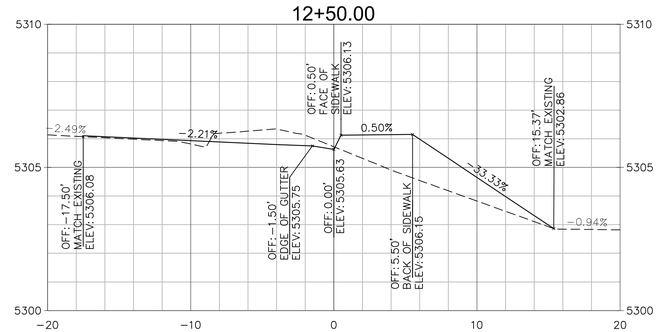

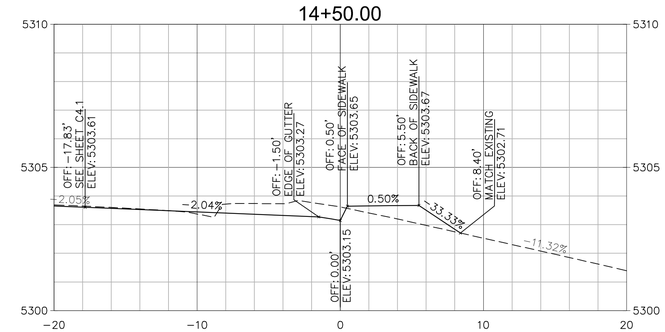

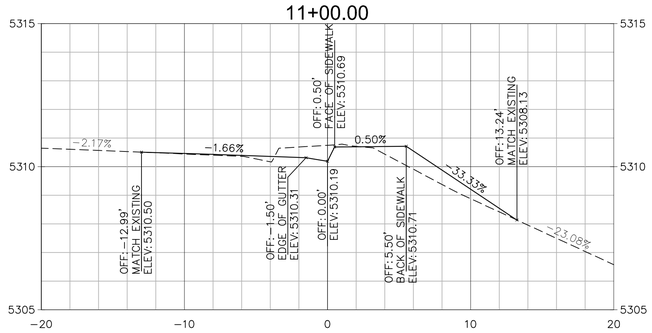

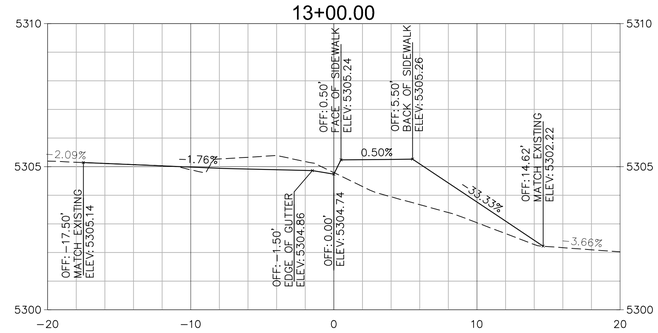

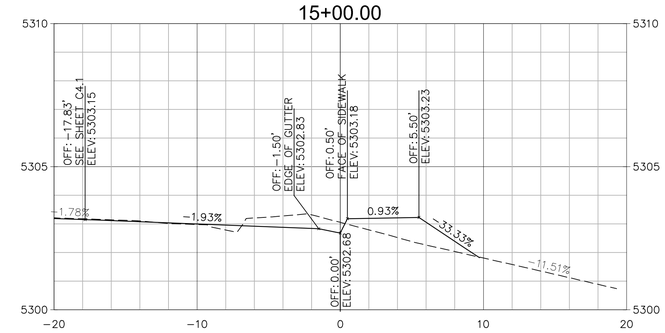

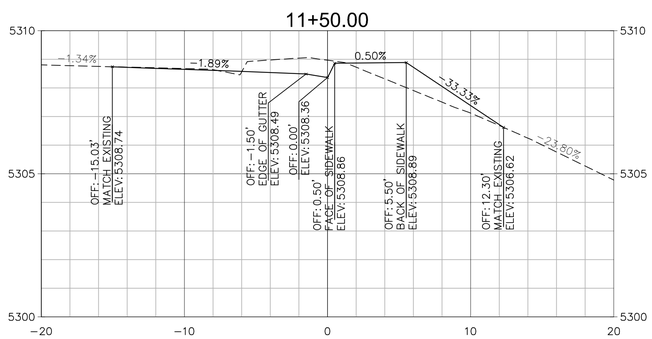

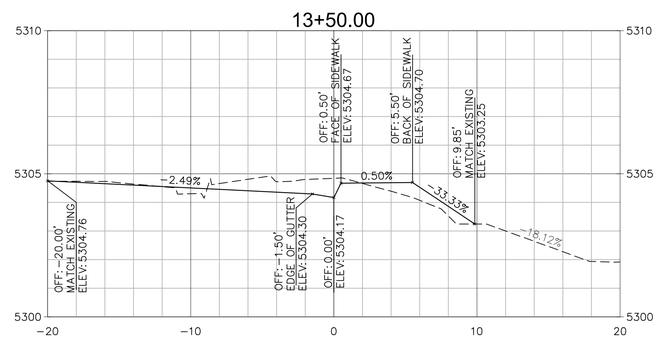

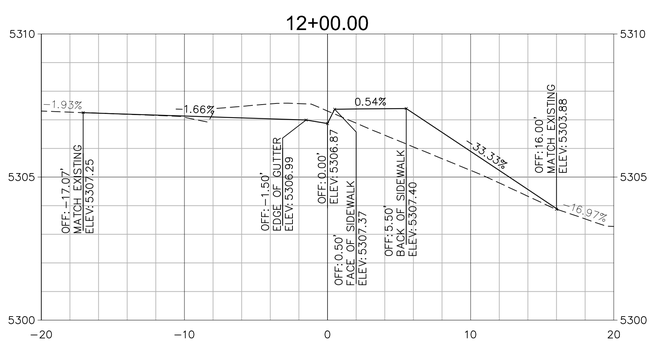

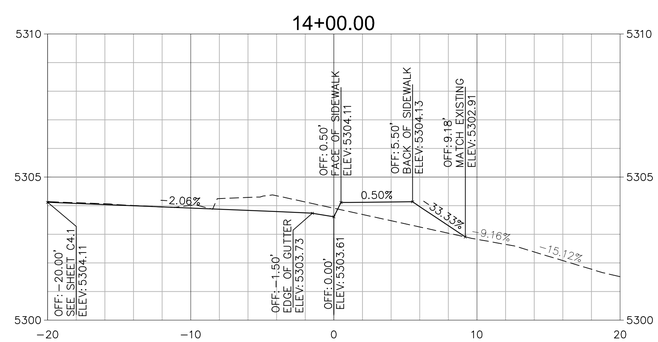

CITY APPROVAL STAMP:

OLSSON ASSOCIATES
4690 Table Mountain Drive
Suite 200
Golden, CO 80403
TEL 303.237.2072
FAX 303.237.2659
OA # 012-1417
www.olsson-associates.com

COLORADO LICENSED PROFESSIONAL ENGINEER JOHN EBRAMOWICZ 06/20/14 42161

Kum & Go

6400 Westown Parkway
West Des Moines, Iowa
50266
P: 515-226-0128
F: 515-223-9873

#943 - BOULDER, COLORADO
3365 DIAGONAL HWY.

ROADWAY CROSS SECTIONS

KG PROJECT TEAM:
RDR: JXH
SDM: RJH
CPM: TLK

REVISIONS

△	DATE	REVISION DESCRIPTION

DATE: 06-20-2014

SHEET NUMBER:
C4.7
20 OF 32

DWG: F:\Projects\012-1417_LDVP\Final_Plans\121417_RDPP.dwg USER: sbower
DATE: Jul 01, 2014 2:45pm XREFS: 121417_PBASE 121417_TBLK_CD 121417_XBASE

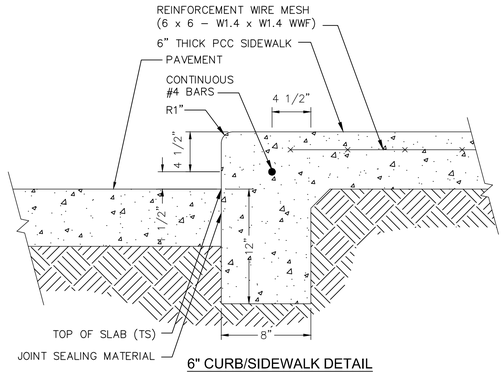

6" CURB/SIDEWALK DETAIL
NOT TO SCALE

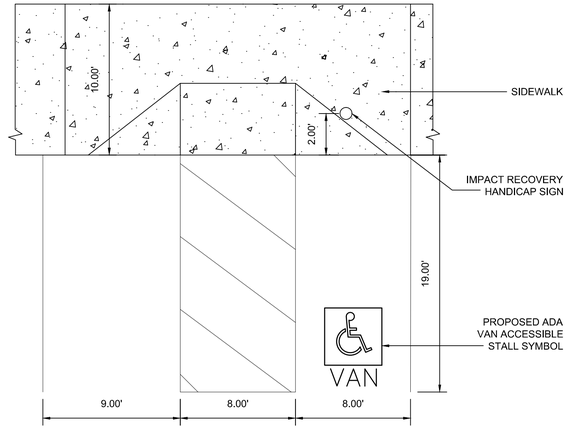

NOTES:
1. ALL ACCESSIBLE STALL PAVEMENT MARKINGS SHALL BE 4" WIDE YELLOW STRIPES.
2. ACCESSIBLE AISLE SHALL BE 8' WIDE FOR VANS.
3. ACCESSIBLE PARKING AREA SURFACE SHALL NOT EXCEED 2% SLOPE IN ANY DIRECTION.
4. A SIGN MUST MARK ACCESSIBLE PARKING. THE SYMBOL ON THE PAVEMENT IS NOT ADEQUATE.

ACCESSIBLE FRONT PARKING STALL
NOT TO SCALE

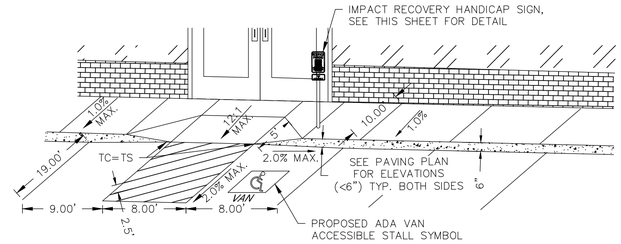

NOTES:
1. ALL ACCESSIBLE STALL PAVEMENT MARKINGS SHALL BE 4" WIDE YELLOW STRIPES.
2. ACCESSIBLE PARKING AREA SURFACE SHALL NOT EXCEED 2% SLOPE IN ANY DIRECTION.
3. A SIGN MUST MARK ACCESSIBLE PARKING. THE SYMBOL ON THE PAVEMENT IS NOT ADEQUATE.
4. ACCESSIBLE AISLE SHALL BE 8' WIDE FOR VANS.

BUILDING FRONT RAMP & PARKING STALL
NOT TO SCALE

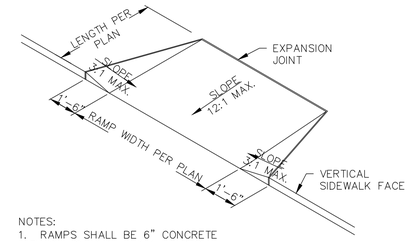

NOTES:
1. RAMPS SHALL BE 6" CONCRETE WITH 6 x 6 W1.4 x W1.4 WELDED WIRE FABRIC.

ADA CURB RAMP (TYPE 1) DETAIL
NOT TO SCALE

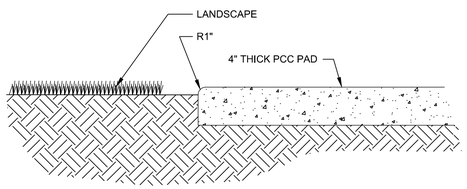

4" CONCRETE PAD DETAIL
NOT TO SCALE

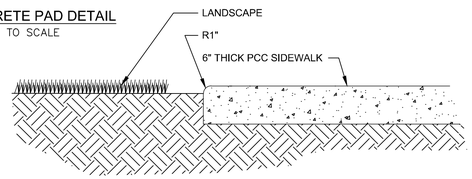

6" CONCRETE SITE SIDEWALK DETAIL
NOT TO SCALE

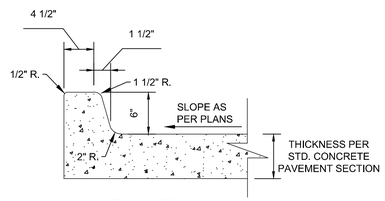

6" STANDARD CURB
NOT TO SCALE

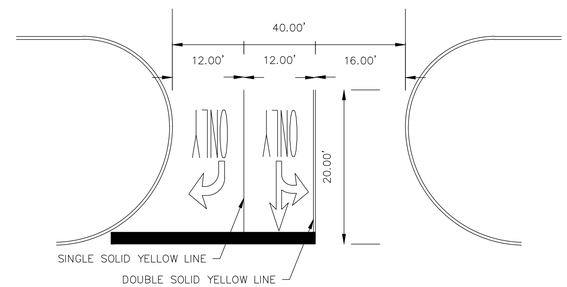

DRIVEWAY MARKING DETAIL
NOT TO SCALE

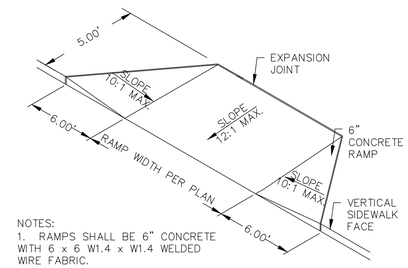

NOTES:
1. RAMPS SHALL BE 6" CONCRETE WITH 6 x 6 W1.4 x W1.4 WELDED WIRE FABRIC.

ADA CURB RAMP (TYPE 2) DETAIL
NOT TO SCALE

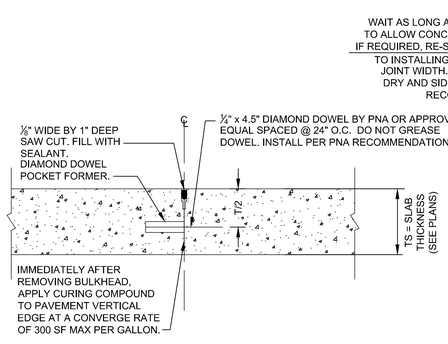

CONSTRUCTION JOINT

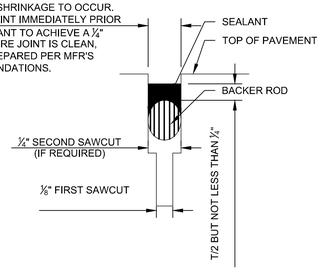

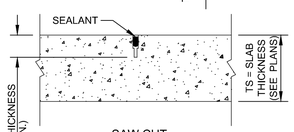

SAW CUT

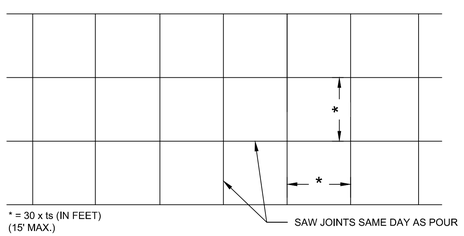

PLAN VIEW

CONCRETE JOINTS
NOT TO SCALE

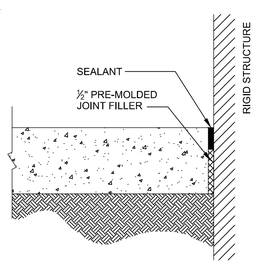

ISOLATION JOINT

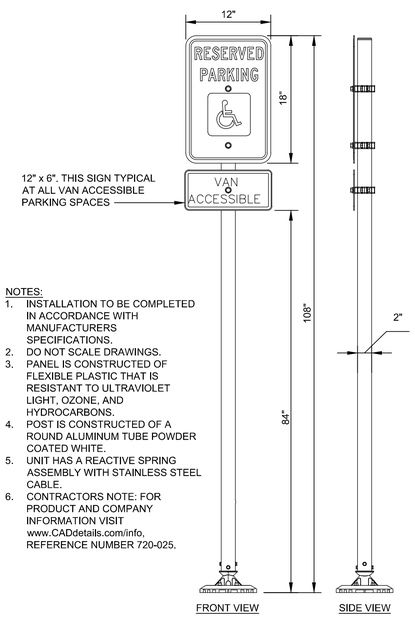

NOTES:
1. INSTALLATION TO BE COMPLETED IN ACCORDANCE WITH MANUFACTURERS SPECIFICATIONS.
2. DO NOT SCALE DRAWINGS.
3. PANEL IS CONSTRUCTED OF FLEXIBLE PLASTIC THAT IS RESISTANT TO ULTRAVIOLET LIGHT, OZONE, AND HYDROCARBONS.
4. POST IS CONSTRUCTED OF A ROUND ALUMINUM TUBE POWDER COATED WHITE.
5. UNIT HAS A REACTIVE SPRING ASSEMBLY WITH STAINLESS STEEL CABLE.
6. CONTRACTORS NOTE: FOR PRODUCT AND COMPANY INFORMATION VISIT www.CADdetails.com/info, REFERENCE NUMBER 720-025.

IMPACT RECOVERY HANDICAP SIGN
NOT TO SCALE

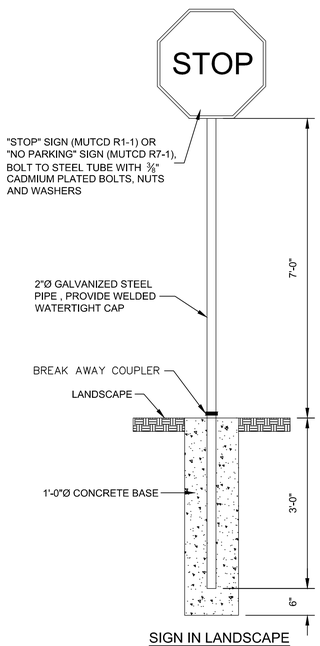

SIGN IN LANDSCAPE
NOT TO SCALE

NAGLE SIGNS INC. ◆ 1-800-728-4604 ◆

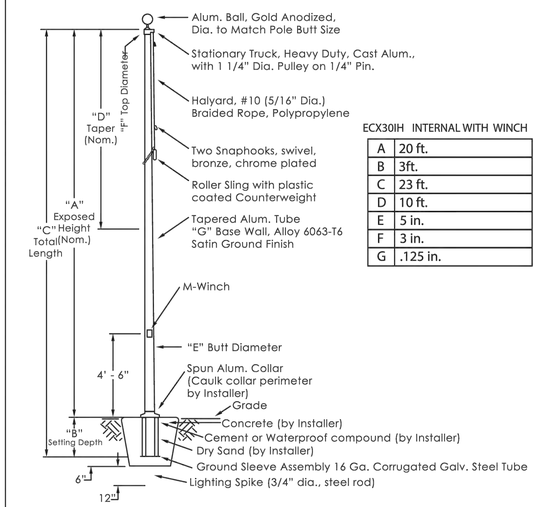

ECX30IH INTERNAL WITH WINCH

A	20 ft.
B	3ft.
C	23 ft.
D	10 ft.
E	5 in.
F	3 in.
G	.125 in.

CUSTOMER NAME: Kum & Go DATE:
POLE SECTIONS: 1 QUANTITY 1 FINISH Satin Finish

20' FLAG POLE
NOT TO SCALE

OLSSON ASSOCIATES
4690 Table Mountain Drive
Suite 200
Golden, CO 80403
TEL 303.237.2072
FAX 303.237.2659
OA # 012-1417
www.olssonassociates.com

COLORADO LICENSED PROFESSIONAL ENGINEER 06/20/14 42161

Kum & Go

6400 Westown Parkway
West Des Moines, Iowa
50266
P: 515-226-0128
F: 515-223-9873

#943 - BOULDER, COLORADO
3365 DIAGONAL HWY.

CONSTRUCTION DETAILS

KG PROJECT TEAM:
RDR: JXH
SDM: RJH
CPM: TLK

REVISIONS

DATE	REVISION DESCRIPTION

DATE: 06-20-2014

SHEET NUMBER:
C5.1
21 OF 32

DOCUMENT REVISION DATE AUGUST 2012
DWG: F:\Projects\012-1417_LDVP\Final_Plans\121417_DTL.dwg USER: sbower
DATE: Jul 01, 2014 2:45pm XREFS: 121417_TBLK_CD 602 517c 517b 517d 121417_XBASE 121417_PBASE

ITEM	DESCRIPTION
1	4" ABS INLET PIPE*
2	4"x4"x2" TEE WITH 2" PIPE TO BUILDING VENT*
3	THREADED C/O CAP JOSAM 58860 OR APP EQUAL**
4	CONCRETE PAD
5	4"x4"x4" TWO-WAY CLEANOUT TEE*
6	4" ABS OUTLET*
7	4" – 6" GRAVEL BEDDING
8	HEAVY-DUTY CAST IRON FRAME AND COVER ***
9	CONCRETE ADJUSTMENT RINGS
10	REINFORCE AS REQUIRED FOR SERVICE CONDITIONS
11	4" ABS 90° ELBOW*
12	4" ABS TEE*
13	A-LOK OR PRESS SEAL PSX PIPE/WALL CONNECTOR
14	2" VENT PIPE (IDENTIFY PIPE TYPE, CLASS & JOINT AS REQUIRED FOR PROJECT)
15	STAINLESS STEEL PIPE SUPPORT CLAMP ****

* SHOW ONLY PIPE ARRANGEMENT REQUIRED FOR SPECIFIC PROJECT INSTALLATION.

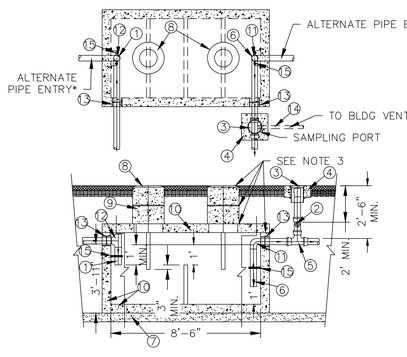

*6" PIPE MAY BE SUBSTITUDED TO MATCH UPSTREAM PIPE DIAMETER.
**REFER TO CLEAN OUT DETAIL(S) ON STANDARD DETAIL SHEET.
***CLAY & BAILEY 2008 BV OR EQUAL (FROST PROOF COVERS OPTIONAL)
****FM STAINLESS FASTNERS #63 OR EQUAL. 1/2"x2-1/2" SS BRACKET W/ 1/2"x1-1/2" FULLY THREADED SS HEX BOLT WITH 1/2" SS WASHER AND 1/2"x1-3/4" SS ANCHORS. CLAMP TO BE FACTORY INSTALLED.

NOTES:
1. THREE COVERS AND RISERS SHOWN. TWO COVERS AND RISERS CENTERED OVER UPPER TWO BAFFLES ARE OPTIONAL.
2. INTERCEPTOR SIZE – 1000 GAL MINIMUM (REVISE THE SIZE DIMENSIONS, AS NEEDED, FOR LARGER CAPACITY INTERCEPTORS)
3. ALL JOINTS AT THE FRAME & COVER*, CONCRETE ADJUSTMENT RINGS AND THE LID OF THE INTERCEPTOR SHALL BE SEALED WITH A MINIMUM OF TWO (2) ROWS OF 3/4 TO 1 INCH PREFORMED BUTYL JOINT SEALER AND A 6" BUTYL JOINT WRAP AROUND SLEEVE (EZ WRAP). THE ENDS OF THE 6" EZ WRAP SHALL OVERLAP BY 12".
4. PIPING ON THE INTERIOR OF THE INTERCEPTOR SHALL BE ABS WITH SOLVENT-CEMENTED JOINTS.
5. GREASE INTERCEPTOR INCLUDING ADJUSTMENT RINGS AND CASTINGS SHALL BE VACUUM TESTED FOR WATER TIGHTNESS AFTER THE BACKFILL OPERATIONS HAVE BEEN COMPLETED IN ACCORDANCE WITH JCW TECHNICAL SPECIFICATIONS. A VACUUM OF 10 INCHES OF MERCURY SHALL BE DRAWN AND WITH THE VACUUM PUMP SHUT OFF THE MERCURY SHALL NOT DROP BELOW 9 INCHES WITHIN 1 MINUTE OR BELOW 5 INCHES WITHIN 5 MINUTES.

GREASE INTERCEPTOR
NOT TO SCALE

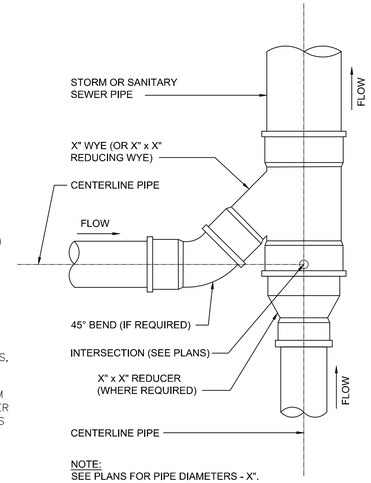

NOTE:
SEE PLANS FOR PIPE DIAMETERS - X".

WYE CONNECTION
NOT TO SCALE

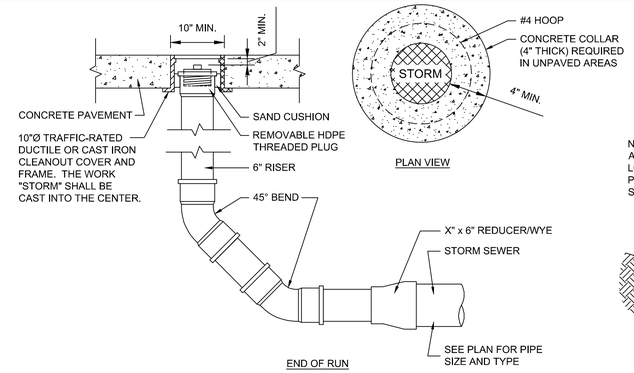

STORM SEWER CLEANOUT
NOT TO SCALE

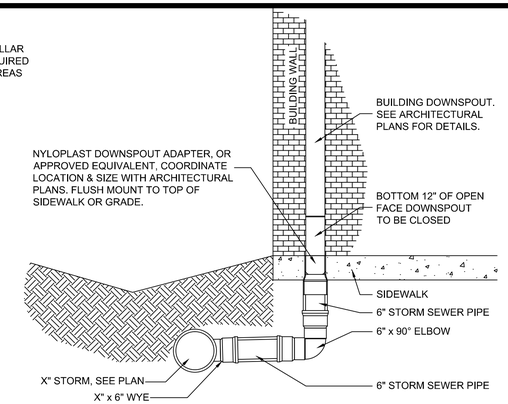

BUILDING DOWNSPOUT CONNECTION DETAIL
NOT TO SCALE

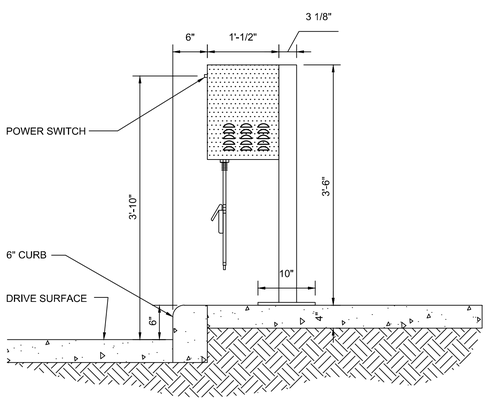

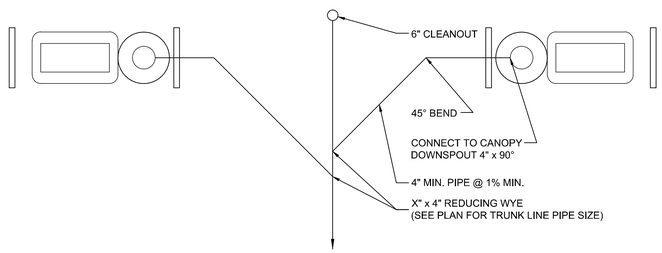

CANOPY DRAIN CONNECTION
NOT TO SCALE

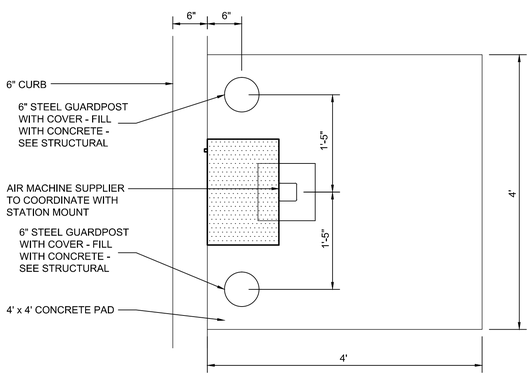

PEDESTAL-MOUNTED AIR MACHINE
NOT TO SCALE

NOTE:
REFER TO CANOPY STRUCTURAL DRAWINGS FOR FINAL DETAIL. TYPICAL CONNECTION IS SHOWN.

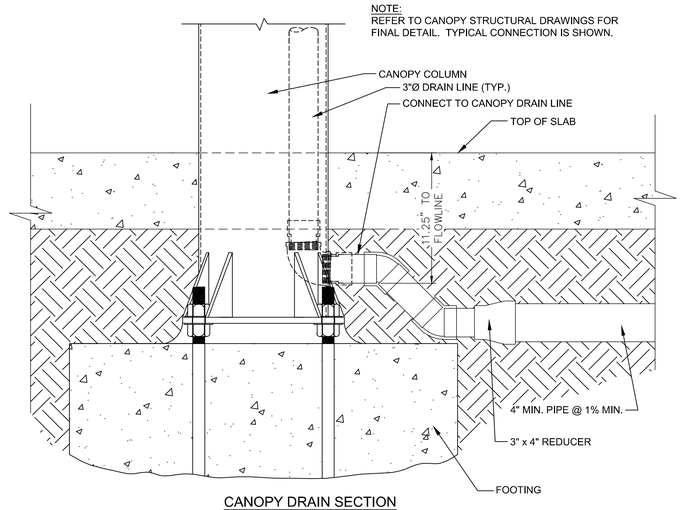

CANOPY DRAIN SECTION
NOT TO SCALE

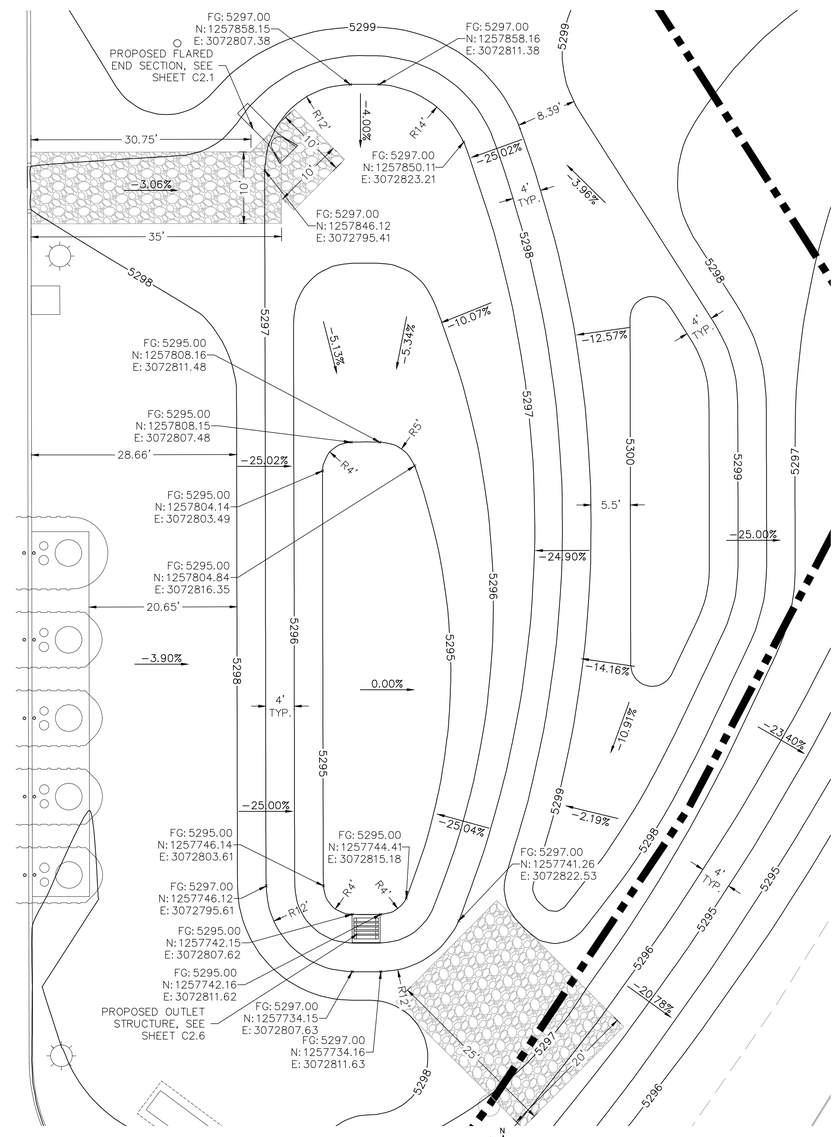

POND DETAIL
SCALE: 1"=10'

OLSSON ASSOCIATES
4690 Table Mountain Drive Suite 200 Golden, CO 80403
TEL 303.237.2072 FAX 303.237.2659
OA # 012-1417
www.olssonassociates.com

COLORADO LICENSED PROFESSIONAL ENGINEER 06/20/14 42141

Kum & Go
6400 Westown Parkway
West Des Moines, Iowa
50266
P: 515-226-0128
F: 515-223-9873

#943 - BOULDER, COLORADO
3365 DIAGONAL HWY.

CONSTRUCTION DETAILS

KG PROJECT TEAM:
RDR: JXH
SDM: RJH
CPM: TLK

REVISIONS

DATE	REVISION DESCRIPTION

DATE: 06-20-2014

SHEET NUMBER:
C5.2
22 OF 32

DOCUMENT REVISION DATE AUGUST 2012
DWG: F:\Projects\012-1417_LDVP\Final_Plans\121417_DTL.dwg USER: sbower
DATE: Jul 01, 2014 2:45pm XREFS: 121417_TBLK_CD 602 604 517c 517b 517d 121417_XBASE 121417_PBASE

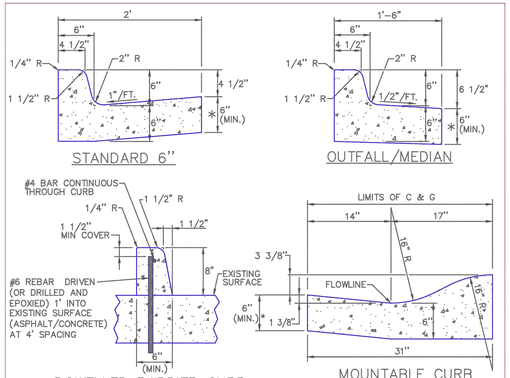

NOTES:

1. ALL EXPOSED CONCRETE SHALL HAVE A BROOM FINISH.
2. EXPANSION JOINTS SHALL BE INSTALLED AT 500 FOOT MAXIMUM INTERVALS SEE EXPANSION JOINT DETAIL.
3. CONTRACTION JOINTS SHALL BE INSTALLED AT END OF CURB RETURNS AND AT 10 FOOT MAXIMUM INTERVALS – SEE CURB CONTRACTION JOINT DETAIL.
4. WHEN JOINING EXISTING CURB, PROVIDE A MINIMUM OF THREE #4 x 18" DOWELS (9" EMBEDMENT) EVENLY SPACED.
5. * WHEN PLACING CURB ADJACENT TO CONCRETE PAVEMENT, THICKEN GUTTER TO MATCH PAVEMENT DEPTH.

DRAWN BY: JSH CHECKED BY: RJH APPROVED BY: DIRECTOR OF PUBLIC WORKS	CITY OF BOULDER, COLORADO CURB AND GUTTER	ISSUED: JULY 2, 1998 REVISED: OCT 6, 2009 DRAWING NO. 2.01.A

NOTES:

1. ALL EXPOSED CONCRETE SHALL HAVE A BROOM FINISH.
2. EXPANSION JOINTS SHALL BE INSTALLED AT 500 FOOT MAXIMUM INTERVALS AND AT FIXED STRUCTURES (INLETS, BUILDINGS). SEE CONCRETE WALK AND MULTI-USE PATH JOINT DETAILS.
3. CONTRACTION JOINTS SHALL BE INSTALLED AT 5 FOOT INTERVALS OR INTERVALS EQUAL TO SIDEWALK WIDTH. SEE CONCRETE WALK AND MULT-USE PATH JOINT DETAILS.
4. IF SIDEWALK IS PLACED ADJACENT TO CURB AND GUTTER, CONTRACTION JOINTS SHALL LINE UP WITH CURB AND GUTTER JOINTS.
5. LONGITUDINAL JOINTS ARE NOT ALLOWED IN CONCRETE WALK OR MULTI-USE PATH.

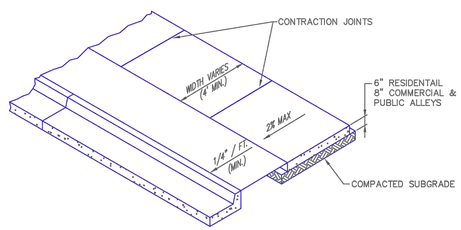

DRAWN BY: JSH CHECKED BY: WGH APPROVED BY: DIRECTOR OF PUBLIC WORKS	CITY OF BOULDER, COLORADO CONCRETE WALK AND MULTI-USE PATHS	ISSUED: JULY 2, 1998 REVISED: OCT 6, 2009 DRAWING NO. 2.02.A

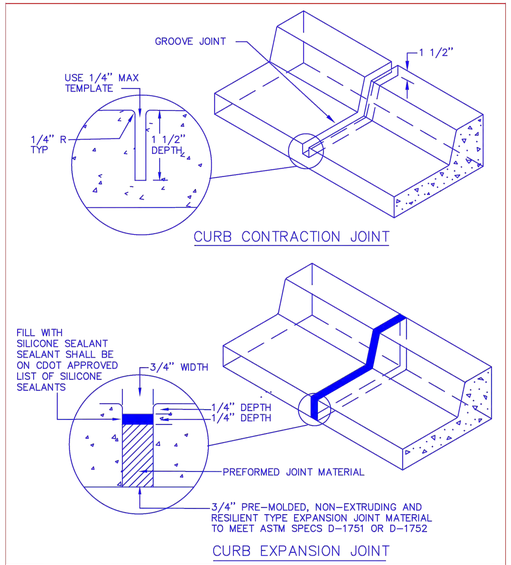

DRAWN BY: JSH CHECKED BY: WGH APPROVED BY: DIRECTOR OF PUBLIC WORKS	CITY OF BOULDER, COLORADO CURB AND GUTTER JOINTS	ISSUED: JULY 2, 1998 REVISED: OCT 6, 2009 DRAWING NO. 2.01.B

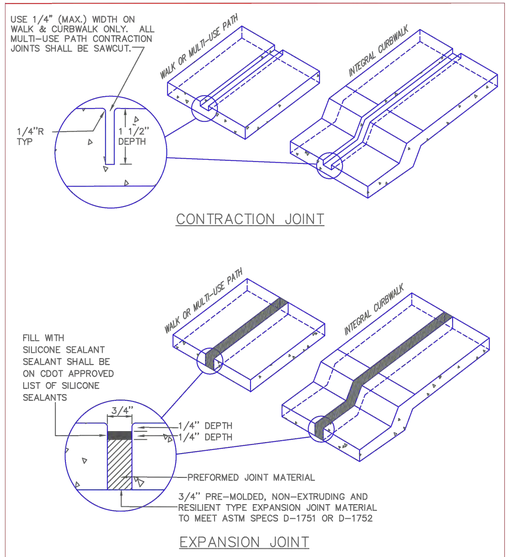

DRAWN BY: JSH CHECKED BY: WGH APPROVED BY: DIRECTOR OF PUBLIC WORKS	CITY OF BOULDER, COLORADO CONCRETE WALK AND MULTI-USE PATH JOINTS	ISSUED: JULY 2, 1998 REVISED: OCT 6, 2009 DRAWING NO. 2.02.C

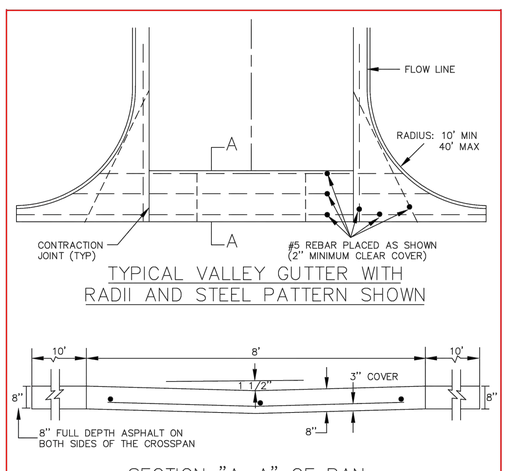

NOTES:

1. THE LONGITUDINAL GRADE ALONG THE FLOWLINE OF THE CURB RETURN SHALL BE 0.50% MINIMUM.
2. WHEN CONSTRUCTING DIFFERENT WIDTH STREETS, REINFORCING STEEL LENGTHS WILL CHANGE ACCORDINGLY BUT THE PATTERN WILL REMAIN THE SAME.

DRAWN BY: JSH CHECKED BY: RJH APPROVED BY: DIRECTOR OF PUBLIC WORKS	CITY OF BOULDER, COLORADO CROSSPAN AND RADII CURB RETURN ACCESSES	ISSUED: JULY 2, 1998 REVISED: OCT. 17, 2000 DRAWING NO. 2.03

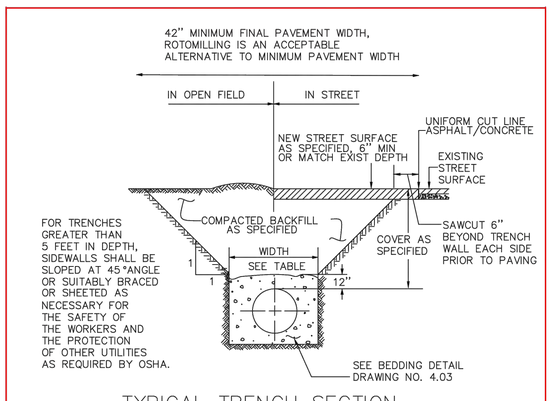

NOTES:

1. PAVING SHALL COMPLY WITH CITY OF BOULDER SPECIFICATIONS.
2. MINIMUM COVER TO BE BELOW OFFICIAL STREET GRADE.
3. MINIMUM DISTANCE BETWEEN EDGE OF TRENCH AND EDGE OF ASPHALT, OR LIP OF CURBLINE, SHALL BE 3 FEET.
4. REFER TO DRAWING NO. 4.04 FOR PAVEMENT RESTORATION FOR PAVEMENT LESS THAN 3 YEARS OLD.
5. ON STATE HIGHWAYS, REFER TO CDOT UTILITY REQUIREMENTS.

TRENCH WIDTH

PIPE DIAMETER	MINIMUM WIDTH	MAXIMUM WIDTH
6"	1'-6"	2'-6"
8"	1'-8"	2'-8"
12"	2'-0"	3'-0"
16"	2'-4"	3'-4"
20"	2'-8"	3'-8"
24"	3'-0"	4'-0"

DRAWN BY: JSH CHECKED BY: RJH APPROVED BY: DIRECTOR OF PUBLIC WORKS	CITY OF BOULDER, COLORADO UTILITY TRENCH WIDER THAN 16"	ISSUED: JULY 2, 1998 REVISED: OCT. 17, 2000 DRAWING NO. 4.02

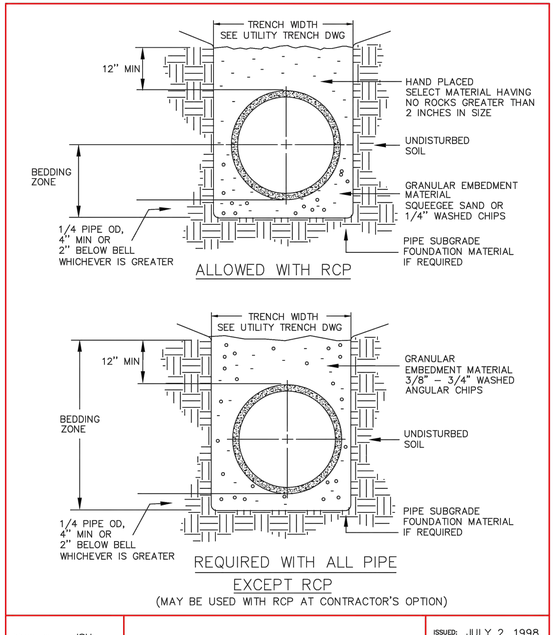

DRAWN BY: JSH CHECKED BY: RJH APPROVED BY: DIRECTOR OF PUBLIC WORKS	CITY OF BOULDER, COLORADO PIPE BEDDING	ISSUED: JULY 2, 1998 REVISED: OCT. 17, 2000 DRAWING NO. 4.03

OLSSON ASSOCIATES
4690 Table Mountain Drive Suite 200 Golden, CO 80403
TEL 303.237.2072 FAX 303.237.2659
OA # 012-1417
www.olssonassociates.com

COLORADO LICENSED PROFESSIONAL ENGINEER JOSE EBRAMOUNTE 06/20/14 42161

Kum & Go

6400 Westown Parkway
West Des Moines, Iowa
50266
P: 515-226-0128
F: 515-223-9873

#943 - BOULDER, COLORADO
3365 DIAGONAL HWY.

CONSTRUCTION DETAILS

KG PROJECT TEAM:
RDR: JXH
SDM: RJH
CPM: TLK

REVISIONS

△	DATE	REVISION DESCRIPTION

DATE: 06-20-2014

SHEET NUMBER:
C5.3
23 OF 32

DOCUMENT REVISION DATE AUGUST 2012
DWG: F:\Projects\012-1417_LDVP\Final_Plans\121417_DTL.dwg USER: sbower
DATE: Jul 01, 2014 2:45pm XREFS: 121417_TBLK_CD 602 517c 517b 517d 121417_XBASE 121417_PBASE

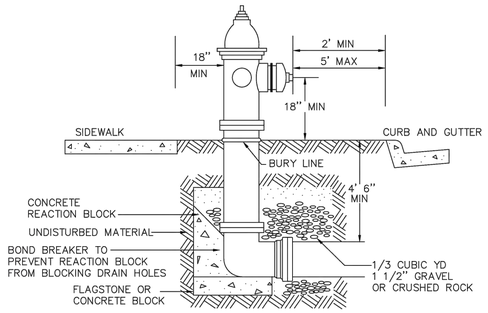

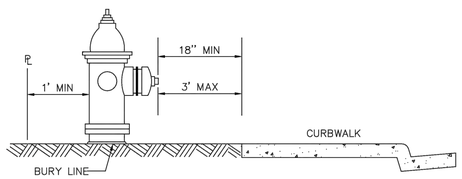

NOTE: FOR FIRE HYDRANT INSTALLATION, SEE DETAIL DRAWING NO. 5.13.

DRAWN BY: JSH
CHECKED BY: RJH
APPROVED BY: DIRECTOR OF PUBLIC WORKS

CITY OF BOULDER, COLORADO

FIRE HYDRANT PLACEMENT

ISSUED: JULY 2, 1998
REVISED: OCT. 17, 2000
DRAWING NO. 5.12

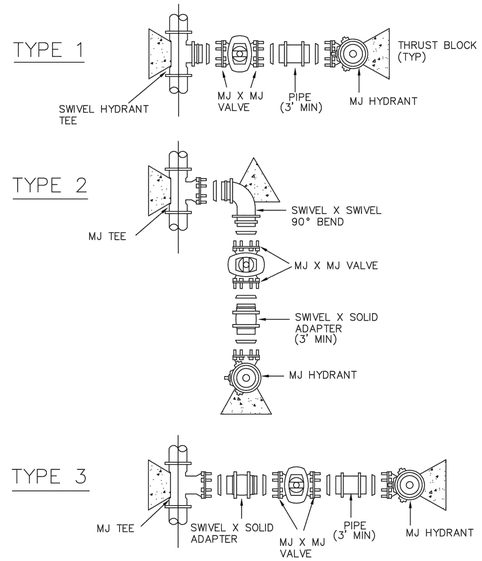

DRAWN BY: JSH
CHECKED BY: RJH
APPROVED BY: DIRECTOR OF PUBLIC WORKS

CITY OF BOULDER, COLORADO

FIRE HYDRANT INSTALLATION TYPES 1, 2 AND 3

ISSUED: JULY 2, 1998
REVISED: OCT. 17, 2000
DRAWING NO. 5.13

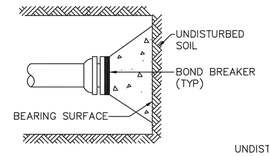

DEAD END

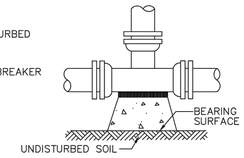

TEE

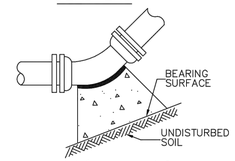

11 1/4°, 22 1/2°, 45° AND 90° BENDS

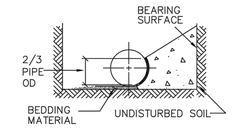

TYPICAL CROSS SECTION

MINIMUM BEARING SURFACE AREA IN SQUARE FEET

SIZE	TEE AND PLUG	90° BEND	45° BEND	22 1/2° BEND	11 1/4° BEND
4"	2.0	2.5	1.5	1.0	1.0
6"	4.0	5.5	3.0	1.5	1.0
8"	6.5	9.0	5.0	2.5	1.5
10"	10.0	14.0	7.5	4.0	2.0
12"	14.0	20.0	11.0	5.5	3.0
14"	19.0	27.0	14.5	7.5	4.0
16"	25.0	35.0	19.0	10.0	5.0
18"	31.5	44.5	24.0	12.5	6.5
20"	38.0	54.5	29.5	15.0	7.5
24"	55.5	78.5	42.5	22.0	11.0

NOTES:

1. BASED ON 250 PSI MAXIMUM PRESSURE AND 2000 LBS/FT² BEARING CAPACITY.
2. ALL FITTINGS MUST BE WRAPPED WITH POLYETHYLENE TO PREVENT CONCRETE FROM ADHERING TO BOLTS OR PIPES.
3. MAXIMUM JOINT DEFLECTION WITHOUT REACTION BLOCK IS 1+1/2°.
4. CONCRETE SHALL DEVELOP 3,000 PSI AT 28 DAYS.
5. JOINTS AND BOLTS SHALL BE ACCESSIBLE FOR REPAIRS.

DRAWN BY: JSH
CHECKED BY: RJH
APPROVED BY: DIRECTOR OF PUBLIC WORKS

CITY OF BOULDER, COLORADO

HORIZONTAL THRUST BLOCK

ISSUED: JULY 2, 1998
REVISED: OCT. 17, 2000
DRAWING NO. 5.14

NOTES:

1. SHOULD ANY SITUATION ARISE OTHER THAN SHOWN CONCERNING THE DEPTH OR OBSTRUCTION OF SERVICE LINE OR PLACEMENT OF METER PIT, CALL CITY OF BOULDER ROW INSPECTOR.
2. METER TO BE PLACED IN PUBLIC ROW OR EASEMENT. DO NOT PLACE IN SIDEWALK OR DRIVE.
3. PLACEMENT OF METER PIT SHALL BE 3' FROM CENTERLINE OF LID TO BACK EDGE OF CURBWALK OR IF SIDEWALK IS SEPARATE FROM CURB. METER PIT SHALL BE INSTALLED ON STREET SIDE OF WALK 3' FROM FRONT SIDE OF WALK.
4. METER, METER PIT FITTINGS, AND LID WITH 36" FLANGE FITTINGS SHALL BE PURCHASED FROM THE CITY OF BOULDER.
5. METER SHALL BE INSTALLED BY THE CITY.
6. CORPORATION STOP AND DOUBLE STRAP BRONZE SERVICE SADDLE REQUIRED FOR PVC WATER MAINS.

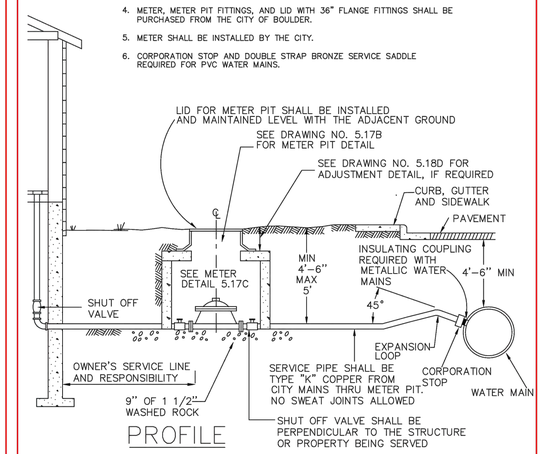

PROFILE

DRAWN BY: JSH
CHECKED BY: RJH
APPROVED BY: DIRECTOR OF PUBLIC WORKS

CITY OF BOULDER, COLORADO

STANDARD 1 1/2" – 2" SERVICE

ISSUED: JULY 2, 1998
REVISED: OCT. 17, 2000
DRAWING NO. 5.17A

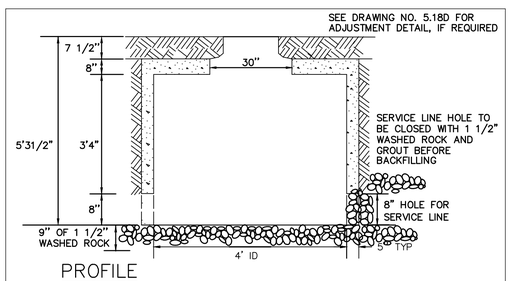

PROFILE

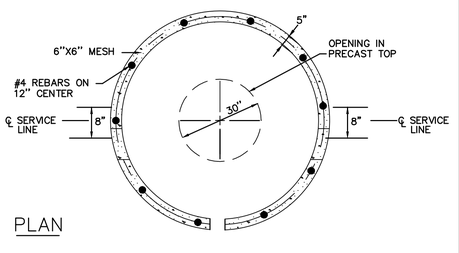

PLAN

NOTE: PRECAST CONCRETE STRUCTURES SHALL MEET ASTM C-478.

DRAWN BY: JSH
CHECKED BY: RJH
APPROVED BY: DIRECTOR OF PUBLIC WORKS

CITY OF BOULDER, COLORADO

STANDARD METER PIT 1 1/2"–2" SERVICE

ISSUED: JULY 2, 1998
REVISED: OCT. 17, 2000
DRAWING NO. 5.17B

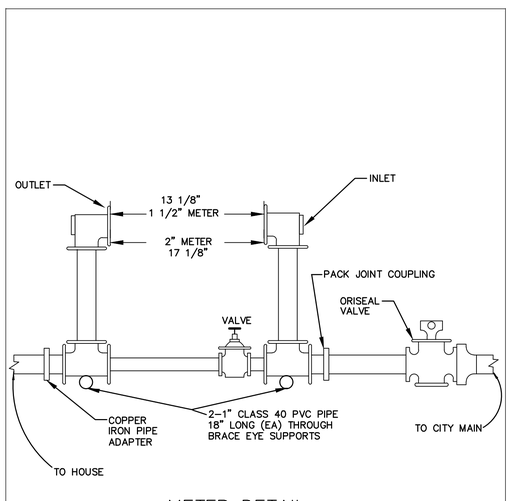

METER DETAIL

DRAWN BY: JSH
CHECKED BY: RJH
APPROVED BY: DIRECTOR OF PUBLIC WORKS

CITY OF BOULDER, COLORADO

STANDARD 1 1/2" –2" METER SETTING

ISSUED: JULY 2, 1998
REVISED: OCT. 17, 2000
DRAWING NO. 5.17C

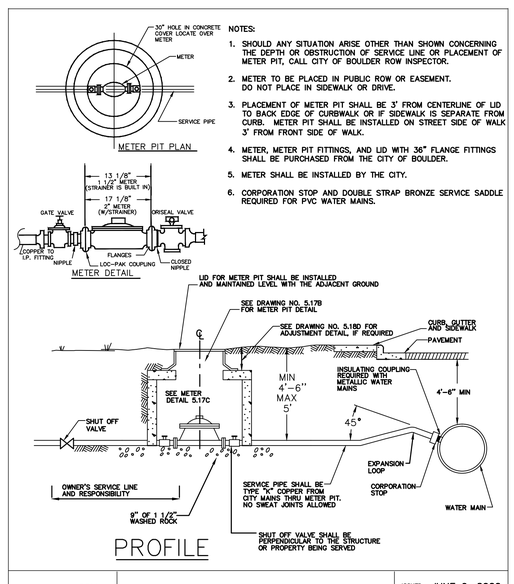

PROFILE

NOTES:

1. SHOULD ANY SITUATION ARISE OTHER THAN SHOWN CONCERNING THE DEPTH OR OBSTRUCTION OF SERVICE LINE OR PLACEMENT OF METER PIT, CALL CITY OF BOULDER ROW INSPECTOR.
2. METER TO BE PLACED IN PUBLIC ROW OR EASEMENT. DO NOT PLACE IN SIDEWALK OR DRIVE.
3. PLACEMENT OF METER PIT SHALL BE 3' FROM CENTERLINE OF LID TO BACK EDGE OF CURBWALK OR IF SIDEWALK IS SEPARATE FROM CURB. METER PIT SHALL BE INSTALLED ON STREET SIDE OF WALK 3' FROM FRONT SIDE OF WALK.
4. METER, METER PIT FITTINGS, AND LID WITH 36" FLANGE FITTINGS SHALL BE PURCHASED FROM THE CITY OF BOULDER.
5. METER SHALL BE INSTALLED BY THE CITY.
6. CORPORATION STOP AND DOUBLE STRAP BRONZE SERVICE SADDLE REQUIRED FOR PVC WATER MAINS.

DRAWN BY: CSM
CHECKED BY: RJH
APPROVED BY: DIRECTOR OF PUBLIC WORKS

CITY OF BOULDER, COLORADO

STANDARD 1 1/2" – 2" IRRIGATION SERVICE

ISSUED: JUNE 9, 2000
REVISED: OCT. 17, 2000
DRAWING NO. 5.17D

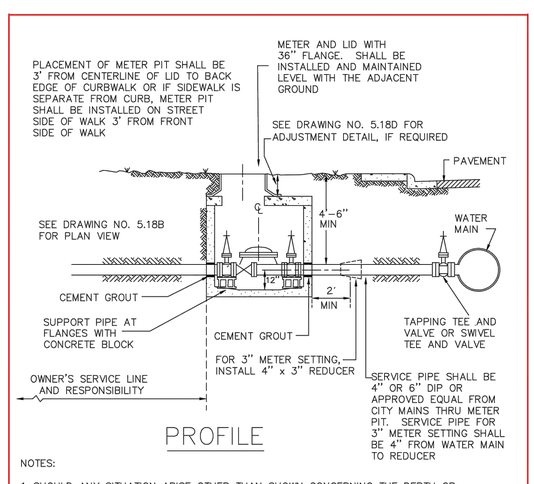

PROFILE

NOTES:

1. SHOULD ANY SITUATION ARISE OTHER THAN SHOWN CONCERNING THE DEPTH OR OBSTRUCTION OF SERVICE LINE OR THE PLACEMENT OF METER PIT, CALL CITY OF BOULDER ROW INSPECTOR.
2. METER TO PLACED IN PUBLIC ROW OR EASEMENT. DO NOT PLACE IN SIDEWALK OR DRIVE.
3. ALL BYPASS VALVES TO BE LOCKED CLOSED.
4. METER, MONITOR COVER WITH FLANGE, RISER AND LID SHALL BE PURCHASED FROM CITY OF BOULDER.

DRAWN BY: JSH
CHECKED BY: RJH
APPROVED BY: DIRECTOR OF PUBLIC WORKS

CITY OF BOULDER, COLORADO

STANDARD 3" AND 4" SERVICE

ISSUED: JULY 2, 1998
REVISED: OCT. 17, 2000
DRAWING NO. 5.18A

OLSSON ASSOCIATES
4690 Table Mountain Drive
Suite 200
Golden, CO 80403
TEL 303.237.2072
FAX 303.237.2659
OA # 012-1417
www.olssonassociates.com

COLORADO LICENSED PROFESSIONAL ENGINEER 06/20/14 42161

Kum & Go

6400 Westown Parkway
West Des Moines, Iowa
50266
P: 515-226-0128
F: 515-223-9873

#943 - BOULDER, COLORADO
3365 DIAGONAL HWY.

CONSTRUCTION DETAILS

KG PROJECT TEAM:
RDR: JXH
SDM: RJH
CPM: TLK

REVISIONS

△	DATE	REVISION DESCRIPTION

DATE: 06-20-2014

SHEET NUMBER:
C5.4
24 OF 32

DWG: F:\Projects\012-1417_LDVP\Final_Plans\121417_DTL.dwg USER: sbower
DATE: Jul 01, 2014 2:45pm XREFS: 121417_TBLK_CD 602 604 517c 517b 517d 121417_XBASE 121417_PBASE
DOCUMENT REVISION DATE AUGUST 2012

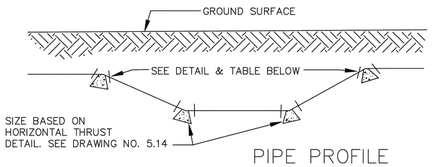

PIPE PROFILE

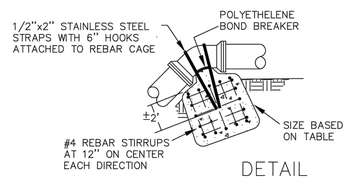

DETAIL

NOTE:
ALL FITTINGS MUST BE WRAPPED WITH POLYETHYLENE TO PREVENT CONCRETE FROM ADHERING TO BOLTS OR PIPE.

REQUIRED CUBIC YARDS OF CONCRETE *			
SIZE	11 1/4° BEND	22 1/2° BEND	45° BEND
4"	0.2	0.3	0.9
6"	0.4	0.7	2.1
8"	0.6	1.3	3.6
10"	1.0	1.9	5.6
12"	1.4	2.7	8.1
14"	1.9	3.8	11.1
16"	2.4	4.9	14.4
18"	3.1	6.2	18.3
20"	3.8	7.6	22.6
24"	5.5	10.7	32.5

* BASED ON 250 PSI MAXIMUM PRESSURE WITH NO SOIL BEARING PRESSURE

DRAWN BY: JSH
CHECKED BY: RJH
APPROVED BY: DIRECTOR OF PUBLIC WORKS

CITY OF BOULDER, COLORADO
VERTICAL THRUST BLOCK

ISSUED: JULY 2, 1998
REVISED: OCT. 17, 2000
DRAWING NO. 5.15

NOTES:
1. 4' MANHOLES SHALL BE USED FOR PIPES UP TO 24" DIAMETER.
2. 5' MANHOLES SHALL BE USED FOR PIPES FROM 27"–36" DIAMETER.
3. SPECIAL MANHOLES SHALL BE USED FOR PIPES LARGER THAN 36" DIAMETER.
4. MANHOLES LESS THAN OR EQUAL TO 6' FROM TOP OF CASTING TO INVERT SHALL HAVE FLAT TOPS WITH CONCENTRIC OPENING. ALL ADJUSTING RINGS, CASTINGS, INVERTS, BOTTOMS, ETC., SHALL BE SIMILAR TO SHOWN MANHOLE.
5. REFER TO SPECIFICATIONS FOR MATERIAL, INSTALLATION, TESTING, BACKFILL AND SURFACE RESTORATION REQUIREMENTS.
6. ECCENTRIC CONES WILL BE ALLOWED IF OPENING IS SET OVER CHANNEL AND STEPS ARE OFFSET TO BENCH INSTEAD OF DIRECTLY OVER CHANNEL.

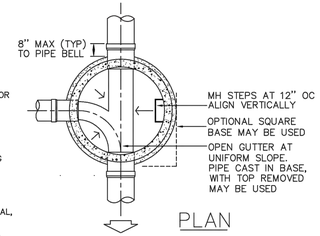

PLAN

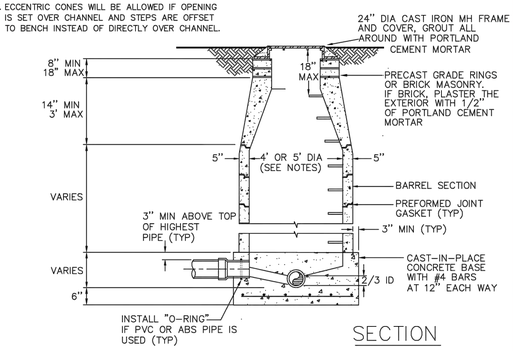

SECTION

DRAWN BY: JSH
CHECKED BY: RJH
APPROVED BY: DIRECTOR OF PUBLIC WORKS

CITY OF BOULDER, COLORADO
STANDARD SEWER MANHOLE

ISSUED: JULY 2, 1998
REVISED: OCT. 17, 2000
DRAWING NO. 6.01

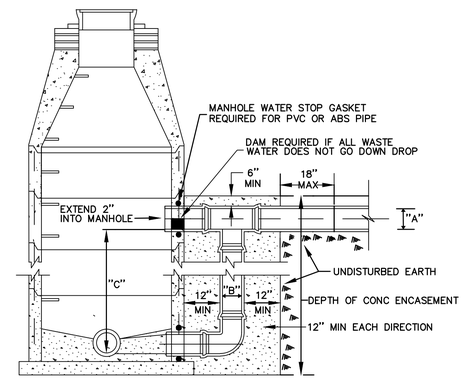

"A" PIPE DIA	"B" PIPE DIA
8"	8"
10"	10"
12"	12"
15"	12"
18"	15"
21"	18"
24"	18"
27"	18"
30"	18"
36"	18"
42"	24"
48"	30"

NOTES:
1. DROP MANHOLES ARE REQUIRED WHEN "C" ≥ 2 FEET.
2. SEE STANDARD SEWER MANHOLE DETAIL DRAWING NO. 6.01.

DRAWN BY: JSH
CHECKED BY: RJH
APPROVED BY: DIRECTOR OF PUBLIC WORKS

CITY OF BOULDER, COLORADO
STANDARD DROP SEWER MANHOLE

ISSUED: JULY 2, 1998
REVISED: OCT. 17, 2000
DRAWING NO. 6.02

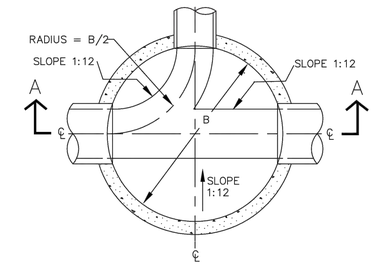

PLAN

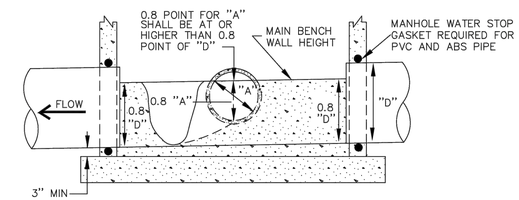

SECTION A–A

DRAWN BY: JSH
CHECKED BY: RJH
APPROVED BY: DIRECTOR OF PUBLIC WORKS

CITY OF BOULDER, COLORADO
MANHOLE INVERT

ISSUED: JULY 2, 1998
REVISED: OCT. 17, 2000
DRAWING NO. 6.03

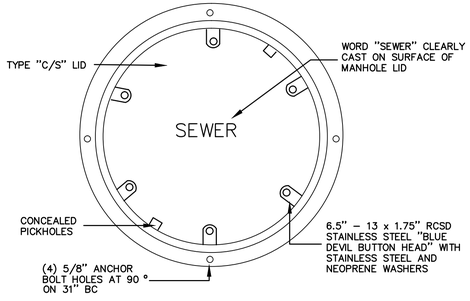

NOTE: STANDARD FRAME AND COVER FOR MANHOLE LOCATED OUTSIDE DEDICATED STREET ROW AND WHERE SURFACE RUNOFF CANNOT BE AVOIDED.

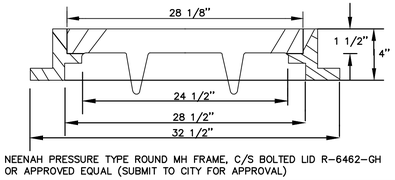

NEENAH PRESSURE TYPE ROUND MH FRAME, C/S BOLTED LID R–6462–GH OR APPROVED EQUAL (SUBMIT TO CITY FOR APPROVAL)

DRAWN BY: JSH
CHECKED BY: RJH
APPROVED BY: DIRECTOR OF PUBLIC WORKS

CITY OF BOULDER, COLORADO
STANDARD MANHOLE BOLT–DOWN WATER–TIGHT FRAME AND COVER

ISSUED: JULY 2, 1998
REVISED: OCT. 17, 2000
DRAWING NO. 6.04

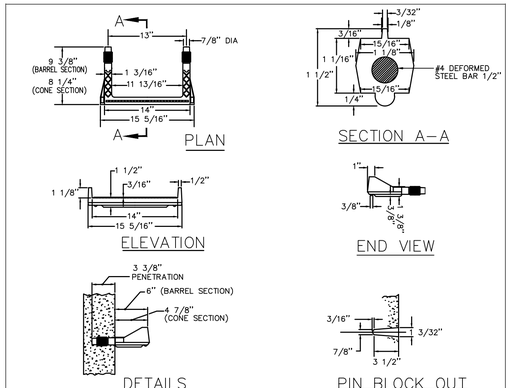

NOTES:
1. STEPS TO BE CAST, UNALTERED, IN MANHOLE WALL IN A STRAIGHT LINE, VERTICALLY. AT SAME TIME THE BARREL OR CONE SECTIONS ARE CAST.
2. IF STEPS ARE NOT CAST INTO THE MANHOLE BARREL SECTIONS AS MENTIONED ABOVE. STEPS SHALL BE INSTALLED BY THE "PRESS FIT" METHOD, UTILIZING A SPECIALLY TAPERED PIN TO FORM THE INSERT HOLE AS SHOWN. FOLLOWING MANUFACTURES RECOMMENDED PROCEDURE AND SHALL NOT BE GROUTED IN PLACE.
3. INSTALLED STEPS SHALL BE CAPABLE OF WITHSTANDING A PULL OUT FORCE OF 2500 LBS. PER LEG FOR A MINIMUM PERIOD OF TWO MINUTES.
4. PINS MUST BE SMOOTH AND CONTINOUSLY TAPERED. DIMENSIONS OF THE PIN AND THE INSERTED PORTION OF THE MANHOLE STEP ARE TYPICAL ONLY. W.M.D. INSTALLATIONS REQUIRE A MATCHED COMBINATION OF A TAPPERED INSERT PIN AND MANHOLE STEP, AS RECOMMENDED OR REQUIRED BY SPECIFIC MANUFACTURER OF THE STEP TO BE USED.
5. THIS STEP CAN ALSO BE USED IN TOE POCKET INSTALLATIONS PROVIDED 5" TOE CLEARANCE IS ALLOWED.

DRAWN BY: JSH
CHECKED BY: RJH
APPROVED BY: DIRECTOR OF PUBLIC WORKS

CITY OF BOULDER, COLORADO
POLYPROPYLENE REINFORCED PLASTIC MANHOLE STEP

ISSUED: JULY 2, 1998
REVISED: OCT. 17, 2000
DRAWING NO. 6.05B

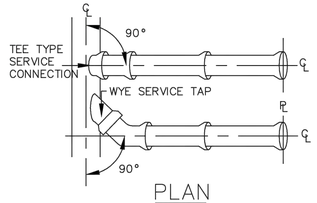

PLAN

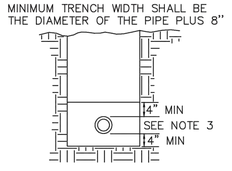

CROSS SECTION

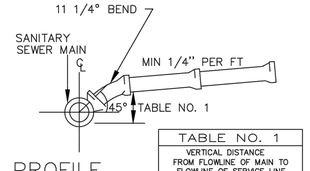

PROFILE

TABLE NO. 1		
VERTICAL DISTANCE FROM FLOWLINE OF MAIN TO FLOWLINE OF SERVICE LINE		
MAIN SIZE	4" SERVICE	6" SERVICE
8"	6"	10"
10"	11"	12"
12"	12"	13"
15"	15"	16.5"

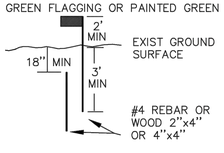

MARKER POST
(AT SERVICE STUB OUT)

NOTES:
1. ALL SERVICE LINES SHALL BE 4" MINIMUM IN DIAMETER.
2. THE MINIMUM SLOPE FOR 4" OR 6" SERVICE LINES SHALL BE 1\4" PER FOOT.
3. BEDDING FOR HOUSE CONNECTION WITHIN CITY ROW SHALL BE THE SAME AS FOR SEWER MAIN, LAID TO A MINIMUM DEPTH OF 4" BELOW THE PIPE INVERT AND 4" ABOVE THE TOP OF THE PIPE.
4. ALL TAPS ARE TO BE MADE BY THE CITY OF BOULDER, UNLESS OTHERWISE AUTHORIZED BY THE UTILITY DIVISION.
5. SERVICE LINES LARGER THAN 6" MUST BE CONNECTED TO THE MAIN AT A MANHOLE.
6. SERVICE LINE WILL BE PLUGGED AT THE PROPERTY LINE WITH APPROPRIATE PLUG FOR TYPE OF LINE INSTALLED UNTIL CONNECTED TO BUILDING. AFTER ABANDONMENT OF A SERVICE LINE IT MUST BE PLUGGED 5' INSIDE THE PROPERTY LINE.
7. COMPACTION OF BACKFILL SHALL BE AS STATED IN THE CITY OF BOULDER, STANDARD SPECIFICATIONS.

DRAWN BY: JSH
CHECKED BY: RJH
APPROVED BY: DIRECTOR OF PUBLIC WORKS

CITY OF BOULDER, COLORADO
SEWER SERVICE LINE

ISSUED: JULY 2, 1998
REVISED: OCT. 17, 2000
DRAWING NO. 6.06

OLSSON ASSOCIATES
4690 Table Mountain Drive Suite 200 Golden, CO 80403
TEL 303.237.2072 FAX 303.237.2659
OA # 012-1417
www.olssonassociates.com

COLORADO LICENSED PROFESSIONAL ENGINEER 06/20/14 42161

Kum & Go

6400 Westown Parkway
West Des Moines, Iowa 50266
P: 515-226-0128
F: 515-223-9873

#943 - BOULDER, COLORADO
3365 DIAGONAL HWY.

CONSTRUCTION DETAILS

KG PROJECT TEAM:
RDR: JXH
SDM: RJH
CPM: TLK

REVISIONS

△	DATE	REVISION DESCRIPTION

DATE: 06-20-2014

SHEET NUMBER:
C5.5
25 OF 32

DOCUMENT REVISION DATE AUGUST 2012
DWG: F:\Projects\012-1417_LDVP\Final_Plans\121417_DTL.dwg USER: sbower
DATE: Jul 01, 2014 2:45pm XREFS: 121417_TBLK_CD 602 604 517c 517b 517d 121417_XBASE 121417_PBASE

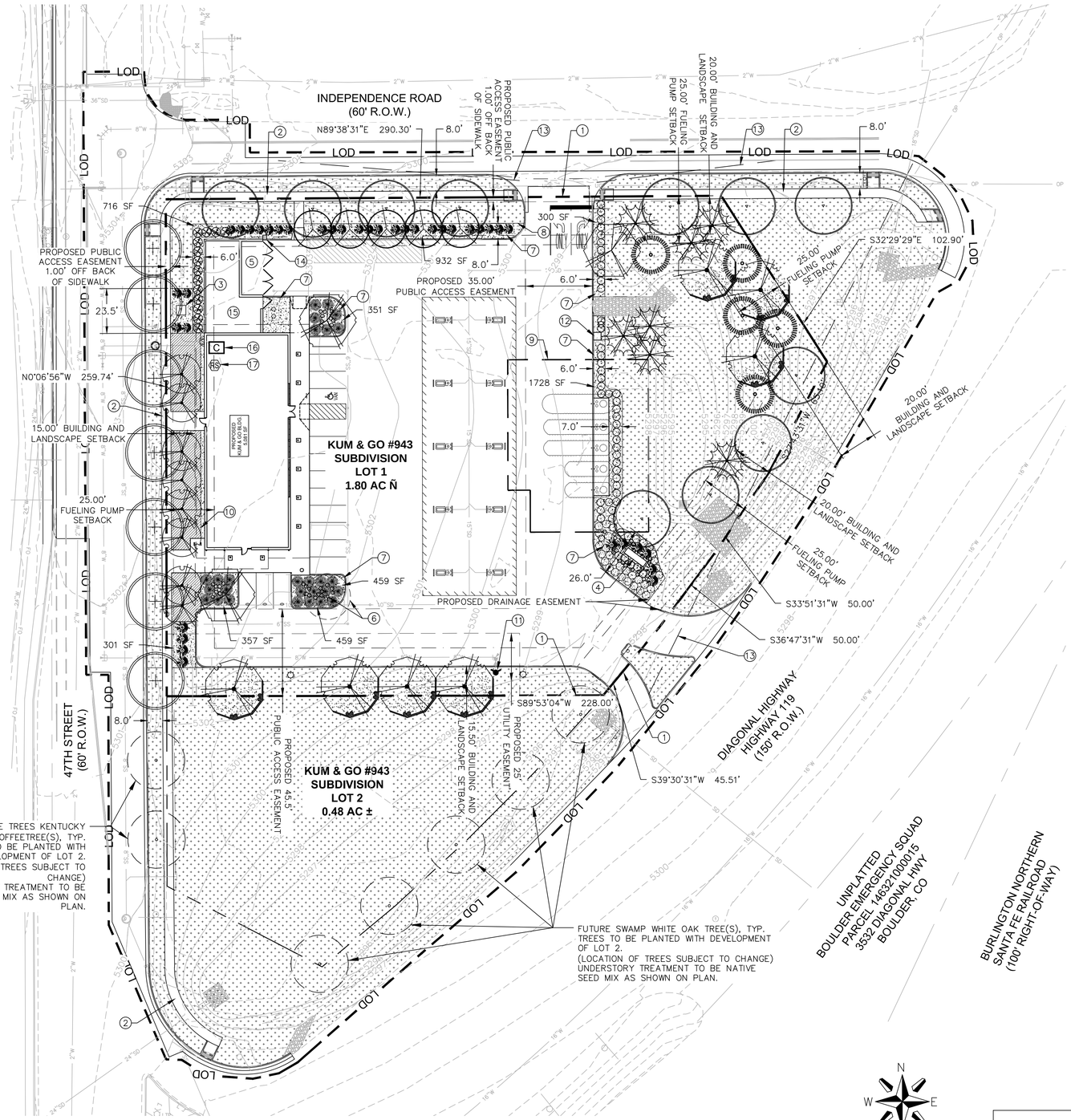

PLANT LIST

QTY.	SYMBOL	COMMON/SCIENTIFIC NAME	SIZE	NOTES
SHADE TREES				
7		KENTUCKY COFFEETREE GYMNOCLADUS DIOCA	2" CAL.	NURSERY GROWN B&B
11		SWAMP WHITE OAK QUERCUS BICOLOR	2" CAL.	NURSERY GROWN B&B
7		TURKISH FILBERT CORYLUS COLURNA	2" CAL.	NURSERY GROWN B&B
3		SHADEMASTER HONEYLOCUST GLEDITSIA TRIACANTHOS VAR. INERMIS 'SHADEMASTER'	2" CAL.	NURSERY GROWN B&B
EVERGREEN TREES				
7		COLORADO SPRUCE PICEA PUNGENS	6–8' HT	NURSERY GROWN B&B
5		PONDEROSA PINE PINUS PONDEROSA	6–8' HT	NURSERY GROWN B&B
ORNAMENTAL TREES				
9		GINNALA MAPLE ACER TATARICUM SSP. GINNALA	8' CLUMP	NURSERY GROWN B&B
5		WASATCH MAPLE ACER GRANDIDENTATUM	1 1/2" CAL.	NURSERY GROWN TREE FORM
DECIDUOUS SHRUBS				
27		GRO–LOW FRAGRANT SUMAC RHUS AROMATICA 'GRO–LOW'	5 GAL	CONTAINER GROWN
14		ROCKY MTN. SMOOTH SUMAC RHUS GLABRA VAR. CISMONTANA	5 GAL	CONTAINER GROWN
58		THREE–LEAF SUMAC RHUS TRILOBATA	5 GAL	CONTAINER GROWN
EVERGREEN SHRUBS				
38		ARMSTRONG JUNIPER JUNIPERUS CHINENSIS 'ARMSTRONGII'	5 GAL	CONTAINER GROWN
23		BLUE CHIP JUNIPER JUNIPERUS HORIZONTALIS 'BLUE CHIP'	5 GAL	CONTAINER GROWN
GROUNDCOVER / NATIVE GRASSES				
888		CREEPING MAHONIA MAHONIA REPENS	#1 CONT	CONTAINER GROWN 18" SPACING
52		LITTLE BLUESTEM SCHIZACHYRIUM SCOPARIUM	1 GAL	CONTAINER GROWN SEE PLAN

FLAG NOTES:

1. PROPERTY LINE
2. SIDEWALK
3. TRANSFORMER
4. MONUMENT SIGN
5. TRASH ENCLOSURE
6. FLAGPOLE, FLAG SWING LIMITS
7. FIBER MULCH, TYPICAL
8. STEEL EDGING, TYPICAL
9. TANK OVERDIG LIMITS
10. BIKE RACK
11. FIRE HYDRANT
12. AIR COMPRESSOR
13. SIGHT TRIANGLE
14. SMOKING AREA
15. PROPOSED CONDENSER UNIT ENCLOSURE
16. IRRIGATION CLOCK
17. RAIN/FREEZE SENSOR

LANDSCAPE CALCULATIONS

Total Lot Size	78,310 SF		
Total Parking Lot Size	34,436 SF		
Total Building Size	5,081 SF		
Total Area Not Covered by Building/Parking Lot	38,793 SF		
	Requirement	Required	Provided
MINIMUM OVERALL SITE LANDSCAPING REQUIREMENT: One tree and five shrubs per 1,500 SF of lot area not covered by building or parking.	Trees	26	26
	Shrubs	130	146
Total # of Parking Stalls		16	16
Total Interior Parking Lot Landscaped Area	5%	1,721 SF	1,168 SF
Landscaped % of Total Parking Lot Area*		5.0%	3.0%
Interior Parking Lot Landscape Trees	1 per 200 s.f.	10	10
Total Perimeter Parking Lot Landscaped Area			3,977 SF

Total # of Street Trees		Length (LF)			
	47th Street	359	1 per 40'	9	7
	Diagonal Highway	359	1 per 40'	9	4
	Independence Road	252	1 per 40'	7	7
	NE Diagonal	103	1 per 40'	3	3
Total Quantity of Plant Material on site			Trees	64	57**
			Shrubs	130	146

*NOTE – INTERIOR PARKING LANDSCAPE REQUIREMENT IS DEFICIENT DUE TO PHYSICAL LAYOUT OF PARKING LOT FROM VEHICULAR CIRCULATION REQUIREMENTS. ADDITIONAL SHRUBS AND PERENNIALS HAVE BEEN PLACED ON SITE TO ACCOMMODATE THIS DEFICIENCY.

**NOTE – SEVEN (7) STREET TREES TO BE PROVIDED WITH FUTURE DEVELOPMENT

N
W E
S
1" = 30'
0' 15' 30' 60'
SCALE IN FEET

LOW GROW NATIVE SEED MIX (FROM PAWNEE BUTTES SEED INC.)
(25%) IDAHO FESCUE
(25%) SANDBERG BLUEGRASS
(25%) ROCKY MOUNTAIN FESCUE
(25%) CANBY BLUEGRASS

GROUNDCOVER LEGEND:

LOW GROW NATIVE SEED MIX
68,570 SF

CREEPING MAHONIA
2,020 SF

811 Know what's below. Call before you dig.
CALL 811 SEVENTY–TWO HOURS PRIOR TO DIGGING, GRADING OR EXCAVATING FOR THE MARKING OF UNDERGROUND MEMBER UTILITIES

CITY APPROVAL STAMP:

OLSSON ASSOCIATES
4690 Table Mountain Drive
Suite 200
Golden, CO 80403
TEL 303.237.2072
FAX 303.237.2659
OA # 012-1417
www.olssonassociates.com

JOSEPH E. STOBERL LA-1040 08/23/13 Original Date of Licensure 6/20/14 STATE OF COLORADO LICENSED LANDSCAPE ARCHITECT

Kum & Go

6400 Westown Parkway
West Des Moines, Iowa
50266
P: 515-226-0128
F: 515-223-9873

#943 - BOULDER, COLORADO
3365 DIAGONAL HWY.

LANDSCAPE PLAN

KG PROJECT TEAM:
RDR: JXH
SDM: RJH
CPM: TLK

	DATE	REVISION DESCRIPTION

REVISIONS

DATE: 06-20-2014

SHEET NUMBER:
L1.1
26 OF 32

DWG: F:\Projects\012-1417_LDVP\Final_Plans\121417_LSC CD.dwg USER: jstoberl
DATE: Jul 02, 2014 12:14pm XREFS: 121417_PBASE 121417_XBASE 121417_TBLK_CD
DOCUMENT REVISION DATE: AUGUST 2012

NATIVE SEEDING NOTES

1. ALL MATERIALS USED SHALL MEET OR EXCEED APPLICABLE FEDERAL, STATE, COUNTY AND LOCAL LAWS AND REGULATIONS. ALL SEED SHALL BE FREE FROM INSECTS AND DISEASE. SPECIES SHALL BE TRUE TO THEIR SCIENTIFIC NAME AS SPECIFIED.
2. ALL GRASS SPECIES SHALL BE SUPPLIED AS PURE LIVE SEED (PLS).
3. SEED OF ALL SPECIES NATIVE TO **COLORADO** SHALL BE FROM WITHIN A 150 MILE RADIUS OF THE PROJECT SITE. SEED NOT AVAILABLE WITHIN A 150 MILE RADIUS SHALL BE APPROVED BY THE OWNER PRIOR TO INSTALLATION.
4. SEEDS SHALL HAVE PROPER STRATIFICATION AND/OR SCARIFICATION TO BREAK SEED DORMANCY FOR SPRING PLANTING.
5. SEEDING SHALL BE PREFERENTIALLY CONDUCTED AS A LATE FALL DORMANT SEEDING (AFTER NOVEMBER 1) OR IN EARLY SPRING (AS SOON AS THE SOIL IS FREE OF FROST AND IN A WORKABLE CONDITION BUT NO LATER THAN JUNE 15).
6. NATIVE SEEDING SHALL BE COMPLETED WHEN A MINIMUM OF 1/4 INCH OF NATURAL RAINFALL IS EXPECTED OR WHEN A MINIMUM OF 1/4 INCH OF IRRIGATION WILL BE RECEIVED WITHIN 10 DAYS AFTER SEEDING. IF SUFFICIENT NATURAL RAINFALL IS NOT RECEIVED WITHIN 10 DAYS, THE NEW SEEDING SHALL BE IRRIGATED WITH A MINIMUM OF 1/4 INCH OF WATER, OR SO THAT WATER PENETRATES THE SOIL TO A UNIFORM MINIMUM DEPTH OF 4.0 INCHES.
7. PROVIDE WRITTEN VERIFICATION TO THE OWNER THAT BACKFLOW PREVENTION PER CODE EXISTS ON THE LINE TO BE USED AS A POINT OF CONNECTION FOR THE IRRIGATION SYSTEM. IF VERIFICATION CANNOT BE MADE, PROVIDE BACKFLOW PREVENTION PER CODE AS A PART OF THE INSTALLATION.
8. CONTRACTOR SHALL PROVIDE WATER AND ELECTRICITY FOR THE SYSTEM IN THE EVENT THAT NEITHER IS AVAILABLE FOR IMMEDIATE USE. CONTRACTOR SHALL PROVIDE ISOLATION VALVE AND CONNECTION TO WATER AND CONTROLLER.
9. THE IRRIGATION SYSTEM SHALL BE SET BY CONTRACTOR PRECIPITATION 2 TIMES PER WEEK BETWEEN JUNE 15TH AND OCTOBER 31ST OF THE FIRST YEAR AFTER PLANTING. THE CONTRACTOR IS RESPONSIBLE FOR ENSURING PROPER FUNCTION AND CONNECTION OF THE IRRIGATION SYSTEMS. IT IS THE CONTRACTOR'S RESPONSIBILITY TO MAINTAIN THE IRRIGATION SYSTEM FOR THE DURATION OF FIRST FULL GROWING SEASON. AT THE END OF THE IRRIGATION PERIOD, AND IF PLANT ESTABLISHMENT IS SUCCESSFUL, AS DETERMINED BY THE SEEDING WARRANTY CRITERIA, THE CONTRACTOR SHALL PERMANENTLY CAP PIPE DOWNSTREAM OF ISOLATION VALVE, AND THEN DISASSEMBLE AND REMOVE THE IRRIGATION SYSTEM.
10. IT SHALL BE THE RESPONSIBILITY OF THE CONTRACTOR TO INSTALL TEMPORARY SIGNS, FLAGGING, ETC. AT THE PERIMETER OF ALL SEEDING SITES IMMEDIATELY AFTER THEIR COMPLETION, WHICH SHALL SERVE TO NOTIFY FOOT AND VEHICULAR TRAFFIC THAT A SENSITIVE AREA MAY BE DAMAGED BY THEIR ENTRY.
11. AREAS DESCRIBED AS NATIVE GRASS ZONES SHALL BE MULCHED. MULCHING IS THE APPLICATION OF ORGANIC MATERIAL TO THE SOIL SURFACE TO PROTECT IT FROM RAINDROP IMPACT AND OVERLAND FLOW. MULCH COVERS THE SOIL AND ABSORBS THE EROSIVE IMPACT OF RAINFALL AND REDUCES THE FLOW VELOCITY OF RUNOFF.

    STRAW MULCH SHALL BE OAT, WHEAT, OR RICE STRAW MULCH. HAY MULCH SHALL BE PRAIRIE GRASS OR OTHER HAY AS APPROVED BY THE OWNER. THE MULCH SHALL BE FREE OF JOHNSON GRASS OR OTHER NOXIOUS WEEDS AND FOREIGN MATERIALS. IT SHALL BE KEPT IN A DRY CONDITION AND SHALL NOT BE MOLDED OR ROTTED. STRAW OR HAY FOR EROSION CONTROL SHALL BE CLEAN, SEED-FREE HAY OR THRESHED STRAW OF WHEAT, RYE, OATS, OR BARLEY.

    MULCH SHALL COVER A MINIMUM OF 80% OF THE SOIL SURFACE FOR UNSEEDED AREAS. FOR SEEDED AREAS, MULCH SHALL BE PLACED LOOSE AND OPEN ENOUGH TO ALLOW SOME SUNLIGHT TO PENETRATE AND AIR TO CIRCULATE BUT STILL COVER A MINIMUM OF 70% OF THE SOIL SURFACE.

    MULCH SHALL BE APPLIED AT THE RATE OF 1½ TO 2 TONS PER ACRE FOR SITES THAT ARE SEEDED, AND 2 TO 3 TONS PER ACRE FOR SITES THAT ARE NOT SEEDED. THIS APPLICATION RESULTS IN A LAYER OF ½ TO 1½ INCHES THICK FOR SEEDED SITES, AND 1½ TO 3 INCHES THICK FOR SITES NOT SEEDED.

    IMMEDIATELY AFTER SPREADING, THE MULCH SHALL BE ANCHORED BY A MULCH CRIMPER AND/OR TACKIFIER.

    THE CRIMPER SHALL CONSIST OF A SERIES OF DULL FLAT DISCS WITH NOTCHED EDGES SPACED APPROXIMATELY 8 INCHES APART. THE MULCH SHALL BE IMPRESSED IN THE SOIL TO A DEPTH OF 1 TO 3 INCHES.

    TACKIFIER SHALL BE SPRAYED IN CONJUNCTION WITH MULCH OR IMMEDIATELY AFTER THE MULCH HAS BEEN PLACED. TACKIFIERS SHALL BE MIXED AND APPLIED IN ACCORDANCE WITH THE MANUFACTURER'S DIRECTIONS.
12. THE WORK AREA SHALL BE KEPT FREE OF DEBRIS BY THE CONTRACTOR. AFTER SEED INSTALLATION IS COMPLETE, CLEAN UP ANY REMAINING MATERIALS, DEBRIS, TRASH, ETC. AVOID DRIVING OVER SEEDED AREAS TO MINIMIZE DISTURBANCE. GRADING STAKES, STONES, TRASH, AND OTHER DEBRIS WHICH MAY DETRACT FROM THE APPEARANCE OR HINDER MAINTENANCE OF THE SEEDING SITE SHALL BE REMOVED FROM THE SITE WHEN SEEDING OPERATIONS ARE COMPLETED. SOIL, STRAW, HAY, HYDRAULIC FIBER MULCH, FERTILIZER, COMPOST, LIMESTONE, ELEMENTAL SULFUR, GYPSUM, AND OTHER DEBRIS SHALL BE REMOVED FROM PAVED AREAS SOON AS POSSIBLE AFTER SPREADING AND SEEDING OPERATIONS ARE COMPLETED. CLEAN UP OPERATIONS SHALL BE COMPLETED BEFORE ACCEPTANCE IS GIVEN.
13. IT SHALL BE THE RESPONSIBILITY OF THE CONTRACTOR TO APPLY EFFECTIVE SEEDING AND EROSION CONTROL MULCH MATERIALS, AND TO ENSURE THAT SUCH MATERIALS ARE SECURED TO THE SOIL SO THAT THEY ARE NOT BLOWN, WASHED, OR OTHERWISE REMOVED FROM THE SEEDING SITE, AND SO THAT NEARBY STREAMS AND OTHER AREAS SHALL BE PROTECTED FROM SOIL, FERTILIZER, COMPOST, AND THE INCURSION OF UNWANTED GRASS SEED.
14. INSTALLING CONTRACTOR SHALL REVIEW LANDSCAPE MAINTENANCE RECOMMENDATIONS WITH A QUALIFIED MITIGATION SPECIALIST APPROVED BY THE OWNER WHO IS FAMILIAR WITH THE STATED GOALS AND OBJECTIVES OF THE MITIGATION PLAN. MAINTENANCE IS TO BE PROVIDED THROUGHOUT CONSTRUCTION AND FOR THREE-YEARS FOLLOWING CONSTRUCTION. DURING THE MAINTENANCE PERIOD, BETWEEN MARCH AND SEPTEMBER 15, HAND SEED ALL PREVIOUSLY SEEDED AREAS WHICH SHOW BARE GROUND PATCHES LARGER THAN 36"X36". THE FOLLOWING GENERAL NATIVE GRASS MAINTENANCE RECOMMENDATIONS ARE TO BE FOLLOWED UNLESS AN ALTERNATIVE IS APPROVED BY THE OWNER.

NATIVE SEEDING NOTES (CONTINUED)

1ST YEAR – MOW FREQUENTLY TO PREVENT WEED GROWTH AND THATCH BUILD-UP. MOWING HEIGHT SHOULD BE APPROXIMATELY 4–6 INCHES IN HEIGHT AND COMPLETED BETWEEN THE MONTHS OF MARCH – JULY 15. NO MOWING SHOULD BE COMPLETED AFTER THE JULY 15 DATE. ADDITIONAL WEED PREVENTION IS RECOMMENDED WITH THE USE OF AN APPROVED HERBICIDE FOR NATIVE GRASSES. A GOOD APPROACH IS TO COMPLETE HERBICIDE APPLICATIONS AS SPOT TREATMENTS ON WEEDY AREAS FOLLOWING THE SEASONAL MOWING REGIME IN AUGUST AND SEPTEMBER. HAND WEED AS NECESSARY.

2ND YEAR – MOWING SHOULD BE LIMITED TO 2–3 TIMES BEFORE JULY 15TH. MOWING HEIGHT SHOULD BE INCREASED TO 8"IN HEIGHT. CONTINUE TO SPOT TREAT INVASIVE WEEDS WITH AN APPROVED HERBICIDE. HAND WEED AS NECESSARY.

3RD YEAR – MOW ONCE BEFORE JULY 15TH AFTER VEGETATION REACHES A HEIGHT OF 16". MOW TO A HEIGHT OF 8". CONTINUE TO SPOT TREAT INVASIVE WEEDS WITH AN APPROVED HERBICIDE. HAND WEED AS NECESSARY.

16. IN ADDITION TO THE SPECIFIED NATIVE SEED MIX, A COVER CROP OF OATS (AVENA SATIVA) NOVEMBER 1 – AUGUST 1 OR WINTER WHEAT (TRITICUM AESTIVUM) AUGUST 1 – NOVEMBER 1 TO BE SEEDED AT A RATE OF 120 LBS PER ACRE.

GENERAL PLANTING NOTES

1. ALL WORK SHALL BE COORDINATED WITH THE WORK OF OTHER TRADES.
2. LOCATE AND FLAG ALL UNDERGROUND UTILITIES PRIOR TO ANY CONSTRUCTION. CONTRACTOR SHALL PROTECT EXISTING OVERHEAD AND UNDERGROUND UTILITIES. ANY DAMAGE TO SUCH SHALL BE REPAIRED BY THE CONTRACTOR AT NO EXPENSE TO THE OWNER.
3. PLANTS AND OTHER MATERIALS ARE QUANTIFIED AND SUMMARIZED FOR THE CONVENIENCE OF THE CITY AND LOCAL GOVERNING BODIES. CONFIRM AND INSTALL SUFFICIENT QUANTITIES TO COMPLETE THE WORK AS DRAWN.
4. PLAN IS SUBJECT TO CHANGES BASED ON PLANT SIZE AND MATERIAL AVAILABILITY. ALL CHANGES OR SUBSTITUTIONS MUST BE APPROVED BY THE CITY OF **BOULDER, COLORADO** AND THE LANDSCAPE ARCHITECT.
5. ALL PLANT MATERIAL SHALL BE NURSERY GROWN TO MEET MINIMUM SIZE AS SPECIFIED IN THE AMERICAN STANDARD FOR NURSERY STOCK ESTABLISHED BY THE AMERICAN NURSERY & LANDSCAPE ASSOCIATION (ANLA). THE LANDSCAPE ARCHITECT OR OWNER'S REPRESENTATIVE RESERVES THE RIGHT TO REJECT ANY PLANT MATERIAL NOT MEETING SPECIFICATIONS.
6. PLANTING OF TREES, SHRUBS, SODDED AND SEEDED TURFGRASS SHALL BE COMMENCED DURING EITHER THE SPRING (MARCH 15–JUNE 15) OR FALL (SEPTEMBER 1 – OCTOBER 15) PLANTING SEASON AND WITH WATER AVAILABLE FOR IRRIGATION PURPOSES.
7. THE LANDSCAPE CONTRACTOR SHALL REMOVE ALL CONSTRUCTION DEBRIS AND MATERIALS INJURIOUS TO PLANT GROWTH FROM PLANTING PITS AND BEDS PRIOR TO BACKFILLING WITH PLANTING MIX.
8. A PRE-EMERGENT HERBICIDE SHALL BE APPLIED TO ALL SHRUB BEDS PRIOR TO THE INSTALLATION OF ANY PLANT MATERIAL.
9. BACKFILL ALL PLANTING HOLES TO A MINIMUM 12-INCH DEPTH WITH PLANTING SOIL MIX. THOROUGHLY MIX PLANTING SOIL COMPONENTS PRIOR TO PLACEMENT.
10. ALL PLANTING AREAS EXCEPT SOD AREAS, TREE AREAS, AND PERENNIAL BEDS SHALL CONTAIN RIVER ROCK MULCH AND INCLUDE A GEOTEXTILE WEED BARRIER FABRIC, UNLESS CALLED OUT OTHERWISE ON PLANS. RIVER ROCK SHALL BE 1–2" IN DIAMETER AND 3–4" DEEP IN ALL AREAS. PERENNIAL BEDS AND TREE AREAS SHALL CONTAIN SHREDDED HARDWOOD MULCH TO A DEPTH OF 3–4".
11. ALL LANDSCAPE AREAS AND SOD AREAS SHALL BE IRRIGATED WITH A HIGH-EFFICIENCY, AUTOMATIC IRRIGATION SYSTEM ACHIEVING 100% EVEN COVERAGE OF ALL LANDSCAPE AREAS. IRRIGATION SYSTEM SHALL BE DESIGNED TO MEET ALL CITY REQUIREMENTS. DRIP IRRIGATION SHALL BE USED IN ALL LANDSCAPE BEDS AND SPRAY HEADS SHALL BE USED ON ALL SODDED AREAS.
12. STEEL LANDSCAPE EDGING IS TO BE USED ON ALL LANDSCAPE BEDS ABUTTING SODDED AREAS AS NOTED ON LANDSCAPE PLANS.
13. LANDSCAPE CONTRACTOR IS TO BE RESPONSIBLE FOR WATERING ALL PLANT MATERIALS UNTIL THE TIME THE PERMANENT IRRIGATION SYSTEM IS FULLY FUNCTIONAL AND ACCEPTANCE OF THE PROJECT HAS TAKEN PLACE. ANY MATERIAL WHICH DIES, OR DEFOLIATES (PRIOR TO ACCEPTANCE OF THE WORK) WILL BE PROMPTLY REMOVED AND REPLACED.
14. THE CONTRACTOR WILL COMPLETELY GUARANTEE ALL WORK FOR A PERIOD OF ONE YEAR BEGINNING AT THE DATE OF ACCEPTANCE, OR STORE OPENING, WHICHEVER IS GREATER. CONTRACTOR WILL MAKE ALL REPLACEMENTS PROMPTLY (AS PER DIRECTION OF OWNER).
15. UPON INSTALLATION OF ALL LANDSCAPING, CONTRACTOR SHALL NOTIFY OLSSON ASSOCIATES. CONTRACTOR SHALL PROVIDE OLSSON ASSOCIATES FOUR (4) DAYS AFTER LANDSCAPE INSTALLATION IS COMPLETE TO PERFORM A FINAL LANDSCAPE INSPECTION AND APPROVAL.
16. PRIOR TO FINAL LANDSCAPE INSPECTION, CONTRACTOR SHALL PROVIDE OLSSON ASSOCIATES WITH RECEIPTS OF ALL PLANT MATERIALS INSTALLED ON-SITE.
17. CONTRACTOR SHALL BE RESPONSIBLE FOR MAINTAINING AS-BUILT REDLINES SHOWING CHANGES TO THE APPROVED FINAL LANDSCAPE PLANS. AS-BUILT REDLINES SHALL BE PROVIDED TO OLSSON ASSOCIATES PRIOR TO THE FINAL LANDSCAPE INSPECTION.

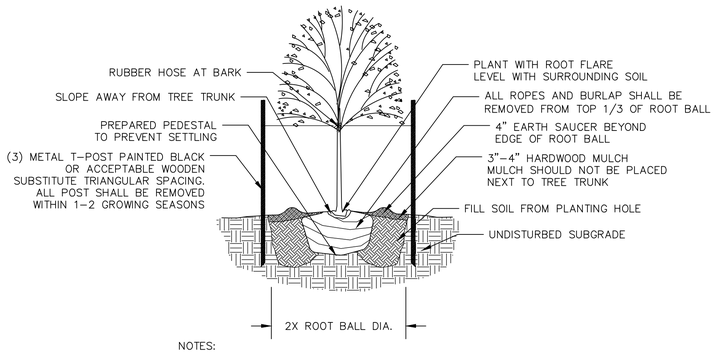

NOTES:
1. DO NOT ALLOW AIR POCKETS TO FORM WHEN BACKFILLING.
2. IN AREAS OF TURF, SURROUND BED WITH 6' DIAMETER OF MULCH.

1 DECIDUOUS TREE PLANTING DETAIL
NOT TO SCALE

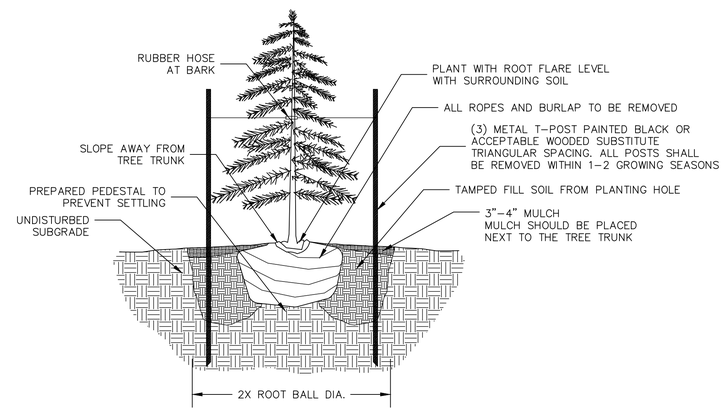

NOTES:
1. DO NOT ALLOW AIR POCKETS TO FORM WHEN BACKFILLING.
2. IN AREAS OF TURF, SURROUND BED WITH 6' DIAMETER OF MULCH.

2 EVERGREEN TREE PLANTING DETAIL
NOT TO SCALE

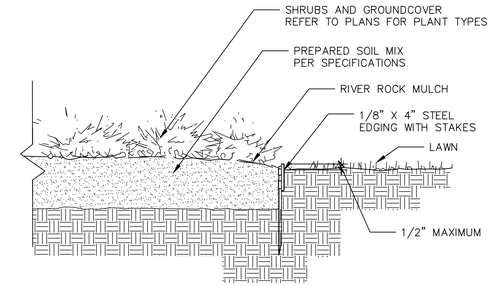

3 STEEL LANDSCAPE EDGING DETAIL
NOT TO SCALE

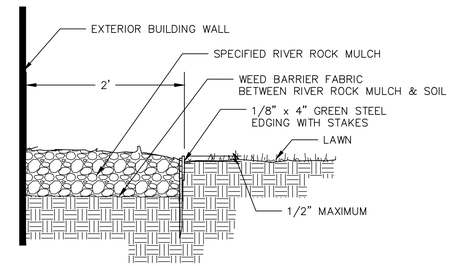

4 MOW STRIP DETAIL
NOT TO SCALE

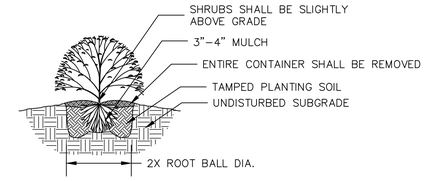

NOTES:
1. MINIMUM ROOT SPREAD TO BE IN ACCORDANCE WITH ANLA STANDARDS.
2. PRUNE DAMAGED LIMBS OR ROOTS AFTER INSTALLATION.
3. MAKE SURE ROOTS DO NOT DRY OUT DURING INSTALLATION.
4. SOAK GENEROUSLY TO COMPACT AND SETTLE.

5 SHRUB PLANTING DETAIL
NOT TO SCALE

SOIL SPECIFICATIONS

ORGANIC COMPOST: WELL DECOMPOSED, STABLE, WEED FREE ORGANIC MATTER SOURCE. IT SHALL BE DERIVED FROM; AGRICULTURE, FOOD, OR INDUSTRIAL RESIDUALS; BIOSOLIDS (TREATED SEWAGE SLUDGE); YARD TRIMMINGS AND LEAF RAKINGS; SOURCE-SEPARATED OR MIXED SOLID WASTE MEETING THE FOLLOWING CRITERIA:

1. 100 PERCENT SHALL PASS THROUGH A 3/8 INCH SCREEN.
2. PH OF 6.0 TO 8.5.
3. MOISTURE CONTENT OF 30% TO 60% BY WEIGHT.
4. NO SUBSTANCES TOXIC TO PLANTS.
5. 1% OR LESS BY WEIGHT MANUFACTURED FOREIGN MATTER.
6. NO OBJECTIONABLE ODOR.
7. SHALL NOT RESEMBLE THE RAW MATERIAL FROM WHICH IT DERIVED.

PLANTING SOIL: A UNIFORM MIX OF, FREE OF PLANT RESIDUE, STONES, STUMPS ROOTS OR SIMILAR OBJECTS LARGER THAN 1 INCH. MIXTURE OF TOPSOIL, ORGANIC COMPOST AND SAND CONSISTING OF THE FOLLOWING:

1. 15% BY VOLUME ORGANIC COMPOST
2. 15% BY VOLUME SAND
3. 70% BY VOLUME TOPSOIL

TOPSOIL: SOIL CLASSIFICATION OF SANDY LOAM OR LOAMY SAND MEETING THE FOLLOWING CRITERIA:

1. 50 TO 85 PERCENT BY WEIGHT SAND (2.0 TO 0.050MM) ACCORDING TO AASHTO T88.
2. 5 TO 50 PERCENT BY WEIGHT SILT (0.050 TO 0.002MM) ACCORDING TO AASHTO T88.
3. 2 TO 5 PERCENT BY WEIGHT CLAY (LESS THAN 0.002MM) ACCORDING TO AASHTO T88.
4. 3 TO 10 PERCENT BY WEIGHT ORGANIC MATTER ACCORDING TO AASHTO T194.
5. TEXTURAL ANALYSIS:
   A. MINIMUM 100% BY WEIGHT PASSING THE 2" SIEVE PER ASTM E11.
   B. MINIMUM 90% BY WEIGHT PASSING THE NO. 4 PER ASTM E11.
   C. MINIMUM 80% BY WEIGHT PASSING THE NO. 10 SIEVE PER ASTM E11.

NATIVE SEED MIX

PBSI LOW GROW NATIVE MIX – 40 LBS PER ACRE

COMMON NAME	RATE
IDAHO FESCUE	25%
SANDBERG BLUEGRASS	25%
ROCKY MOUNTAIN FESCUE	25%
CANBY BLUEGRASS	25%

SEED MIX A:
PBSI LOW GROW NATIVE MIX

SEEDBED PREP:
METHOD: ROTOTILLED TO 6–8"
DATES: PER GENERAL NOTES
OTHER: PER SOILS REPORT

SEEDING OPERATION:
METHOD: HYDROSEED
DATES: PER GENERAL NOTES
DEPTH: 1/4" – 1/2"

FERTILIZER:
N2: PER SOILS REPORT
P205: PER SOILS REPORT
K: PER SOILS REPORT

WEED CONTROL: CHEMICAL, 14 DAYS PRIOR TO SEEDING.

MULCH: GREEN COLOR HYDROMULCH AFTER SEEDING. SUBMIT SAMPLE.
AMOUNT: 2,200 LBS PER ACRE
KIND: HYDROSEED IN 2 STEPS:
1ST – SEED APPLICATION
2ND – MULCH APPLICATION
ANCHOR: TACKIFIER AT 100 LBS PER ACRE

CITY APPROVAL STAMP:

811 Know what's below. Call before you dig.
CALL 811 SEVENTY-TWO HOURS PRIOR TO DIGGING, GRADING OR EXCAVATING FOR THE MARKING OF UNDERGROUND MEMBER UTILITIES

OLSSON ASSOCIATES
4690 Table Mountain Drive Suite 200 Golden, CO 80403
TEL 303.237.2072 FAX 303.237.2659
OA # 012-1417 www.olssonassociates.com

JOSEPH E. STOBERL LA-1040 08/23/13 Original Date of Licensure 06/20/14 STATE OF COLORADO LICENSED LANDSCAPE ARCHITECT

Kum & Go
6400 Westown Parkway
West Des Moines, Iowa 50266
P: 515-226-0128
F: 515-223-9873

#943 - BOULDER, COLORADO
3365 DIAGONAL HWY.

PLANT SCHEDULE AND SPECIFICATIONS

KG PROJECT TEAM:
RDR: JXH
SDM: RJH
CPM: TLK

REVISIONS

	DATE	REVISION DESCRIPTION

DATE: 06-20-2014

SHEET NUMBER:
L1.2
27 OF 32

DWG: F:\Projects\012-1417_LDVP\Final_Plans\121417_LSC CD.dwg USER: jstoberl
DATE: Jun 24, 2014 8:42am XREFS: 121417_PBASE 121417_XBASE 121417_TBLK_CD

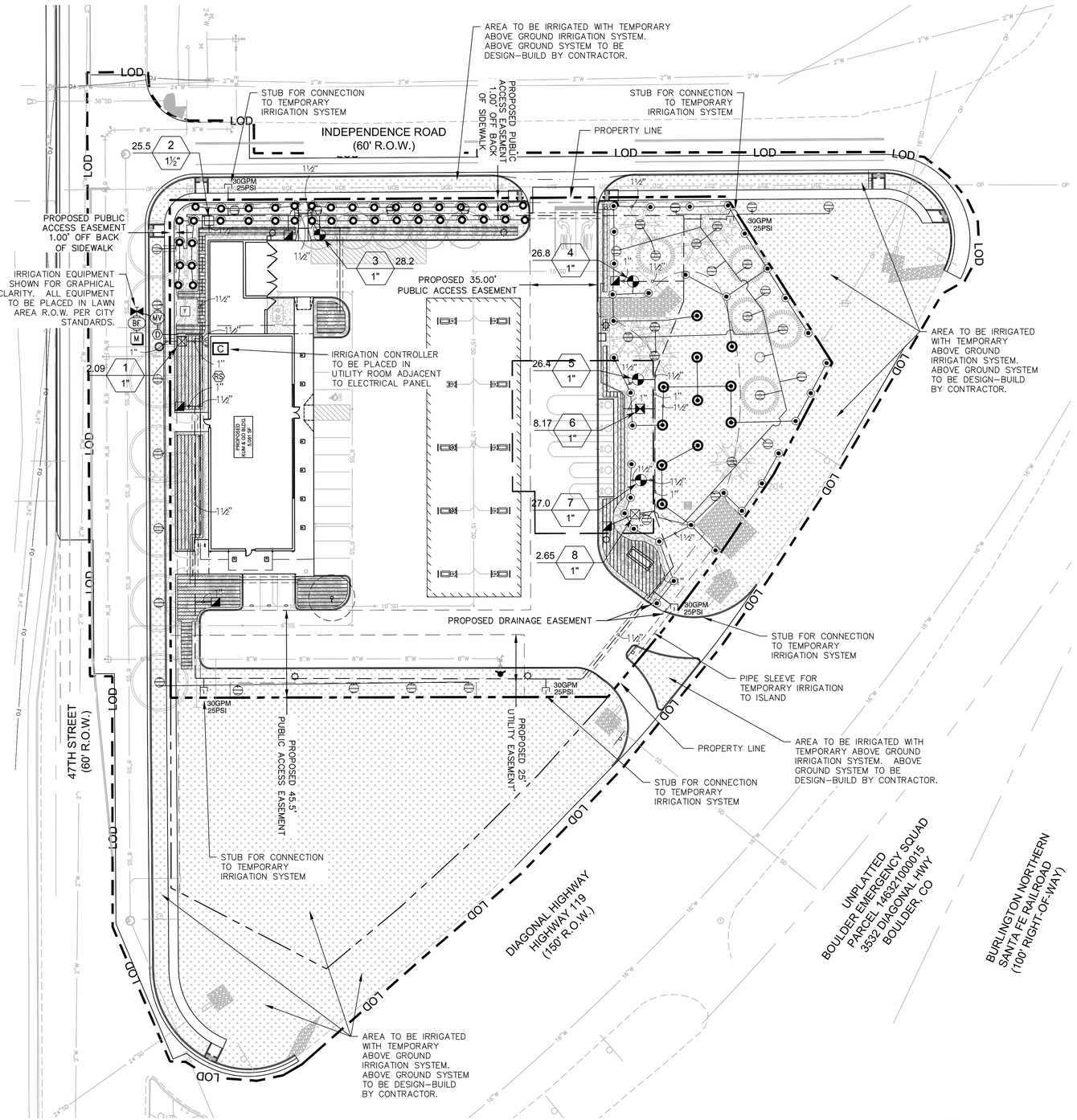

N
W E
S

1" = 30'
0' 15' 30' 60'
SCALE IN FEET

CRITICAL ANALYSIS

Generated: 13:09	2014–03–17
P.O.C. NUMBER: 01	
Water Source Information: place in lawn area of R.O.W. All irrigation components to be installed per city code.	1" water meter
FLOW AVAILABLE	
Water Meter Size:	1"
Flow Available:	37.50 gpm
PRESSURE AVAILABLE	
Static Pressure at POC:	75.00 psi
Elevation Change:	2.00 ft
Service Line Size:	2"
Length of Service Line:	10.00 ft
Pressure Available:	74.00 psi
DESIGN ANALYSIS	
Maximum Station Flow:	30.00 gpm
Flow Available at POC:	37.50 gpm
Residual Flow Available:	7.50 gpm
Critical Station:	2
Design Pressure:	30.00 psi
Loss Elev. high head to valve:	0.43 psi
Pipe Loss Critical Head:	2.45 psi
Loss Fitting Factor:	0.25 psi
Loss through Valve:	10.99 psi
Pressure Req. at Critical Station:	44.13 psi
Loss for Fittings:	0.14 psi
Loss for Main Line:	1.43 psi
Loss for POC to Valve Elevation:	0.43 psi
Loss for Backflow:	13.97 psi
Loss for Master Valve:	6.25 psi
Loss for Water Meter:	4.09 psi
Critical Station Pressure at POC:	70.44 psi
Pressure Available:	74.00 psi
Residual Pressure Available:	3.56 psi

NOTE: PRESSURE OF 75 PSI AND FLOW OF 37.50 GPM WAS ASSUMED FOR THIS DESIGN. IRRIGATION CONTRACTOR TO VERIFY AVAILABLE PRESSURE (PSI) & FLOW (GPM) PRIOR TO INSTALLATION OF ANY IRRIGATION COMPONENTS. LANDSCAPE ARCHITECT SHALL BE IMMEDIATELY NOTIFIED OF ANY DISCREPANCIES THAT WILL PREVENT IRRIGATION SYSTEM FROM OPERATING PROPERLY AS DESIGNED.

LATERAL LINE SIZING CHART	
GPM	PIPE SIZE
0–5	1/2"
6–9	3/4"
10–15	1"
16–20	1 1/4"
21–30	1 1/2"
31–50	2"

LIABILITY STATEMENT:

THE PURPOSE OF THIS IRRIGATION PLAN IS TO PROVIDE A PHYSICAL LAYOUT OF IRRIGATION EQUIPMENT TO ASSIST THE CONTRACTOR IN ACCURATELY ESTIMATING THE MATERIAL COST TO BID THE SPRINKLER SYSTEM. THE DESIGN INTENT IS TO PROVIDE THE CONTRACTOR WITH A DIAGRAMMATIC LAYOUT OF SPRINKLER EQUIPMENT, WHICH WILL PROVIDE ADEQUATE WATER COVERAGE FOR THE LANDSCAPE MATERIALS WITHIN THE SCOPE OF WORK UNDER THIS CONTRACT. THESE PLANS AND THE MATERIAL'S SPECIFIED ARE SUBJECT TO CHANGE WITHOUT NOTICE. PRIOR TO BIDDING THIS CONTRACT THE CONTRACTOR WILL VERIFY ALL IRRIGATION MATERIAL MODEL NUMBERS, DIMENSIONS, COMPATIBILITY OF COMPONENT ASSEMBLIES, MAINLINE AND ZONE HYDRAULICS, ELECTRICAL COMPONENTS, WIRING, ALL SLEEVES, WATER AND ELECTRICAL SOURCE'S, WATER PRESSURE AND G.P.M. AVAILABLE AND APPLICABLE SITE CONDITIONS, WHICH MAY ADVERSELY AFFECT EITHER THE COST OR PERFORMANCE OF THIS SPRINKLER SYSTEM. IF A CONFLICT IS FOUND THE CONTRACTOR WILL NOTIFY THE OWNER IN WRITING AND WILL NOT START THE WORK UNTIL THE OWNER HAS RESOLVED THE CONFLICT AND ISSUED IN WRITING A "NOTICE TO PROCEED". IF A CONFLICT IS FOUND AFTER THE CONTRACT HAS BEEN SIGNED THE CONTRACTOR WILL RESOLVE THE CONFLICT AT HIS OWN EXPENSE AND AT NO ADDITIONAL COST TO THE OWNER. SLEEVING UNDER SIDEWALKS MAY NOT BE SHOWN OR CALLED OUT DUE TO LACK OF SPACE ON PLANS. ONCE A BID HAS BEEN GIVEN TO THE OWNER FROM THE CONTRACTOR CHANGE ORDERS FOR EITHER ADDITIONAL MATERIALS OR TO CHANGE TO MATERIALS THAT ARE NOT FOUND ON THIS PLAN IS NOT ACCEPTABLE AND WILL NOT BE ALLOWED

THESE PLANS DO NOT EXPRESS OR IMPLY IN ANY WAY ANY TYPE OF TRADE WARRANTY OR MATERIAL GUARANTEE FROM THE MANUFACTURER AND NEITHER OFFERS ANY TYPE OF INSTALLATION WARRANTY NOR GUARANTEE OF ANY TYPE FOR THE FINISHED WORK. STARTING FROM THE DAY THE CONTRACTOR SIGNS THIS CONTRACT CONTINUING IN PERPETUITY THE IRRIGATION CONSULTANT HAVING NEITHER AFFILIATION WITH NOR CONTROL OVER EITHER THE CONTRACTOR OR HIS STAFF WILL BE HELD HARMLESS FOR ACTIONS OF THE CONTRACTOR AND HIS STAFF THAT MAY DAMAGE PROPERTY OR CAUSE PERSONAL BODILY INJURY. BY ACCEPTING THIS CONTRACT THE CONTRACTOR ACKNOWLEDGES HIS LIABILITY TO PAY THE FULL AMOUNT OF ANY AND ALL DAMAGE CLAIMS FILED AGAINST THE OWNERS PROPERTY, PROPERTY ADJACENT TO THE OWNER'S PROPERTY OR FOR ANY AND ALL PERSONAL INJURIES THAT RESULT DURING OR FROM THE INSTALLATION OF OR SUBSEQUENT OPERATION OF THIS SPRINKLER SYSTEM. BY SIGNING THIS CONTRACT THE CONTRACTOR AGREES TO INDEMNIFY THE IRRIGATION CONSULTANT AND PAY ALL LEGAL FEES, FINES, COURT SETTLEMENTS, ANY AND ALL OTHER COSTS MENTIONED OR NOT MENTIONED HEREIN THAT MAY HAVE RESULTED FROM PROPERTY DAMAGE, PERSONAL BODILY INJURY OR ANY OTHER DAMAGE OR INJURY CAUSED DURING THE INSTALLATION OR OPERATION OF THIS SPRINKLER SYSTEM.

IRRIGATION_SCHEDULE

SYMBOL	MANUFACTURER/MODEL/DESCRIPTION	PSI
R-VAN 1318 R-VAN 1724	Rain Bird R-VAN-1318 RD-1804-SAM-P45-NP Turf Rotator, 13'-18' Hand Adjustable Rotary Stream, w/RD-1800 turf spray body, 4.0" Pop-Up. With Seal-A-Matic Check Valve and 45 psi in-stem pressure regulation. With Non-Potable Purple Cap.	30
Q T H TT TQ F	Rain Bird R-1318 RD-1804-SAM-P45-NP Turf Rotator, 13'-18' Rotary Stream, w/RD-1800 turf spray body on 4.0" pop-up, with check valve and 45 psi in-stem pressure regulator. 1/2" NPT Female Threaded Inlet. With Non-Potable Purple Cap.	30
Q T H TT TQ F	Rain Bird R-1724 RD-1804-SAM-P45-NP Turf Rotator, 17'-24' Rotary Stream, w/RD-1800 turf spray body on 4.0" pop-up, with check valve and 45 psi in-stem pressure regulator. 1/2" NPT Female Threaded Inlet. With Non-Potable Purple Cap.	30

SYMBOL	MANUFACTURER/MODEL/DESCRIPTION
	Rain Bird XCZ-PRB-100-COM Medium Plus Flow Drip Control Kit for Commercial Applications. 1" Ball Valve with 1" PESB Valve and 1" Pressure Regulating 40psi Quick-Check Basket Filter. 3gpm to 20gpm.
	Rain Bird XCZ-150-PRB-COM High Flow Control Zone Kit, for Large Commercial Drip Zones. 1-1/2" PESB Valve with two 1" Pressure Regulating (40psi) Quick-Check Basket Filters. Flow range: 15-40gpm.
	Rain Bird XCZ-LF-100-PRF Low Flow Drip Control Kit, 1" Low Flow Valve, 3/4" Pressure Regulating RBY Filter, and 30psi Pressure Regulator. 0.2gpm-5gpm.
	Area to Receive Dripline Rain Bird XFS-09-18 (18) Landscape Dripline with Copper Shield, 0.92gph emitters at 18" o.c. Dripline laterals spaced at 18" apart, with emitters offset for triangular pattern.

SYMBOL	MANUFACTURER/MODEL/DESCRIPTION
	Rain Bird PGA Electric Remote Control Valve
	Rain Bird 5RC 1" Quick Coupler Valve, one piece body
	Nibco T-29-K 200 PSI CWP Bronze Gate Valve, Cross Handle, Size Range – 1/2" – 2"
MV	Rain Bird PGA-PRS-D (MASTER) 1" Electric Remote Control Master Valve, with pressure regulator.
D	Blow Off Valve Per City Standards
BF	Febco 860 1" Reduced Pressure Backflow Preventer placed in Strong Box
C	Rain Bird ESP8LXMEF-LXMM with (01) ESPLXMSM4 12 Station Capable Commercial Controller. Mounted on a Powder-Coated Metal Cabinet. Flow Sensing and Water Management Capabilities.
RS	Rain Bird WR2-RC Wireless Rain Sensor Combo, includes 1 receiver and 1 rain sensor transmitter.
	Cap for future use Cap at the mainline or lateral line for future use. The pressure and flow provided to that location are indicated next to the cap symbol.
M	Water Meter 1" 1" water meter place in lawn area of R.O.W. All irrigation components to be installed per city code.
	Irrigation Lateral Line: PVC Class 200 SDR 21 Only lateral transition pipe sizes 1 1/4" and above are indicated on the plan, with all others being 1" in size.
	Irrigation Mainline: PVC Class 200 SDR 21
	Pipe Sleeve: PVC Schedule 40 4"Pipe Sleeve –PVC Schedule 40 Extend sleeves 18 inches beyond edges of paving /curb.

Valve Callout
- Valve Number
- Valve Flow
- Valve Size

811 Know what's below. Call before you dig.

CALL 811 SEVENTY-TWO HOURS PRIOR TO DIGGING, GRADING OR EXCAVATING FOR THE MARKING OF UNDERGROUND MEMBER UTILITIES

CITY APPROVAL STAMP:

OLSSON ASSOCIATES
4690 Table Mountain Drive Suite 200 Golden, CO 80403
TEL 303.237.2072 FAX 303.237.2659
OA # 012-1417
www.olssonassociates.com

JOSEPH E. STOBERL LA-1040 08/23/13 Original Date of Licensure STATE OF COLORADO LICENSED LANDSCAPE ARCHITECT

Kum & Go

6400 Westown Parkway
West Des Moines, Iowa
50266
P: 515-226-0128
F: 515-223-9873

#943 - BOULDER, COLORADO
3365 DIAGONAL HWY.

IRRIGATION PLAN

KG PROJECT TEAM:
RDR: JXH
SDM: RJH
CPM: TLK

REVISIONS

△	DATE	REVISION DESCRIPTION

DATE: 06-20-2014

SHEET NUMBER:
I1.1
28 OF 32

DWG: F:\Projects\012-1417_LDVP\Final_Plans\121417_IRR.dwg USER: jstoberl
DATE: Jun 24, 2014 8:44am XREFS: 121417_PBASE 121417_XBASE 121417_TBLK_CD 121417_LSC CD
DOCUMENT REVISION DATE AUGUST 2012

IRRIGATION NOTES

1. THE SYSTEM DESIGN ASSUMES A MINIMUM AVAILABLE STATIC PRESSURE FOR THE IRRIGATION SYSTEM OF 75 PSI AT THE 1" WATER METER. VERIFY PRESSURE AND FLOW ON SITE PRIOR TO CONSTRUCTION AND REPORT ANY DISCREPANCIES BETWEEN THESE ASSUMPTIONS AND ACTUAL FIELD CONDITIONS IN WRITING TO THE OWNER'S REPRESENTATIVE.

2. READ THOROUGHLY AND BECOME FAMILIAR WITH THE SPECIFICATIONS AND INSTALLATION DETAILS FOR THIS AND RELATED WORK PRIOR TO CONSTRUCTION.

3. COORDINATE LOCATION AND MARKING OF UNDERGROUND UTILITIES PRIOR TO CONSTRUCTION. NOTIFY THE OWNER'S REPRESENTATIVE OF ANY CONFLICT WITH ANY UNDERGROUND UTILITY.

4. DO NOT PROCEED WITH THE INSTALLATION OF THE IRRIGATION SYSTEM WHEN IT IS OBVIOUS IN THE FIELD THAT OBSTRUCTIONS OR GRADE DIFFERENCES EXIST THAT MIGHT NOT HAVE BEEN CONSIDERED IN THE ENGINEERING, OR IF DISCREPANCIES IN CONSTRUCTION DETAILS, LEGEND, NOTES, OR SPECIFICATIONS ARE DISCOVERED. BRING ALL SUCH OBSTRUCTIONS OR DISCREPANCIES TO THE ATTENTION OF THE OWNER'S REPRESENTATIVE IN WRITING PRIOR TO CONSTRUCTION.

5. THESE DRAWINGS ARE DIAGRAMMATIC. THEREFORE, THE FOLLOWING SHOULD BE NOTED:
   A. AVOID CONFLICTS BETWEEN THE IRRIGATION SYSTEM, PLANTING MATERIALS AND ARCHITECTURAL FEATURES. INSTALL IRRIGATION PIPE AND WIRING IN LANDSCAPED AREAS WHENEVER POSSIBLE.
   B. USE ONLY STANDARD TEES AND ELBOW FITTINGS. USE OF CROSS TYPE FITTINGS IS NOT PERMITTED.
   C. IRRIGATION PIPE AND VALVES MAY BE SHOWN OUTSIDE OF THE PLANTING AREA, IN THE HARDSCAPE OR OUTSIDE OF PROPERTY LINES FOR GRAPHIC CLARITY ONLY. INSTALL ALL IRRIGATION COMPONENTS WITHIN LANDSCAPED AREAS OR THROUGH SLEEVEING AND WITHIN THE PROPERTY BOUNDARY.

6. PROVIDE THE FOLLOWING COMPONENTS TO THE OWNER'S REPRESENTATIVE PRIOR TO THE COMPLETION OF THE PROJECT:
   A. TWO OPERATING KEYS FOR EACH TYPE OF MANUALLY OPERATED VALVES.
   B. TWO OF EACH SERVICING WRENCH OR TOOL NEEDED FOR COMPLETE ACCESS, ADJUSTMENT, AND REPAIR OF ALL SPRINKLERS AND EMITTERS.

7. SELECT NOZZLES FOR SPRAY AND ROTARY SPRINKLERS WITH ARCS THAT PROVIDE COMPLETE AND UNIFORM COVERAGE WITH MINIMUM OVERSPRAY FOR THE SITE CONDITIONS. TO MINIMIZE OVERSPRAY, INSTALL PRESSURE COMPENSATING NOZZLES OR PRESSURE COMPENSATING SCREENS IF UNIFORM LATERAL PRESSURE CANNOT BE ATTAINED WITH PRESSURE ADJUSTMENT AT THE REMOTE CONTROL VALVE. CAREFULLY ADJUST THE RADIUS OF THROW AND ARC OF COVERAGE OF EACH SPRAY AND ROTARY SPRINKLER TO PROVIDE THE BEST PERFORMANCE.

8. THE IRRIGATION CONTRACTOR IS RESPONSIBLE FOR COORDINATING WITH THE GENERAL CONTRACTOR FOR THE INSTALLATION OF IRRIGATION SLEEVING. ALL SLEEVING WILL BE SCHEDULE 40 PVC. ALL PIPE AND WIRE WILL BE INSTALLED IN SEPARATE SLEEVES AT ALL PAVED SURFACES, SIDEWALKS, DRIVEWAYS, WALL FOOTINGS AND HARDSCAPE AREAS. ALL SLEEVES MAY NOT BE SHOWN AND/OR SIZED ON THE PLANS. THE GENERAL CONTRACTOR IS RESPONSIBLE FOR COORDINATING WITH THE IRRIGATION CONTRACTOR FOR THE INSTALLATION OF ALL REQUIRED SLEEVING, PROPER SIZING AND COORDINATE INSTALLATION OF SLEEVING WITH OTHER TRADES. ANY PIPE OR WIRE WHICH PASSES BENEATH EXISTING HARDSCAPE WHERE SLEEVING WAS NOT INSTALLED, REQUIRES HORIZONTAL BORING BY THE IRRIGATION CONTRACTOR. SLEEVE AND CONDUIT SIZES SHALL BE A MINIMUM OF TWICE THE AGGREGATE DIAMETER OF ALL PIPE AND WIRE CONTAINED WITHIN SLEEVE OR CONDUIT PIPE. MINIMUM SLEEVE SIZE IS 2-INCH. INDICATE ALL SLEEVE LOCATIONS ON "AS-BUILT" RECORD DRAWINGS.

9. COORDINATE AND INSTALL ALL ELECTRICAL POWER TO THE IRRIGATION CONTROL SYSTEM IN ACCORDANCE WITH THE NATIONAL ELECTRIC CODE AND ALL APPLICABLE LOCAL ELECTRIC UTILITY CODES.

10. GATE VALVES SHALL BE PORTED TO PROVIDE FOR FULL FLOW. LABELED AND NOMINAL SIZE OF VALVE OPENING SHALL BE THE SAME.

11. ALL MATERIALS AND WORKMANSHIP SHALL BE TRUE TO TYPE, FORM, FINISH AND OF THE HIGHEST STANDARDS OF THE TRADE. DAMAGED OR INFERIOR MATERIALS SHALL BE REMOVED FROM THE SITE WITHOUT DELAY.

12. INSTALL PRESSURE REGULATING MODULE FOR ALL DRIP VALVE ASSEMBLIES. SET DISCHARGE PRESSURE TO 35 PSI.

13. INSTALL IRRIGATION PIPE AND COMPONENTS A MINIMUM OF 8 FEET FROM TREE ROOT BALLS. PIPE ROUTINGS SHOWN ON DRAWINGS IS DIAGRAMMATIC.

14. PROVIDE #12-1 AWG BARE COPPER TRACING WIRE ALONG THE ENTIRE MAINLINE ROUTING. PROVIDE 24 INCH COIL OF TRACING WIRE IN EACH VALVE BOX ALONG MAINLINE ROUTING.

15. CONTRACTOR SHALL FURNISH AND INSTALL MATERIAL AND EQUIPMENT PERTAINING TO THE IRRIGATION SYSTEM HEREIN SPECIFIED OR SHOWN ON THE DRAWINGS. THIS SHALL INCLUDE ALL ITEMS NECESSARY TO COMPLETE INSTALLATION.

16. IRRIGATION CONTRACTOR TO CAP ALL FLUSH ENDS HAND TIGHT PRIOR TO BACKFILL.

17. IRRIGATION CONTRACTOR SHALL COORDINATE WORK WITH PLANTING PLANS TO AVOID CONFLICTING LOCATIONS BETWEEN PIPING AND PLANT PITS.

18. ALL MATERIALS SHALL BE INSTALLED AS DETAILED IN THE PLANS. IF THE CONTRACT DRAWINGS AND/OR SPECIFICATIONS DO NOT THOROUGHLY DESCRIBE THE METHOD OR TECHNIQUES TO BE USED, THEN THE CONTRACTOR SHALL INSTALL AS PER MANUFACTURERS SPECIFICATIONS. IF A CONTRADICTION OCCURS, NOTIFY THE LANDSCAPE ARCHITECT IMMEDIATELY.

19. IRRIGATION CONTRACTOR TO USE TEFLON TAPE ON ALL THREADED JOINTS.

20. NO PIPES SHALL BE INSTALLED PARALLEL AND DIRECTLY OVER ANOTHER LINE.

21. BRAND EACH VALVE BOX WITH 1" LETTERING SHOWING ZONE NUMBER AND CONTROLLER LETTER. THIS STAMP IS TO MATCH THE ZONE AND CONTROLLER ASSOCIATED WITH THE VALVE'S OPERATION.

22. CONTRACTOR SHALL PERFORM THE FOLLOWING:
   A. VISIT SITE AND VERIFY EXISTING GRADES, CONSTRUCTION AND CONDITIONS.
   B. NOTIFY LANDSCAPE ARCHITECT OF DISCREPANCIES BETWEEN PLAN AND FIELD CONDITIONS.
   C. RESTORE CONTRACTOR DAMAGED EXISTING WORK TO THE SATISFACTION OF THE ENGINEER OR LANDSCAPE ARCHITECT WITHOUT COST TO THE OWNER.
   D. BE SATISFIED THAT THE PLAN CAN BE CONSTRUCTED, FUNCTIONAL AND COMPLETE.

23. ALL EQUIPMENT SHALL BE MAINTAINED WHILE UNDER CONSTRUCTION. MAINTENANCE INCLUDES: WATER SCHEDULING, REPLACEMENT OF DEFECTIVE OR DAMAGED EQUIPMENT, ADJUSTMENT AND RE-ADJUSTMENT OF HEADS AND OTHER EQUIPMENT.

24. CONTRACTOR TO ENSURE THE FOLLOWING:
   A. LINES AND VALVES ARE TO BE PLACED WITHIN PLANTING BEDS AND PROJECT LIMITS. THESE PLANS ARE SCHEMATIC. CONTRACTOR SHALL SIZE ALL PIPE.
   B. 100% COVERAGE OF IRRIGATION SYSTEM TO ALL PLANTS REGARDLESS OF SIZE OR TYPE AND SHALL CONFIRM ALL NON-IRRIGATED AREAS PRIOR TO SUBMITTING A BID.

25. INSTALL TWO (2) SPARE #14-1 AWG CONTROL WIRES FOR EACH UNUSED STATION AND ONE SPARE #12-1 AWG COMMON WIRE FROM THE RESPECTIVE CONTROLLER TO ITS LOCATION FOR USE AS SPARE WIRES IN EACH REMOTE CONTROL VALVE BOX ALONG THE ENTIRE WIRE ROUTING FOR THIS CONTROLLER. SEAL WIRE ENDS WATER TIGHT AND CONTAIN WITHIN VALVE BOX AT THIS LOCATION.

26. SHOULD FIELD ADJUSTMENTS BE MADE TO THE SITE PLAN, IRRIGATION CONTRACTOR SHALL MAKE ANY NECESSARY ADJUSTMENTS TO THE IRRIGATION SYSTEM TO ENSURE PROPER FUNCTIONALITY. LANDSCAPE ARCHITECT IS TO BE NOTIFIED OF ANY AND ALL CHANGES MADE TO THE IRRIGATION SYSTEM, PRIOR TO INSTALLATION OF SAID CHANGES.

VALVE SCHEDULE

NUMBER	MODEL	SIZE	TYPE	WIRE	PSI	PSI @ POC	GPM	HEAD ELEV	VALVE ELEV	PRECIP
1	Rain Bird XCZ-LF-100-PRF	1"	Area for Dripline	75.9	36.99	54.77	2.09	-1.00 ft	2.00 ft	0.69 in/h
2	Rain Bird XCZ-150-PRB-COM	1-1/2"	Area for Dripline	135.5	44.12	69.37	26.20	1.00 ft	1.00 ft	0.69 in/h
3	Rain Bird PGA	1"	Turf Rotary	202.3	37.62	64.13	28.24	1.00 ft	1.00 ft	1.08 in/h
4	Rain Bird PGA	1"	Turf Rotary	442.8	39.95	67.91	26.78	1.00 ft	3.50 ft	0.34 in/h
5	Rain Bird PGA	1"	Turf Rotary	479.6	38.43	66.07	26.45	1.00 ft	3.50 ft	0.40 in/h
6	Rain Bird XCZ-PRB-100-COM	1"	Area for Dripline	493.6	36.66	56.97	8.17	1.00 ft	3.50 ft	0.69 in/h
7	Rain Bird PGA	1"	Turf Rotary	530.5	37.92	65.93	27.00	1.00 ft	3.50 ft	0.47 in/h
8	Rain Bird XCZ-LF-100-PRF	1"	Area for Dripline	540.7	38.41	56.93	2.65	1.00 ft	3.50 ft	0.69 in/h
	Common Wire			1,250						

7 DAY WATERING SCHEDULE

NUMBER	MODEL	TYPE	PRECIP	SUN	MON	TUE	WED	THU	FRI	SAT	IN./WEEK	MIN./WEEK	GAL./WEEK	GAL./DAY
1	Rain Bird XCZ-LF-100-PRF	Area for Dripline	0.69 in/h	18 min	18 min	18 min	18 min	18 min	18 min	18 min	1.38	120	251.0	35.9
2	Rain Bird XCZ-150-PRB-COM	Area for Dripline	0.69 in/h	18 min	18 min	18 min	18 min	18 min	18 min	18 min	1.38	120	3,144	449.2
3	Rain Bird PGA	Turf Rotary	1.08 in/h	11 min	11 min	11 min	11 min	11 min	11 min	11 min	1.38	77	2,175	310.7
4	Rain Bird PGA	Turf Rotary	0.34 in/h	35 min	35 min	35 min	35 min	35 min	35 min	35 min	1.38	244	6,534	933.5
5	Rain Bird PGA	Turf Rotary	0.40 in/h	30 min	30 min	30 min	30 min	30 min	30 min	30 min	1.38	207	5,475	782.1
6	Rain Bird XCZ-PRB-100-COM	Area for Dripline	0.69 in/h	18 min	18 min	18 min	18 min	18 min	18 min	18 min	1.38	120	980.9	140.1
7	Rain Bird PGA	Turf Rotary	0.47 in/h	26 min	26 min	26 min	26 min	26 min	26 min	26 min	1.38	177	4,779	682.8
8	Rain Bird XCZ-LF-100-PRF	Area for Dripline	0.69 in/h	18 min	18 min	18 min	18 min	18 min	18 min	18 min	1.38	120	318.0	45.4
		TOTALS:		174	174	174	174	174	174	174		1,185	23,658	3,380

3 DAY WATERING SCHEDULE

NUMBER	MODEL	TYPE	PRECIP	SUN	MON	TUE	WED	THU	FRI	SAT	IN./WEEK	MIN./WEEK	GAL./WEEK	GAL./DAY
1	Rain Bird XCZ-LF-100-PRF	Area for Dripline	0.69 in/h		40 min		40 min		40 min		1.38	120	251.0	83.7
2	Rain Bird XCZ-150-PRB-COM	Area for Dripline	0.69 in/h		40 min		40 min		40 min		1.38	120	3,144	1,048
3	Rain Bird PGA	Turf Rotary	1.08 in/h		26 min		26 min		26 min		1.38	77	2,175	724.9
4	Rain Bird PGA	Turf Rotary	0.34 in/h		82 min		82 min		82 min		1.38	244	6,534	2,178
5	Rain Bird PGA	Turf Rotary	0.40 in/h		69 min		69 min		69 min		1.38	207	5,475	1,825
6	Rain Bird XCZ-PRB-100-COM	Area for Dripline	0.69 in/h		40 min		40 min		40 min		1.38	120	980.9	327.0
7	Rain Bird PGA	Turf Rotary	0.47 in/h		59 min		59 min		59 min		1.38	177	4,779	1,593
8	Rain Bird XCZ-LF-100-PRF	Area for Dripline	0.69 in/h		40 min		40 min		40 min		1.38	120	318.0	106.0
		TOTALS:			396		396		396			1,185	23,658	7,886

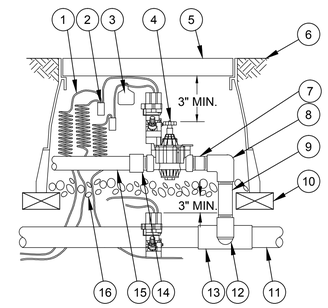

1. 30-INCH LINEAR LENGTH OF WIRE, COILED
2. WATERPROOF CONNECTION: RAIN BIRD SPLICE-1 (1 OF 2)
3. ID TAG: RAIN BIRD VID SERIES
4. REMOTE CONTROL VALVE: RAIN BIRD PGA-PRS-D
5. VALVE BOX WITH COVER: RAIN BIRD VB-STD
6. FINISH GRADE/TOP OF MULCH
7. PVC SCH 80 NIPPLE (CLOSE)
8. PVC SCH 40 ELL
9. PVC SCH 80 NIPPLE (LENGTH AS REQUIRED)
10. BRICK (1 OF 4)
11. PVC MAINLINE PIPE
12. SCH 80 NIPPLE (2-INCH LENGTH, HIDDEN) AND SCH 40 ELL
13. PVC SCH 40 TEE OR ELL
14. PVC SCH 40 MALE ADAPTER
15. PVC LATERAL PIPE
16. 3.0-INCH MINIMUM DEPTH OF 3/4-INCH WASHED GRAVEL

2 RAIN BIRD REMOTE CONTROL VALVE
NOT TO SCALE — PGA-PRS-D SERIES

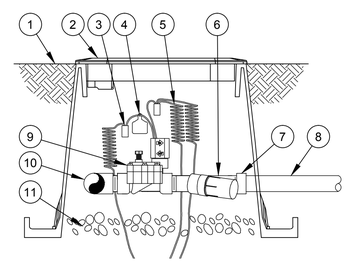

SIDE VIEW

1. FINISH GRADE
2. STANDARD VALVE BOX WITH COVER: RAIN BIRD VB-STD
3. WATERPROOF CONNECTION: RAIN BIRD DB SERIES
4. VALVE ID TAG
5. 30-INCH LINEAR LENGTH OF WIRE, COILED
6. PRESSURE REGULATING FILTER: RAIN BIRD PRF-100-RBY (INCLUDED IN XCZ-100-PRF KIT)
7. PVC SCH 40 FEMALE ADAPTOR
8. LATERAL PIPE
9. REMOTE CONTROL VALVE: RAIN BIRD 100-DV (INCLUDED IN XCZ-100-PRF KIT)
10. PVC SCH 40 TEE OR ELL TO MANIFOLD
11. 3-INCH MINIMUM DEPTH OF 3/4-INCH WASHED GRAVEL
12. MANIFOLD PIPE AND FITTINGS

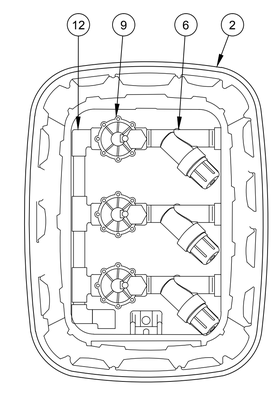

TOP VIEW

1 RAIN BIRD XCZ-100-PRF DRIP ZONE CONTROL VALVE
NOT TO SCALE

IRRIGATION NOTES (CONTINUED)

27. CONTRACTOR SHALL PROVIDE TWO (2) DAYS' NOTICE WHEN COORDINATING WITH OLSSON ASSOCIATES TO INSPECT THE IRRIGATION MAIN IN AN OPEN TRENCH CONDITION PRIOR TO BACKFILLING ACTIVITIES.

28. CONTRACTOR SHALL PROVIDE TWO (2) DAYS' NOTICE WHEN COORDINATING WITH OLSSON ASSOCIATES TO INSPECT THE IRRIGATION SYSTEM START-UP AND PRESSURE TEST.

29. CONTRACTOR SHALL BE RESPONSIBLE FOR MAINTAINING AS-BUILT REDLINES SHOWING CHANGES TO THE APPROVED FINAL IRRIGATION PLANS. AS-BUILT REDLINES SHALL BE PROVIDED TO OLSSON ASSOCIATES PRIOR TO THE FINAL IRRIGATION INSPECTION.

811 Know what's below. Call before you dig.

CALL 811 SEVENTY-TWO HOURS PRIOR TO DIGGING, GRADING OR EXCAVATING FOR THE MARKING OF UNDERGROUND MEMBER UTILITIES

CITY APPROVAL STAMP:

OLSSON ASSOCIATES
4690 Table Mountain Drive Suite 200 Golden, CO 80403
TEL 303.237.2072 FAX 303.237.2659
OA # 012-1417
www.olssonassociates.com

JOSEPH E. STOBERL LA-1040 08/23/13 Original Date of Licensure STATE OF COLORADO LICENSED LANDSCAPE ARCHITECT

Kum & Go
6400 Westown Parkway
West Des Moines, Iowa
50266
P: 515-226-0128
F: 515-223-9873

#943 - BOULDER, COLORADO
3365 DIAGONAL HWY.

IRRIGATION NOTES AND DETAILS

KG PROJECT TEAM:
RDR: JXH
SDM: RJH
CPM: TLK

△	DATE	REVISION DESCRIPTION

REVISIONS

DATE: 06-20-2014

SHEET NUMBER:
I1.2
29 OF 32

DWG: F:\Projects\012-1417_LDVP\Final_Plans\121417_IRR.dwg USER: jstoberl
DATE: Jun 24, 2014 8:44am XREFS: 121417_PBASE 121417_XBASE 121417_TBLK_CD 121417_LSC CD
DOCUMENT REVISION DATE AUGUST 2012

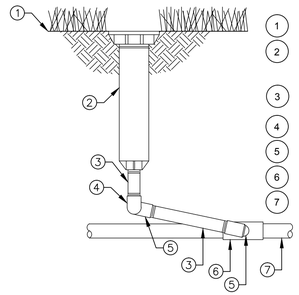

1. FINISH GRADE/TOP OF MULCH
2. POP-UP SPRAY SPRINKLER: RAIN BIRD 1804-SAM-PRS WITH PLASTIC MPR NOZZLE
3. PVC SCH 80 NIPPLE (LENGTH AS REQUIRED)
4. PVC SCH 40 ELL
5. PVC SCH 40 STREET ELL
6. PVC SCH 40 TEE OR ELL
7. PVC LATERAL PIPE

3 RAIN BIRD TURF SPRAY HEAD

NOT TO SCALE — 1804-SAM-PRS WITH SWING JOINT

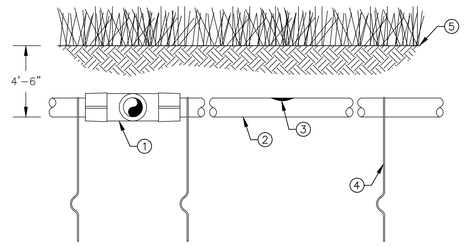

1. EASY FIT COMPRESSION TEE: RAIN BIRD MDCFTEE
2. SUB-SURFACE DRIPLINE: RAIN BIRD XF SERIES DRIPLINE POTABLE: XFS DRIPLINE NON-POTABLE: XFSP DRIPLINE
3. INLINE DRIP EMITTER
4. TIE DOWN STAKE: RAIN BIRD TDS-050 WITH BEND (TYPICAL)
5. TURF/FINISH GRADE OR SHRUB BED WITH MULCH

NOTES:

1. PLACE TIE DOWN STAKES EVERY THREE FEET IN SAND, F0UR FEET IN LOAM, AND FIVE FEET IN CLAY.
2. AT FITTINGS WHERE THERE IS A CHANGE OF DIRECTION SUCH AS TEES OR ELBOWS, USE TIE-DOWN STAKES ON EACH LEG OF THE CHANGE OF DIRECTION.
3. INSERTION PLOW AND TRENCHED INSTALLATIONS DO NOT REQUIRE TIE DOWN STAKES.

6 RAIN BIRD XFS DRIPLINE BURIAL

NOT TO SCALE

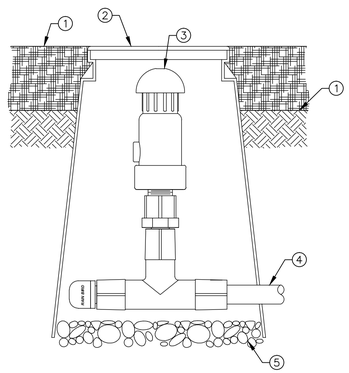

1. FINISH GRADE/TOP OF MULCH
2. 6" ROUND VALVE BOX: RAIN BIRD VB-6RND
3. AIR RELIEF VALVE KIT: RAIN BIRD AR VALVE KIT
4. LANDSCAPE DRIPLINE TUBING: RAIN BIRD XF DRIPLINE
5. 3.0-INCH MINIMUM DEPTH OF 3/4-INCH WASHED GRAVEL

4 RAIN BIRD AR AIR RELIEF VALVE

NOT TO SCALE

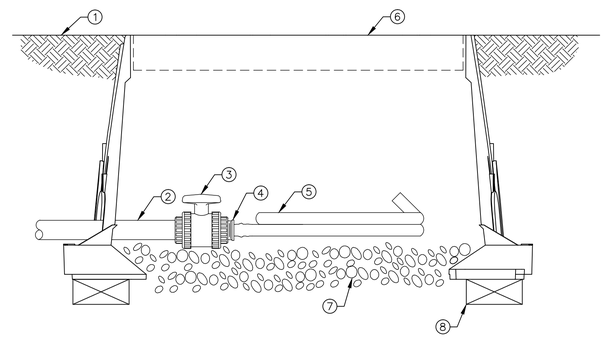

1. FINISH GRADE
2. PVC DRIP MANIFOLD PIPE
3. PVC 1" X ¾" TRUE UNION BALL VALVE
4. EASY FIT MALE X BARB ADAPTER: RAIN BIRD XFD-MA-075
5. SUB-SURFACE DRIPLINE: RAIN BIRD XF SERIES BLANK TUBING
6. 12-INCH VALVE BOX WITH COVER: RAIN BIRD VB-STD
7. 3-INCH MINIMUM DEPTH OF ¾" WASHED GRAVEL
8. BRICK (1 OF 2)

7 RAIN BIRD XFS DRIPLINE FLUSH POINT

NOT TO SCALE — BALL VALVE

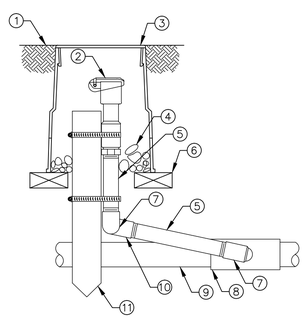

1. FINISH GRADE/TOP OF MULCH
2. QUICK-COUPLING VALVE: RAIN BIRD MODEL 5RC
3. VALVE BOX WITH COVER: RAIN BIRD VB-6RND
4. 3-INCH MINIMUM DEPTH OF 3/4-INCH WASHED GRAVEL
5. PVC SCH 80 NIPPLE (LENGTH AS REQUIRED)
6. BRICK (1 OF 2)
7. PVC SCH 40 STREET ELL
8. PVC SCH 40 TEE OR ELL
9. PVC MAINLINE PIPE
10. PVC SCH 40 ELL
11. 2" x 2" REDWOOD STAKE WITH STAINLESS STEEL GEAR CLAMPS OR EQUIVALENT SUPPORT SYSTEM

NOTE:

FURNISH FITTINGS AND PIPING NOMINALLY SIZED IDENTICAL TO NOMINAL QUICK COUPLING VALVE INLET SIZE

5 RAIN BIRD 5RC QUICK COUPLER

NOT TO SCALE

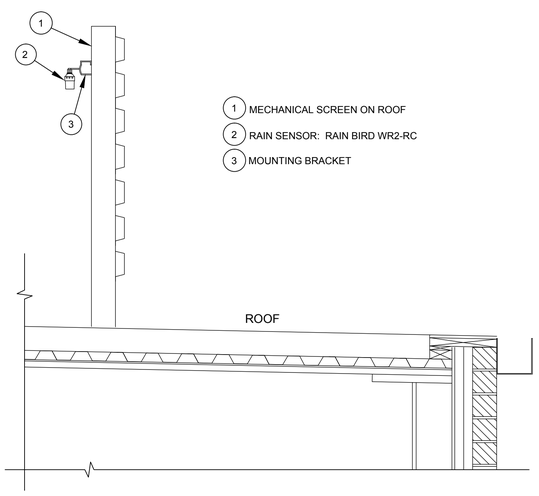

1. MECHANICAL SCREEN ON ROOF
2. RAIN SENSOR: RAIN BIRD WR2-RC
3. MOUNTING BRACKET

8 RAIN BIRD WR2-RC RAIN SENSOR

NOT TO SCALE — WR2-RC ROOF MOUNT

Know what's below. Call before you dig.

CALL 811 SEVENTY–TWO HOURS PRIOR TO DIGGING, GRADING OR EXCAVATING FOR THE MARKING OF UNDERGROUND MEMBER UTILITIES

CITY APPROVAL STAMP:

OLSSON ASSOCIATES
4690 Table Mountain Drive Suite 200 Golden, CO 80403
TEL 303.237.2072 FAX 303.237.2659
OA # 012-1417 www.olsson-associates.com

JOSEPH E. STOBERL LA-1040 08/23/13 Original Date of Licensure STATE OF COLORADO LICENSED LANDSCAPE ARCHITECT

Kum & Go

6400 Westown Parkway
West Des Moines, Iowa
50266
P: 515-226-0128
F: 515-223-9873

#943 - BOULDER, COLORADO
3365 DIAGONAL HWY.

IRRIGATION DETAILS

KG PROJECT TEAM:
RDR: JXH
SDM: RJH
CPM: TLK

△	DATE	REVISION DESCRIPTION

REVISIONS

DATE: 06-20-2014

SHEET NUMBER: I1.3

30 OF 32

DWG: F:\Projects\012-1417_LDVP\Final_Plans\121417_IRR.dwg USER: jstoberl
DATE: Jun 24, 2014 8:44am XREFS: 121417_PBASE 121417_XBASE 121417_TBLK_CD 121417_LSC CD
DOCUMENT REVISION DATE AUGUST 2012

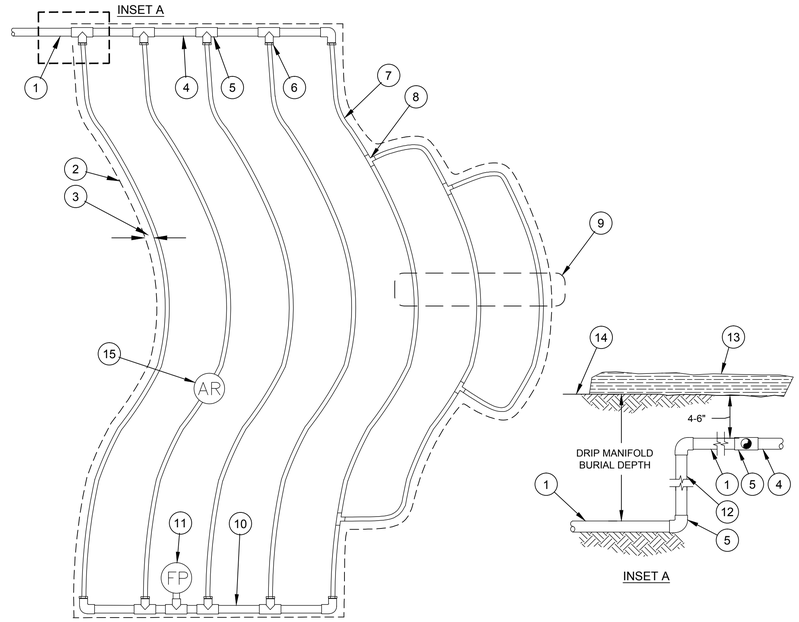

1. PVC SUPPLY PIPE FROM RAIN BIRD CONTROL ZONE KIT (SIZED TO MEET LATERAL FLOW DEMAND)
2. PERIMETER OF AREA
3. PERIMETER DRIPLINE PIPE TO BE INSTALLED 2"-4" FROM PERIMETER OF AREA
4. PVC SUPPLY MANIFOLD
5. PVC SCH 40 TEE OR EL (TYPICAL)
6. BARB X MALE FITTING: RAIN BIRD XFD-MA FITTING (TYPICAL)
7. SUB-SURFACE DRIPLINE: RAIN BIRD XF SERIES DRIPLINE (TYPICAL) POTABLE: XFS DRIPLINE NON-POTABLE: XFSP DRIPLINE
8. BARB X BARB INSERT TEE: RAIN BIRD XFD-TEE (TYPICAL)
9. TOTAL LENGTH OF SELECTED DRIPLINE SHOULD NOT EXCEED LENGTH SHOWN IN TABLE
10. PVC FLUSH HEADER
11. FLUSH POINT: SEE RAIN BIRD XFS DETAILS FOR FLUSH POINT INSTALLATION
12. PVC RISER PIPE
13. TURF OR MULCH
14. FINISH GRADE
15. AIR RELIEF VALVE: RAIN BIRD ARV-12 SEE RAIN BIRD XFS DETAILS FOR ARV-12 INSTALLATION

NOTES:
1. DISTANCE BETWEEN LATERAL ROWS AND EMITTER SPACING TO BE BASED ON SOIL TYPE, PLANT MATERIALS AND CHANGES IN ELEVATION. SEE INSTALLATION SPECIFICATIONS ON RAIN BIRD WEB SITE (WWW.RAINBIRD.COM) FOR SUGGESTED SPACING.
2. LENGTH OF LONGEST DRIPLINE LATERAL SHOULD NOT EXCEED THE MAXIMUM SPACING SHOWN IN THE ACCOMPANYING TABLE.
3. INSTALL AIR RELIEF VALVE AT HIGH POINTS IN DRIP LATERAL.

	XFS Dripline Maximum Lateral Lengths (Feet)					
	12" Spacing		18" Spacing		24" Spacing	
PSI	0.6 GPH	0.9 GPH	0.6 GPH	0.9 GPH	0.6 GPH	0.9 GPH
15	273	155	314	250	424	322
20	318	169	353	294	508	368
30	360	230	413	350	586	414
40	395	255	465	402	652	474
50	417	285	528	420	720	488
60	460	290	596	455	780	512

WHEN USING 17MM INSERT FITTINGS WITH DESIGN PRESSURE OVER 50PSI, IT IS RECOMMENDED THAT STAINLESS STEEL CLAMPS BE INSTALLED ON EACH FITTING.

10 RAIN BIRD XFS DRIPLINE LAYOUT
NOT TO SCALE

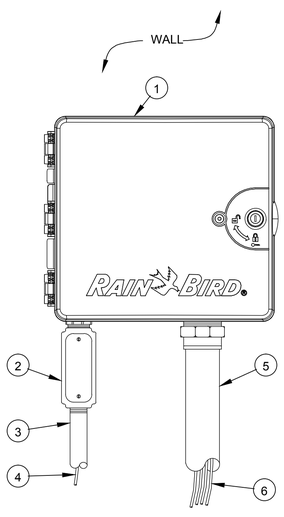

1. IRRIGATION CONTROLLER: RAIN BIRD ESP-LXME CONTROLLER IN METAL CABINET WITH WALL MOUNT. INSTALL CONTROLLER AND CABINET ON WALL PER MANUFACTURER'S RECOMMENDATIONS.
2. JUNCTION BOX
3. 1-INCH CONDUIT AND FITTINGS TO POWER SUPPLY
4. POWER SUPPLY WIRE
5. 2-INCH CONDUIT AND FITTINGS FOR STATION WIRES
6. WIRES TO REMOTE CONTROL VALVES

NOTES:
1. ESP-LXME CONTROLLER IS AVAILABLE IN 8- OR 12-STATION BASE MODELS. ADDITIONAL MODULES IN 4-, 8- AND 12-STATION VERSIONS MAY BE ADDED TO BRING THE CONTROLLER UP TO 48 STATIONS MAXIMUM.
2. FOR EASE OF INSTALLATION INTO A CONTROLLER WITH MORE THAN 24 STATIONS, INSTALL A JUNCTION BOX AT THE BASE OF CONTROLLER AND TRANSITION LARGER VALVE AND COMMON WIRES FROM FIELD TO 18 AWG MULTI CONDUCTOR WIRE TO BE USED IN CONTROLLER.
3. USE STEEL CONDUIT FOR ABOVE GRADE AND SCH 40 PVC CONDUIT FOR BELOW GRADE CONDITIONS.
3. PROVIDE PROPER GROUNDING COMPONENTS TO ACHIEVE GROUND RESISTANCE OF 10 OHMS OR LESS.

9 RAIN BIRD ESP-LXME MODULAR CONTROLLER
NOT TO SCALE

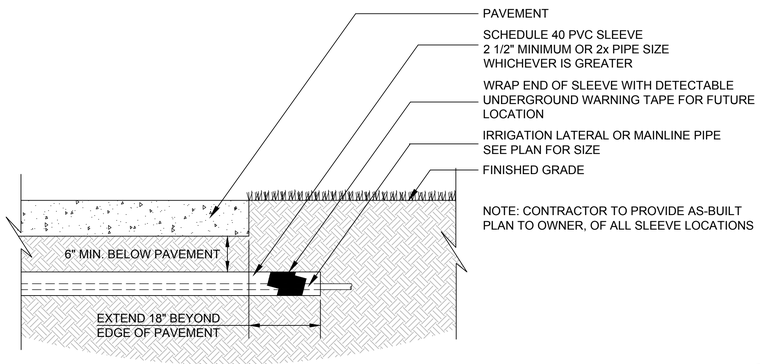

NOTE: CONTRACTOR TO PROVIDE AS-BUILT PLAN TO OWNER, OF ALL SLEEVE LOCATIONS

11 PIPE SLEEVING
NOT TO SCALE

Know what's below. Call before you dig.
CALL 811 SEVENTY–TWO HOURS PRIOR TO DIGGING, GRADING OR EXCAVATING FOR THE MARKING OF UNDERGROUND MEMBER UTILITIES

CITY APPROVAL STAMP:

OLSSON ASSOCIATES
4690 Table Mountain Drive
Suite 200
Golden, CO 80403
TEL 303.237.2072
FAX 303.237.2659
OA # 012-1417
www.olsson-associates.com

JOSEPH E. STOBERL
LA-1040
08/23/13
Original Date of Licensure
STATE OF COLORADO
LICENSED LANDSCAPE ARCHITECT

Kum & Go
6400 Westown Parkway
West Des Moines, Iowa
50266
P: 515-226-0128
F: 515-223-9873

#943 - BOULDER, COLORADO
3365 DIAGONAL HWY.

IRRIGATION DETAILS

KG PROJECT TEAM:
RDR: JXH
SDM: RJH
CPM: TLK

REVISIONS

	DATE	REVISION DESCRIPTION

DATE: 06-20-2014

SHEET NUMBER:
I1.4
31 OF 32

DWG: F:\Projects\012-1417_LDVP\Final_Plans\121417_IRR.dwg USER: jstoberl
DATE: Jun 24, 2014 8:45am XREFS: 121417_PBASE 121417_XBASE 121417_TBLK_CD 121417_LSC CD
DOCUMENT REVISION DATE: AUGUST 2012

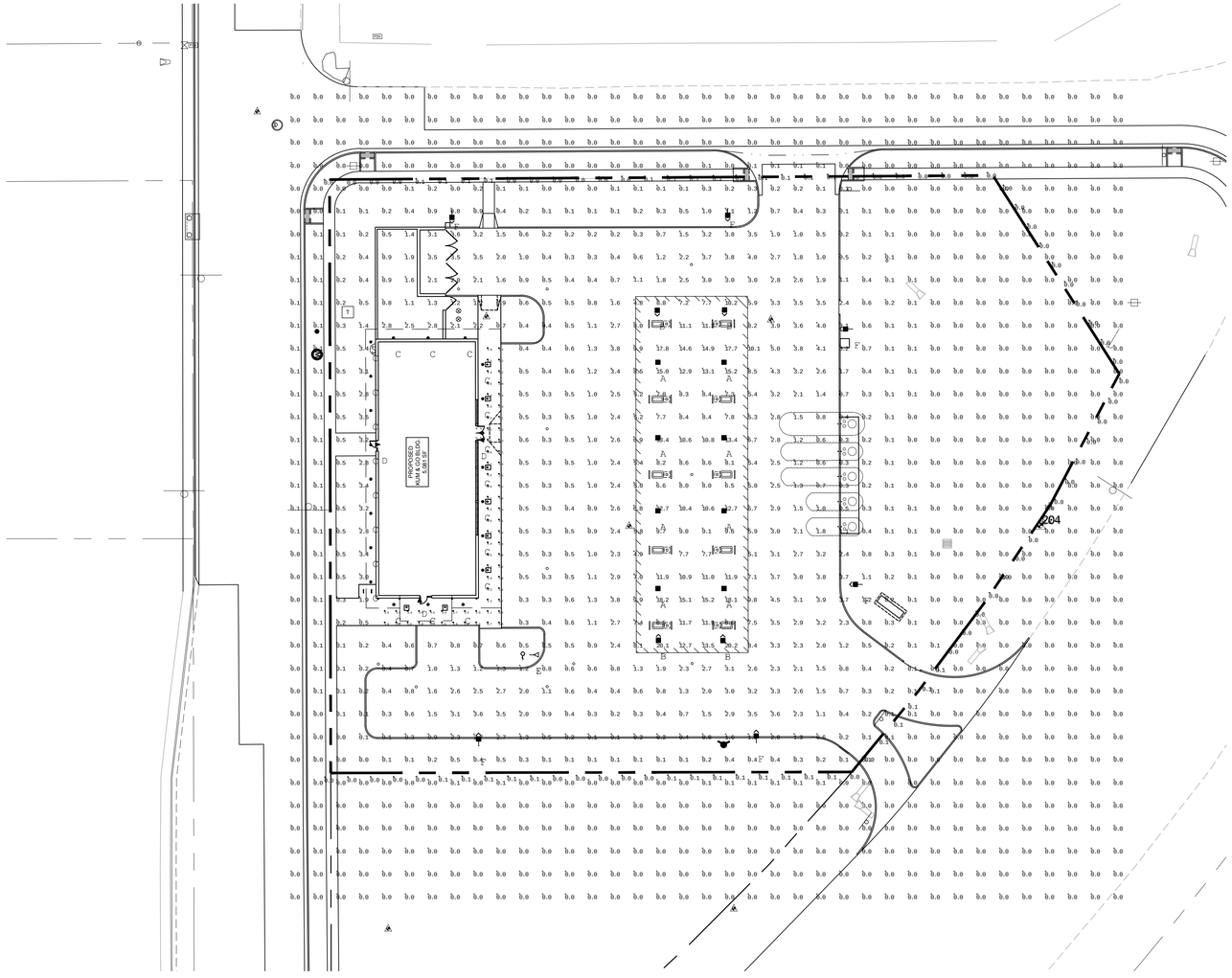

CRS-AC-LED-64
LED Crossover Gold Asymmetric Canopy Light

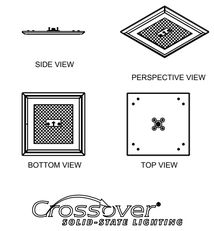

CRS-SC-LED-64
LED Crossover Gold Symmetric Canopy Light

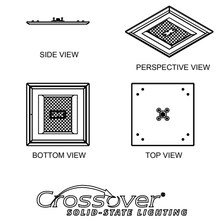

XPWS3
LED Crossover Wall Mount Light

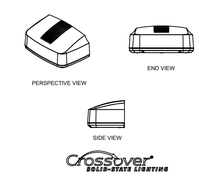

XASU
LED Crossover Area Light

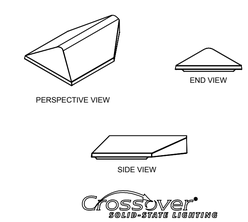

XSL2-S-50
LED Crossover Soffit

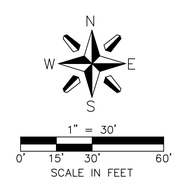

Based on the information provided, all dimensions and luminaire locations shown represent recommended positions. The engineer and/or architect must determine the applicability of the layout to existing or future field conditions.

This lighting plan represents illumination levels calculated from laboratory data taken under controlled conditions in accordance with The Illuminating Engineering Society (IES) approved methods. Actual performance of any manufacturer's luminaires may vary due to changes in electrical voltage, tolerance in lamps/LED's and other variable field conditions. Calculations do not include obstructions such as buildings, curbs, landscaping, or any other architectural elements unless noted.

Calculation Summary

Label	CalcType	Units	Avg	Max	Min	Avg/Min	Max/Min
BUILDING ENTRANCES	Illuminance	Fc	4.32	4.7	4.0	1.08	1.18
CalcPts	Illuminance	Fc	1.17	20.2	0.0	N.A.	N.A.
DISPENSER VERTICAL READINGS_4_	Illuminance	Fc	13.48	26.7	6.2	2.17	4.31
PEDESTRIAN WALKWAYS	Illuminance	Fc	2.80	4.7	0.5	5.60	9.40
PL READINGS	Illuminance	Fc	0.04	0.1	0.0	N.A.	N.A.
PARKING SUMMARY	Illuminance	Fc	0.50	1.3	0.3	1.67	4.33
UNDER CANOPY SUMMARY	Illuminance	Fc	9.66	20.2	4.8	2.01	4.21

Luminaire Schedule

Symbol	Qty	Label	Arrangement	Description	LLF	Arr. Lum. Lumens	Arr. Watts	CRI
	6	F	SINGLE	XASU-FT-LED-64-HO-CW-HSS SINGLE ON 16' POLE + 2.5' BASE	1.000	6001	88	70
	1	E	SINGLE	OFM2 WB 400 PSMU F	1.000	17947	458	65
	3	D	SINGLE	CS N DB CT - BATTERY BACK-UP LIGHTING	1.000	1	84	
	21	C	SINGLE	PDL6K-LED-HO-NW-120-SD	1.000	1041	13	70
	8	A	SINGLE	CRS-SC-LED-64-SS-CW-UE	1.000	8202	75	70
	4	B	SINGLE	CRS-AC-LED-64-SS-CW-UE	1.000	7925	75	70

OLSSON ASSOCIATES
4690 Table Mountain Drive
Suite 200
Golden, CO 80403
TEL 303.237.2072
FAX 303.237.2659
OA # 012-1417
www.olssonassociates.com

Kum & Go

6400 Westown Parkway
West Des Moines, Iowa
50266
P: 515-226-0128
F: 515-223-9873

#943 - BOULDER, COLORADO
3365 DIAGONAL HWY.

PHOTOMETRIC PLAN

KG PROJECT TEAM:
RDR: JXH
SDM: RJH
CPM: TLK

REVISIONS

	DATE	REVISION DESCRIPTION

DATE: 06-20-2014

SHEET NUMBER:
SE1.1
32 OF 32

DOCUMENT REVISION DATE: AUGUST 2012
DWG: F:\Projects\012-1417_LDVP\Final_Plans\121417_PHOT.dwg USER: sbower
DATE: Jul 01, 2014 2:46pm XREFS: 121417_PHOTO 121417_PBASE 121417_XBASE 121417_TBLK_CD