City of Boulder Planning and Development Services Center

SOLAR ACCESS GUIDE

In response to the diminishing supply and increasing cost of conventional energy sources, the city of Boulder enacted regulations to protect the use of solar energy (section 9-9-17, BRC 1981). These regulations limit the amount that new construction and additions can shade adjacent properties.

The degree of solar access protection is defined by either a 12 foot or 25 foot hypothetical "solar fence" on the property lines. The regulations are designed to protect solar access for a four hour period, between two hours before and two hours after local solar noon, on December 21st. Under most circumstances, new building elements will not be permitted to shade adjacent properties to a greater extent than the applicable solar fence.

There are three solar access areas in the city of Boulder. A list of zoning districts and their assigned solar access area follows:

Solar Access Area I: Lots are protected by a 12 foot solar fence. Solar Access Area I includes all properties in the RR-1, RR-2, RE, RL-1, and MH zones.

Solar Access Area II: Lots are protected by a 25 foot solar fence. Solar Access Area II includes all properties in the RL-2, RM, RMX, RH-1, RH-2, RH-3, RH-4, RH-5, MU-1, MU-3, and I zones.

Solar Access Area III: All other zoning districts are in Solar Access Area III. These zones are not protected by a solar fence.

When applying for a building permit for a new building or addition that is located in Solar Access Area I or II, or affects a lot located in Solar Access Area I or II, it is necessary to prepare and submit a solar analysis with your building permit application materials. If the proposed construction consists exclusively of building elements that are shorter that the solar fence in question, no solar analysis will be required. Step by step instructions for preparing a solar analysis follow.

It is necessary to obtain a topographic survey or an Improvement Location Certificate (ILC) with spot elevations for the property from a licensed surveyor to demonstrate:

- The elevations of property corners; and
- The elevations of each grade break along the north, east, and west property lines.

When submitting a building permit application, a complete solar analysis must include a solar analysis worksheet, scalable solar analysis drawing, and signed, stamped copies of any reference survey information. Topographic information can be based on USGS information or relative to a benchmark or fixed point that will not be impacted by construction and is clearly identified on the survey or ILC. If the scope of the project is an addition to an existing building, the surveyor must also provide the relative first floor elevation of the existing structure.

Note that additional development regulations may require additional surveyed elevation data such as the midpoint of the side property lines, 10 foot intervals along the side property lines, the low point within 25' of the tallest side of the structure, etc.

How to prepare a solar analysis:

1. ***Elevation of Roof Element:*** Label the roof elements on the proposed site plan. Determine the elevation of each proposed roof element using the USGS survey or ILC starting datum, and provide this elevation (y) under 'Step 1' on the Solar Analysis Worksheet on Page 3.

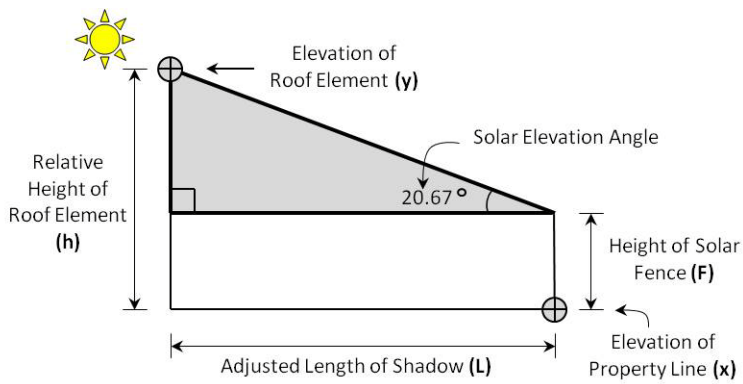

Figure 1: Section Along Shadow Length at 10 a.m. and 2 p.m.

2. ***Elevation at Property Line:*** Sketch the extent of the 10 a.m. and 2 p.m. shadows from each proposed roof element to the property line. On December 21st, in Boulder, CO, the 10 a.m. shadows will be 30 degrees west of true north and the 2 p.m. shadows will fall 30 degrees east of true north. Determine the elevation at the location where each roof element's shadow would cross the property line at 10 a.m. and 2 p.m. and provide this information (x) under 'Step 2' of the Solar Analysis Worksheet.

3. ***Relative Height of Roof Element:*** Determine the *relative* height of each roof element (h) by subtracting the elevation of grade at property line (x) for each shadow from the elevation of each roof element (y). When using the interactive Solar Analysis Worksheet, the relative height (h) will automatically calculate under 'Step 3' of the Solar Analysis Worksheet. If you are not using the interactive Solar Analysis Worksheet, use the formula below for 'Step 3'.

Note: For sloping sites, the relative height of the roof element (h) could be different at two separate times of day.

If the relative height (h) is less than the fence height (F) then there is no need to cast that shadow length (the formula's result would be negative and meaningless).

The height of the solar fence is determined by the site's zoning – See Page 1 for solar fence requirements based on zoning district.

4. ***Length of Shadow:*** Determine the adjusted length of the shadow for each roof element at each time of day. When using the interactive Solar Analysis Worksheet, the shadow length (L) will automatically calculate under 'Step 4' of the Solar Analysis Worksheet. If you are not using the interactive Solar Analysis Worksheet, use the formula at left for 'Step 4'.

Formulas for Solar Shadow Length

If you are not using the city's interactive Solar Analysis Worksheet, calculate relative height and shadow length for each element using the formulas below:

Step 3: $(y-x) = h$

Elevation of roof element (y) – Elevation of property line where the shadow would cross (x) =
Relative height of element (h)

Step 4: $(h - F) * (1/\tan(20.67^{o})) = L$

*(Relative height of element (h) – Height of solar fence (F)) * 2.65 =*
Adjusted length of shadow (L)

5. ***Sketch Shadow Length:*** Sketch the shadow length from 'Step 4' of the Solar Access Worksheet on the solar analysis drawing for all roof elements that resulted in a positive solar shadow length. **If all shadows fall within the property lines, the building is compliant with the solar access ordinance.** Any element that casts a shadow that extends past the property line is potentially a violation. See the Frequently Asked Questions for more information regarding potential violations.

SOLAR ANALYSIS WORKSHEET:

Property Zone District: Zone **Solar Fence Height:**

	Step 1	Step 2		Step 3		Step 4	
Roof Element	**Elevation of Roof Element (y)**	**Elevation of Grade at Property Line (x)**		**Relative Height of Roof Element (h)**		**Length of Shadow (L)**	
		10:00 AM	2:00 PM	10:00 AM	2:00 PM	10:00 AM	2:00 PM
Example	119.9	102.5	99.5	17.4	20.4	14.3	22.3
A						-	-
B						-	-
C						-	-
D						-	-
E						-	-
F						-	-
G						-	-
H						-	-
I						-	-
J						-	-
K						-	-

SOLAR ANALYSIS DRAWING (EXAMPLE):

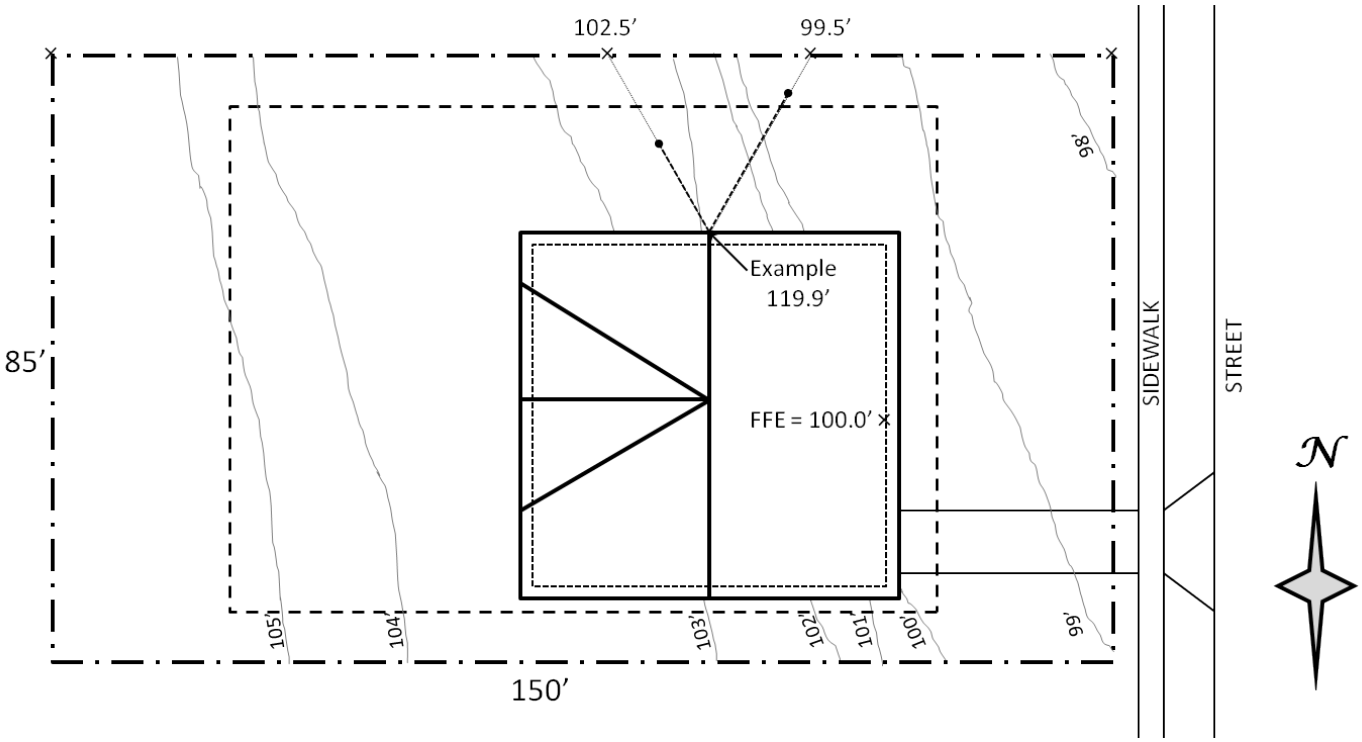

Note: The example provided above is for reference only. A complete solar analysis must include all roof elements above the height of the solar fence and must be printed to a standard scale.