Living Lab - Phase II Corridor Evaluation
"Before" Data Summary
July 2015

Living Lab – Phase II Corridor Evaluation

Evaluation Criteria	Data Collection	Data Collection Method	Data Analyzed	Before Data	After Data 1 month	After Data 3 months	After Data 6 months	After Data 12 months
SAFETY								
Crash History	Intersections and segments along Iris, Folsom, 63rd	Review City of Boulder Accident Reports	• Fatal & serious injury crashes • Crashes involving bicyclist or pedestrian • Crash types (rear end, approach turn, right angle, etc.)	Yes	✓	✓	✓	✓
Right Turn Treatments & Turning Movement Conflicts	Iris & Broadway Folsom & Canyon Folsom & Pearl 63rd & Spine	Video Observation (AM & PM Peak Hour)	• Bicycle, pedestrian, and vehicle interactions in right turn treatments • Turning motorist failure to yield to pedestrian or bicycle • Compliance with signage and striping treatment	No		✓		✓
VEHICLES								
Volume	Iris e/o 19th Folsom w/o Canyon Folsom & Pearl Folsom n/o Bluff 63rd s/o Longbow	Jamar, Miovision, Wavetronix	• Counts of traffic volume: 24 hour, AM, Noon or PM peak hour	Yes		✓		✓
Speed	Iris e/o 19th Folsom n/o Bluff 63rd s/o Longbow	Jamar, Miovision, Wavetronix	• Average daily speed of vehicles • 85th Percentile speed • Speed limit	Yes		✓		✓

Evaluation Criteria	Data Collection	Data Collection Method	Data Analyzed	Before Data	After Data 1 month	After Data 3 months	After Data 6 months	After Data 12 months
VEHICLES – cont'd								
Traffic Neighborhood Diversion	Iris Corridor: Broadway, 14th, 15th, 16th, Iris Ct., 17th, 19th, Hermosa/22nd, 25th, Folsom *To be collected:* *Glenwood, Grape, Hawthorne, Kalmia, Linden, Twin Lakes*	Jamar, Miovision, Wavetronix	• Counts of traffic volume: 24 hour, AM, Noon or PM peak hour	Yes		✓		✓
Left Turn from Side Streets	Iris & 16th Iris & 22nd	Video Observation and Turning Movement Counts	• Measure of delay in executing left turn movements from side streets along Iris corridor	Yes		✓		✓
Corridor Travel Time	Iris Corridor Folsom Corridor 63rd Corridor	Field Data Collection or Acyclica Data	• Average AM & PM peak driving time by segment for each corridor	Yes	✓	✓	✓	✓
Level of Service (LOS) Analysis	Iris Corridor Folsom Corridor 63rd Corridor	Turning Count Movement Data (AM & PM Peak Hour)	• Synchro capacity analysis for each intersection turning movement using data collected during City turning movement counts	Yes				✓
Left Turn Queue Length	Iris & Broadway Folsom & Canyon Folsom & Pearl	Video Observation (PM Peak Hour)	• Average & maximum queue • Number of times left-turn queue blocks through lane	Yes		✓		✓
BICYCLES								
Volume	Iris & Broadway 1400 Block Iris* Iris & 19th Iris & Folsom Kalmia & 16th* Folsom s/o Arapahoe* Folsom & Arapahoe Folsom s/o South* Folsom & Canyon Folsom & Pearl Folsom & Pine Folsom s/o Canyon* Folsom & Valmont 63rd s/o Spine*	Before: Miovision counters (AM, Noon, PM Peak and Daylight* Hours) Video Observation (AM & PM Peak Hour) After: 24 Hour Counters* Video Observation (AM & PM Peak Hour)	• Bicycle volume by direction and time of day	Yes	✓	✓	✓	✓

Evaluation Criteria	Data Collection	Data Collection Method	Data Analyzed	Before Data	After Data 1 month	After Data 3 months	After Data 6 months	After Data 12 months
BICYCLES – cont'd								
Demographics	Folsom & Pearl Iris & Broadway 63rd & Spine	Video Observation (AM & PM Peak Hour)	• Ratio of male, female, and children cycling on the road	Yes		✓		✓
PEDESTRIANS								
Crossing Volume	Folsom & Arapahoe Folsom & Canyon Folsom & Pearl Folsom & Pine Folsom & Valmont Iris & Broadway Iris & 19th Iris & Folsom 63rd & Spine	Miovision counters (AM, Noon, PM Peak Hour) Video Observation (AM & PM Peak Hour)	• Number of crossing pedestrians by direction and time of day	Yes		✓		✓
TRANSIT								
Ridership	Transit Stops on Iris and 63rd Corridors	RTD data	• Number of passengers boarding and alighting at stops along rightsized corridors	Yes				✓
Bus Transition From Buffer to Travel Lane	Iris & 22nd/Hermosa RTD stop	Observation (PM peak)	• Maximum and average length of time buses wait to merge	No		✓		✓
Transit and Bicycle Interactions	Iris & 22nd/Hermosa RTD stop	Observation (PM Peak)	• Interactions and yielding behaviors of cyclists, transit vehicles in buffer, and motorists in travel lane	No		✓		✓
FACILITY DESIGN								
Overall Maintenance	Iris Corridor Folsom Corridor 63rd Corridor	Public Works Department	• Snow, ice, and debris removal along corridors	No		✓	✓	✓
Emergency Response Times	Iris Corridor Folsom Corridor 63rd Corridor	Input from Boulder Fire-Rescue Department	• Response time of emergency vehicles along corridors • Ability of emergency vehicles to maneuver within corridors	No	✓	✓	✓	✓
PUBLIC FEEDBACK								
Public Feedback	All Corridors	Open Houses, Online Feedback, Popup Demonstrations	• Online and community feedback	Yes	✓	✓	✓	✓

Evaluation Criteria: Crash History

Folsom Street Crash Summary

Intersection/Segment	Total Crashes 2012	2013	2014	Total	Correctable Crashes		Ped	Bike	Fatal	Serious Injury
Folsom St and Valmont Rd	6	5	6	17	2	12%	0	2	0	0
Folsom St and Bluff St	1	0	3	4	0	0%	0	0	0	0
Folsom St and Mapleton Ave	0	0	1	1	0	0%	0	1	0	0
Folsom St and Pine St	9	8	4	21	2	10%	0	2	0	1
Folsom St and Spruce St	5	5	0	10	0	0%	0	1	0	0
Folsom St and Pearl St	11	7	8	26	3	12%	0	4	0	0
Folsom St and Walnut St	1	3	1	5	0	0%	1	0	0	0
Subtotal	**33**	**28**	**23**	**84**	**7**	**8%**	**1**	**10**	**0**	**1**
Folsom St and South St	1	2	0	3	1	33%	0	2	0	0
Folsom St: South St to Canyon	3	1	0	4	1	25%	0	2	0	0
Subtotal	**37**	**31**	**23**	**91**	**9**	**10%**	**1**	**14**	**0**	**1**
Folsom St and Canyon Blvd	16	28	25	69	0	0%	3	6	0	2
Folsom St: Canyon Blvd to Goss St	1	2	0	3	1	33%	0	1	0	0
Folsom St and Goss St	5	0	0	5	1	20%	0	0	0	0
Folsom St and Grove St	2	2	2	6	0	0%	0	2	0	0
Folsom St and Arapahoe Ave	24	21	23	68	5	7%	1	6	0	0
Total	**85**	**84**	**73**	**242**	**16**	**7%**	**5**	**29**	**0**	**3**
Folsom St: Arapahoe to Colorado	7	3	1	11	0	0%	2	5	0	1
Total	**92**	**87**	**74**	**253**	**16**	**6%**	**7**	**34**	**0**	**4**

Evaluation Criteria: Crash History

Iris Avenue Crash Summary

Intersection/Segment	Total Crashes				Correctable Crashes		Ped	Bike	Fatal	Serious Injury
	2012	2013	2014	Total						
Iris Ave and 13th St	3	0	1	4	2	50%	0	0	0	0
Iris Ave and 14th St	1	1	0	2	0	0%	0	0	0	0
Iris Ave and 15th St	1	1	1	3	1	33%	1	0	0	0
Iris Ave and 16th St	2	5	4	11	4	36%	0	0	0	0
Iris Ave and Iris Ct	0	1	1	2	0	0%	0	0	0	0
Iris Ave and 17th St	1	0	0	1	1	100%	0	0	0	0
Iris Ave and 19th St	4	2	1	7	0	0%	0	2	0	1
Iris Ave and 22nd St	1	0	0	1	0	0%	0	0	0	0
Iris Ave and Hermosa Dr	0	0	2	2	1	50%	0	0	0	0
Iris Ave and 25th St	1	0	1	2	0	0%	0	1	0	0
Iris Ave and Folsom St	4	12	8	24	3	13%	0	6	0	0
Total	**18**	**22**	**19**	**59**	**12**	**20%**	**1**	**9**	**0**	**1**
								3/yr		

63rd Street Crash Summary

Intersection/Segment	Total Crashes				Correctable Crashes		Ped	Bike	Fatal	Serious Injury
	2012	2013	2014	Total						
63rd St and Lookout Rd	11	4	8	23	0	0%	1	0	0	0
63rd St and Spine Rd	6	7	5	18	0	0%	0	1	0	0
63rd St and Longbow Dr	2	0	1	3	0	0%	0	0	0	0
63rd and Gunbarrel/Nautilus	2	0	1	3	3	100%	0	0	0	0
Total	**21**	**11**	**15**	**47**	**3**	**6%**	**1**	**1**	**0**	**0**

Additional data:
Safety Analysis for Phase II Projects (5-19-15)

Evaluation Criteria: Vehicle Volume and Speed

Corridor Volumes and Speed

Count Location			Month-Year	ADT Weekday (vpd)	Average Speed (mph)	85th Percentile Speed (mph)	Speed Limit (mph)	AM Peak (vph)	Noon (vph)	PM (vph)
Iris Avenue	e/o	19th Street	Mar-15	22,900	35	39	35			
Iris Avenue	w/o	16th Street	Jul-15	17,410	35	39	35			
Folsom Street	n/o	Bluff Street	Apr-15	15,780	35	39	30			
Folsom Street	s/o	Pearl Street	Apr-15					1,218	1,298	1,601
Folsom Street	n/o	Canyon Blvd	Jun-15	18,970	29	34	30			
63rd Street	s/o	Longbow Drive	May-15	11,090	41	45	40			

ADT = average daily traffic
vpd = vehicles per day
mph = miles per hour
vph = vehicles per hour

Evaluation Criteria: Traffic Neighborhood Diversion

Iris - Nearby Street Volumes and Speed

Count Location			Month-Year	ADT-Weekday (vpd)	Average Speed (mph)	85th Percentile Speed (mph)	Speed Limit (mph)
Broadway	n/o	Iris Ave	May-15	22,600	33	37	35
Broadway	s/o	Iris Ave	Mar-15	24,260	33	38	30
16th Street	n/o	Iris Ave	May-15	1,240	20	24	25
19th Street	n/o	Iris Ave	May-15	6,830	27	32	30
19th Street	s/o	Iris Ave	May-15	4,900	26	29	30
Folsom Street	s/o	Iris Ave	May-15	10,680	29	31	30
Glenwood	w/o	Folsom St	*To be collected prior to Iris installation*				
Grape	w/o	Folsom St	*To be collected prior to Iris installation*				
Hawthorne	w/o	Folsom St	*To be collected prior to Iris installation*				
Kalmia	w/o	16th St	*To be collected prior to Iris installation*				
Kalmia	w/o	Catalpa Wy	*To be collected prior to Iris installation*				
Linden	w/o	26th St	*To be collected prior to Iris installation*				
Twin Lakes Rd.	n/o	Idylwild Ct.	*To be collected prior to Iris installation*				

Count Location			Month-Year	AM Peak (vph)	Noon (vph)	PM (vph)
13th Street	s/o	Iris Avenue	Jan-15	14	--	22
14th Street	s/o	Iris Avenue	Jan-15	7	--	17
15th Street	s/o	Iris Avenue	Jan-15	17	--	23
16th Street	n/o	Iris Avenue	Jan-15	106	--	101
16th Street	s/o	Iris Avenue	Jan-15	25	--	27
Iris Ct.	n/o	Iris Avenue	Jan-15	11	--	12
17th Street	n/o	Iris Avenue	Jan-15	6	--	11
22nd Street	n/o	Iris Avenue	Jan-15	27	--	41
Hermosa Street	s/o	Iris Avenue	Jan-15	10	--	13
25th Street	s/o	Iris Avenue	Jan-15	12	--	13

Evaluation Criteria: Left Turn from Side Streets

See "Iris Side Street Analysis Summary 6-1-15"

Evaluation Criteria: Corridor Travel Time

Field-Measured Travel Time by Corridor

Corridor	Month-Year	Direction	Average Travel Time (min)	
			AM	PM
Iris (Broadway - Folsom)	Nov-14	eastbound	2:26	2:03
	Nov-14	westbound	2:40	2:53
Folsom (Arapahoe - Valmont)	Nov-14	northbound	2:18	3:32
	Nov-14	southbound	3:03	3:20
63rd (Lookout to Gunbarrel)	Jul-15	northbound	1:11	1:17
	Jul-15	southbound	1:03	1:14

Additional data:

Technical Analysis Memo 4-29-15

Evaluation Criteria: Level of Service (LOS)

Iris Ave - Broadway to Folsom

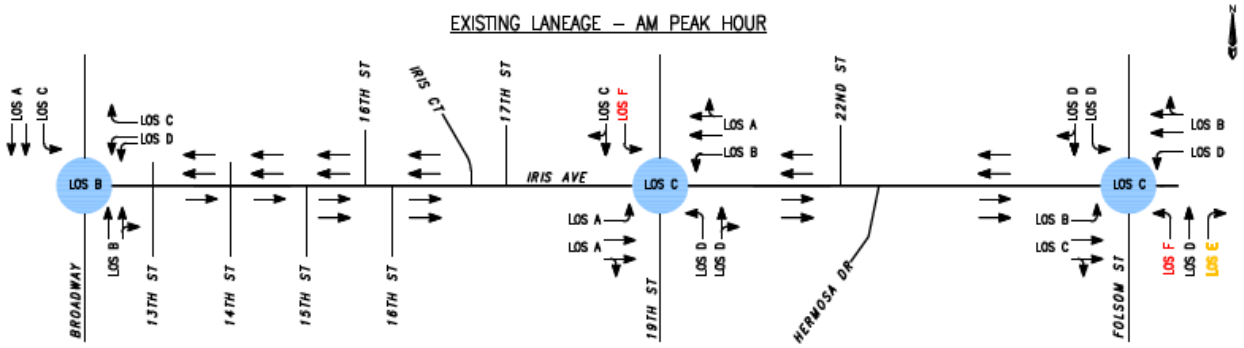

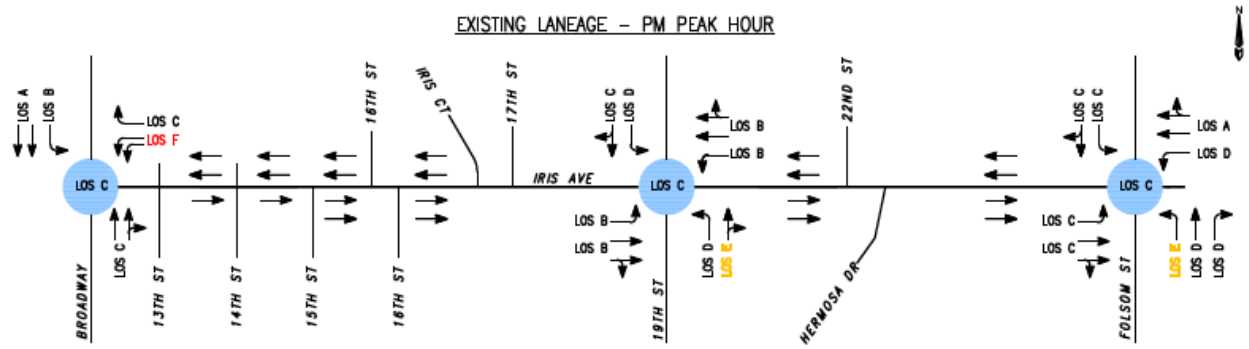

Evaluation Criteria: Level of Service (LOS)

Folsom St - Arapahoe Ave to Valmont St

EXISTING LANEAGE – AM PEAK HOUR

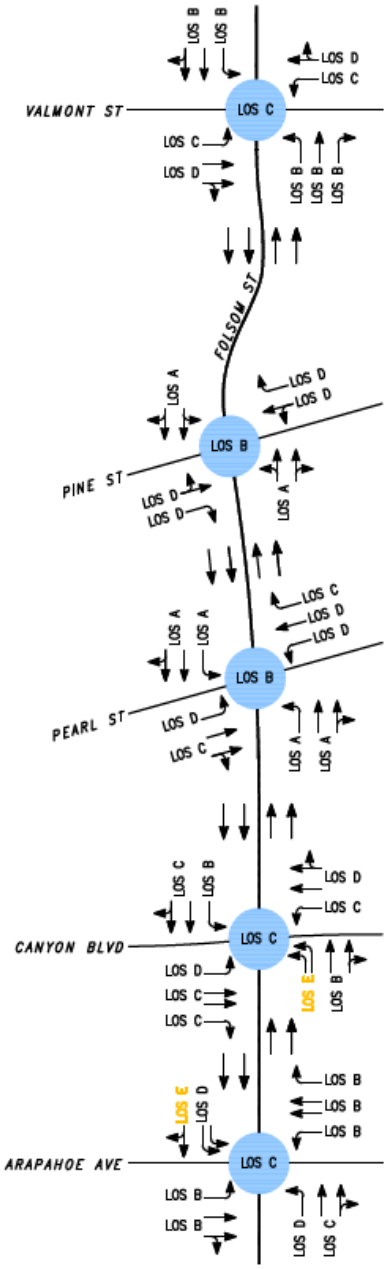

EXISTING LANEAGE – PM PEAK HOUR

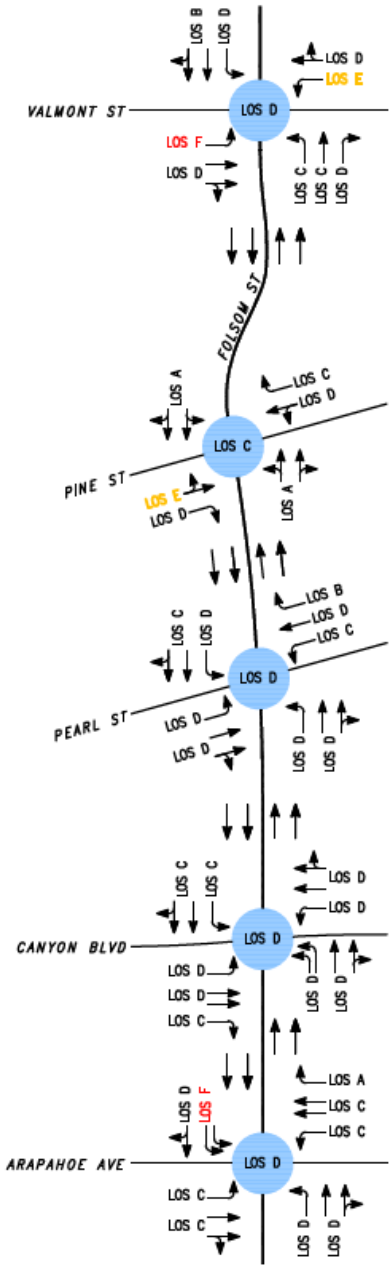

Evaluation Criteria: Level of Service (LOS)

63rd St - Lookout Rd to Spine Rd

EXISTING LANEAGE – AM PEAK HOUR

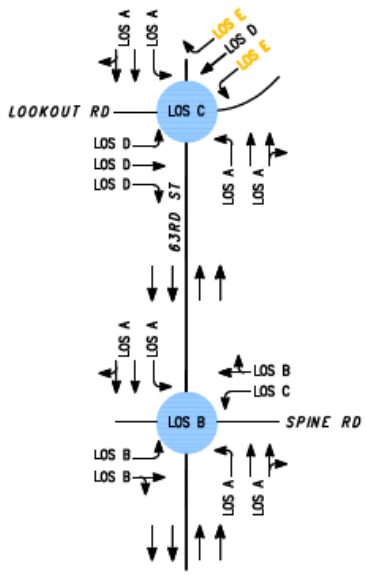

EXISTING LANEAGE – PM PEAK HOUR

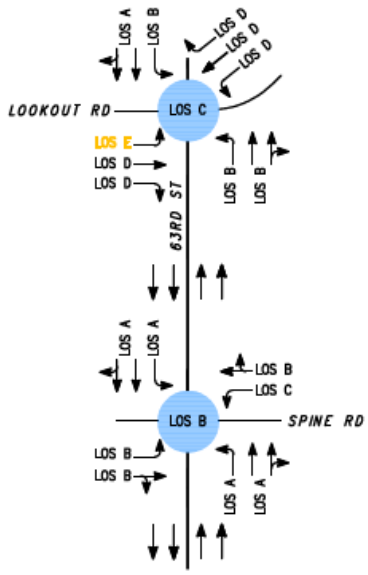

Evaluation Criteria: Left Turn Queue Length

PM Peak Hour Left Turn Queue Length

Intersection	Direction	Date	Number Left Turn Lanes	# of Vehicles in Left Turn Queue		% Through Lane Blocked by LT Lane	% of PM Peak Hour Left Turn Lane Did Not Clear During Cycle
				Average	Maximum		
Folsom St and Canyon Blvd	NB	Apr-15	2	4.5	11	0%	0%
Folsom St and Canyon Blvd	SB	Apr-15	1	3.7	9	16%	20%
Folsom St and Pearl St	NB	Apr-15	1	2.3	8	32%	0%
Iris Ave and Broadway Ave	WB	May-15	2	18.5	26	0%	89%

NB = northbound
SB = southbound
WB = westbound

Evaluation Criteria: Bicyclist Volume and Demographics

Bicyclists Riding on Roadways During "Daylight" Hours (6am -9pm)

Iris Avenue

Location	Date	Time	Eastbound Bicycles	Westbound Bicycles	Total Bicycles
1400 Block Iris	7/1/2015	6:00 AM - 9:00 PM	89	72	161

Folsom Street

Location	Date	Time	Northbound Bicycles	Southbound Bicycles	Total Bicycles
Folsom north of Pine	6/30/2015	6:00 AM - 9:00 PM	394	422	816
Folsom south of South	6/30/2015	6:00 AM - 9:00 PM	366	368	734

Note: Bicycle volumes to be collected on Kalmia and 63rd prior to Iris and 63rd installations.

24 Hour Automated Eco-Counter Roadway Bicyclist Volume by Year
Folsom at Boulder Creek (south of Arapahoe)

Month	2012	2013	2014	2015
January	10,618	13,855	9,395	*no data*
February	11,184	14,018	10,052	10,242
March	20,183	9,139	15,990	16,832
April	26,224	*no data*	22,341	21,119
May	24,175	2,385	20,505	15,924
June	23,186	23,479	24,545	23,180
July	23,333	20,572	21,437	
August	29,501	22,694	14,076	
September	37,102	12,491	*no data*	
October	30,547	30,481	25,908	
November	22,573	19,140	11,629	
December	13,545	8,718	7,779	

Evaluation Criteria: Bicyclist Volume and Demographics

Summary: Bicyclists Riding on Roadways by Intersection

Intersection	Date	Cyclists on the Road		
		Total AM	Total PM	Total Noon
Iris @ Folsom	6/11/2014	14	13	8
Iris @ 19th	5/29/2014	16	10	8
Iris @ Broadway	5/26/2015	13	4	--
Folsom @ Valmont	7/9/2013	75	82	34
Folsom @ Pine	6/10/2014	88	94	48
Folsom @ Pearl	4/28/2015	61	102	34
Folsom @ Canyon	8/7/2014	55	107	39
Folsom @ Arapahoe	10/21/2014	85	148	63
63rd @ Spine	6/26/2015	16	6	--

Evaluation Criteria: Bicyclist Volume and Demographics

Iris Avenue

Intersection	Date	Hour	Bicycles on Road Eastbound	Bicycles on Road Westbound	Bicycles on Road Total
Iris @ Folsom	6/11/2014	AM	9	5	14
		Noon	2	6	8
		PM	8	5	13
		Total	**19**	**16**	**35**
Iris @ 19th	5/29/2014	AM	9	7	16
		Noon	6	2	8
		PM	8	2	10
		Total	**23**	**11**	**34**
Iris @ Broadway	5/26/2015	AM	10	3	13
		PM	2	2	4
		Total	**12**	**5**	**17**

Folsom Street

Intersection	Date	Hour	Bicycles on Road Northbound	Bicycles on Road Southbound	Bicycles on Road Total
Folsom @ Valmont	7/9/2013	AM	14	61	75
		Noon	17	17	34
		PM	55	27	82
		Total	**86**	**105**	**191**
Folsom @ Pine	6/10/2014	AM	23	65	88
		Noon	26	22	48
		PM	62	32	94
		Total	**111**	**119**	**230**
Folsom @ Pearl	4/28/2015	AM	10	51	61
		Noon	18	16	34
		PM	76	26	102
		Total	**104**	**93**	**197**
Folsom @ Canyon	8/7/2014	AM	18	37	55
		Noon	19	20	39
		PM	62	45	107
		Total	**99**	**102**	**201**
Folsom @ Arapahoe	10/21/2014	AM	17	68	85
		Noon	36	27	63
		PM	113	35	148
		Total	**166**	**130**	**296**

Evaluation Criteria: Bicyclist Volume and Demographics

63rd Street

Intersection	Date	Hour	Bicycles on Road Northbound	Southbound	Total
63rd @ Spine	6/26/2015	AM	11	5	16
		PM	3	3	6
		Total	**14**	**8**	**22**

Demographics

Corridor	Male	Female	Family
Iris (e/o 19th)	76%	24%	0%
Folsom (n/o Pine)	72%	28%	4%
63rd (s/o Spine)	73%	27%	0%

Evaluation Criteria: Pedestrian Crossing Volume

Crossing Pedestrians by Intersection - Summary

Intersection	Date	Total AM	Total PM	Total Noon
Iris @ Folsom	6/11/2014	14	7	13
Iris @ 19th	5/29/2014	15	14	5
Iris @ Broadway	5/26/2015	69	33	--
Folsom @ Valmont	7/9/2013	14	18	10
Folsom @ Pine	6/10/2014	7	15	4
Folsom @ Pearl	4/28/2015	21	38	13
Folsom @ Canyon	8/7/2014	14	57	23
Folsom @ Arapahoe	10/21/2014	35	91	59
63rd @ Spine	6/25/2015	31	6	--

Evaluation Criteria: Pedestrian Crossing Volume

Iris Avenue

			Pedestrians				
Intersection	**Date**	**Hour**	**Southbound**	**Westbound**	**Northbound**	**Eastbound**	**Total**
Iris @ Folsom	6/11/2014	AM	5	2	5	2	14
		Noon	3	3	7	0	13
		PM	2	1	1	3	7
		Total	**10**	**6**	**13**	**5**	**34**
Iris @ 19th	5/29/2014	AM	4	5	4	2	15
		Noon	2	2	0	1	5
		PM	4	4	1	5	14
		Total	**10**	**11**	**5**	**8**	**34**
Iris @ Broadway	5/26/2015	AM	24	18	12	15	69
		PM	8	8	12	5	33
		Total	**32**	**26**	**24**	**20**	**102**

Evaluation Criteria: Pedestrian Crossing Volume

Folsom Street

Intersection	Date	Hour	Pedestrians Southbound	Westbound	Northbound	Eastbound	Total
Folsom @ Valmont	7/9/2013	AM	8	6	7	6	14
		Noon	2	8	5	3	10
		PM	12	6	13	6	18
		Total	**22**	**20**	**25**	**15**	**42**
Folsom @ Pine	6/10/2014	AM	4	3	2	4	7
		Noon	1	3	2	5	4
		PM	8	7	2	3	15
		Total	**13**	**13**	**6**	**12**	**26**
Folsom @ Pearl	4/28/2015	AM	10	11	10	11	21
		Noon	8	5	6	20	13
		PM	24	14	15	43	38
		Total	**42**	**30**	**31**	**74**	**72**
Folsom @ Canyon	8/7/2014	AM	9	5	12	10	14
		Noon	7	16	19	12	23
		PM	22	35	17	40	57
		Total	**38**	**56**	**48**	**62**	**94**
Folsom @ Arapahoe	10/21/2014	AM	16	19	7	38	35
		Noon	23	36	37	55	59
		PM	39	52	38	81	91
		Total	**78**	**107**	**82**	**174**	**185**

Evaluation Criteria: Pedestrian Crossing Volume

63rd Street

			Pedestrians				
Intersection	**Date**	**Hour**	**Southbound**	**Westbound**	**Northbound**	**Eastbound**	**Total**
63rd @ Spine	6/25/2015	AM	14	2	3	12	31
		PM	1	3	1	1	6
		Total	**15**	**5**	**4**	**13**	**37**

Evaluation Criteria: Transit Ridership

Average Daily Transit Boardings and Alightings, January 1, 2015 - May 15, 2015

Iris Corridor

Stop Location	Stop ID	Route(s)	Average Daily		AM Peak		PM Peak	
			Boardings	Alightings	Boardings	Alightings	Boardings	Alightings
Iris & 13th	14595	208	5.98	32.36	0.37	7.25	2.72	9.73
Iris & Broadway	14596	208	30.31	7.83	5.19	2.02	9.44	2
Iris & 16th	14597	208	4.61	3.68	0.77	0.07	1.14	2.64
Iris & Iris Ct	14598	208	3.87	3.56	2.5	0.14	0	1.18
Iris & 19th	14599	208	4.95	1.43	1.38	0.07	0.89	0.77
Iris & 19th	14600	208	0.96	5.32	0.37	0.54	0.2	2.39
Iris & 22nd	14601	208	1.93	0.96	1.28	0.07	0.13	0.76
Iris & Folsom	14611	208	12.22	0.73	5.71	0.13	1.98	0.27
Iris & Folsom	14612	208	1.38	7.79	1.01	0.52	0.25	4.42
Iris & Hermosa	14613	208	0.33	1.04	0.13	0	0	0.47

63rd Corridor

Stop Location	Stop ID	Route(s)	Average Daily		AM Peak		PM Peak	
			Boardings	Alightings	Boardings	Alightings	Boardings	Alightings
63rd & Longbow	19689	205	2.95	0.23	0.02	0.08	1.82	0.09
63rd & Gunbarrel	19690	205	48.85	9.25	10.74	2.22	13.61	1.65
63rd & Nautilus	19809	205	3.72	48.41	0.66	15.53	0.27	9.89
63rd & Longbow	19810	205	0.06	4.63	0.02	3	0	0.09
63rd & Lookout	25942	205	0	1.42	0	0.24	0	0.14

Source: RTD

Folsom Corridor

Transit ridership data is collected at the route level for the HOP.