ROW INSPECTOR APPROVAL REQUIRED PRIOR TO INSTALLATION.

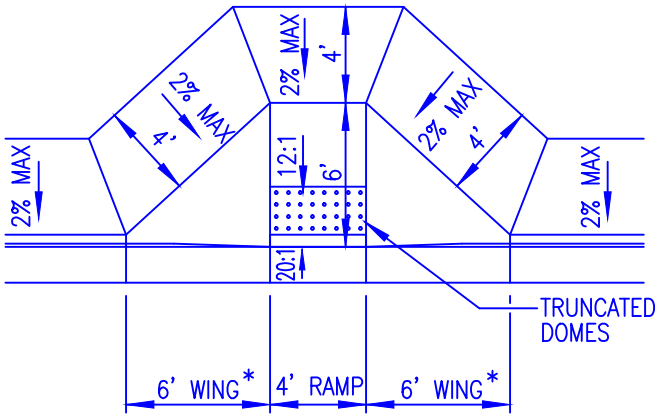

OPTION A

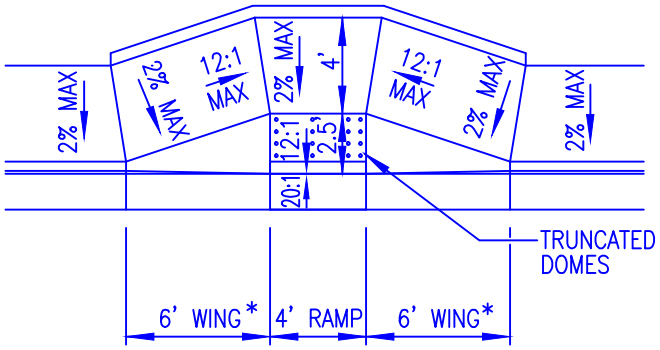

OPTION B

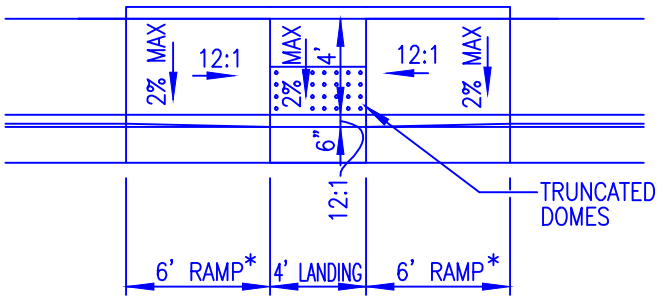

OPTION C

*DISTANCE MAY VARY DEPENDING ON ROADWAY GRADE.

DRAWN BY: PLS CHECKED BY: MJS APPROVED BY: DIRECTOR OF PUBLIC WORKS	CITY OF BOULDER, COLORADO ATTACHED SIDEWALK CURB RAMP OPTIONS	ISSUED: OCT 6, 2009 REVISED: DRAWING NO. 2.07