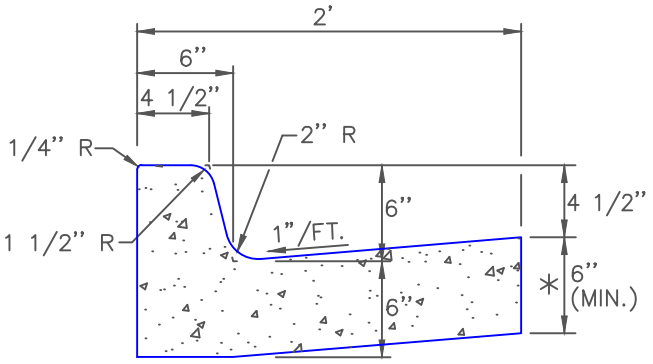

STANDARD 6"

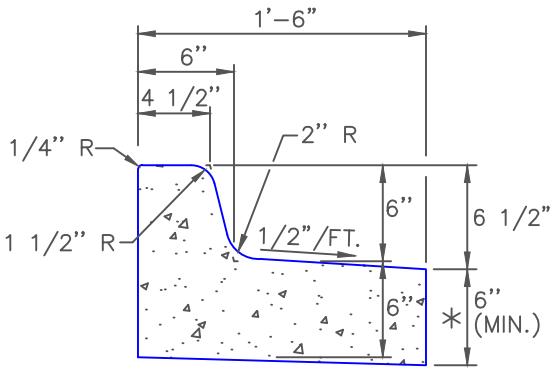

OUTFALL/MEDIAN

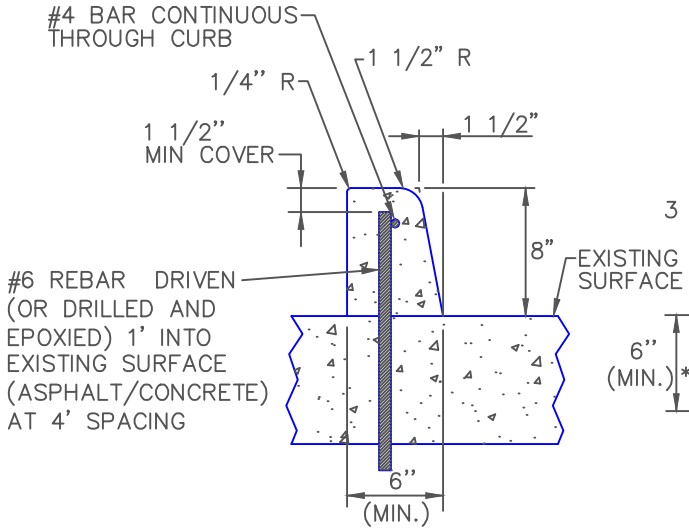

DOWELLED BARRIER CURB

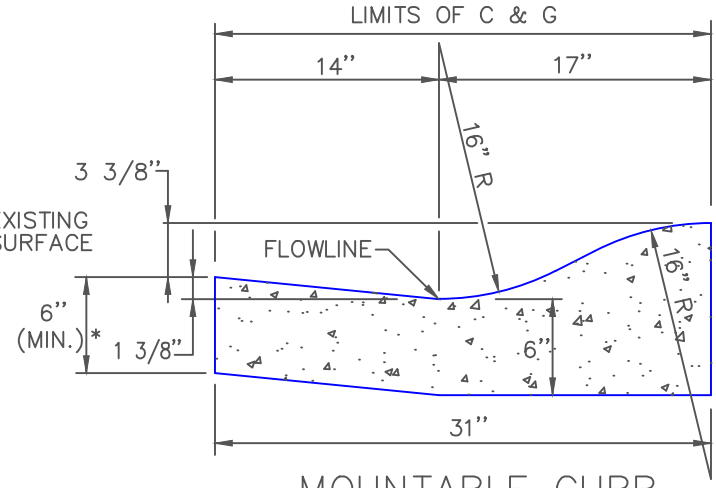

MOUNTABLE CURB

(NOTE: FOR USE ONLY IN DETACHED SINGLE-FAMILY RESIDENTIAL STREETS)

NOTES:

1. ALL EXPOSED CONCRETE SHALL HAVE A BROOM FINISH.
2. EXPANSION JOINTS SHALL BE INSTALLED AT 500 FOOT MAXIMUM INTERVALS SEE EXPANSION JOINT DETAIL.
3. CONTRACTION JOINTS SHALL BE INSTALLED AT END OF CURB RETURNS AND AT 10 FOOT MAXIMUM INTERVALS – SEE CURB CONTRACTION JOINT DETAIL.
4. WHEN JOINING EXISTING CURB, PROVIDE A MINIMUM OF THREE #4 x 18" DOWELS (9" EMBEDMENT) EVENLY SPACED.

* 5. WHEN PLACING CURB ADJACENT TO CONCRETE PAVEMENT, THICKEN GUTTER TO MATCH PAVEMENT DEPTH.

DRAWN BY: JSH CHECKED BY: RJH APPROVED BY: DIRECTOR OF PUBLIC WORKS	CITY OF BOULDER, COLORADO CURB AND GUTTER	ISSUED: JULY 2, 1998 REVISED: OCT 6, 2009 DRAWING NO. 2.01.A