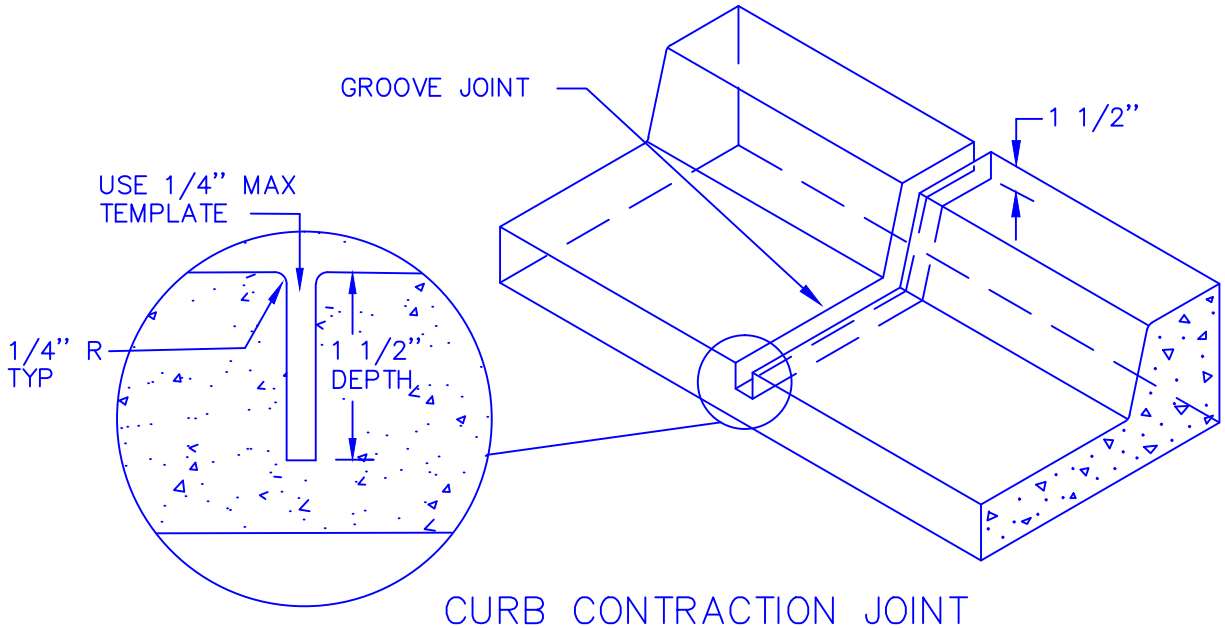

CURB CONTRACTION JOINT

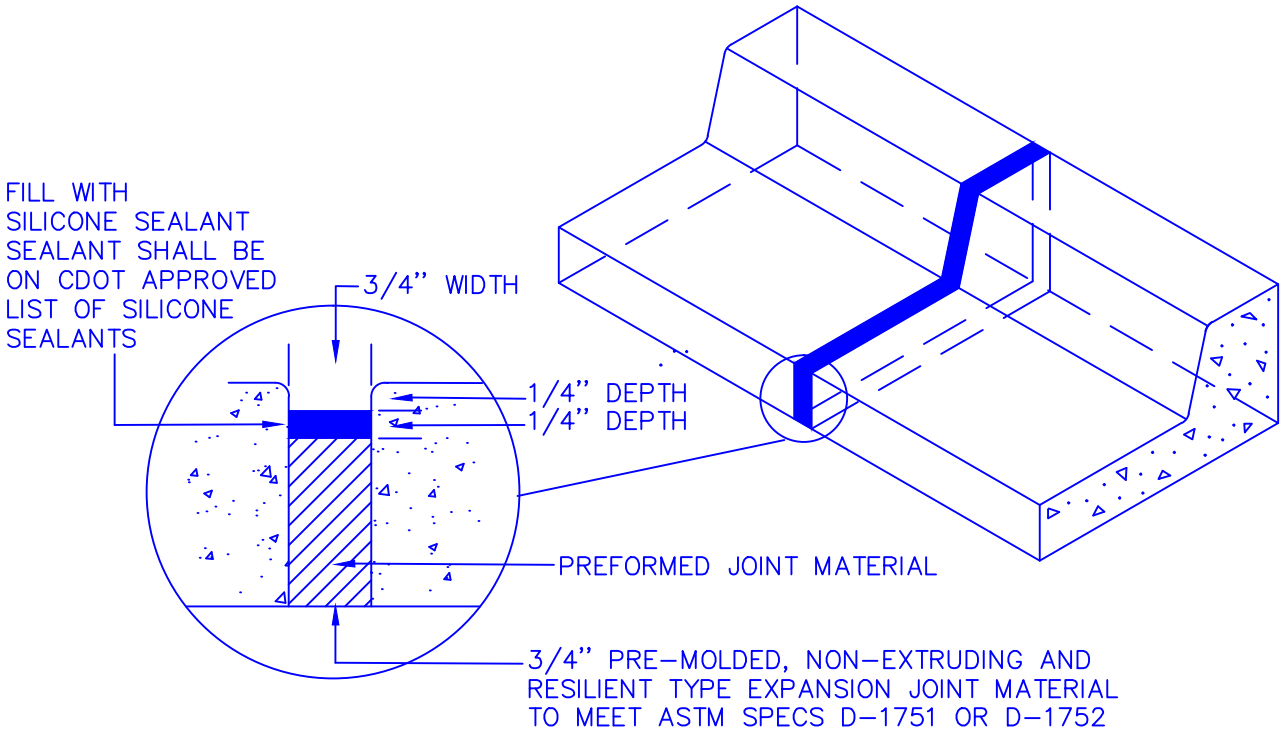

CURB EXPANSION JOINT

DRAWN BY: JSH CHECKED BY: WGH APPROVED BY: DIRECTOR OF PUBLIC WORKS	CITY OF BOULDER, COLORADO CURB AND GUTTER JOINTS	ISSUED: JULY 2, 1998 REVISED: OCT 6, 2009 DRAWING NO. 2.01.B