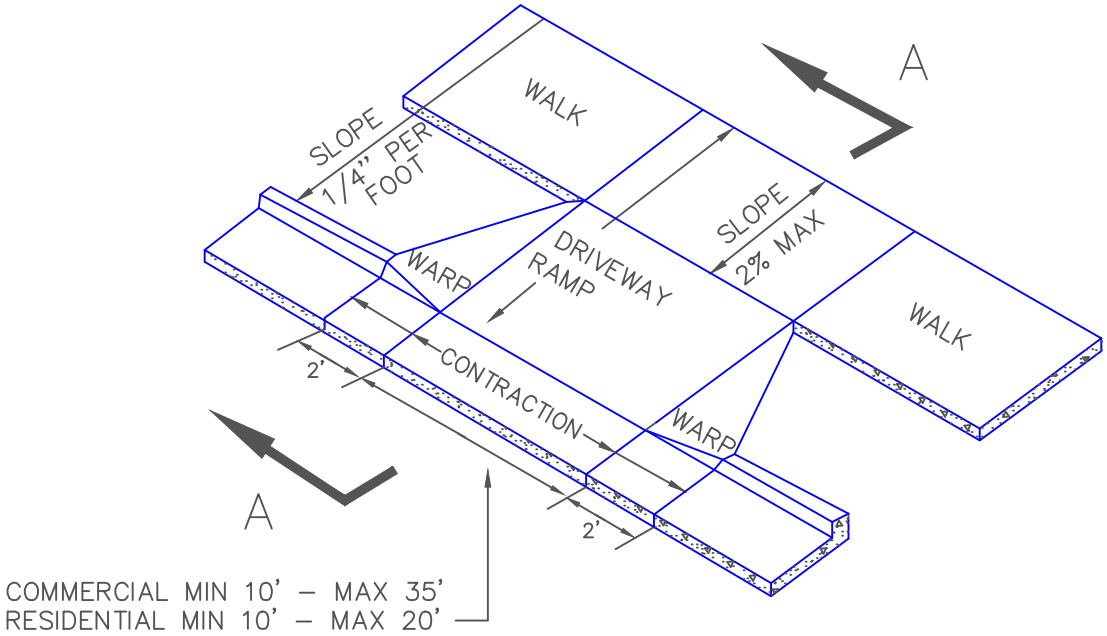

NOTE: CONTRACTION JOINTS ARE REQUIRED AT EACH SIDE OF WARPED SECTION AND EVERY 10 FEET (MAXIMUM) ALONG RAMP DRIVE.

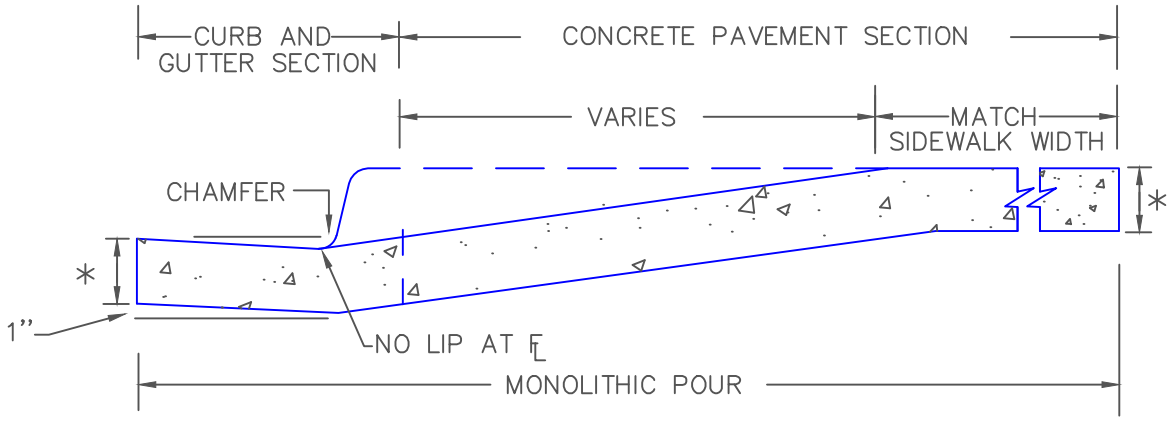

SECTION A–A

* 6" RESIDENTIAL
8" COMMERCIAL AND PUBLIC ALLEYS

DRAWN BY: JSH CHECKED BY: WGH APPROVED BY: DIRECTOR OF PUBLIC WORKS	CITY OF BOULDER, COLORADO DRIVEWAY RAMP DETACHED WALK	ISSUED: JULY 2, 1998 REVISED: OCT 6, 2009 DRAWING NO. 2.21