NOTES:

EXPOSED CONCRETE SURFACE TO BE BROOM FINISHED.
PAD SIZE MAY VARY AS DIRECTED BY THE ENGINEER.
PAD IS TO BE CONSTRUCTED WITH CLASS B CONCRETE.
EXCAVATION AND/OR EMBANKMENT REQUIRED FOR PAD CONSTRUCTION WILL NOT BE PAID FOR SEPERATELY, BUT SHALL BE INCLUDED IN THE COST OF THE PAD. CONCRETE SHALL BE SLOPED AT 2% TO DRAIN.

* 3'-4" MINIMUM WHEN INSTALLED PERPENDICULAR TO A WALL OR CURB.

** 3' MINIMUM WHEN INSTALLED PARALLEL TO A WALL OR CURB. 5' MINIMUM SEPARATION FROM CURB FACE WHEN INSTALLED ADJACENT TO A CURB WITH "HEAD-IN" AUTOMOBILE PARKING.

*** 10' MINIMUM IF MORE THAN TWO "U" RACKS IN A SERIES.

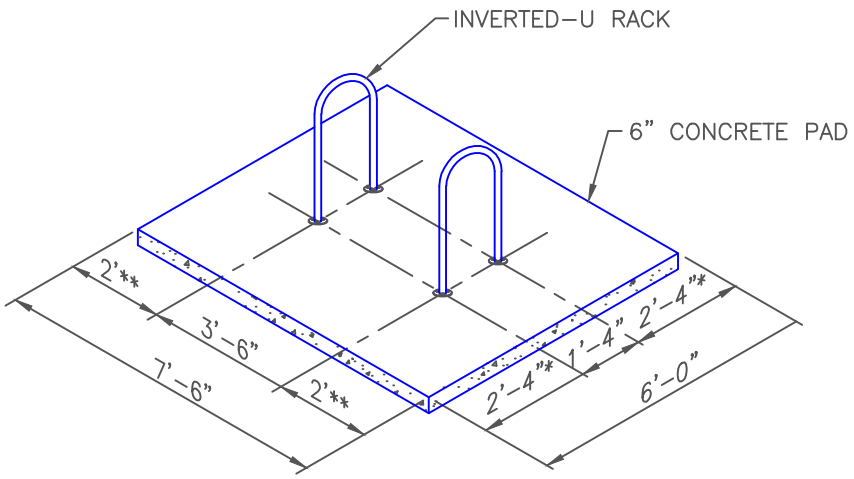

SIDE-BY-SIDE

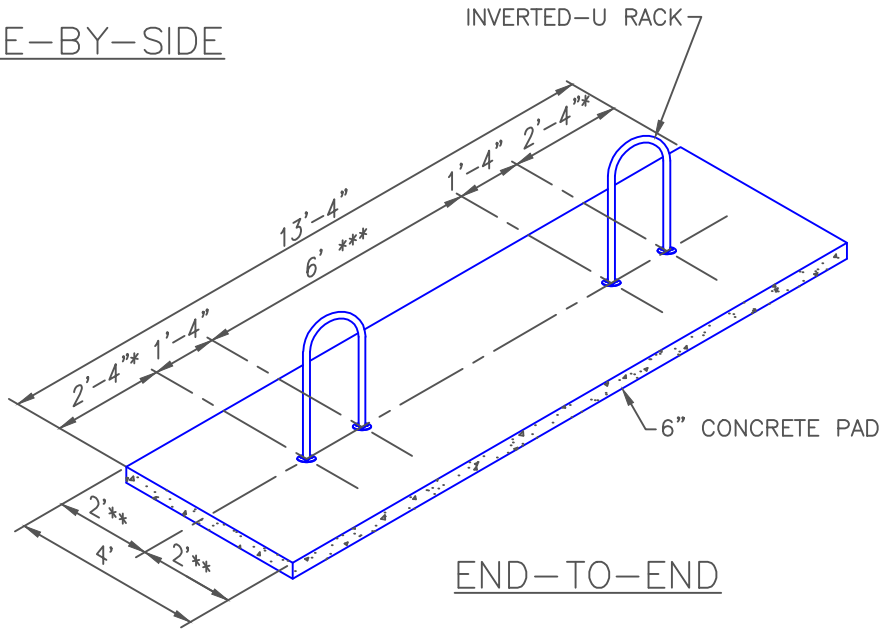

END-TO-END

DRAWN BY: JSH CHECKED BY: RJH APPROVED BY: DIRECTOR OF PUBLIC WORKS	CITY OF BOULDER, COLORADO INVERTED "U" BICYCLE RACKS	ISSUED: JULY 2, 1998 REVISED: OCT 6, 2009 DRAWING NO. 2.52.B